STATE	PROJECT NUMBER	SHEET NO.	TOTAL SHEETS

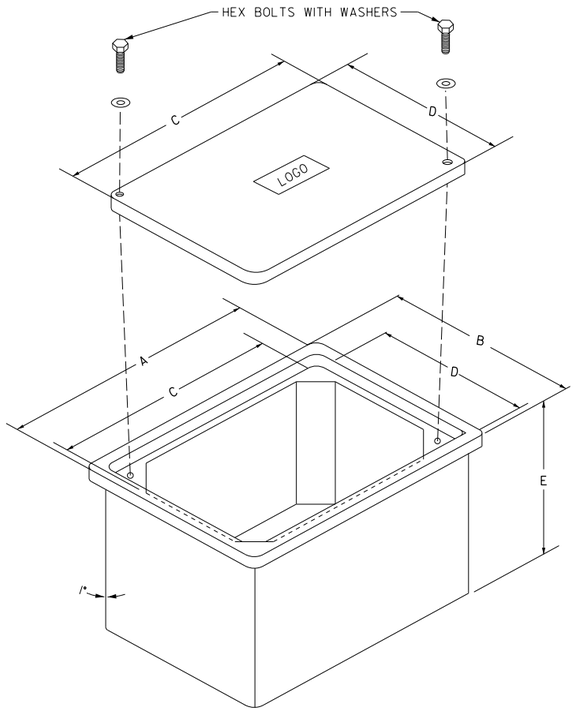

PULLBOX ASSEMBLY

PULLBOX TYPE	MINIMUM SIZE (IN.)					DIMENSION TOLERANCE FOR C & D
	A	B	C	D	E	
2	21	14	18	11	12	+/- 1"
3	33	20	30	17	12	+/- 1"
4S	38	26	36	24	18	+/- 2"
4	38	26	36	24	36	+/- 2"
5S	50	32	48	30	18	+/- 2"
5	50	32	48	30	36	+/- 2"
6	38	26	36	24	36	+/- 2"
7	50	32	48	30	36	+/- 2"

NOTES;

1. PULL BOXES TYPE 4, 4S, 5, 5S, 6 & 7 SHALL HAVE 1" (DEGREE) FLARES FOR MAXIMUM STRENGTH.
2. DESIGN PULL BOXES TO MEET OR EXCEED THE TIER LOADING SET FORTH IN SPECIFICATIONS 682 AND 924.
3. LOGO SHALL SAY "ELECTRIC", "GDOT COMMUNICATIONS OR "TRAFFIC SIGNALS", DEPENDING ON CONTENTS. LOGO SHALL BE APPROVED PRIOR TO ORDERING.
4. ELECTRICAL CABLE SHALL NOT BE SPLICED INSIDE PULLBOXES.

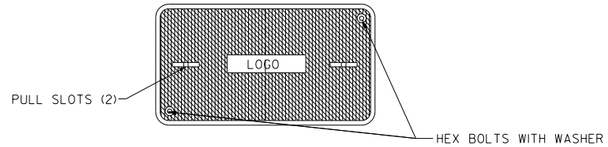

TOP VIEW

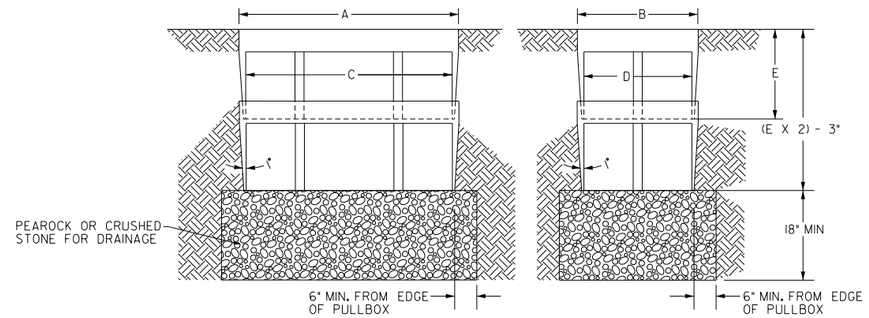

SIDE VIEW END VIEW

TYPE 4 AND 5
STACKABLE ASSEMBLY

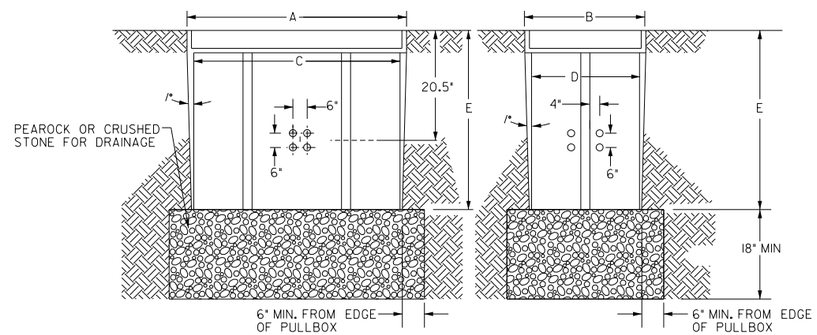

SIDE VIEW END VIEW

TYPE 6 AND 7

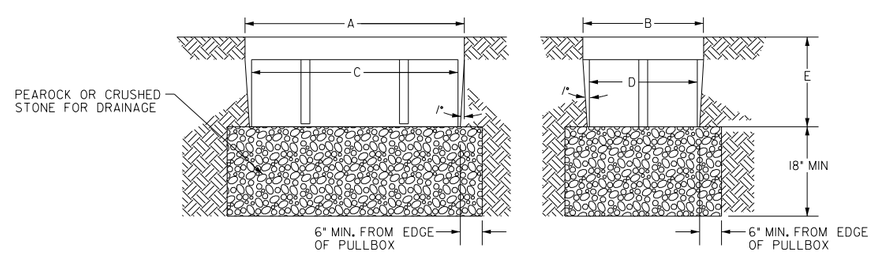

SIDE VIEW END VIEW

TYPE 2, 3, 4S AND 5S

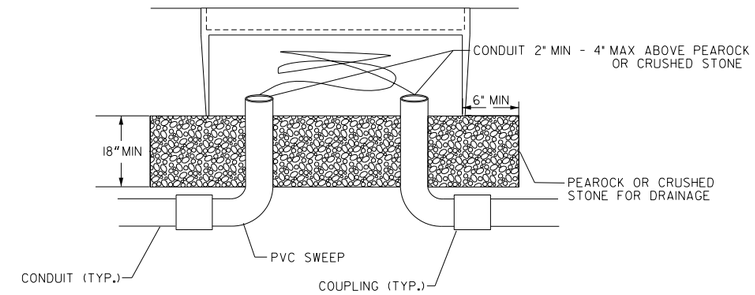

TYPICAL CONDUIT ENTRANCE DETAILS

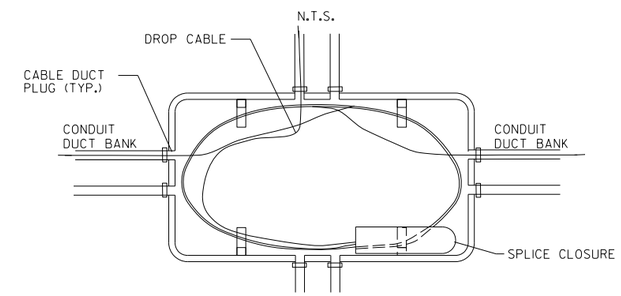

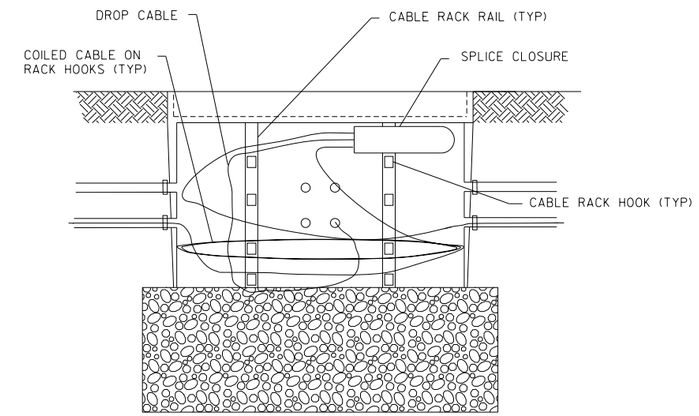

TRUNK AND DROP CABLE IN CLOSURE SHALL BE COILED TOGETHER. SEPARATE CABLES SHALL BE COILED SEPARATELY AND SUPPORTED ON SEPARATE RACK HOOKS.

CABLE MANAGEMENT DETAIL

DATE	REVISION	BY

DEPARTMENT OF TRANSPORTATION
STATE OF GEORGIA

CONSTRUCTION DETAILS

ELECTRICAL DETAIL
PULL BOX ASSEMBLY
AND INSTALLATION

JULY 2022

NO SCALE

NUMBER
ELEC-02