GDOT Georgia Department of Transportation | P. I. No.

LEVEL GRADE SINGLE INLET

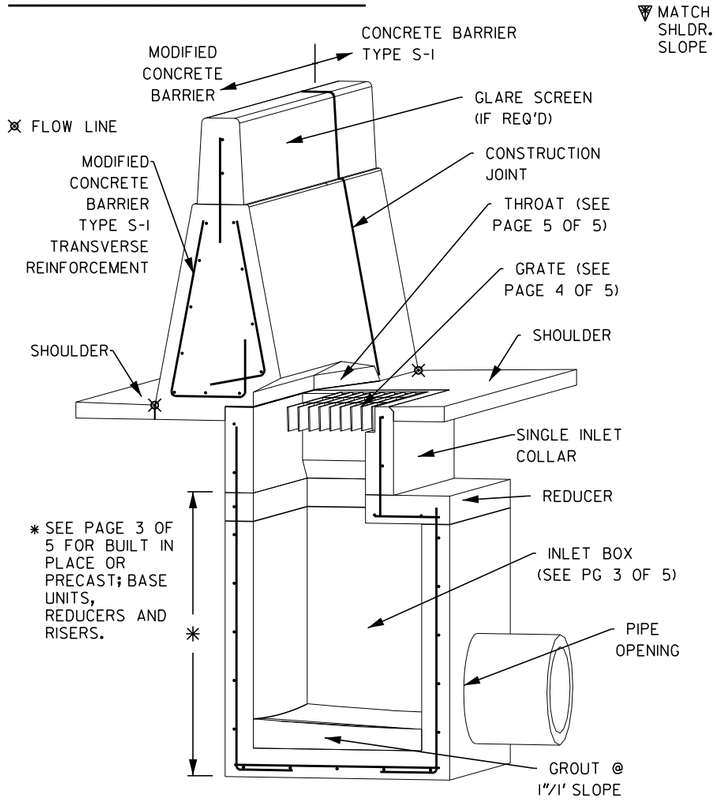

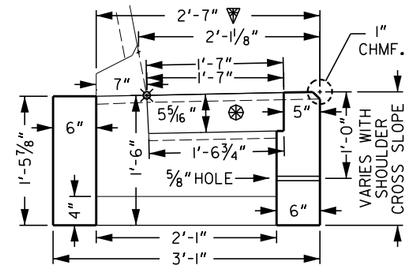

SECTION A-A

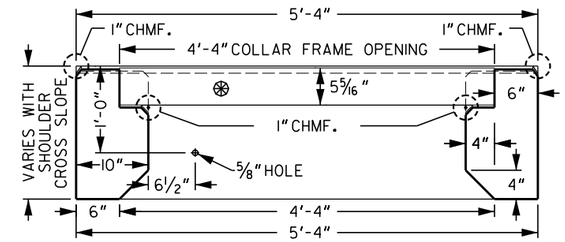

SECTION B-B

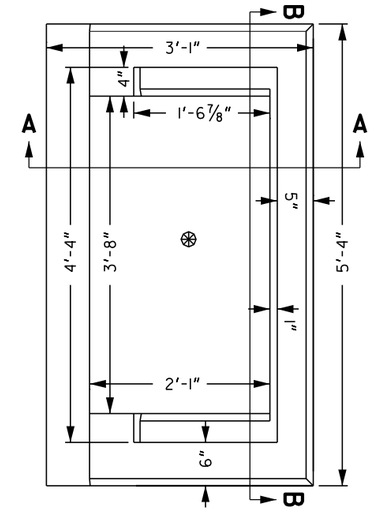

INLET COLLAR PLAN VIEW

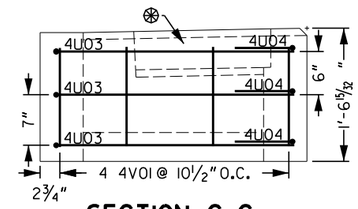

SECTION C-C

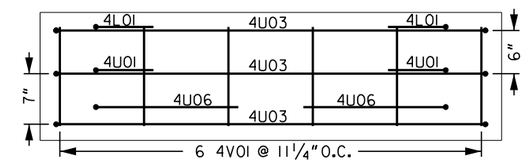

SECTION E-E

GRATE NOT SHOWN FOR CLARITY.

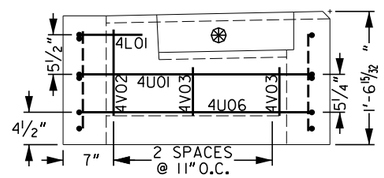

SECTION D-D

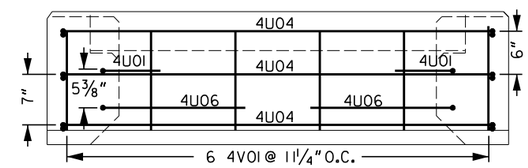

SECTION F-F

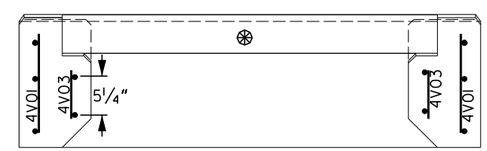

SECTION G-G

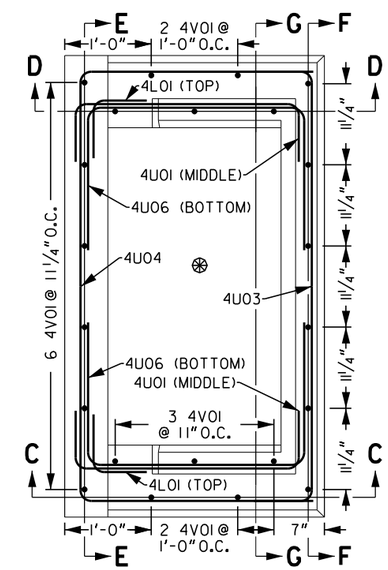

INLET COLLAR PLAN VIEW REINFORCEMENT

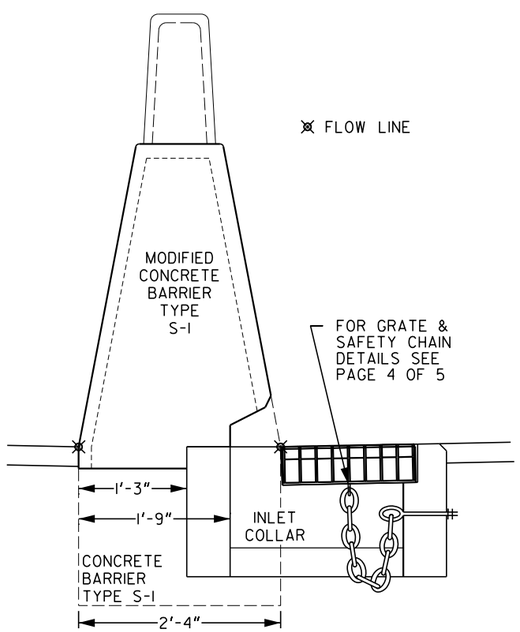

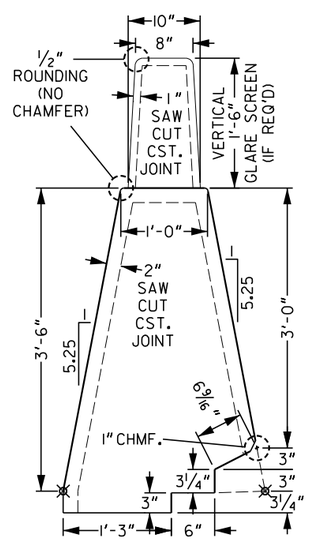

MODIFIED CONCRETE BARRIER DIMENSION DETAIL

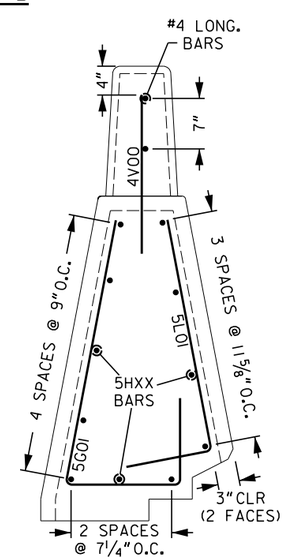

MODIFIED CONCRETE BARRIER TRANSVERSE REINFORCEMENT DETAIL (@ 6" O.C.)

				DATE	DEPARTMENT OF TRANSPORTATION STATE OF GEORGIA	
				REVISION	STANDARD NARROW MEDIAN INLET TYPE 5001-N-1 LEVEL GRADE SINGLE INLET (ADJACENT TO CONCRETE BARRIER TYPE S-1)	
					NO SCALE	APRIL 2020
				BY	DES. JAHR DRW. JAHR TRA. JAHR CHK. ____	(SUBMITTED) R Christopher Rudd STATE DESIGN POLICY ENGR. (APPROVED) Margaret B Pitts CHIEF ENGINEER	NUMBER 5001-N 1-A OF 5