Georgia Department of Transportation



2027

CONSTRUCTION STANDARDS AND DETAILS

NOTE :
ALL REFERENCES IN THIS DOCUMENT, WHICH INCLUDES ALL PAPERS, WRITINGS, DOCUMENTS, DRAWINGS, OR PHOTOGRAPHS USED, OR TO BE USED IN CONNECTION WITH THIS DOCUMENT, TO " STATE HIGHWAY DEPARTMENT OF GEORGIA ", " STATE HIGHWAY DEPARTMENT ", " GEORGIA STATE HIGHWAY DEPARTMENT ", " HIGHWAY DEPARTMENT ", OR " DEPARTMENT " WHEN THE CONTEXT THEREOF MEANS THE STATE HIGHWAY DEPARTMENT OF GEORGIA, AND SHALL BE DEEMED TO MEAN THE DEPARTMENT OF TRANSPORTATION.

FIRST USE LETTING DATE: JANUARY 2027

RECOMMENDED FOR APPROVAL BY: Daniel G. Pass
STATE DESIGN POLICY ENGINEER

JULY 1, 2026 Margaret B Pitts
CHIEF ENGINEER

ALL UNITS U.S. CUSTOMARY UNLESS OTHERWISE NOTED
ALL DRAWINGS ARE NOT TO SCALE REGARDLESS OF SCALE SHOWN

THIS PUBLICATION OF CONSTRUCTION STANDARDS AND DETAILS IS PROVIDED AS INFORMATION ONLY, IS NOT GUARANTEED, AND DOES NOT BIND THE DEPARTMENT OF TRANSPORTATION IN ANY WAY. THE ATTENTION OF BIDDER IS SPECIFICALLY DIRECTED TO SUBSECTIONS 102.04, 102.05, AND 104.03 OF THE SPECIFICATIONS.

REVISED: OCTOBER 1, 2026

DRAWING UPDATED	DRAWING REVISION DATE	PUBLISHED DATE	CHANGE DESCRIPTION
9017R	7-1-26	7-1-26	STANDARD REMOVED
G-02	7-1-26	7-1-26	DETAIL REMOVED
1122-1	7-1-26	7-1-26	ADDED T2 ALUMINIZED STEEL AS AN ALTERNATIVE TO GALVANIZED STEEL AND REVISED P.E. TO THERMOPLASTIC
1122-2	7-1-26	7-1-26	ADDED T2 ALUMINIZED STEEL AS AN ALTERNATIVE TO GALVANIZED STEEL AND REVISED 3" SCH. 40 PIPE COATING
4000W	7-1-26	7-1-26	ADDED PREFERRED CHANNEL CROSS SECTIONS, UPDATED CLEAR ZONE DISTANCES PER RDG ERRATA,
			MISCELLANEOUS UPDATES TO TABLE RANGES BASED ON RDG EXAMPLES, AND MISCELLANEOUS UPDATES FOR CLARIFICATION
4380	7-1-26	7-1-26	REMOVED RECTANGULAR WASHERS (AT ANCHOR POST)
4383	7-1-26	7-1-26	ADDED WELD TO STEEL BEARING PLATE AND ANCHOR PLATE, REMOVED RECTANGULAR WASHERS AT ANCHOR POST,
			ADDED OPTION FOR 8" x 8" W/O TACK WELDED 1" x 8" PLATE
4384	7-1-26	7-1-26	REVISED PAY LIMITS FOR TYPE 12A TERMINAL, LABELED 12B AND 12C TERMINALS AS "FOR MAINTENANCE REPAIRS ONLY"
			REPLACED TYPE 12A TERMINAL IMPACT HEAD WITH A TYPE 12A TERMINAL IMPACT HEAD "FOOTPRINT"
4391	7-1-26	7-1-26	REVISED GUARDRAIL OFFSET FROM FACE OF CURB IN SECTION F-F FROM [6"] TO [0" TO 6"] , INCREASED WIDTH OF BRIDGE SIDEWALK TO
			MATCH GDOT BRIDGE AND STRUCTURES DESIGN MANUAL, REVISED DIMENSIONS IN SECTION A-A, REVISED GUARDRAIL LAYOUT IN
			"GUARDRAIL LOCATION AT BRIDGE WITH SIDEWALK" DETAIL
9017J	7-1-26	7-1-26	ADDED RIP RAP ALL AROUND OUTLET APRON
9025A	7-1-26	7-1-26	UPDATED CONCRETE MEDIAN LAYOUT, MISCELLANEOUS UPDATES TO CONFORM WITH OTHER GDOT STANDARDS AND DETAILS
9054A	7-1-26	7-1-26	REMOVED "G" FROM SIGN POST AND STUB POST DETAIL
D-09	7-1-26	7-1-26	REMOVED SAND CEMENT BAGS, ADDED RIP RAP ALL AROUND OUTLET APRON
D-19, D-20, D-22A, D-22B, D-24A, D-24B, D-24C, D-35, D-38, D-41, D-42, D-43, D-44, D-45, D-46, D-47, D-50, D-51, D-52, D-53, D-54, D-55A, D-55B	7-1-26	7-1-26	ADDED DRAWING NUMBER 56-_ _ _ _ TO TITLE BLOCK
D-24D	7-1-26	7-1-26	ADDED EQUIVALENT BMP NOTES 6 AND 7, MINOR REVISION TO NOTE 4D, ADDED DRAWING NUMBER 56-_ _ _ _ TO TITLE BLOCK
D-56	7-1-26	7-1-26	ADDED EQUIVALENT BMP NOTE, ADDED DRAWING NUMBER 56-_ _ _ _ TO TITLE BLOCK
EC-L1	7-1-26	7-1-26	ADDED EQUIVALENT BMP NOTE 3, UPDATED SHEET BORDER
EC-L2	7-1-26	7-1-26	ADDED EQUIVALENT BMP NOTE TO Cd-F - FABRIC CHECK DAMS, UPDATED REQUIREMENTS FOR USE OF SANDBAG CHECK DAMS (Cd-S),
			ADDED EQUIVALENT BMP NOTE 3, UPDATED SHEET BORDER
EC-L3	7-1-26	7-1-26	ADDED EQUIVALENT BMP NOTE 3, UPDATED SHEET BORDER
EC-L4	7-1-26	7-1-26	ADDED EQUIVALENT BMP NOTE 3, UPDATED SHEET BORDER
EC-L5	7-1-26	7-1-26	ADDED EQUIVALENT BMP NOTE 3, UPDATED SHEET BORDER
EC-L6	7-1-26	7-1-26	ADDED EQUIVALENT BMP NOTE 3, UPDATED SHEET BORDER
EC-L7	7-1-26	7-1-26	ADDED EQUIVALENT BMP NOTE 3, UPDATED SHEET BORDER
G-11	7-1-26	7-1-26	UPDATED IMPACT ATTENUATOR LENGTHS TABLE TO REFLECT CURRENT QPL OPTIONS, UPDATED TRAFFIC FLOW DESIGNATIONS (WITH
			TRANSITION DEFLECTOR PANEL), ADDED GENERAL NOTES 11 AND 12
RA-02	7-1-26	7-1-26	REVISED NOTES AND DETAILS FOR RAISED LANE DIVIDERS, REVISED TRUCK APRON CONCRETE TYPE, REVISED CENTRAL ISLAND SLOPES,
			ADDED GENERAL NOTES 12 AND 13, MISCELLANEOUS UPDATES
RA-03	7-1-26	7-1-26	REVISED TRUCK APRON CONCRETE TYPE, REVISED CENTRAL ISLAND SLOPES, ADDED GENERAL NOTES 14 AND 15
T-27A	7-1-26	7-1-26	UPDATED R10-25 AND W16-7P SIZES TO COMPLY WITH 11TH EDITION OF MUTCD
T-27B	7-1-26	7-1-26	UPDATED R10-25 AND W16-7P SIZES TO COMPLY WITH 11TH EDITION OF MUTCD

Georgia Department of Transportation

CHANGE DATE
7-1-26
10-1-26

CHANGE REPORT SUMMARY

DRAWING No.
CR-00-01

GPLN-CE

DRAWING UPDATED	DRAWING REVISION DATE	PUBLISHED DATE	CHANGE DESCRIPTION
T-27C	7-1-26	7-1-26	UPDATED R10-25 AND W16-7P SIZES TO COMPLY WITH 11TH EDITION OF MUTCD
T-27D	7-1-26	7-1-26	UPDATED R10-25 AND W16-7P SIZES TO COMPLY WITH 11TH EDITION OF MUTCD
T-27E	7-1-26	7-1-26	UPDATED R10-25 AND W16-7P SIZES TO COMPLY WITH 11TH EDITION OF MUTCD
T-27F	7-1-26	7-1-26	UPDATED R10-25 AND W16-7P SIZES TO COMPLY WITH 11TH EDITION OF MUTCD
T-27G	7-1-26	7-1-26	UPDATED R10-25 AND W16-7P SIZES TO COMPLY WITH 11TH EDITION OF MUTCD
T-27H	7-1-26	7-1-26	UPDATED R10-25 AND W16-7P SIZES TO COMPLY WITH 11TH EDITION OF MUTCD

Georgia Department of Transportation

CHANGE DATE		
7-1-26		

CHANGE REPORT SUMMARY

DRAWING No.
CR-00-02

GPLN-CE

ver. 26.7.1

CONSTRUCTION STANDARDS INDEX

NUMBER	TITLE	REVISED
SERIES 1000: DRAINAGE		
1001B	PIPE CULVERT CONCRETE HEADWALL	Aug-99
1004A	RUBBLE MASONRY HEADWALLS FOR PIPE CULVERTS	Aug-99
1010	CATCH BASINS WITH CAST IRON GRATE INLETS	Sep-99
1011A	BRICK MANHOLES	Oct-81
1011AP	PRECAST REINFORCED CONCRETE MANHOLE	Jun-75
1013	CATCH BASINS WITH CASTINGS / REINFORCED CONCRETE BASIN WITH HOOD-TYPE A	Aug-99
1017	PIPE ARCH CULVERTS 18" TO 72" SPAN CONCRETE ENDWALLS	Aug-99
1018B	SAND CEMENT BAG RIP RAP FOR ENDWALL AND APRON	May-76
1019A	DROP INLETS (BUILT-IN-PLACE)	Aug-99
1019AP	PRECAST DROP INLETS	Aug-99
1019B	DROP INLET TYPES V-1 AND V-2	Aug-99
1029A	RIP RAP FOR STRUCTURAL PLATE PIPE AND PIPE-ARCH CULVERTS	Feb-66
1030D1	CONCRETE AND METAL PIPE CULVERTS (SHEET 1 OF 3) (TRENCH CONSTRUCTION, BEDDING, BACKFILLING)	Sep-01
1030D2	CONCRETE AND METAL PIPE CULVERTS (SHEET 2 OF 3) (FILL HEIGHTS FOR CONCRETE & CORRUGATED METAL PIPE)	Sep-01
1030D3	CONCRETE AND METAL PIPE CULVERTS (SHEET 3 OF 3) (FILL HEIGHTS FOR SPIRAL RIB METAL PIPE & FOR PIPE ARCH)	Sep-01
1030P	THERMOPLASTIC PIPE	Nov-19
1033B	PRECAST OR BUILT IN PLACE CATCH BASINS (MAX. PIPE CONN. - 18" MAY BE USED IN 4 FT. MEDIAN)	Feb-98
1033D	CATCH BASINS FOR USE WITH CURB (6" HT. OR 8" HT) & GUTTER	Aug-82
1033DP	PRECAST CATCH BASINS FOR USE WITH CURB (6" OR 8" HT.) & GUTTER	Sep-82
1033E	CATCH BASINS FOR USE WITH CURB (4"HT) & GUTTER	Aug-82
1033EP	PRECAST CATCH BASINS FOR USE WITH CURB (4" HT) & GUTTER	Sep-82
1033F	CATCH BASINS FOR USE WITH HEADER OR INTEGRAL CURBS 4", 6", 8", & 10" HT.	Aug-82
1033FP	PRECAST CATCH BASINS FOR USE WITH HEADER OR INTEGRAL CURBS, 4", 6", 8", OR 10" HT.	Sep-82
1033G	CATCH BASINS FOR USE WITH CURB (6" MOUNTABLE) & GUTTER	Dec-85
1033GP	PRECAST CATCH BASINS FOR USE WITH CURB (6" MOUNTABLE) & GUTTER	Dec-85
1034D	CATCH BASINS FOR USE WITH CURB (6" OR 8" HT.) & GUTTER (IN SAGS OR LOW POINTS)	Aug-82
1034DP	PRECAST CATCH BASINS FOR USE WITH CURB (6" OR 8" HT.) & GUTTER (IN SAGS OR LOW POINTS)	Sep-82
1034E	CATCH BASINS FOR USE WITH CURB (4" HT.) & GUTTER IN SAGS OR LOW POINTS	Aug-82
1034EP	PRECAST CATCH BASINS FOR USE WITH CURB (4" HT.) & GUTTER IN SAG OR LOW POINTS	Sep-82
1034F	CATCH BASINS FOR USE WITH 4", 6", 8", OR 10" HT. HEADER OR INTEGRAL CURBS - IN SAGS OR LOW POINTS	Aug-82
1034FP	PRECAST CATCH BASINS FOR USE WITH 4", 6", 8" OR 10" HT. HEADER OR INTEGRAL CURBS - IN SAGS OR LOW POINTS	Sep-82
1034G	CATCH BASINS FOR USE WITH CURB (6" MOUNTABLE) & GUTTER (IN SAGS OR LOW POINTS)	Dec-85
1034GP	PRECAST CATCH BASINS FOR USE WITH CURB (6" MOUNTABLE) & GUTTER (IN SAGS OR LOW POINTS)	Dec-85
1035	DRAIN INLET (ELBOW TYPE AND ALTERNATES) FOR YARD DRAINS	Nov-99

1040	CIRCULAR BASE UNITS AND RISERS FOR CATCH BASINS AND DROP INLETS (CONSTRUCTION ALTERNATES)	Nov-99
1120	FLARED END SECTIONS FOR PIPES	Jun-06
1122-1	SAFETY END SECTION (METAL) (FOR SIDE DRAIN PIPE - OR FOR STORM DRAIN PIPE PARALLEL TO MAINLINE) ALTERNATE I (SHEET 1 OF 3)	Jul-26
1122-2	SAFETY END SECTION (METAL) (FOR SIDE DRAIN PIPE - OR - FOR STORM DRAIN PIPE PARALLEL TO MAINLINE) ALTERNATE 2 (SHEET 2 OF 3)	Jul-26
1122-3	SAFETY END SECTION (CONCRETE) (FOR SIDE DRAIN PIPE - OR - FOR STORM DRAIN PIPE PARALLEL TO MAINLINE) ALTERNATE 3 (SHEET 3 OF 3)	Jan-05
1125	TAPERED INLET HEADWALL - OUTLET HEADWALL (BUILT-IN-PLACE)	Oct-99
1401	PAVEMENT PATCHING DETAILS (STORM DRAIN OR UTILITY INSTALLATIONS BY OPEN CUT ACROSS EXISTING PAVEMENT)	Aug-99

SERIES 2000: CULVERTS

2010-1	CORRUGATED METAL PLATE ARCH CULVERTS SPANS 6'-0" TO 20'-0" INCLUSIVE (SHEET 1 OF 2)	Jun-98
2010-2	CORRUGATED METAL PLATE ARCH CULVERTS SPANS 6 '-0" TO 20'-0" INCLUSIVE (SHEET 2 OF 2)	Jun-98
2011B	STRUCTURAL PLATE PIPE AND PIPE ARCH CULVERTS	Oct-99
2312	DETAILS FOR EXTENDING CULVERTS	Jul-58
2317	DETAILS FOR EXTENDING CONCRETE BOX CULVERTS	Jan-66
2318	DETAILS FOR EXTENDING CONCRETE BOX CULVERTS WITH SKEWS BELOW 75 DEGREES	Jul-78
2400	INDEX OF REINFORCED CONCRETE BOX CULVERTS	Sep-17
2401-1	REINFORCED CONCRETE SINGLE BOX CULVERT (SHEET 1 OF 3)	Sep-17
2401-2A	REINFORCED CONCRETE SINGLE BOX CULVERT 4'X 3', 4'X 4', 4'X 5' AND 4'X 6' (SHEET 2-A OF 3)	Sep-17
2401-2B	REINFORCED CONCRETE SINGLE BOX CULVERT 5'X 3' AND 5'X 4' (SHEET 2-B OF 3)	Sep-17
2401-2C	REINFORCED CONCRETE SINGLE BOX CULVERT 5'X 5', 5'X 6', 5'X7' AND 5'X 8' (SHEET 2-C OF 3)	Sep-17
2401-2D	REINFORCED CONCRETE SINGLE BOX CULVERT 6'X 3' AND 6'X 4' (SHEET 2-D OF 3)	Sep-17
2401-2E	REINFORCED CONCRETE SINGLE BOX CULVERT 6'X 5', 6'X 6', 6'X 7' AND 6'8' (SHEET 2-E OF 3)	Sep-17
2401-2F	REINFORCED CONCRETE SINGLE BOX CULVERT 7'X 4' (SHEET 2-F OF 3)	Sep-17
2401-2G	REINFORCED CONCRETE SINGLE BOX CULVERT 7'X 5', 7'X 6', 7'X 7' AND 7'X 8' (SHEET 2-G OF 3)	Sep-17
2401-2H	REINFORCED CONCRETE SINGLE BOX CULVERT 8'X 4', 8'X 5' AND 8'X 6' (SHEET 2-H OF 3)	Sep-17
2401-2I	REINFORCED CONCRETE SINGLE BOX CULVERT 8'X 7', 8'X 8', 8'X 9'AND 8'X 10' (SHEET 2-I OF 3)	Sep-17
2401-2J	REINFORCED CONCRETE SINGLE BOX CULVERT 9'X 4', 9'X 5' AND 9'X 6' (SHEET 2-J OF 3)	Sep-17
2401-2K	REINFORCED CONCRETE SINGLE BOX CULVERT 9'X 7', 9'X 8', 9'X 9'AND 9'X 10' (SHEET 2-K OF 3)	Sep-17
2401-2L	REINFORCED CONCRETE SINGLE BOX CULVERT 10'X 4' (SHEET 2-L OF 3)	Sep-17
2401-2M	REINFORCED CONCRETE SINGLE BOX CULVERT 10'X 5', 10'X 6', 10'X 7' AND 10'X 8' (SHEET 2-M OF 3)	Sep-17
2401-2N	REINFORCED CONCRETE SINGLE BOX CULVERT 10'X 9', 10'X 10', 10'X 11' AND 10'X 12' (SHEET 2-N OF 3)	Sep-17
2401-3	REINFORCED CONCRETE SINGLE BOX CULVERT (SHEET 3 OF 3)	Sep-17
2402-1	REINFORCED CONCRETE DOUBLE BOX CULVERT (SHEET 1 OF 3)	Sep-17
2402-2A	REINFORCED CONCRETE DOUBLE BOX CULVERT 4'X 3', 4'X 4', 4'X 5'AND 4'X 6' (SHEET 2-A OF 3)	Sep-17
2402-2B	REINFORCED CONCRETE DOUBLE BOX CULVERT 5'X 3' AND 5'X 4' (SHEET 2-B OF 3)	Sep-17
2402-2C	REINFORCED CONCRETE DOUBLE BOX CULVERT 5'X 5', 5'X 6', 5'X 7' AND 5'X 8' (SHEET 2-C OF 3)	Sep-17
2402-2D	REINFORCED CONCRETE DOUBLEBOX CULVERT 6'X 3' AND 6'X 4' (SHEET 2-D OF 3)	Sep-17
2402-2E	REINFORCED CONCRETE DOUBLEBOX CULVERT 6'X 5', 6'X 6', 6'X 7' AND 6'X 8' (SHEET 2-E OF 3)	Sep-17
2402-2F	REINFORCED CONCRETE DOUBLEBOX CULVERT 7'X 4' (SHEET 2-F OF 3)	Sep-17
2402-2G	REINFORCED CONCRETE DOUBLEBOX CULVERT 7'X 5', 7'X 6', 7'X 7' AND 7'X 8' (SHEET 2-G OF 3)	Sep-17
2402-2H	REINFORCED CONCRETE DOUBLEBOX CULVERT 8'X 4', 8'X 5' AND 8'X 6' (SHEET 2-H OF 3)	Sep-17

2402-2I	REINFORCED CONCRETE DOUBLEBOX CULVERT 8'X 7', 8'X 8', 8'X 9' AND 8'X 10' (SHEET 2-I OF 3)	Sep-17
2402-2J	REINFORCED CONCRETE DOUBLEBOX CULVERT 9'X 4', 9'X 5' AND 9'X 6' (SHEET 2-J OF 3)	Sep-17
2402-2K	REINFORCED CONCRETE DOUBLEBOX CULVERT 9'X 7', 9'X 8', 9'X 9' AND 9'X 10' (SHEET 2-K OF 3)	Sep-17
2402-2L	REINFORCED CONCRETE DOUBLEBOX CULVERT10'X 4' (SHEET 2-L OF 3)	Sep-17
2402-2M	REINFORCED CONCRETE DOUBLEBOX CULVERT10'X 5', 10'X 6', 10'X 7' AND 10'X 8' (SHEET 2-M OF 3)	Sep-17
2402-2N	REINFORCED CONCRETE DOUBLEBOX CULVERT 10'X 9', 10'X 10', 10'X 11' AND 10'X 12' (SHEET 2-N OF 3)	Sep-17
2402-3	REINFORCED CONCRETE DOUBLEBOX CULVERT (SHEET 3 OF 3)	Sep-17
2403-1	REINFORCED CONCRETE TRIPLE BOX CULVERT (SHEET 1 OF 3)	Sep-17
2403-2A	REINFORCED CONCRETE TRIPLE BOX CULVERT 4'X 3', 4'X 4', 4'X 5' AND 4'X 6' (SHEET 2-A OF 3)	Sep-17
2403-2B	REINFORCED CONCRETE TRIPLE BOX CULVERT 5'X 3' AND 5'X 4' (SHEET 2-B OF 3)	Sep-17
2403-2C	REINFORCED CONCRETE TRIPLE BOX CULVERT 5'X 5', 5'X 6', 5'X 7' AND 5'X 8' (SHEET 2-C OF 3)	Sep-17
2403-2D	REINFORCED CONCRETE TRIPLE BOX CULVERT 6'X 3' AND 6'X 4' (SHEET 2-D OF 3)	Sep-17
2403-2E	REINFORCED CONCRETE TRIPLE BOX CULVERT 6'X 5', 6'X 6', 6'X 7' AND 6'X 8' (SHEET 2-E OF 3)	Sep-17
2403-2F	REINFORCED CONCRETE TRIPLE BOX CULVERT 7'X 4' (SHEET 2-F OF 3)	Sep-17
2403-2G	REINFORCED CONCRETE TRIPLE BOX CULVERT 7'X 5', 7'X 6', 7'X 7' AND 7'X 8' (SHEET 2-G OF 3)	Sep-17
2403-2H	REINFORCED CONCRETE TRIPLE BOX CULVERT 8'X 4', 8'X 5' AND 8'X 6' (SHEET 2-H OF 3)	Sep-17
2403-2I	REINFORCED CONCRETE TRIPLE BOX CULVERT 8'X 7', 8'X 8', 8'X 9' AND 8'X 10' (SHEET 2-I OF 3)	Sep-17
2403-2J	REINFORCED CONCRETE TRIPLE BOX CULVERT 9'X 4', 9'X 5' AND 9'X 6' (SHEET 2-J OF 3)	Sep-17
2403-2K	REINFORCED CONCRETE TRIPLE BOX CULVERT 9'X 7', 9'X 8', 9'X 9' AND 9'X 10' (SHEET 2-K OF 3)	Sep-17
2403-2L	REINFORCED CONCRETE TRIPLE BOX CULVERT 10'X 4' (SHEET 2-L OF 3)	Sep-17
2403-2M	REINFORCED CONCRETE TRIPLE BOX CULVERT 10'X 5', 10'X 6', 10'X 7' AND 10'X 8' (SHEET 2-M OF 3)	Sep-17
2403-2N	REINFORCED CONCRETE TRIPLE BOX CULVERT 10'X 9', 10'X 10', 10'X 11' AND 10'X 12' (SHEET 2-N OF 3)	Sep-17
2403-3	REINFORCED CONCRETE TRIPLE BOX CULVERT (SHEET 3 OF 3)	Sep-17
2404	REINFORCED CONCRETE WINGWALLS, TOEWALLS AND PARAPETS FOR CONCRETE BOX CULVERTS	Sep-17
2405-1	REINFORCED CONCRETE SKEWED WINGWALLS, TOEWALLS AND PARAPETS FOR 75 DEG, 60 DEG AND 45 DEG SKEWS (SHEET 1 OF 3)	Sep-17
2405-2	REINFORCED CONCRETE SKEWED WINGWALLS, TOEWALLS AND PARAPETS FOR 75 DEG, 60 DEG AND 45 DEG SKEWS (SHEET 2 OF 3)	Sep-17
2405-3	REINFORCED CONCRETE SKEWED WINGWALLS, TOEWALLS AND PARAPETS FOR 75 DEG, 60 DEG AND 45 DEG SKEWS (SHEET 3 OF 3)	Sep-17
2406-1	CONCRETE BOX CULVERT APRONS AND BAFFLES DETAIL (SHEET 1 OF 2)	Sep-17
2406-2	CONCRETE BOX CULVERT APRONS AND BAFFLES DETAIL (SHEET 2 OF 2)	Sep-17
2530P	PRECAST BOX CULVERT BARRELS 4'X 3' THRU 10' X 10' SINGLE AND MULTIPLE LINES	Jun-85
2535P	PRECAST BOX CULVERT ENDS - WINGWALLS, PARAPETS, TOEWALLS & APRONS	Mar-85

SERIES 3000: BRIDGE ITEMS

3054	END POST AND END POST GUARDRAIL ATTACHMENT DETAILS	Sep-02
3215	SQUARE PRESTRESSED CONCRETE PILES	Feb-84
3901	BAR BENDING DETAILS	Aug-69

Georgia Department of Transportation

CONSTRUCTION STANDARDS INDEX

DRAWING No.
CS-00-03

GPLN-CE

SERIES 4000: GUARDRAIL AND CONCRETE BARRIERS

4000W	GUARDRAIL WARRANT GUIDES: LENGTHS OF ADVANCEMENT; CLEAR ZONE DISTANCES; FILL HEIGHT EMBANKMENTS	Jul-26
4030	DETAILS OF GALVANIZED METAL CIRCULAR GUARDRAIL FOR PROTECTION OF R.R. SIGNALS	Jun-98
4360	REFLECTORIZED GUARDRAIL WASHERS, DELINEATOR AND ANCHORAGE NOSE STRIPING	Jul-23
4380	"W" BEAM GUARDRAIL 31" INCH GUARDRAIL HEIGHT	Jul-26
4381	POSTS AND OFFSET BLOCKS FOR "W" & "T" BEAM GUARDRAIL 31 INCH HEIGHT	Jan-16
4382	GUARDRAIL CONNECTION AT BRIDGE END OR AT CONCRETE BARRIER END FOR 31 INCH HIGH GUARDRAIL	Jan-16
4383	GUARDRAIL ANCHORAGE TYPE I 31 INCH GUARDRAIL HEIGHT	Jul-26
4384	GUARDRAIL TERMINALS, TYPE 12A, 12B, AND 12C - 31 INCH GUARDRAIL HEIGHT	Jul-26
4385	"T" BEAM GUARDRAIL CONNECTION TO 31 INCH HEIGHT "W" BEAM	Aug-11
4386	GUARDRAIL LOCATIONS IN MEDIANS, GUARDRAIL LOCATIONS AT TURNOUTS - 31 INCH GUARDRAIL HEIGHT	Jan-16
4387	GUARDRAIL LOCATION DETAILS FOR MULTI-LANE DIVIDED HIGHWAYS (WITH SHOULDERS ADJACENT TO ROADWAY) 31 INCH GUARDRAIL HEIGHT	Jan-16
4388	GUARDRAIL LOCATION DETAILS FOR UNDIVIDED HIGHWAYS AND ROADS (WITH SHOULDERS ADJACENT TO THE ROADWAY) 31 INCH GUARDRAIL HEIGHT	Jan-16
4389	GUARDRAIL LOCATION AT FIXED OBJECTS IN MEDIAN 31 INCH GUARDRAIL HEIGHT	Jan-16
4390	"W" BEAM GUARDRAIL TRANSITION 27 INCH GUARDRAIL TO 31 INCH GUARDRAIL HEIGHT	Jan-16
4391	GUARDRAIL LOCATION (ON ROADS WITH CURB & GUTTER, HEADER CURB OR INTEGRAL CURB) 31 INCH GUARDRAIL	Jul-26
4392	LOCATION OF CONTINUOUS DOUBLE FACED GUARDRAIL IN MEDIAN 31 INCH GUARDRAIL HEIGHT	Jan-16
4941A	TYPE S-1, S-2 AND S-3 CONCRETE MEDIAN BARRIER AND CONCRETE GLARE SCREEN	May-20
4941B	CONCRETE MEDIAN BARRIER TYPES S-3A AND S-3B	May-20
4949B	CONCRETE SIDE BARRIER TYPES 2-S, 2-SA, 2-SB AND 2-SC	May-20
4949C	CONCRETE SIDE BARRIER TYPES 6-S, 6-SA, 6-SB AND 6-SC	May-20
4949D	PARAPET RETAINING WALL TYPES P1, P2, AND P3	May-20
4960	TEMPORARY BARRIER (END TREATMENT OPTIONS)	May-07
4961	DETAILS OF PRECAST TEMPORARY BARRIERS	Sep-06

SERIES 5000: INLETS AND JOINT DETAILS

5001M-1	DROP INLET TYPES M-1 AND M-2 - ADJACENT TO CONCRETE BARRIER (SHEET 1 OF 2)	Jul-25
5001M-2	DROP INLET TYPES M-1 AND M-2 - ADJACENT TO CONCRETE BARRIER (SHEET 2 OF 2)	Jul-25
5001N-1-A	NARROW MEDIAN INLET - TYPE 5001-N-1 LEVEL GRADE SINGLE INLET (ADJACENT TO CONCRETE BARRIER TYPE S-1) (SHEET 1-A OF 5)	Apr-20
5001N-1-B	NARROW MEDIAN INLET - TYPE 5001-N-2 LEVEL GRADE DOUBLE INLET (ADJACENT TO CONCRETE BARRIER TYPE S-1) (SHEET 1-B OF 5)	Apr-20
5001N-1-C	NARROW MEDIAN INLET - TYPE 5001-N-3 INDEPENDENT GRADE SINGLE BOTTOM INLET (ADJACENT TO CONRETE BARRIER TYPE S-2 OR S-3) (SHEET 1-C OF 5)	Apr-20
5001N-1-D	NARROW MEDIAN INLET - TYPE 5001-N-4 INDEPENDENT GRADE SINGLE TOP INLET (ADJACENT TO CONRETE BARRIER TYPE S-2 OR S-3) (SHEET 1-D OF 5)	Apr-20
5001N-1-E	NARROW MEDIAN INLET - TYPE 5001-N-5 INDEPENDENT GRADE DOUBLE INLET (ADJACENT TO CONRETE BARRIER TYPE S-2 OR S-3) (SHEET 1-E OF 5)	Apr-20
5001N-2	NARROW MEDIAN INLET - ISOMETRIC VIEW AND REBAR DETAIL FOR NARROW INLET COLLARS (SHEET 2 OF 5)	Apr-20
5001N-3	NARRROW MEDIAN INLET - INLET BOX AND REDUCER SLAB DETAILS (SHEET 3 OF 5)	Apr-20
5001N-4	NARROW MEDIAN INLET - REBAR SCHEDULE, GRATE, SAFETY CHAIN AND STEEL LADDER BAR STEPS DETAILS (SHEET 4 OF 5)	Jul-25
5001N-5	NARROW MEDIAN INLET - GENERAL NOTES, MODIFIED BARRIER THROAT AND LONGITUDINAL REINFORCEMENT DETAILS (SHEET 5 OF 5)	Apr-20
5046H	JOINT DETAILS FOR PORTLAND CEMENT CONCRETE PAVING	Jan-18

SERIES 9000: MISC - ITEMS: DRAIN STRUCTURES; MARKERS; SIGNS; APPROACH SLABS; TRAFFIC CONTROL; RAILROAD

9003	DETAILS OF MARKERS - FEDERAL AID AND STATE RIGHT OF WAY MARKERS	Apr-06
9013	CONCRETE SPILLWAYS (TYPICAL USE: ALONG ROADWAY AT END OF CURB)	Feb-81
9017C	CATCH BASIN (PRECAST OR BUILT-IN-PLACE) ADJACENT TO APPROACH SLAB	Jun-85
9017J	CONCRETE SPILLWAYS (ADJACENT TO APPROACH SLABS)	Jul-26
9017K	REINFORCED CONCRETE APPROACH SLAB - 30 FT. LENGTH (TYPICAL USE: CURB OR CURB & GUTTER ADJACENT TO ROADWAY AND/OR SIDEWALK ACROSS BRIDGE)	Jun-85
9017L	REINFORCED CONCRETE APPROACH SLAB - 20 FT. LENGTH (TYPICAL USE: CURB OR CURB & GUTTER ADJACENT TO ROADWAY AND/OR SIDEWALK ACROSS BRIDGE)	Jun-85
9017M	REINFORCED CONCRETE APPROACH SLAB 30 FT. LENGTH (WITH CONCRETE BARRIER)	Jun-93
9017N	REINFORCED CONCRETE APPROACH SLAB 20 FT. LENGTH (WITH CONCRETE BARRIER)	Jun-93
9017P	REINFORCED CONCRETE APPROACH SLAB 30 FT. LENGTH (TYPICAL USE: WHERE SHOULDER IS ADJACENT TO ROADWAY AND/OR BRIDGE)	Sep-02
9017Q	REINFORCED CONCRETE APPROACH SLAB 20 FT. LENGTH (TYPICAL USE: WHERE SHOULDER IS ADJACENT TO ROADWAY AND/OR ACROSS BRIDGE)	Feb-90
~~9017R~~	~~REINFORCED CONCRETE APPROACH SLAB W/ASPHALT INLAY 30 FT. LENGTH (TYPICAL USE: WHERE SHOULDER IS ADJACENT TO ROADWAY AND/OR BRIDGE)~~ STANDARD REMOVED	Sep-02
9021A	RAILROAD GRADE CROSSING PAVING (& SIGNAL CONDUIT LOCATIONS)	Sep-16
9022A	RAILROAD GRADE CROSSING GATES AND CANTILEVERS	Nov-94
9025A	RAILROAD CROSSING AT HIGHWAY WITH A 14 FT. CENTER LANE	Jul-26
9029B	PERFORATED UNDERDRAIN	Aug-83
9030C	DELINEATORS & MARKERS AND ALTERNATE POSTS	Jul-22
9031G	GROUTED RUBBLE SPILLWAYS (OR APRONS)	Feb-66
9031H	DETAIL FOR PLUGGING DRILLED WELL, STATIONING OF CONCRETE PAVEMENT, CONCRETE SLAB WELL COVER, DETAIL OF TURNOUTS - RURAL	Oct-87
9031L	GRAVITY WALL TYPICAL SECTIONS, RAISING HEADWALL, AND TYPICAL PIPE PLUG (SHEET 1 OF 2)	Sep-16
9031L-2	DETAILS OF: CATCH BASIN MODIFIED FOR DOUBLE GRATE, DROP INLET MODIFIED FOR DOUBLE GRATE, CONCRETE SPRING BOX, CONCRETE STEPS, CATCH BASIN OR DROP INLET CONNECTION TO CONCRETE BOX CULVERT CAPPING EXISTING DROP INLET (SHEET 2 OF 2)	Jun-98
9031N	CHAIN LINK WIRE FENCE	Aug-85
9031R	PLACING ROOF DRAIN PIPE UNDER SIDEWALK - RAMP TYPE BARRICADE - PIPE HANDRAIL FOR RETAINING WALL - PIPE HANDRAIL FOR CONCRETE STEPS	Oct-88
9031S	MEDIAN DROP INLET (PRECAST OR BUILT-IN-PLACE) & CONCRETE APRON	Apr-96
9031T	ISOMETRIC VIEW OF SIDE ROAD OR DRIVE FLARE DETAILS AT BRIDGE ENDS	Aug-95
9031U	JUNCTION BOXES (PRECAST OR BUILT-IN-PLACE) PIPE COLLARS, PIPE ELBOW & PIPE CURVED ALIGNMENT	Jul-85
9032B	CONCRETE CURB & GUTTER, CONCRETE CURBS, CONCRETE MEDIANS	Jul-25
9033	MILEPOSTS	Mar-06
9037	TYPICAL FILL DETAIL AT END OF BRIDGE	Sep-99
9039	PERMANENT TIMBER TYPE BARRICADE	Mar-06
9041	ASSEMBLY DETAILS ON ALUMINUM BOLTED EXTRUDED PANELS (FOR SPECIAL ROADSIDE SIGNS)	Aug-93
9042	ALUMINUM BOLTED EXTRUDED PANELS ASSEMBLY COMPONENTS DETAILS (FOR SPECIAL ROADSIDE SIGNS)	Sep-66
9046A	EARTH SPUR DIKE	Sep-99
9054A	ERECTION AND FOUNDATION DETAILS FOR SPECIAL ROADSIDE SIGNS - BREAKAWAY POST	Jul-26
9054B	ERECTION AND FOUNDATION DETAILS FOR SPECIAL ROADSIDE SIGNS - BREAKAWAY TYPE POSTS	Mar-87
9054C	ERECTION AND FOUNDATION DETAILS FOR SPECIAL ROADSIDE SIGNS - BREAKAWAY TYPE POSTS	Oct-81
9055	ERECTION AND FOUNDATION DETAILS FOR SPECIAL ROADSIDE SIGNS - BREAKAWAY TYPE POSTS (WOOD) (TO BE USED ONLY WHERE SPECIFIED)	Jun-83
9100	TRAFFIC CONTROL GENERAL NOTES, STANDARD LEGEND, MISCELLANEOUS DETAILS	Mar-06
9102	TRAFFIC CONTROL DETAIL FOR LANE CLOSURE ON TWO-LANE HIGHWAY	Mar-06

9106	TRAFFIC CONTROL DETAIL FOR LANE CLOSURE ON MULTI-LANE DIVIDED HIGHWAY	Sep-07
9107	TRAFFIC CONTROL DETAIL FOR LANE CLOSURE ON MULTI-LANE UNDIVIDED HIGHWAY	Mar-06
9108	TRAFFIC CONTROL DETAIL - TYPICAL BY-PASS DETOUR FOR 2-LANE HIGHWAY	Mar-06
9109	TRAFFIC CONTROL DETAILS - TYPICAL DETOUR ACROSS MEDIAN	Mar-06
9110	DETAIL FOR OVERSIZE TRUCK DETOUR IN CONSTRUCTION AREAS	Nov-99
9121	TAPERS, SIGNS, AND MARKINGS FOR PASSING LANES	Jul-24

Georgia Department of Transportation

CONSTRUCTION STANDARDS INDEX

DRAWING No.

CS-00-06

GPLN-CE

ver. 26.7.1

CONSTRUCTION DETAILS INDEX

NUMBER	TITLE	REVISED
ADA DETAILS		
A-01	DRIVEWAYS WITH TAPERED ENTRANCES-CONCRETE VALLEY GUTTERS	Jul-11
A-02	CONCRETE VALLEY GUTTER AT STREET INTERSECTION; 6" OR 8" CONCRETE VALLEY GUTTER AT DRIVE; PLACING PAVEMENT ADJACENT TO GUTTER; ADDITIONAL PAVING AT STREET INTERSECTION; 4' CORRUGATED CONCRETE MEDIAN	Jul-11
A-03	CONCRETE SIDEWALK DETAILS; CURB CUT (WHEELCHAIR) RAMPS	Jul-25
A-04	DETECTABLE WARNING SURFACE; TRUNCATED DOME SIZE; SPACING AND ALIGNMENT REQUIREMENTS	Jun-09
DRAINAGE AND EROSION CONTROLS		
D-01	MEDIAN DRAIN DROP INLETS	Feb-88
D-03	MEDIAN DROP INLET SPECIAL DESIGN (FOR USE IN LOW POINT IN MEDIAN WHERE OUTFALL IS NOT SUFFICIENT TO USE NORMAL DROP INLET)	Feb-74
D-04	DITCH DROP INLET WITH FABRICATED SAFETY GRATE AND WEIR OPENINGS	Oct-00
D-05	HEADWALLS - SAFETY INLETS WITH GRATES	Jun-95
D-06	FABRICATION DETAILS FOR SAFETY GRATES (ALL KINDS AND SIZES)	Oct-72
D-07	BERM DITCHES, SIDE DITCHES, SURFACE DITCHES	Jul-80
D-08	INLET DRAINAGE STRUCTURE AT SURFACE DITCHES	May-76
D-09	CONCRETE FLUMES TYPES "A" & "B"	Jul-26
D-10	4" CONCRETE DITCH PAVING - DETAILS & QUANTITIES	Jan-88
D-14	DROP - TAPERED INLETS	Jun-77
D-15	TYPICAL SKEWED CULVERT ENDS	Dec-83
D-18	REINFORCED CONCRETE SADDLE FOR PIPE CULVERTS	Jun-76
D-19	TEMPORARY PIPE SLOPE DRAIN WITH DRAIN INLET	Jul-26
D-20	SILT CONTROL GATES FOR STRUCTURES TYPE - 1, 2, AND 3	Jul-26
D-22A	TEMPORARY SEDIMENT BASIN (SHEET 1 OF 2)	Jul-26
D-22B	TEMPORARY SEDIMENT BASIN (SHEET 2 OF 2)	Jul-26
D-24A	TEMPORARY SILT FENCE (SHEET 1 OF 4)	Jul-26
D-24B	TEMPORARY SILT FENCE - BERM DITCH, INSTALLATION, BRUSH BARRIER (SHEET 2 OF 4)	Jul-26
D-24C	TEMPORARY SILT FENCE - J-HOOK, INLET SEDIMENT TRAPS (SHEET 3 OF 4)	Jul-26
D-24D	TEMPORARY SILT FENCE - FABRIC CHECK DAM (SHEET 4 OF 4)	Jul-26
D-27	SPECIAL DESIGN GRATE INLET FOR DRIVEWAYS	Nov-75
D-28	CIRCULAR CORRUGATED METAL BASES FOR CATCH BASINS & DROP INLETS	Dec-83

D-32	LONGITUDINAL EDGEDRAINS WITH LATERALS	Sep-78
D-33	TYPE “V” INLET; “V” GUTTER DETAILS	Aug-13
D-33B	TYPE "V" INLET; "V" GUTTER DETAILS (WITH BICYCLE-SAFE GRATE)	Jul-96
D-34	PIPE - BOX CULVERT COLLAR CONNECTIONS DETAILS	Mar-88
D-35	PERMANENT SOIL REINFORCING MAT (TURF REINFORCING MATS) INSTALLATION ON DITCHES	Jul-26
D-36	TYPES M-1 & M-3 MODIFIED STD. 5001-M DROP INLETS (FOR USE IN FRONT OF R.E. WALLS)	Jan-89
D-38	EXAMPLES OF DIVERSION CHANNELS	Jul-26
D-40	CULVERT PLUGS	Mar-08
D-41	CONSTRUCTION EXIT	Jul-26
D-42	INLET SEDIMENT TRAPS - BAFFLE BOX Sd2-B, BLOCK AND GRAVEL DROP INLET PROTECTION Sd2-Bg, GRAVEL DROP INLET PROTECTION Sd2-G	Jul-26
D-43	ROCK FILTER DAM	Jul-26
D-44	RETROFITTING STRUCTURE FOR TEMPORARY SEDIMENT FILTER - PERFORATED HALF-ROUND PIPE WITH STONE FILTER	Jul-26
D-45	RETROFITTING STRUCTURE FOR TEMPORARY SEDIMENT FILTER - SLOTTED BOARD DAM WITH STONE FILTER	Jul-26
D-46	STONE FILTER RING	Jul-26
D-47	TYPICAL DIVERSION ACROSS ROAD	Jul-26
D-48	FISH PASSAGE CULVERT CONCRETE VEINS	Nov-11
D-49	DITCH BACK OF RETAINING WALL SWALE DITCHES; RIP RAP DITCH	Feb-11
D-50	STONE FILTER BERM	Jul-26
D-51	TURBIDITY CURTAIN (SILT RETENTION BARRIER) FLOATING OR STAKED	Jul-26
D-52	BALED STRAW & COMPOST FILTER SOCK CHECK DAMS FOR EROSION CONTROL	Jul-26
D-53	ROCK OUTLET TEMPORARY SEDIMENT TRAP	Jul-26
D-54	SOD INSTALLATION	Jul-26
D-55A	RIPRAP OUTLET PROTECTION (SHEET 1 OF 2)	Jul-26
D-55B	RIPRAP OUTLET PROTECTION (SHEET 2 OF 2)	Jul-26
D-56	STONE RIPRAP & SAND BAG TEMPORARY CHECK DAMS	Jul-26

EROSION CONTROL LEGEND

EC-L1	EROSION CONTROL LEGEND - UNIFORM CODE SHEET (SHEET 1 OF 7)	Jul-26
EC-L2	EROSION CONTROL LEGEND - UNIFORM CODE SHEET (SHEET 2 OF 7)	Jul-26
EC-L3	EROSION CONTROL LEGEND - UNIFORM CODE SHEET (SHEET 3 OF 7)	Jul-26
EC-L4	EROSION CONTROL LEGEND - UNIFORM CODE SHEET (SHEET 4 OF 7)	Jul-26
EC-L5	EROSION CONTROL LEGEND - UNIFORM CODE SHEET (SHEET 5 OF 7)	Jul-26
EC-L6	EROSION CONTROL LEGEND - UNIFORM CODE SHEET (SHEET 6 OF 7)	Jul-26
EC-L7	EROSION CONTROL LEGEND - UNIFORM CODE SHEET (SHEET 7OF 7)	Jul-26

ELECTRICAL DETAILS

ELEC-02	ELECTRICAL DETAIL PULL BOX ASSEMBLY AND INSTALLATION	Jul-22

FENCING DETAILS

F-01	WOVEN WIRE FENCE	Mar-88
F-02	GATE DETAILS FOR CHAIN LINK & WOVEN WIRE FENCE	Jan-88
F-04	FIELD FENCING (FIELD FENCE WOVEN WIRE & FIELD FENCE BARBED WIRE)	Feb-88
F-05	DETAIL OF GATE TO BE USED WITH FIELD FENCE	Mar-88

GUARDRAIL & IMPACT ATTENUATORS

~~G-02~~	~~GUARDRAIL ANCHORAGE TYPE 8~~ DETAIL REMOVED	Jan-01
G-11	IMPACT ATTENUATOR UNITS - TYPE P, TYPE S	Jul-26
G-12A	GUARDRAIL TERMINAL TYPE 10-D DOUBLE FACED GUARDRAIL TERMINAL 31 INCH GUARDRAIL HEIGHT	Jan-16
G-13	GUARDRAIL AT DETOUR BRIDGE ENDS (SEE SECTION 541)	Aug-01

INTELLIGENT TRANSPORTATION SYSTEM DETAILS

ITS-01	ITS - LEGEND	Nov-20
ITS-02	ELECTRICAL COMMUNICATION BOX TYPE 5	Mar-07
ITS-03	DETAILS OF TUBULAR EXTENSION DETAIL STEEL OR ALUMINUM	Apr-16
ITS-04	DETAILS OF CCTV/VDS/IVDS ASSEMBLY AND TYPICAL ERECTION DETAIL	Mar-16
ITS-05	PLATFORM DETAILS	Jun-05
ITS-07	CONDUIT AND CONDUIT DUCT BANK TYPE 3 INSTALLATION DETAILS	Oct-06
ITS-08	UNDERBRIDGE CONDUIT DUCT BANK INSTALLATION DETAILS	Dec-06
ITS-09	CONDUIT INSTALLATION AT DRAINAGE STRUCTURES	Sep-05
ITS-10	STRUCTURE NUMBER PLACEMENT DETAIL	Dec-05
ITS-11	RADAR ASSEMBLY FOR OVERHEAD SIGN STRUCTURE	Nov-06
ITS-12	ELECTRICAL SERVICE DETAIL	Sep-05
ITS-13	HUB DETAILS – HUB	Mar-07
ITS-51A	ITS - RAMP METER INSTALLATION SINGLE LANE METER DETAILS	Nov-20

ITS-51B	ITS - RAMP METER INSTALLATION DUAL LANE METER DETAILS	Nov-20
ITS-51C	ITS - RAMP METER INSTALLATION TRIPLE LANE METER DETAILS	Nov-20
ITS-64	ITS - CABINET DETAILS	Nov-20
ITS-65	ITS - DYNAMIC MESSAGE SIGN	Nov-20

MISCELLANEOUS DETAILS

M-02	SUBBASES FOR APPROACH SLABS	Mar-06
M-03A	MEDIAN CROSSOVERS	Apr-10
M-03B	TYPE B - 32’ MEDIAN CROSSOVERS	Apr-10

NOISE WALLS

N-01A	1 OF 2 SOUND BARRIER FOUNDATION AND POST DETAILS (PAGE 1 OF 2)	Apr-15
N-01B	2 OF 2 SOUND BARRIER FOUNDATION AND POST DETAILS (PAGE 2 OF 2)	Apr-15
N-02	SOUND BARRIER DETAILS AT CONCRETE SIDE BARRIER	Aug-15
N-03	SPREAD FOOTING ALTERNATE FOR SOUND BARRIER WALL	Mar-09
N-04	SOUND BARRIER - TYPE B - INTERLOCKING STEEL PANELS	Aug-15
N-05	SOUND BARRIER - TYPE C - PRECAST CONCRETE PANELS	Aug-15

PAVEMENT DETAILS

P-01	DETAILS FOR GRINDING PAVEMENT	Sep-96
P-02	DETAILS AND GUIDELINES FOR FULL DEPTH SLAB REPLACEMENT	Jan-21
P-03	RESEALING JOINTS IN PPC CONCRETE PAVEMENT AND BRIDGE DECKS; PATCHING PPC CONCRETE PAVEMENT	Sep-88
P-07	PAVEMENT EDGE TREATMENT ASPHALT AND CONCRETE PAVEMENT	Nov-11

RAMPS

R-01	DETAIL OF EXIT RAMPS FOR INTERCHANGES (PARALLEL TYPE)	Apr-11
R-02	DETAIL OF EXIT RAMPS FOR INTERCHANGES (TAPER TYPE)	Apr-11

ROUNDABOUT DETAILS

RA-01	ROUNDABOUT LANDSCAPING DETAIL	Sep-22
RA-02	ROUNDABOUT TYPICAL SECTION - URBAN SHOULDER APPLICATIONS	Jul-26
RA-03	ROUNDABOUT TYPICAL SECTION - RURAL SHOULDER APPLICATIONS	Jul-26

RAILROAD DETAILS

RR-01	RAILROAD GRADE CROSSINGS - SIGNING AND MARKING AT CROSSING WITH RR SIGNALS AND/OR GATES	Jul-25

SHOULDER DETAILS & TYPICAL SECTION

S-04	SHOULDER PAVING AND SURFACING AT GUARDRAIL	Apr-16
S-06	TYPICAL SLOPE PAVING DETAILS	Nov-88
S-07	SERRATED SLOPE DETAIL; BENCHING DETAIL	Jun-09

TRAFFIC CONTROL DETAILS

T-01	DETAILS OF SIGN PLATES	Jan-00
T-02	DETAILS FOR TYPICAL FRAMING	Mar-00
T-03A	TYPE 7, 8 AND 9 SQUARE TUBE POST INSTALLATION DETAIL	Jul-02
T-03B	DETAILS OF SQUARE TUBE POST (BREAKAWAY SIGN SUPPORT)	Jul-02
T-03C	DETAILS OF STRAIN POLE ERECTION FOR OVERHEAD SIGNS	Jan-00
T-03D	DETAILS OF TIMBER POLE ERECTION FOR OVERHEAD SIGNS	Jan-00
T-04	DETAILS OF CARDINAL DIRECTION SIGNS	Jan-00
T-05A	DETAILS OF REGULATORY SIGNS SHEET 1 OF 2	Jan-03
T-05B	DETAILS OF REGULATORY SIGNS SHEET 2 OF 2	Jan-00
T-05C	DETAILS OF WARNING SIGNS	Jan-00
T-06	DETAILS OF OVERHEAD SIGNS	Jan-00
T-07	DETAILS OF BRIDGE ATTACHMENT	Sep-01
T-08	TRAFFIC CONTROL DETAIL FOR BRIDGE WIDENING (ONE-WAY TRAFFIC FLOW)	May-99
T-09A	DETAILS OF RIDESHARE SIGNS	Nov-99
T-09B	DETAILS OF TRUCK RESTRICTION SIGNS	Feb-00
T-11A	PAVEMENT MARKINGS & RAISED PAVEMENT MARKER PLACEMENT, CONVENTIONAL ROADWAYS	Jul-24

Georgia Department of Transportation

CONSTRUCTION DETAILS INDEX

INDEX No.
CD-00-05

T-11B	PAVEMENT MARKINGS & RAISED PAVEMENT MARKER PLACEMENT, LIMITED ACCESS ROADWAYS	Jul-24
T-12A	DETAILS OF PAVEMENT MARKING ARROW LOCATION	Jan-00
T-12B	PAVEMENT MARKINGS - ARROWS	Nov-20
T-13A	DETAILS OF PAVEMENT MARKINGS WORDS (SHEET 1 OF 3)	Nov-20
T-13B	DETAILS OF PAVEMENT MARKINGS WORDS (SHEET 2 OF 3)	Sep-16
T-13C	DETAILS OF PAVEMENT MARKING WORDS PLACEMENT (SHEET 3 OF 3)	Sep-19
T-13D	PAVEMENT MARKINGS - INTERSTATE SHIELDS AND WORDS	Sep-19
T-14	DETAIL OF PAVEMENT MARKING HATCHING	Jul-25
T-15C	DETAILS OF RAISED PAVEMENT MARKERS	Sep-11
T-16	BICYCLE LANE PAVEMENT MARKINGS	Jul-24
T-16A	DETAILS OF SHARED LANE PAVEMENT MARKING	Jul-24
T-17A	MANAGED LANE PAVEMENT MARKINGS	Jul-25
T-17B	DETAILS OF MANAGED LANE GORE AREA PAVEMENT MARKING	Jul-24
T-18	DETAILS OF HANDICAPPED PAVEMENT MARKINGS	Jan-00
T-19	RUMBLE STRIPS: ROUNDABOUTS AND STOP CONTROLLED INTERSECTIONS	Nov-20
T-20	TRAFFIC CONTROL PEDESTRIAN ACCESSIBILITY AROUND WORKZONE - SIDEWALK DIVERSION	Oct-08
T-21	TRAFFIC CONTROL PEDESTRIAN ACCESSIBILITY AROUND WORKZONE - SIDEWALK DETOUR	Oct-08
T-22	TRAFFIC CONTROL PEDESTRIAN ACCESSIBILITY AROUND WORKZONE - MIDBLOCK CROSSING AND SIDEWALK DETOUR	Oct-08
T-22A	DETAILS FOR BRIDGE DELINEATION ON DIVIDED HIGHWAYS	Sep-06
T-22B	DETAILS FOR BRIDGE DELINEATION ON DIVIDED HIGHWAYS TWO WAY OPERATION	Sep-06
T-26A	SIGNALIZED INTERSECTION WITH BIKE BOXES: BYCYCLE BOXES ON 2-LANE ROAD WITHOUT INTERSECTION MARKINGS	Jul-24
T-26B	SIGNALIZED INTERSECTION WITH BIKE BOXES: BICYCLE BOXES ON 2-LANE ROAD	Jul-24
T-26C	SIGNALIZED INTERSECTION WITH BIKE BOXES: BICYCLE BOXES ON 2-LANE ROAD WITH RIGHT-TURN ONLY LANE	Jul-24
T-26D	SIGNALIZED INTERSECTION WITH BIKE BOXES: TWO-STAGE TURN BOXES ON 2-LANE ROAD	Jul-24
T-26E	SIGNALIZED INTERSECTION WITH BIKE BOXES: TWO-STAGE TURN BOXES ON 2-LANE ROAD WITH RIGHT-TURN ONLY LANE	Jul-24
T-26F	SIGNALIZED INTERSECTION WITH BIKE BOXES: TWO-STAGE TURN BOXES ON 4-LANE ROAD	Jul-24
T-26G	SIGNALIZED INTERSECTION WITH BIKE BOXES: TWO-STAGE TURN BOXES ON 4-LANE ROAD WITH RIGHT-TURN ONLY LANE	Jul-24
T-27A	RECTANGULAR RAPID FLASHING BEACON (RRFB) PLAN: 2 LANES (WITHOUT PEDESTRIAN REFUGE ISLAND)	Jul-26
T-27B	RECTANGULAR RAPID FLASHING BEACON (RRFB) PLAN: 3 LANES (WITHOUT PEDESTRIAN REFUGE ISLAND)	Jul-26
T-27C	RECTANGULAR RAPID FLASHING BEACON (RRFB) PLAN: 3 LANES (WITH PEDESTRIAN REFUGE ISLAND)	Jul-26
T-27D	RECTANGULAR RAPID FLASHING BEACON (RRFB) PLAN: 3 LANES (WITH PEDESTRIAN REFUGE ISLAND & OFFSET CROSSWALKS)	Jul-26
T-27E	RECTANGULAR RAPID FLASHING BEACON (RRFB) PLAN: 4+ LANES (WITHOUT PEDESTRIAN REFUGE ISLAND)	Jul-26
T-27F	RECTANGULAR RAPID FLASHING BEACON (RRFB) PLAN: 4+ LANES (WITH PEDESTRIAN REFUGE ISLAND & OFFSET CROSSWALKS)	Jul-26
T-27G	RECTANGULAR RAPID FLASHING BEACON (RRFB) PLAN: 4+ LANES (WITH RAISED MEDIAN & OFFSET CROSSWALKS)	Jul-26
T-27H	RECTANGULAR RAPID FLASHING BEACON (RRFB) PLAN: NEAR SIDE STREET / DRIVEWAY	Jul-26
T-30	SHOULDER RUMBLE STRIP: FREEWAY	Jul-25
T-31	SHOULDER RUMBLE STRIP: NON-FREEWAY PLACEMENT	Jul-24
T-32	SHOULDER RUMBLE STRIP: NON-FREEWAY DETAILS	Jul-24
T-33	CENTERLINE RUMBLE STRIP PLACEMENT	Jul-24
T-34	CENTERLINE RUMBLE STRIP DETAILS	Jul-24
T-35	EDGE LINE RUMBLE STRIP: NON-FREEWAY PLACEMENT	Jul-24
T-36	EDGE LINE RUMBLE STRIP: NON-FREEWAY DETAILS	Jul-24
T-37	AUDIBLE PROFILED THERMOPLASTIC	Jul-24

Georgia Department of Transportation

CONSTRUCTION DETAILS INDEX

INDEX No.
CD-00-06

GPLN-CE

TRAFFIC SIGNAL DETAILS

TS-00	TRAFFIC SIGNALS - LEGEND	Nov-20
TS-01A	INDUCTIVE LOOP DETECTOR INSTALLATION	Nov-20
TS-01B	INDUCTIVE LOOP DETECTOR INSTALLATION	Nov-20
TS-02	PREFABRICATED CABINET BASE	Nov-20
TS-03	PEDESTRIAN FACILITIES INSTALLATION	Nov-20
TS-04A	TRAFFIC SIGNAL SUPPORT STRUCTURES	Nov-20
TS-04B	TRAFFIC SIGNAL SUPPORT STRUCTURES	Nov-20
TS-05	STRAIN POLE AND MAST ARM FOUNDATIONS	Nov-20
TS-06	GROUNDING FOR TRAFFIC SIGNAL SUPPORT STRUCTURES	Nov-20
TS-07	UTILITY CLEARANCE	Nov-20
TS-08	GUYING	Nov-20
TS-09	FIBER OPTICS INSTALLATION	Nov-20
TS-10A	FLASHING BEACON ASSEMBLY SPAN WIRE INSTALLATION	Nov-20
TS-10B	FLASHING BEACON ASSEMBLY POST MOUNTED INSTALLATION	Nov-20
TS-13	DETAILS OF COAXIAL VIDEO CABLE TERMINATION PANEL	Mar-16
TS-13A	COAXIAL BLOCK DIAGRAM/POWER TERMINATION PANEL	Mar-16
TS-13B	DETAILS OF VIDEO CAMERA SENSOR MOUNTING WITH COAXIAL VIDEO CABLE AND JUNCTION BOX	Mar-16
TS-13C	DETAILS OF VIDEO CAMERA SENSOR MOUNTING WITH COAXIAL AND ETHERNET CABLES	Mar-16

Georgia Department of Transportation

CONSTRUCTION DETAILS INDEX

INDEX No.
CD-00-07

GPLN-CE

Georgia Department of Transportation

2027

CONSTRUCTION STANDARDS

GDOT Georgia Department of Transportation | P. I. No. XXXXXXX

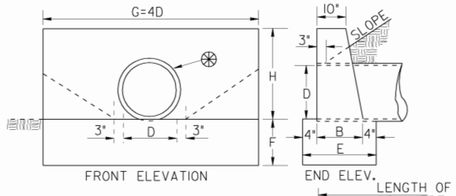

FRONT ELEVATION

END ELEV.

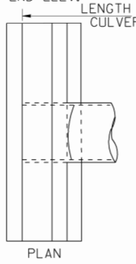

STRAIGHT WALL

PLAN

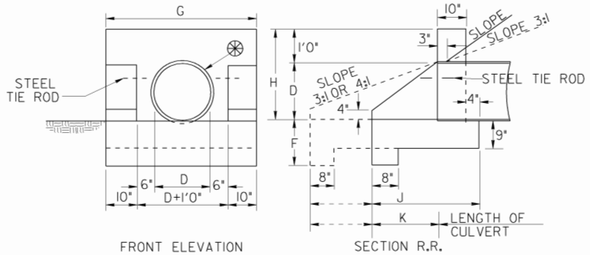

FRONT ELEVATION

SECTION R.R.

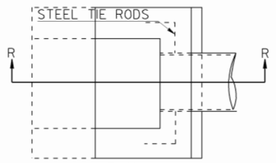

U TYPE WING

PLAN

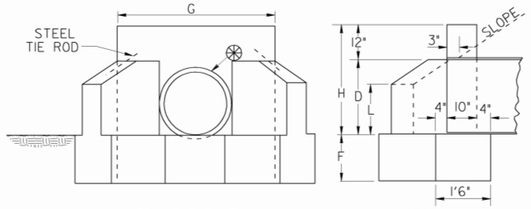

FRONT ELEVATION

SECTION N.N.

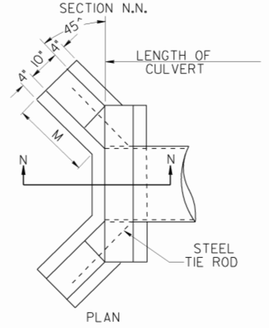

45° WINGS

PLAN

INLET BEVEL DETAIL

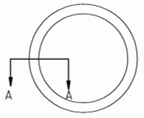

FRONT VIEW

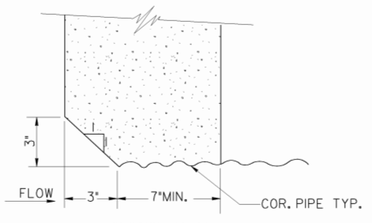

SECTION 'A-A'

METHOD OF EXTENDING PIPE AND RETAINING EXISTING HEADWALL

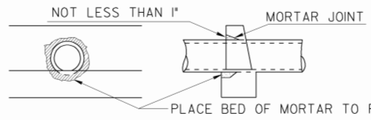

CONCRETE WITHIN THE HATCHED AREA TO BE REMOVED BY CHIPPING OR IN A MANNER APPROVED BY THE ENGINEER, FORMING A RECESS NO LESS THAN I" LARGER THAN THE OUTSIDE DIMENSION OF THE PIPE.

DIMENSIONS							QUANTITIES ONE STRAIGHT ENDWALL				CONC. IN WALL & FTG. FOR EACH ADDL. PIPE LINE
OPENING		WALL		FOOTING			CLASS "B" CONCRETE				
D	AREA SQ. FT.	G	H	B	E	F	CUBIC FEET WALL	CUBIC FEET FOOT	TOTAL CU. FT.	TOTAL CU.YD.	CU.YD.
12"	0.8	4'0"	2'0"	1'2"	1'10"	1'0"	7.2	7.3	14.5	0.54	0.25
15"	1.2	5'0"	2'3"	1'2"	1'10"	1'2"	9.9	10.7	20.6	0.76	0.36
18"	1.8	6'0"	2'6"	1'3"	1'11"	1'3"	13.6	14.4	28.0	1.04	0.48
24"	3.1	8'0"	3'0"	1'4"	2'0"	1'4"	22.3	21.3	43.6	1.62	0.74
30"	4.9	10'0"	3'6"	1'6"	2'2"	1'6"	34.7	32.5	67.2	2.49	1.13
36"	7.1	12'0"	4'0"	1'8"	2'4"	1'8"	50.5	46.7	97.2	3.60	1.62
42"	9.6	14'0"	4'6"	1'10"	2'6"	2'0"	70.3	70.0	140.3	5.20	2.13
48"	12.6	16'0"	5'0"	2'1"	2'9"	2'0"	96.9	88.0	184.9	6.85	2.58
54"	16.0	18'0"	5'6"	2'4"	3'0"	2'0"	129.4	108.0	237.4	8.79	3.07
60"	19.6	20'0"	6'0"	2'6"	3'2"	2'0"	164.6	126.7	291.3	10.79	3.53

FOR EACH ADDITIONAL PIPE LINE, ADD TO G: OD+(ID OR 3 FEET, WHICHEVER IS SMALLER)

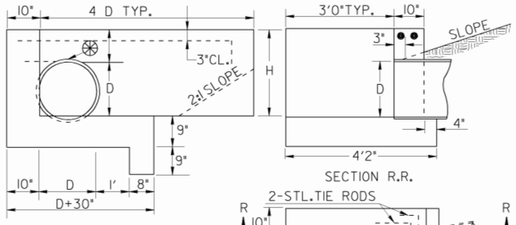

FRONT ELEVATION

SECTION R.R.

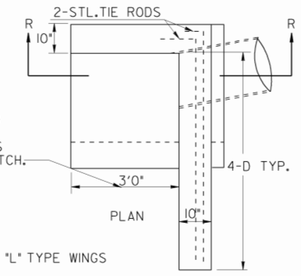

PLAN

CONCRETE ENDWALLS WITH "L" TYPE WINGS

NOTE: THE 3'-0" DIMENSION IS BASED ON DITCH SECTION 1' DEEP. VARY ACCORDING TO DITCH SECTION SO AS TO KEY 1'0" INTO BACK SLOPE OF DITCH.

NOTE: THESE QUANTITIES WILL VARY ACCORDING TO DITCH SECTION AND ARE TO BE USED FOR ESTIMATING PURPOSES ONLY. PAYMENT TO BE MADE ACCORDING TO QUANTITIES MEASURED AS ACTUALLY PLACED.

DIMENSIONS					QUANTITIES ONE "L" ENDWALL	
D	AREA SQ.FT.	H MIN.	4D TYP.	D+30 TYP.	CU. YD. CONC.	STEEL TIE RODS
15"	1.2	2'3"	5'0"	3'9"	1.08	2-¾"DIA.x5'0"
18"	1.8	2'6"	6'0"	4'0"	1.24	2-¾"DIA.x6'0"
24"	3.1	3'0"	8'0"	4'6"	1.59	2-¾"DIA.x8'0"
30"	4.9	3'6"	10'0"	5'0"	2.00	2-¾"DIA.x10'0"
36"	7.1	4'0"	12'0"	5'6"	2.46	2-¾"DIA.x12'0"
42"	9.6	4'6"	14'0"	6'0"	2.98	2-¾"DIA.x14'0"
48"	12.6	5'0"	16'0"	6'6"	3.53	2-¾"DIA.x16'0"
54"	16.0	5'6"	18'0"	7'0"	4.13	2-¾"DIA.x18'0"
60"	19.6	6'0"	20'0"	7'6"	4.85	2-¾"DIA.x20'0"

3:1 FILL SLOPES

DIMENSIONS							QUANTITIES ONE "U" ENDWALL				
OPENING		WALL			FOOTING		CLASS "B" CONCRETE				STEEL TIE RODS
D	AREA SQ.FT	G	H	K	F	J	CUBIC FEET WALL	CUBIC FEET FOOT	TOTAL CU.FT.	TOTAL CU.YD.	
2:1 FILL SLOPES											
12"	0.8	3'8"	2'0"	1'0"	1'3"	2'2"	6.6	7.3	13.9	0.52	NONE
15"	1.2	3'11"	2'3"	1'5"	1'3"	2'7"	8.3	9.1	17.4	0.64	NONE
18"	1.8	4'2"	2'6"	1'9"	1'3"	2'11"	9.9	10.7	20.6	0.76	NONE
24"	3.1	4'8"	3'0"	2'6"	1'6"	3'8"	13.9	15.5	29.4	1.09	2-¾"DIA.x2'0"
30"	4.9	5'2"	3'6"	3'3"	1'6"	4'5"	18.7	20.0	38.7	1.43	2-¾"DIA.x2'0"
36"	7.1	5'8"	4'0"	4'0"	1'9"	5'2"	21.2	26.2	50.4	1.87	2-¾"DIA.x2'0"
42"	9.6	6'2"	4'6"	4'9"	2'0"	5'11"	30.3	33.2	63.5	2.35	2-¾"DIA.x2'6"
48"	12.6	6'8"	5'0"	5'6"	2'0"	6'8"	37.3	39.6	76.9	2.85	2-¾"DIA.x3'0"
54"	16.0	7'2"	5'6"	6'3"	2'0"	7'5"	44.2	45.9	90.1	3.33	2-¾"DIA.x3'6"
60"	19.6	7'8"	6'0"	7'0"	2'0"	8'2"	51.1	49.1	100.2	3.71	2-¾"DIA.x4'0"
3:1 FILL SLOPES											
12"	0.8	3'8"	2'0"	2'0"	1'3"	3'2"	7.7	9.9	17.6	0.65	NONE
15"	1.2	3'11"	2'3"	2'9"	1'3"	3'11"	10.0	12.8	22.8	0.84	NONE
18"	1.8	4'2"	2'6"	3'6"	1'3"	4'8"	12.5	16.0	28.5	1.06	NONE
24"	3.1	4'8"	3'0"	5'0"	1'6"	6'2"	18.8	24.0	42.8	1.58	2-¾"DIA.x2'0"
30"	4.9	5'2"	3'6"	6'6"	1'6"	7'8"	26.3	32.3	58.6	2.17	2-¾"DIA.x2'0"
36"	7.1	5'8"	4'0"	8'0"	1'9"	9'2"	35.1	42.8	77.9	2.89	2-¾"DIA.x2'0"
42"	9.6	6'2"	4'6"	9'6"	2'0"	10'8"	45.4	54.5	99.9	3.70	2-¾"DIA.x2'6"
48"	12.6	6'8"	5'0"	11'0"	2'0"	12'2"	56.9	66.5	123.4	4.57	2-¾"DIA.x3'0"
54"	16.0	7'2"	5'6"	12'6"	2'0"	13'8"	66.7	79.5	146.2	5.41	2-¾"DIA.x3'6"
60"	19.6	7'8"	6'0"	13'4"	2'0"	17'2"	81.0	87.9	168.9	6.25	2-¾"DIA.x4'0"
4:1 FILL SLOPES											
12"	0.8	3'8"	2'0"	2'8"	1'3"	3'10"	8.4	11.8	20.2	0.75	NONE
15"	1.2	3'11"	2'3"	3'8"	1'3"	4'10"	11.2	15.5	26.6	0.98	NONE
18"	1.8	4'2"	2'6"	4'8"	1'3"	5'10"	14.3	19.6	33.9	1.26	NONE
24"	3.1	4'8"	3'0"	6'8"	1'6"	7'10"	22.0	29.8	51.8	1.92	2-¾"DIA.x2'0"
30"	4.9	5'2"	3'6"	8'8"	1'6"	9'10"	31.3	40.7	72.0	2.67	2-¾"DIA.x2'0"
36"	7.1	5'8"	4'0"	10'8"	1'9"	11'10"	42.5	54.1	96.6	3.58	2-¾"DIA.x2'0"
42"	9.6	6'2"	4'6"	12'8"	2'0"	13'10"	55.4	69.2	124.6	4.61	2-¾"DIA.x2'6"
48"	12.6	6'8"	5'0"	14'8"	2'0"	15'10"	70.0	84.8	154.8	5.73	2-¾"DIA.x3'0"
54"	16.0	7'2"	5'6"	16'8"	2'0"	17'10"	86.4	101.9	188.3	6.97	2-¾"DIA.x3'6"
60"	19.6	7'8"	6'0"	18'8"	2'0"	19'10"	104.7	120.5	225.2	8.34	2-¾"DIA.x4'0"

NOTE:
QUANTITIES OF CONCRETE ARE BASED ON INSIDE DIAMETER OF PIPE. NO DEDUCTIONS SHALL BE MADE FOR SHELL THICKNESS OR SKEW OF PIPE IN COMPUTING PAY QUANTITIES.

DIMENSIONS						QUANTITIES ONE ENDWALL WITH 45° WING WALLS				
OPENING		WALL			FOOTING	CLASS "B" CONCRETE				STEEL TIE RODS
D	AREA SQ. FT.	H	G	L	M	F	CUBIC FEET WALL	CUBIC FEET FOOT	TOTAL CU.FT.	TOTAL CU.YD.	
2:1 SLOPES											
18"	1.8	2'6"	3'10"	1'2"	1'7"	1'3"	9.3	10.7	20.0	0.74	NONE
24"	3.1	3'0"	4'4"	1'5"	2'1"	1'4"	13.1	14.4	27.5	1.02	2-¾"DIA.x2'0"
30"	4.9	3'6"	4'10"	1'9"	2'5"	1'6"	17.4	18.8	36.7	1.34	2-¾"DIA.x2'0"
36"	7.1	4'0"	5'4"	2'0"	2'11"	1'8"	22.6	24.6	47.2	1.75	2-¾"DIA.x3'0"
42"	9.6	4'6"	5'10"	2'3"	3'6"	2'0"	29.1	34.6	63.7	2.36	2-¾"DIA.x3'0"
48"	12.6	5'0"	6'4"	2'6"	4'0"	2'0"	35.9	39.1	75.0	2.78	2-¾"DIA.x3'0"
54"	16.0	5'6"	6'10"	2'9"	4'6¼"	2'0"	42.9	46.6	89.5	3.31	2-¾"DIA.x3'0"
60"	19.6	6'0"	7'4"	3'0"	5'0½"	2'0"	51.8	51.1	102.9	3.81	2-¾"DIA.x3'0"
3:1 SLOPES											
18"	1.8	2'6"	3'10"	1'2"	1'9"	1'3"	10.7	14.5	25.2	0.93	NONE
24"	3.1	3'0"	4'4"	1'5"	2'10"	1'4"	16.6	17.8	34.4	1.27	2-¾"DIA.x2'0"
30"	4.9	3'6"	4'10"	1'9"	3'6"	1'6"	22.9	24.4	47.3	1.71	2-¾"DIA.x2'0"
36"	7.1	4'0"	5'4"	2'1"	4'3"	1'8"	30.2	32.0	62.2	2.30	2-¾"DIA.x3'0"
42"	9.6	4'6"	5'10"	2'5"	4'11"	2'0"	38.8	44.0	82.8	3.07	2-¾"DIA.x3'0"
48"	12.6	5'0"	6'4"	2'8"	5'6"	2'0"	47.5	48.6	96.1	3.56	2-¾"DIA.x3'0"
54"	16.0	5'6"	6'10"	3'2"	6'1"	2'0"	57.0	53.4	110.4	4.09	2-¾"DIA.x3'0"
60"	19.6	6'0"	7'4"	3'6"	6'9"	2'0"	68.5	59.1	127.6	4.73	2-¾"DIA.x3'0"

SECTION SHOWING MINIMUM COVER OVER CULVERTS

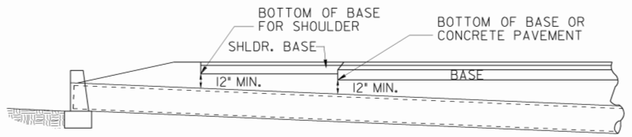

NOTE: GRADE GENERALLY TO FOLLOW SLOPE OF STREAM.

⊛ IF PIPE HAS NEITHER A GROOVE NOR A SPIGOT AT ITS INLET, AN INLET BEVEL WILL BE REQ'D.

NOTE TO DESIGNER

THIS STANDARD IS LIMITED FOR USE ONLY AT SPECIAL CONDITIONS, OTHERWISE, SEE CURRENT STANDARDS 1120 & 1125.

HEADWALLS ARE NOT TO BE PLACED INSIDE THE CLEAR ZONE.

DEPARTMENT OF TRANSPORTATION
STATE OF GEORGIA

STANDARD
PIPE CULVERT CONCRETE HEADWALL

NO SCALE

REV. & REDR. AUG. 1999

DESIGNED
TRACED
CHECKED

(SUBMITTED) STATE ROAD & AIRPORT DESIGN ENGINEER

(APPROVED) CHIEF ENGINEER

NUMBER 1001B

DATE | REVISION | BY

GDOT Georgia Department of Transportation | P. I. No. XXXXXXX

GENERAL NOTES:
HEADWALLS SHALL BE BUILT ACCORDING TO STANDARD SPECIFICATIONS FOR CEMENT RUBBLE MASONRY.

STONE SHALL BE BEDDED IN 1/3 PORTLAND CEMENT MORTAR.

HEADERS SHALL BE DISTRIBUTED THROUGH WALLS SO AS TO FORM ABOUT ONE SIXTH OF FACE OF WALL, AND SHALL EXTEND ENTIRELY THROUGH THE WALL.

WALLS SHALL BE NEATLY TOPPED WITH LAYER OF 1-1 MORTAR, AT LEAST 1" THICK, TROWELED SMOOTH, AND BEVELED AT EDGES.

DEPTH OF WALL BELOW PIPE TO BE VARIED TO SUIT LOCAL CONDITIONS.

WHERE DEPTH OF WALL IS INCREASED BY MORE THAN 2'0" USE 0.4 OF HEIGHT FOR WIDTH OF BASE.

DIMENSIONS FOR SINGLE LINE OF PIPE			
D	H	L	B
12"	4'-0"	4'-0"	1'-7"
15"	4'-3"	5'-0"	1'-8 1/4"
18"	4'-6"	6'-0"	1'-10 1/4"
24"	5'-0"	8'-0"	2'-0"
30"	5'-6"	10'-0"	2'-2 1/2"
36"	6'-0"	12'-0"	2'-5 1/2"

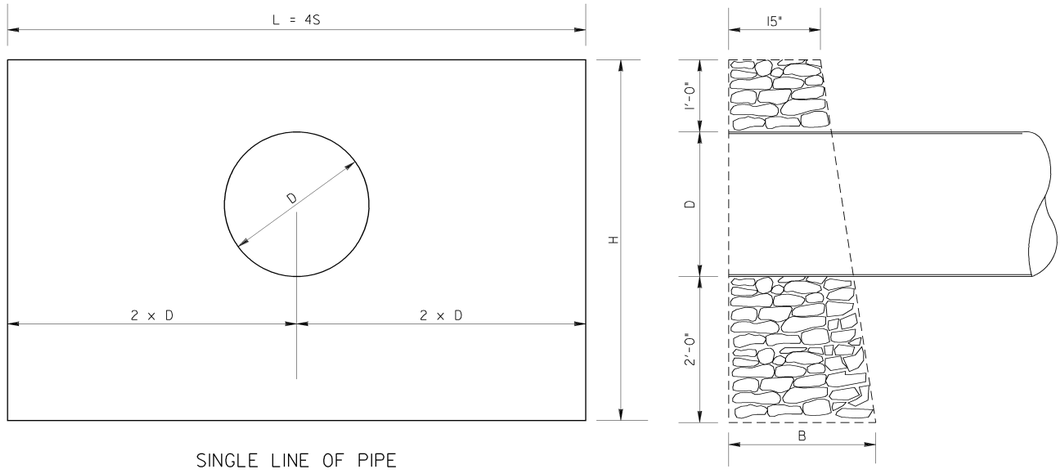

SINGLE LINE OF PIPE

NOTE:
QUANTITIES ARE BASED ON DEPTH OF TWO FT. BELOW PIPE. THIS DIMENSION MAY BE VARIED TO SUIT LOCAL CONDITIONS.

QUANTITIES FOR ONE END WALL		
D	CU. YDS. ONE LINE	CU. YDS. TWO LINE
12"	0.80	1.18
15"	1.09	1.64
18"	1.46	2.14
24"	2.23	3.26
30"	3.26	4.64
36"	4.44	6.41

DIMENSIONS FOR DOUBLE LINE OF PIPE						
D	H	L	S	P	S + D	B
12"	4'-0"	6'-0"	1'-0"	2'-0"	2'-0"	1'-7"
15"	4'-3"	7'-6"	1'-3"	2'-6"	2'-6"	1'-8 1/4"
18"	4'-6"	9'-0"	1'-6"	3'-0"	3'-0"	1'-10 1/4"
24"	5'-0"	12'-0"	2'-0"	4'-0"	4'-0"	2'-0"
30"	5'-6"	15'-0"	2'-6"	5'-0"	5'-0"	2'-2 1/2"
36"	6'-0"	18'-0"	3'-0"	6'-0"	6'-0"	2'-5 1/2"

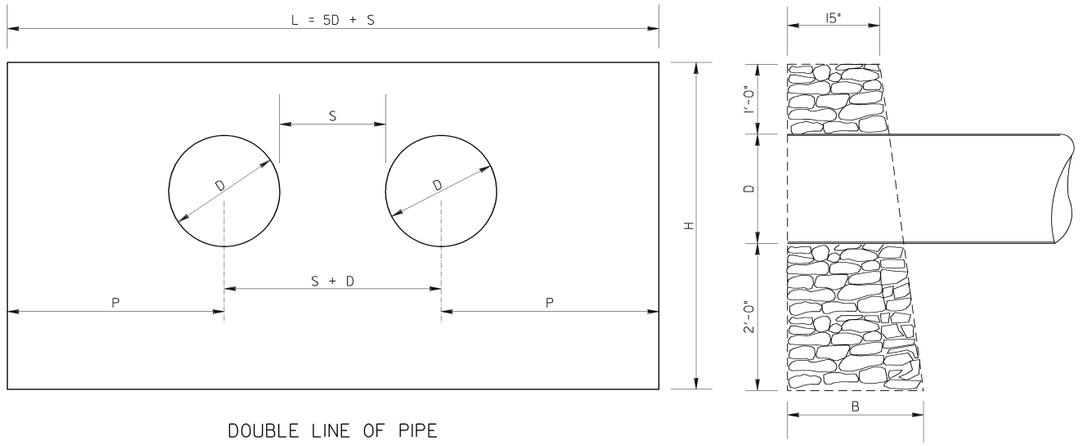

DOUBLE LINE OF PIPE

NOTES TO DESIGNER:

THIS STANDARD IS LIMITED FOR USE ONLY AT SPECIAL CONDITIONS. OTHERWISE USE OTHER STANDARDS FOR TAPERED HEADWALLS OR SAFETY END SECTIONS.

HEADWALLS ARE NOT TO BE PLACED INSIDE THE CLEAR ZONE.

DEPARTMENT OF TRANSPORTATION
STATE OF GEORGIA

STANDARD

RUBBLE MASONRY HEADWALLS FOR PIPE CULVERTS

STD. 1004 REVISED AND REDRAWN

NO SCALE — REV. & REDR. AUG. 1999

DATE / REVISION / BY

DESIGNED ____
REVISED ____
CHECKED ____

(SUBMITTED) James A. Brown
STATE ROAD & AIRPORT DESIGN ENGINEER

(APPROVED) Gerald L. Ponder
CHIEF ENGINEER

NUMBER 1004A

GDOT Georgia Department of Transportation | P. I. No. XXXXXXX

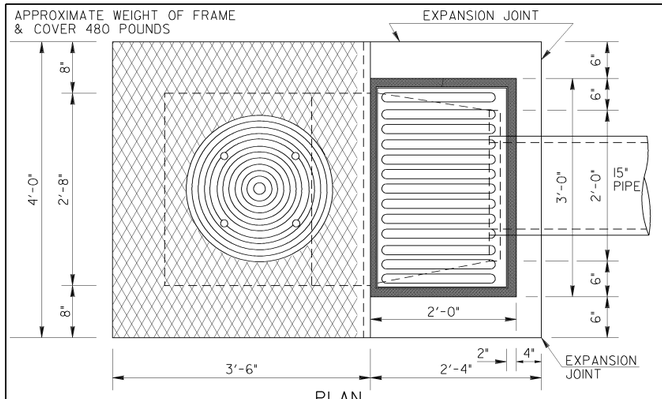

PLAN

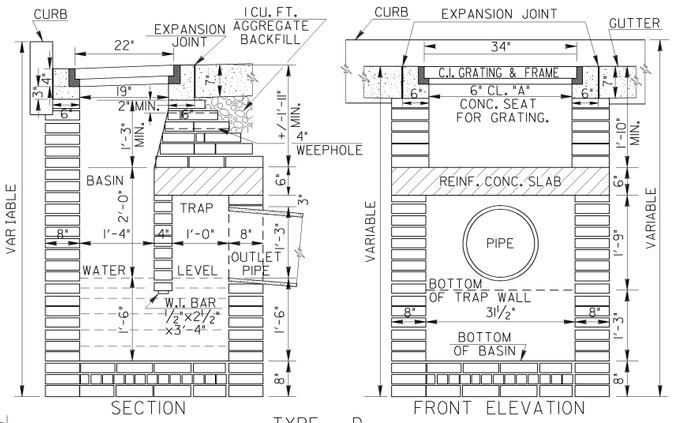

SECTION

FRONT ELEVATION

TYPE - D
TRAPPED BRICK INLET WITH GRATE
SECTION OF FRAME AND COVER

NOTE:
ALL CASTINGS SHALL CONFORM TO THE REQUIREMENTS OF THE STANDARD SPECIFICATIONS.

WEIGHTS
FRAME ESTIMATED 180 Lbs.
GRATING ESTIMATED 265 Lbs.
TOTAL 445 Lbs.

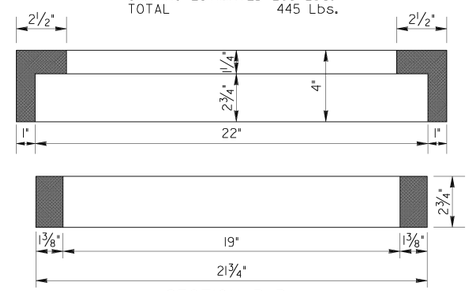

SECTION B-B

NOTE:
CASTINGS ARE CITY OF ATLANTA STD. AND MODIFICATION AS SHOWN FOR SECTION OF FRAME AND COVER.

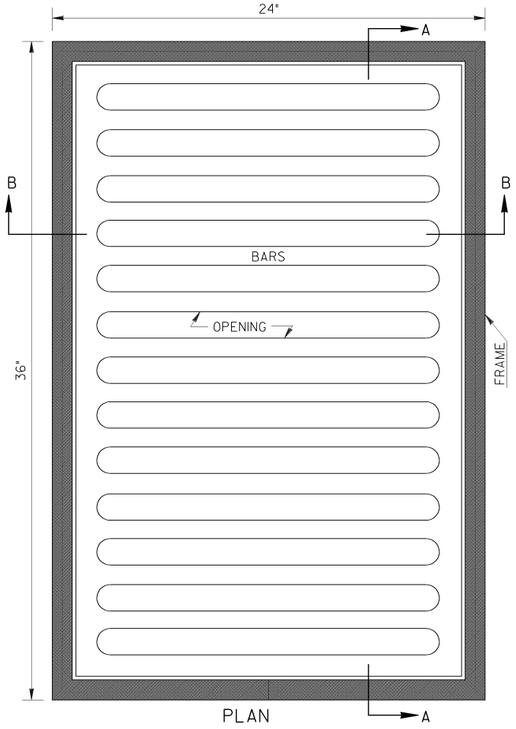

PLAN

STORM WATER GRATING

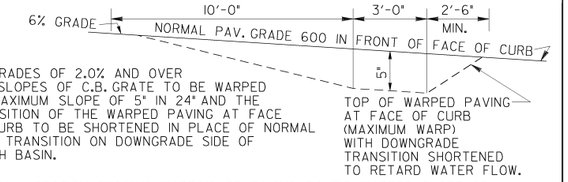

ON GRADES OF 2.0% AND OVER THE SLOPES OF C.B. GRATE TO BE WARPED TO MAXIMUM SLOPE OF 5" IN 24" AND THE TRANSITION OF THE WARPED PAVING AT FACE OF CURB TO BE SHORTENED IN PLACE OF NORMAL 10'-0" TRANSITION ON DOWNGRADE SIDE OF CATCH BASIN.

TOP OF WARPED PAVING AT FACE OF CURB (MAXIMUM WARP) WITH DOWNGRADE TRANSITION SHORTENED TO RETARD WATER FLOW.

LONGITUDINAL SECTION SHOWING WARPING OF PAVING TO FIT WARPED SLOPE OF C.B. GRATE ON GRADES OF 2.0% AND OVER-FULL WIDTH PAVING WITH INTERGRAL CURB (NO GUTTER).

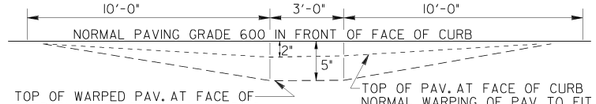

TOP OF WARPED PAV. AT FACE OF CURB SHOWING ADDITIONAL WARPING OF PAV. TO FIT ALLOWABLE 3" WARPING OF GRATE SLOPE.

TOP OF PAV. AT FACE OF CURB NORMAL WARPING OF PAV. TO FIT NORMAL SLOPE OF C.B. GRATE.

LONGITUDINAL SECTION SHOWING WARPING OF PAVING TO FIT SLOPE OF GRATING WHERE PAVING IS FULL WIDTH WITH INTERGRAL CURB (AND NO GUTTER).

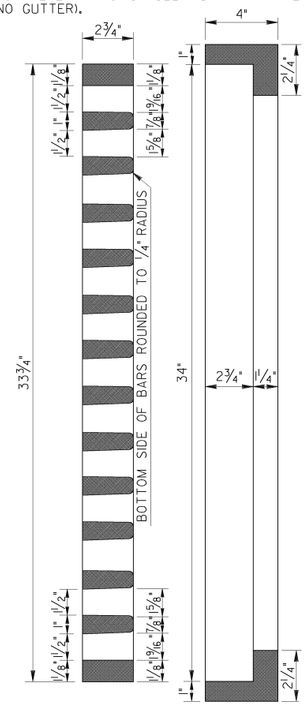

NOTE:
WEEPHOLES MAY BE 4" DIA. ROUND OR 4" SQUARE AT THE OPTION OF THE CONTRACTOR. AGGREGATE FOR BACKFILL SHALL CONSIST OF A MIXTURE OF 50% SIZE 57, M-58, 357, OR 467 COARSE AGGREGATE AND 50% SIZE 10 SAND AND SHALL BE PLACED IMMEDIATELY PRIOR TO COMPACTING OF THE BASE MATERIAL.

NOTE:
OPENINGS IN GRATES SHALL BE PERPENDICULAR TO DIRECTION OF TRAFFIC FOR ALL STRUCTURES.

STD. 1019B GRATE MAY BE SUBSTITUTED FOR IMPROVED HYDRAULIC CAPACITY.

SPECIAL NOTE:
THIS STANDARD SHOULD BE USED ONLY IN SAGS OR LOW POINTS. SEE OTHER STANDARDS FOR MORE EFFICIENT DRAINAGE STRUCTURES ON GRADES.

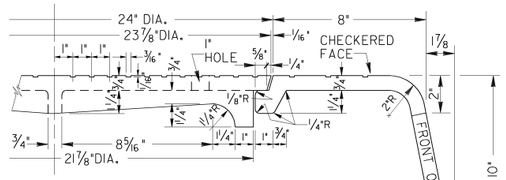

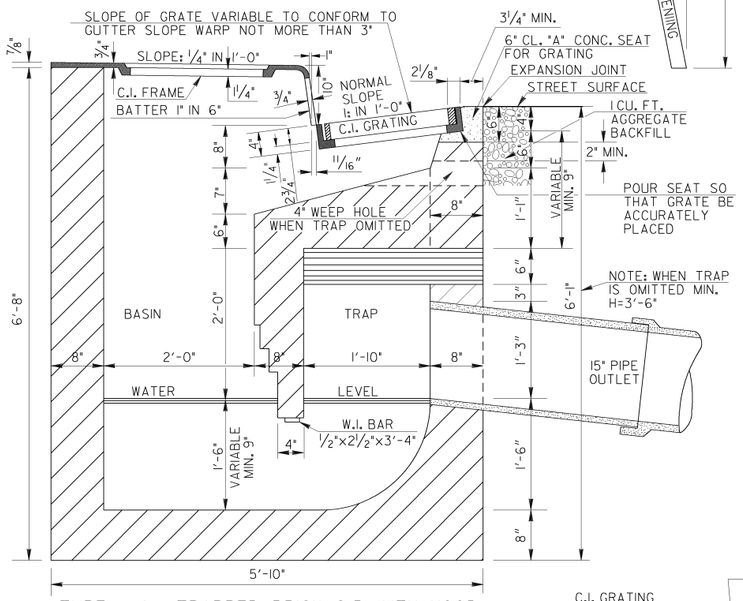

TYPE - A TRAPPED BRICK C.B. WITH HOOD
USE SMALL BRICK SIZE 8"x3 3/4"x2 1/8"

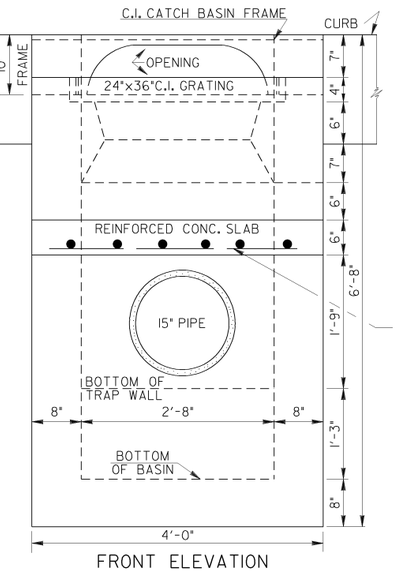

FRONT ELEVATION

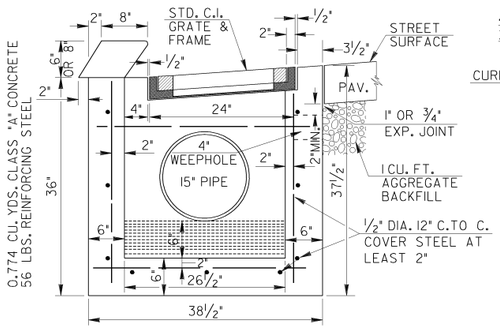

TYPE - B CONC. INLET BASIN

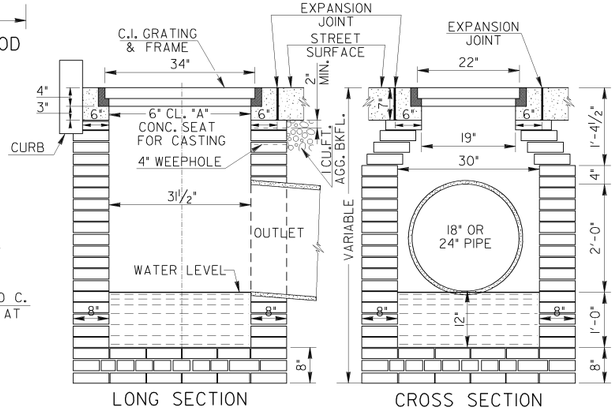

LONG SECTION CROSS SECTION

TYPE - C BRICK INLET BASIN

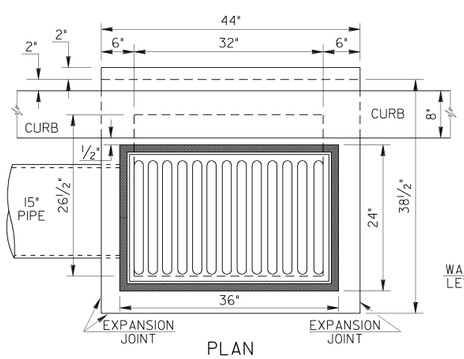

PLAN
CONC. INLET BASIN

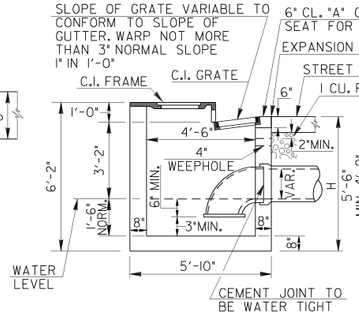

TYPE - A
TRAPPED BRICK C.B. WITH HOOD WITH TYPE E TRAP

SECTION A-A
SCALE: HOR. 1"=3'-0"
VERT. 1"=1'-0"

GENERAL NOTE:
ALL TRAPS WILL BE OMITTED UNLESS SHOWN ON PLANS.

DEPARTMENT OF TRANSPORTATION
STATE OF GEORGIA

STANDARD
CATCH BASINS WITH CAST IRON GRATE INLETS

REV. & REDR. SEPT. 1999

BY	REVISION	DATE

DES. ____ DRW. ____ TRA. ____ CHK. ____

(SUBMITTED) STATE ROAD & AIRPORT DESIGN ENGINEER

(APPROVED) CHIEF ENGINEER

NUMBER 1010

GDOT Georgia Department of Transportation | P. I. No. XXXXXXX

BRICK MANHOLE SECTION
(PIPE OUTSIDE DIAMETER IS 48" OR MORE)

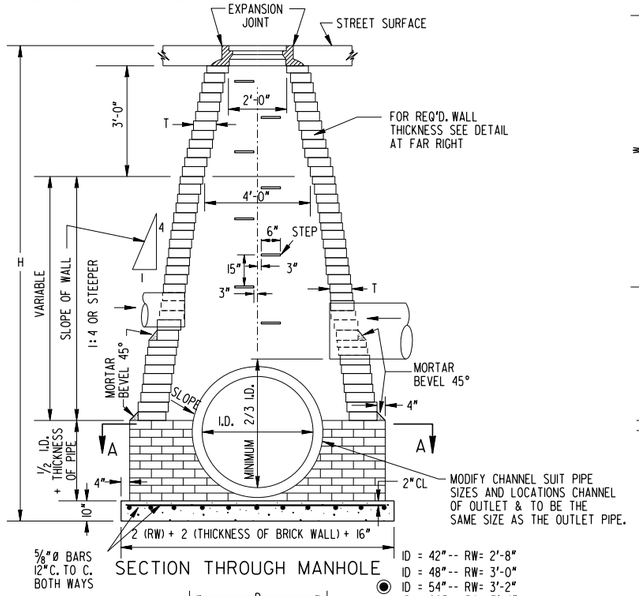

SECTION THROUGH MANHOLE

ID = 42"-- RW= 2'-8"
ID = 48"-- RW= 3'-0"
ID = 54"-- RW= 3'-2"
ID = 60"-- RW= 3'-4"
ID = 66"-- RW= 3'-7"
ID = 72"-- RW= 3'-9"
ID = 78"-- RW= 3'-11"
ID = 84"-- RW= 4'-2"
RW = INSIDE RADIUS OF WALL

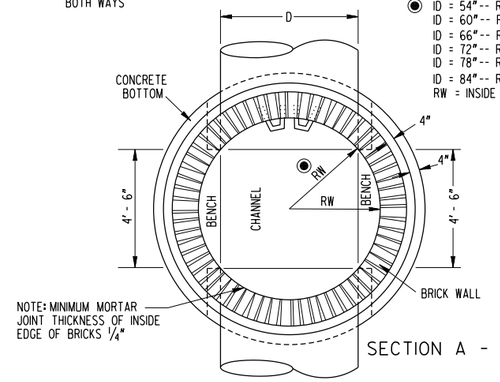

SECTION A - A

REINFORCED CONCRETE COVER

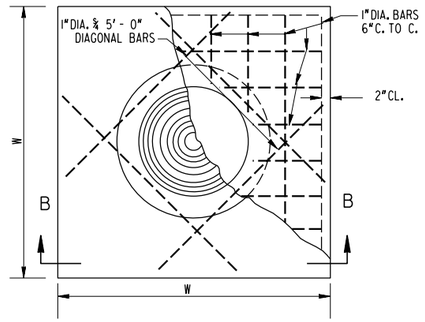

PLAN

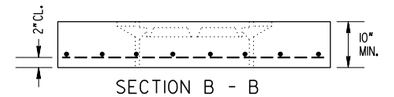

SECTION B - B

FRAME TO BE USED WITH CONCRETE COVER

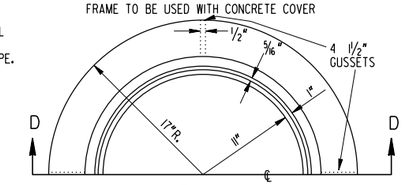

PLAN

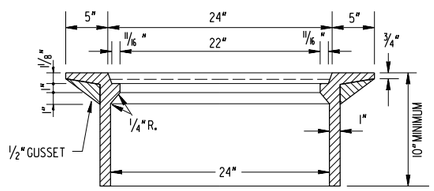

SECTION D - D

PLACEMENT FOR CONCRETE COVER

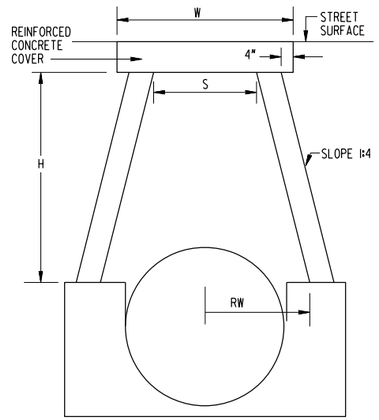

FORMULA FOR COMPUTING W
RW = INSIDE RADIUS OF WALL
S = 2RW - θ/2
W = S + 24"

NOTE:
USE CONCRETE COVER WITH MANHOLE CASTINGS IF FILL FROM TOP OF PIPE TO FINISHED SURFACE IS LESS THAN:

4'-6"FOR 42"PIPE
5'-0"FOR 48"PIPE
5'-6"FOR 54"PIPE
6'-0"FOR 60"PIPE
6'-6"FOR 66"PIPE
7'-0"FOR 72"PIPE
7'-6"FOR 78"PIPE
8'-0"FOR 84"PIPE

THICKNESS OF BRICK WALL
(SEE DETAIL AT FAR RIGHT)

DEPTH	THICKNESS (T)
TO 10'	✳ 8" MIN.
10' TO 20'	12"MIN.
20' TO 30'	16"MIN.

✳FOR COMBINATION BRICK & PRECAST M.H. (SEE BELOW) ONLY 12"OR 16"BRICK WALL THICKNESS IS TO BE USED FOR BASE.

BRICK MANHOLE SECTION
(PIPE OUTSIDE DIAMETER IS LESS THAN 48")

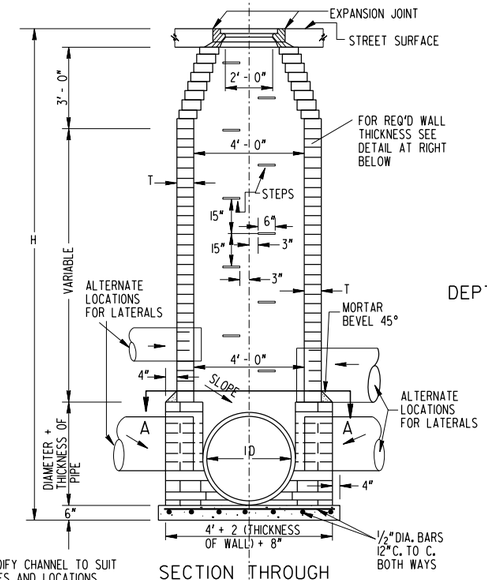

MODIFY CHANNEL TO SUIT PIPES AND LOCATIONS. CHANNEL AT OUTLET END TO BE THE SAME SIZE AS OUTLET PIPE.

SECTION THROUGH MANHOLE

SECTION A - A

CAST IRON STEP

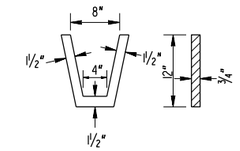

NOTE :
STEPS ARE REQUIRED IN ALL MANHOLES WHERE "H" IS GREATER THAN 4'-0". NUMBER AND LOCATION OF STEPS TO BE AS DIRECTED BY THE ENGINEER. PLASTIC OR RUBBER COATED STEPS LISTED IN THE GA. D.O.T. QUALIFIED PRODUCTS MANUAL MAY BE SUBSTITUTED.

DEPTH LIMITS FOR INCREASING WALL THICKNESS

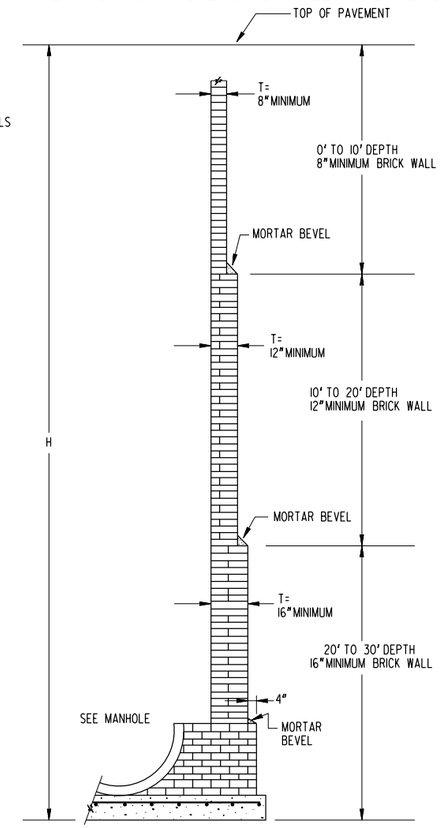

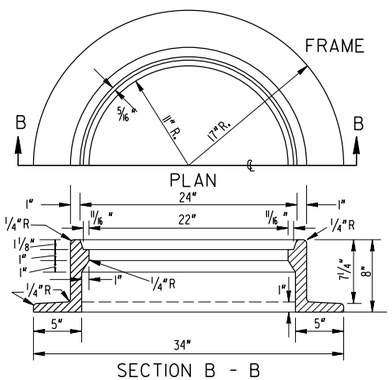

PLAN

SECTION B - B

APPROXIMATE WEIGHTS

C.I. FRAME	282 LBS.
C.I. COVER	178 LBS.

NOTE: COVER AND FRAME MUST BE FITTED BEFORE LEAVING SHOP, PAINT ACTUAL WEIGHT OF EACH CASTING ON ITS FACE.

MANHOLE FRAME & COVER SHOWN ON STD. 1011A PRECAST MAY BE USED AS AN ALTERNATE TO CASTINGS SHOWN HERE.

MANHOLE CASTINGS COVER

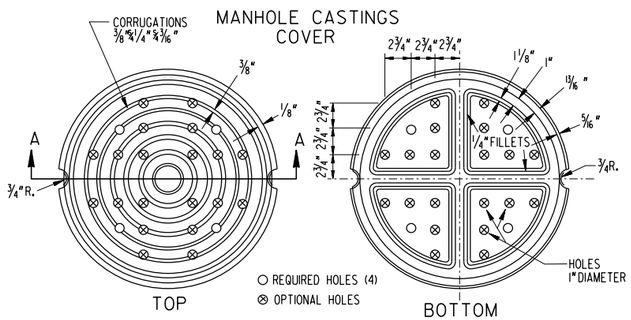

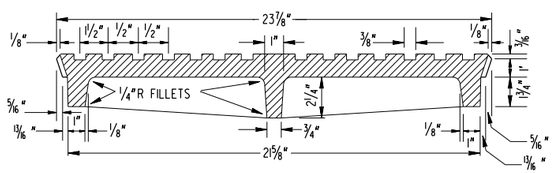

SECTION A - A

ALTERNATE - COMBINATION BRICK & PRECAST MAN HOLES

NOTES FOR COMBINATION MANHOLE:
- BRICK PORTION OF MANHOLE WILL BE CONSTRUCTED WITH SEAT TO GIVE BEST POSSIBLE FIT FOR PRECAST UNIT. MINIMUM THICKNESS FOR BRICK WALL WILL BE 12"FOR H TO 20 FT. AND 16"FOR H=20FT. TO 30 FT.
- PRECAST UNIT WITHOUT TONGUE OR GROOVE AT BOTTOM SHALL BE PLACED IN BRICK SEAT WITH MORTAR IN JOINT ALL ROUND. BRICK BASE SHALL SET FOR 24 HOURS MIN. BEFORE PRECAST SECTIONS ARE INSTALLED.
- STEPS IN THE BRICK PORTION OF MANHOLE WILL BE IN ALIGNMENT WITH AND MATCH THE STEPS IN THE PRECAST SECTIONS RATHER THAN AS SHOWN FOR THE ALL BRICK MANHOLES.

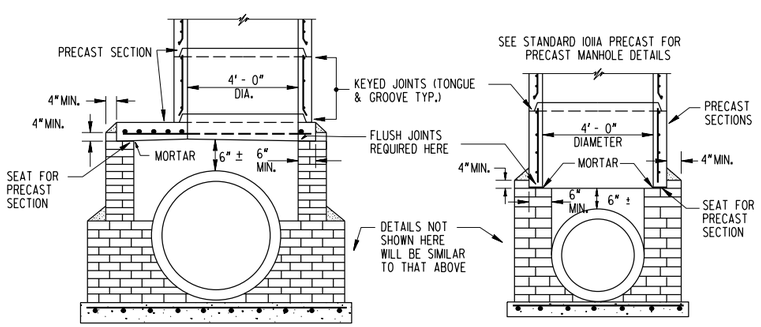

	DATE	DEPARTMENT OF TRANSPORTATION STATE OF GEORGIA
BY	REVISION	STANDARD BRICK MANHOLES
		NOT TO SCALE — REDRAWN JULY 2024 — OCTOBER 1981
DES. 8-58 DRW. R.M.U. TRA. G.M.E. CHK. R.K.C.	(SUBMITTED) STATE ROAD & AIRPORT DESIGN ENGR. (APPROVED) STATE HIGHWAY ENGINEER	NUMBER 1011A

GDOT Georgia Department of Transportation | P. I. No. XXXXXXX

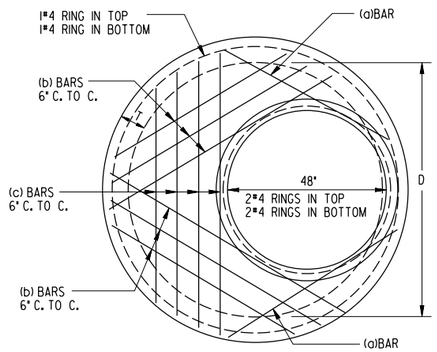

PLAN OF STEEL REINFORCEMENT

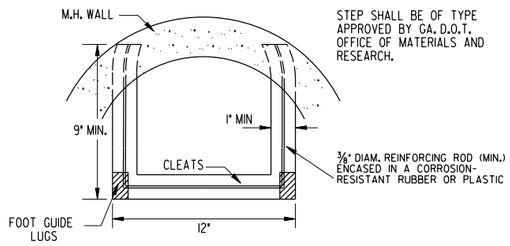

STEP SHALL BE OF TYPE APPROVED BY GA. D.O.T. OFFICE OF MATERIALS AND RESEARCH.

⅜" DIAM. REINFORCING ROD (MIN.) ENCASED IN A CORROSION-RESISTANT RUBBER OR PLASTIC

MIN. VERTICAL LOAD RESISTANCE = 400 LBS.
MIN. PULLOUT RESISTANCE = 700 LBS.

STEP DETAIL

STEPS ARE REQUIRED IN ALL MANHOLES OVER 4 FT. IN HEIGHT.

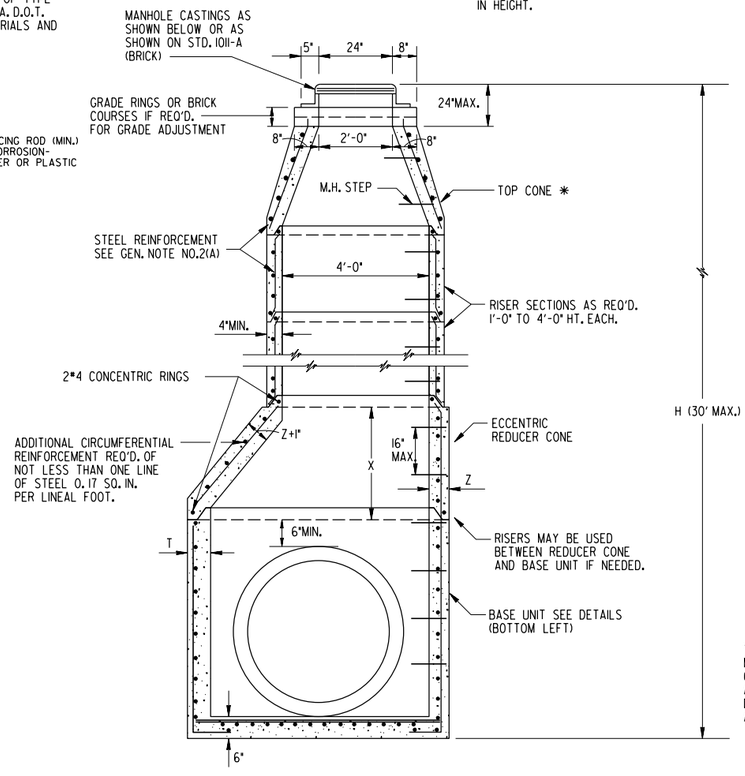

SECTIONAL DETAIL

(MANHOLE WITH BASE UNIT OF D=OVER 48")

* CONCENTRIC CONE SHOWN MIN. HT.=2'-0" ECCENTRIC CONES MAY BE USED AS AN ALTERNATE, MIN. HT.=3'-0" DESIGNED ACCORDING TO A.S.T.M. C-478

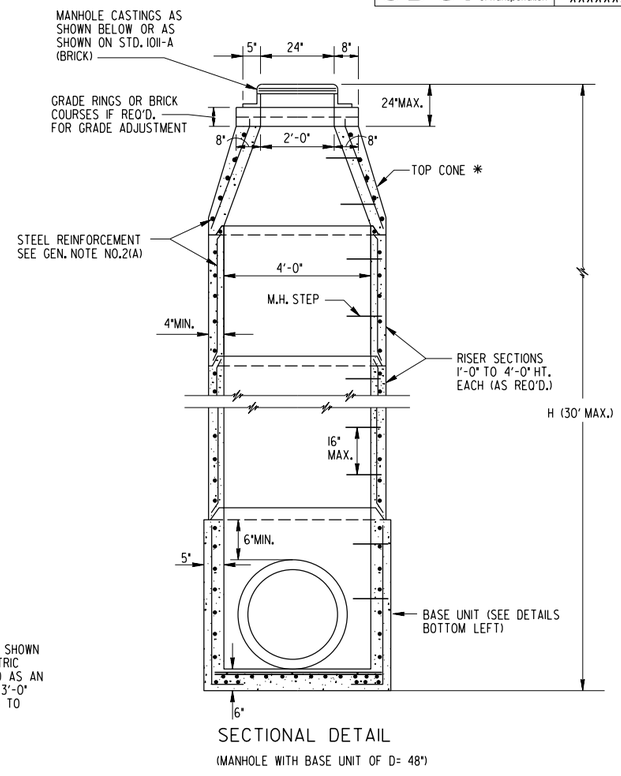

SECTIONAL DETAIL

(MANHOLE WITH BASE UNIT OF D= 48")

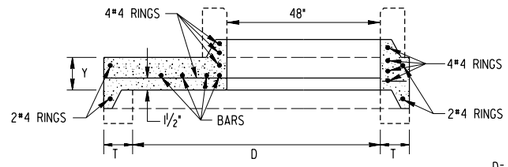

SECTIONAL DETAIL
REDUCER SLAB

REDUCER SLAB - REINF. AND DIMENSIONS							
D	Y MIN.	(a) BARS		(b) BARS		(c) BARS	
		NO.	SIZE	NO.	SIZE	NO.	SIZE
60"	8"	2	#6	4	#6	2	#6
72"	9"	2	#6	6	#6	4	#6

NOTE:
10 FT. MAXIMUM ALLOWANCE COVER ABOVE TOP OF REDUCER SLABS. REDUCER CONES TO BE USED WHERE REDUCER SLABS NOT PERMITTED.

D= INSIDE DIAMETER OF BASE UNIT

NOTE:
25 FT. MAXIMUM ALLOWABLE COVER ABOVE REDUCER CONE.

D	X(MIN)	Z(MIN)
60"	1'-6"	5"
72"	3'-0"	6"

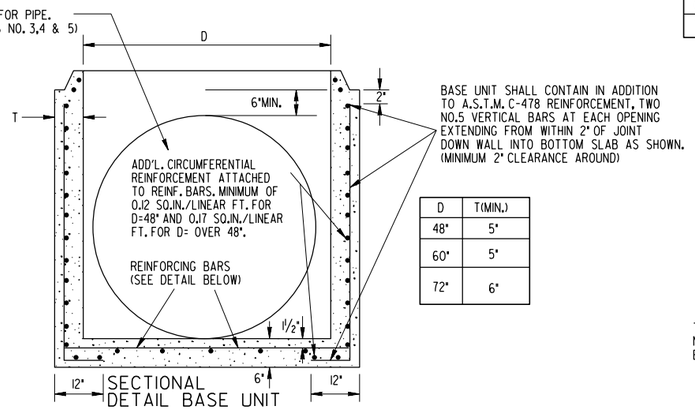

SECTIONAL DETAIL BASE UNIT

BASE UNIT SHALL CONTAIN IN ADDITION TO A.S.T.M. C-478 REINFORCEMENT, TWO NO.5 VERTICAL BARS AT EACH OPENING EXTENDING FROM WITHIN 2" OF JOINT DOWN WALL INTO BOTTOM SLAB AS SHOWN. (MINIMUM 2" CLEARANCE AROUND)

D	T(MIN.)
48"	5"
60"	5"
72"	6"

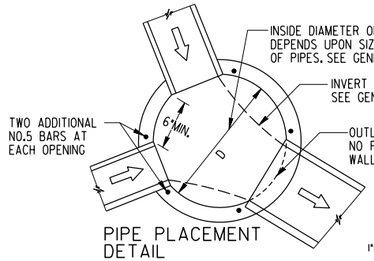

PIPE PLACEMENT DETAIL

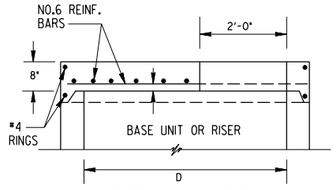

SECTIONAL DETAIL

GENERAL NOTES:

1. MATERIALS: ALL CONCRETE, STEEL BARS AND STEEL WIRE REINFORCEMENT SHALL COMPLY WITH SECTION 866.02 OF GEORGIA STANDARD SPECIFICATIONS AND SPECIAL PROVISION WHICH MODIFY SECTION 866.02.

2. REINFORCEMENT:
   (A) PLACEMENT AND DESIGN OF STEEL REINFORCEMENT IN RISER UNITS, CONE SECTIONS, GRADE RINGS AND JOINTS SHALL BE IN COMPLIANCE WITH A.S.T.M. C-478 UNLESS OTHERWISE NOTED.
   (B) BASE UNITS, REDUCER SLABS AND FLAT TOP SLABS SHALL HAVE STEEL REINFORCEMENT AS SHOWN IN DETAILS AT LEFT.

3. OPENINGS FOR PIPES LARGER THAN 6 INCHES IN DIAMETER ARE TO BE PRECAST. A MINIMUM OF 6" ALONG THE INTERCIRCUMFERENCE IS TO REMAIN BETWEEN THE EXTREMITIES OF HOLE FOR ADJACENT PIPE IN ANY SINGLE UNIT. A MINIMUM OF TWO REINF. BARS SHALL REMAIN IN WALL BETWEEN ANY TWO OPENINGS.

4. THE CONTRACTOR WILL FURNISH THE FABRICATOR WITH THE ANGLE OF ALIGNMENT AND SIZE OF ALL PIPES TO ENTER MANHOLE AND THE HEIGHT OF STRUCTURE.

5. BASE UNITS SHALL HAVE SUFFICIENT HEIGHT TO ALLOW FOR MINIMUM OF 6" OF WALL BETWEEN TOP OF HIGHEST OPENING FOR PIPES AND BOTTOM OF JOINT.

6. INVERT CHANNELS:
   (A) FOR SANITARY SEWER MANHOLES SEE GEORGIA STANDARD SPECIFICATIONS FOR CHANNEL REQUIREMENTS.
   (B) FOR STORM SEWER MANHOLES, CHANNELS BUILT TO SUIT PIPE SIZE AND LOCATION. HEIGHT OF CHANNEL EQUAL TO ½ DIAMETER OF OUTLET PIPE, CHANNEL BUILT FROM GROUT OR CLASS "A" CONCRETE.

7. PIPES ARE TO BE EXTENDED INTO STRUCTURE WALL A MINIMUM OF 4" BUT SHOULD NOT EXTEND BEYOND INTERIOR WALL OF STRUCTURE.

8. ALL JOINTS, EXCEPT FOR GRADE RINGS AND TOP OF TOP CONE, SHALL HAVE TONGUE AND GROOVE SECTION.

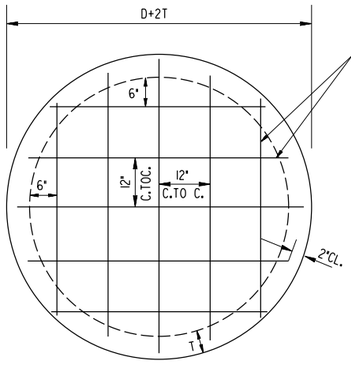

PLAN OF STEEL REINFORCEMENT IN BOTTOM SLAB

BASE UNIT

D	BAR SIZE
48"	#5
60"	#6
72"	#6

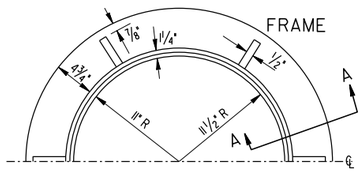

APPROX. WEIGHTS: FRAME - 200 LBS.
COVER - 135 LBS.

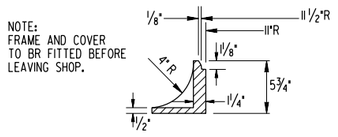

NOTE:
FRAME AND COVER TO BR FITTED BEFORE LEAVING SHOP.

SECTION A-A

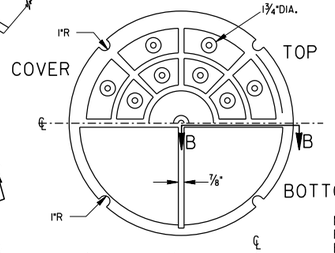

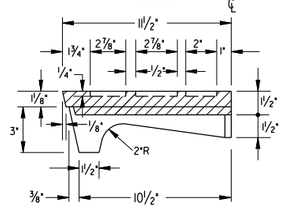

SECTION B-B

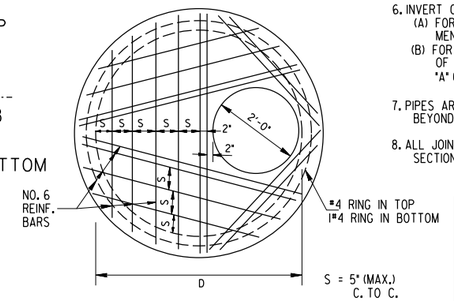

PLAN OF REINFORCING STEEL

FLAT TOP SLAB IS FOR USE IN AREA OF MINIMUM COVER ONLY. MAXIMUM HEIGHT OF MANHOLE WITH FLAT TOP SLAB SHALL BE 4FT. ABOVE TOP OF HIGHEST ENTERING PIPE.

FLAT TOP SLAB

MANHOLE CASTINGS (C.I.)

BY	DATE	REVISION
R.M.U.	6-1-75	CASTINGS & BASE U.

DEPARTMENT OF TRANSPORTATION
STATE OF GEORGIA

STANDARD
PRECAST REINFORCED CONCRETE MANHOLES

NOT TO SCALE | REDRAWN JULY 2024 | AUGUST 1973

DESIGNED G.C.L. R.M.U.
DRAWN R.M.U.
CHECHED J.R.C.

(SUBMITTED) STATE ROAD DESIGN ENGINEER

(APPROVED) STATE HIGHWAY ENGINEER

NUMBER 1011A PRECAST

DIMENSIONS				QUANTITIES ONE CATCH BASIN					SKEW CONNECTIONS DIMENSIONS	
INSIDE D OF PIPE	90° W1	NORMAL WI	NORMAL H W2+10"	CU YDS CL A CONC		LBS REINF STEEL		C.I. GRATE	WI	
				NORMAL H	FOR EACH 1' ADD H	NORMAL H	FOR EACH 1' ADD H		30°	45°
15"	2'-8"	4'-0"	4'-10"	1.696	0.315	132	18	1		
18"	2'-8"	4'-3"	5'-1"	1.706	0.315	135	18	1		
24"	2'-8"	4'-9"	5'-7"	1.779	0.315	153	18	1	3'-1"	3'-10"
30"	3'-4"	5'-3"	6'-1"	2.351	0.339	174	19	1	3'-10"	4'-9"
36"	4'-0"	5'-9"	6'-7"	2.568	0.366	179	20	1	4'-8"	5'-8"

NOTE: OPENINGS IN GRATES SHALL BE PERPENDICULAR TO DIRECTION OF TRAFFIC FOR ALL STRUCTURES.

GDOT Georgia Department of Transportation | P. I. No. XXXXXXX

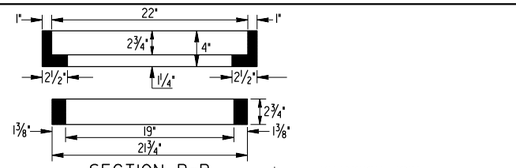

SECTION B-B

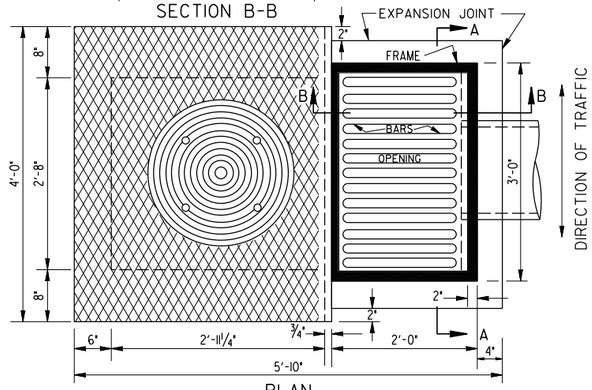

PLAN

DIRECTION OF TRAFFIC

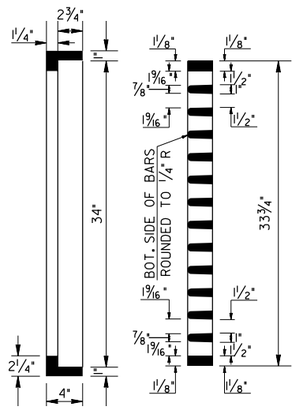

SECTION A-A

NOTE: CASTINGS ARE CITY OF ATLANTA STD. AND MODIFICATION AS SHOWN FOR SECTION OF FRAME AND COVER

SPECIAL NOTE:
THIS STANDARD SHOULD BE USED ONLY IN SAGS OR LOW POINTS. SEE OTHER STANDARDS FOR MORE EFFICIENT DRAINAGE STRUCTURES ON GRADES.

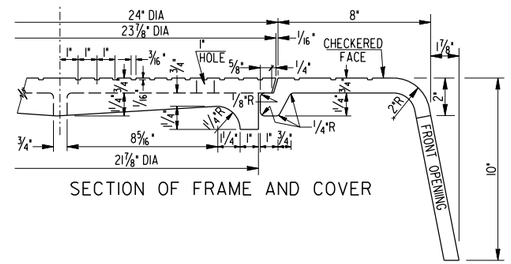

SECTION OF FRAME AND COVER

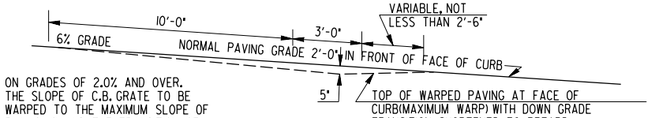

ON GRADES OF 2.0% AND OVER. THE SLOPE OF C.B. GRATE TO BE WARPED TO THE MAXIMUM SLOPE OF 5" IN 2'-0" AND THE TRANSITION OF THE WARPED PAVING AT FACE OF CURB TO BE SHORTENED TO NOT LESS THAN 2'-6" IN PLACE OF NORMAL 10'-0" TRANSITION ON DOWN GRADE SIDE OF C.B.

LONGITUDINAL SECTION SHOWING WARPING OF PAVING TO FIT WARPED SLOPE OF C.B. GRATE ON GRADES OF 2.0% AND OVER-FULL WIDTH PAVING WITH INTERGRAL CURB (NO GUTTER).

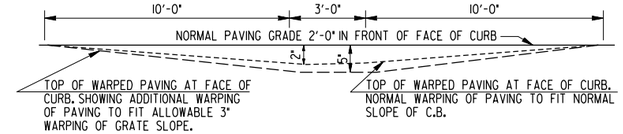

LONGITUDINAL SECTION SHOWING WARPING OF PAVING TO FIT SLOPE OF GRATING WHERE PAVING IS FULL WIDTH WITH INTERGRAL CURB (NO GUTTER).

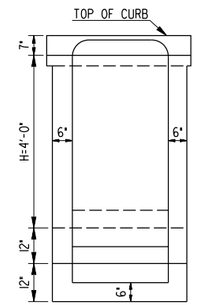

NOTE:
WEEPHOLES MAY BE EITHER 4" DIA ROUND OR 4" SQUARE.
AGGREGATE FOR BACKFILL AT WEEPHOLES SHALL CONSIST OF A MIXTURE OF 50% SIZE 57, M-58, 357 OR 467 COARSE AGGREGATE AND 50% SIZE 10 SAND, AND SHALL BE PLACED IMMEDIATELY PRIOR TO COMPACTING BASE MATERIAL.

NOTE:
ALL TRAPS WILL BE OMITTED UNLESS SHOWN ON PLANS.

SLOPE OF GRATE VARIABLE TO CONFORM TO SLOPE OF GUTTER. WARP NOT MORE THAN 3"

APPROXIMATE WEIGHT OF FRAME & COVER 480 POUNDS
APPROXIMATE WEIGHT OF FRAME & GRATE 445 POUNDS

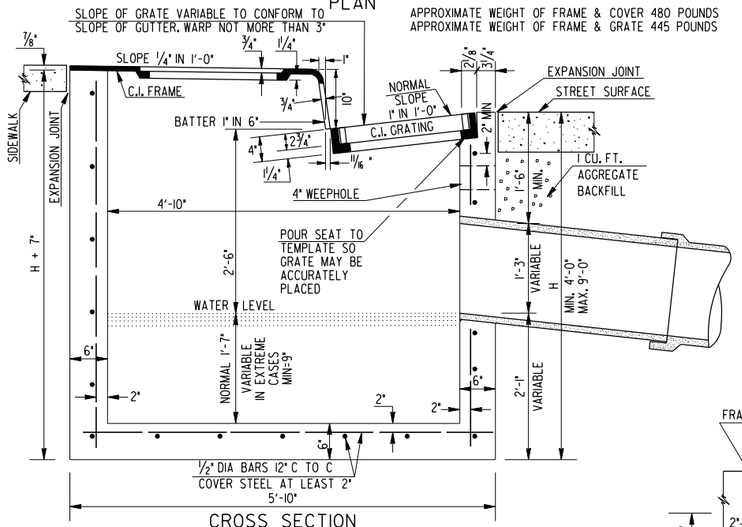

CROSS SECTION
TYPE A (WITHOUT TRAP)

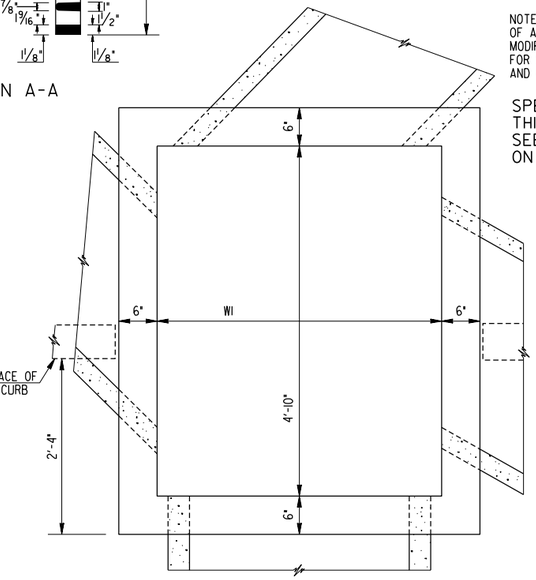

SKEW PIPE CONNECTIONS

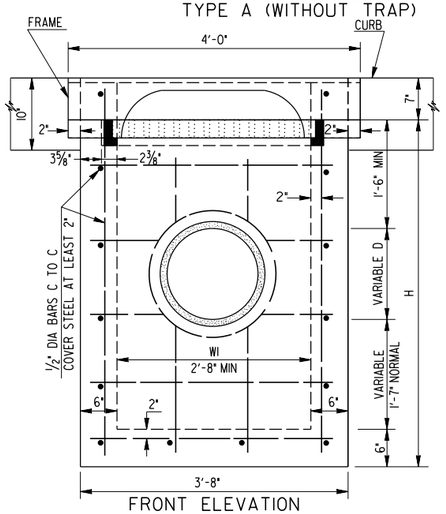

FRONT ELEVATION

NOTE: QUANTITIES SHOWN ARE APPROXIMATE FOR MINIMUM WI WITH ONE INLET AND ONE OUTLET CROSS DRAIN PIPE CONNECTION WI DIMENSION FOR SKEWED CONNECTIONS TO CATCH BASIN ARE VARIABLE ACCORDING TO SKEWED INLET OR OUTLETS USED.

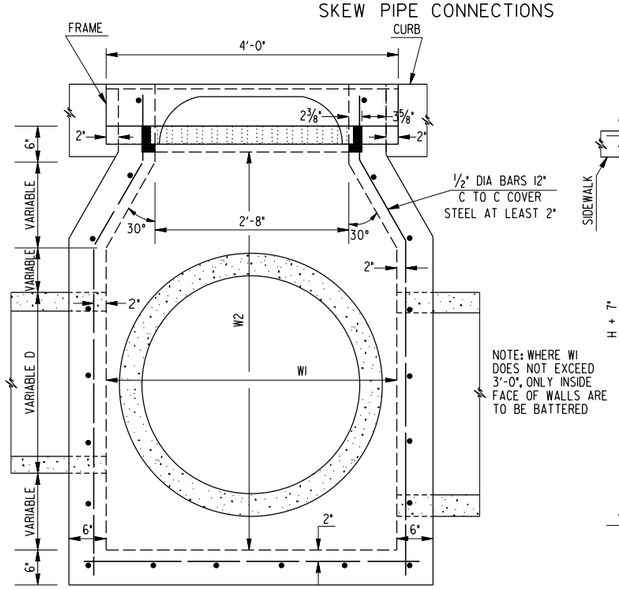

DETAIL OF WALLS WI EXCEEDS 2'-8"
REINF. CONC. CATCH BASIN WITH HOOD-TYPE-A
WITH & WITHOUT TRAP

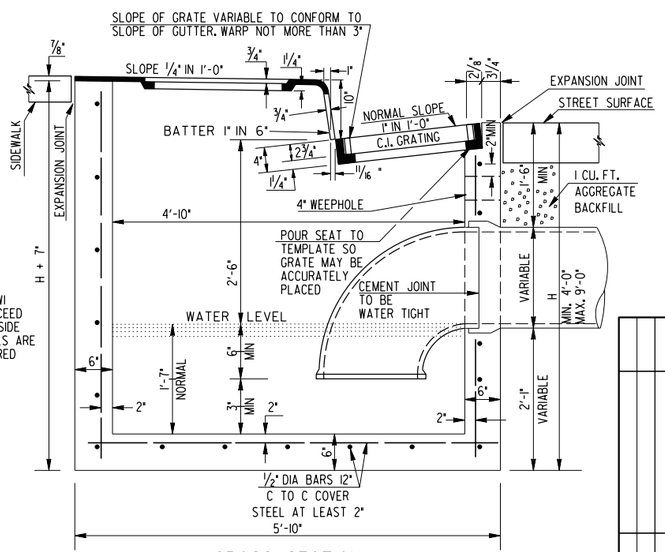

CROSS SECTION
TYPE A (WITH TRAP)

REVISION	DATE	DEPARTMENT OF TRANSPORTATION STATE OF GEORGIA	
		STANDARD	
		CATCH BASINS WITH CASTINGS	
		REINFORCED CONCRETE BASIN WITH HOOD - TYPE A	
		NOT TO SCALE REDRAWN JULY 2024	AUG. 1999
BY	DESIGNED ____ DRAWN M.A.B. CHECHED G.L.O.	(SUBMITTED) STATE ROAD & AIRPORT DESIGN ENGINEER (APPROVED) CHIEF ENGINEER	NUMBER 1013

STATE	PROJECT NUMBER	SHEET NO.	TOTAL SHEETS
GA.			

CONCRETE END WALLS

DIMENSIONS AND ESTIMATED QUANTITIES

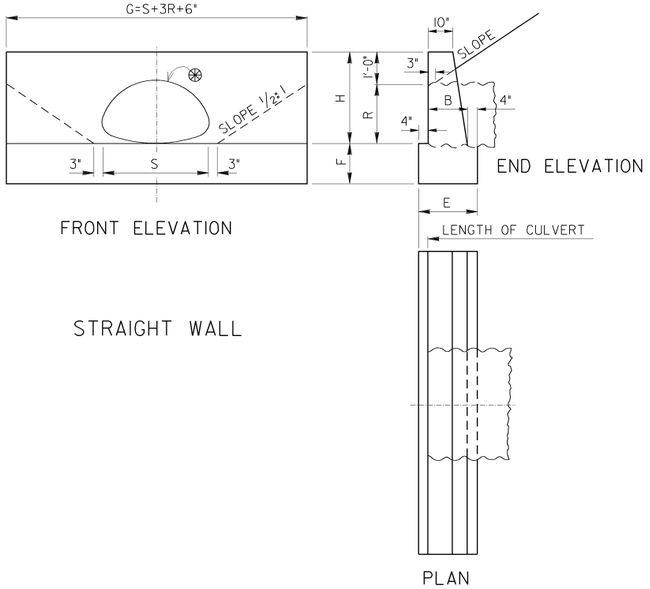

FRONT ELEVATION

STRAIGHT WALL

PLAN

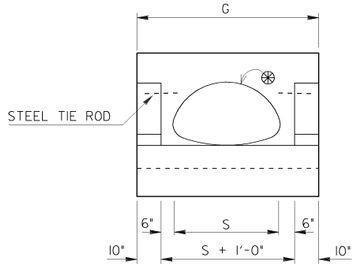

FRONT ELEVATION

U TYPE WINGS

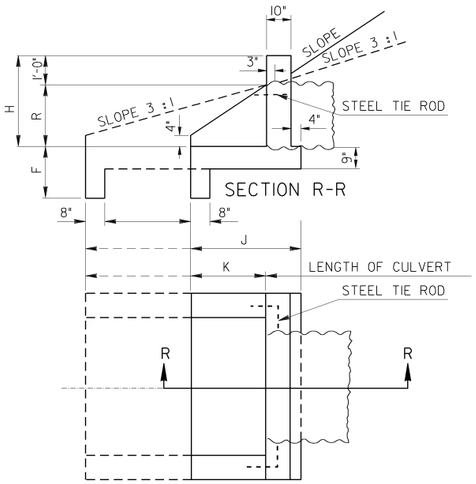

PLAN

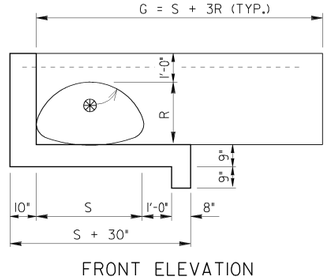

FRONT ELEVATION

L TYPE WINGS

NOTE: LENGTH OF L TYPE WINGS MAY BE VARIED. TO SUIT LOCAL CONDITIONS AS DIRECTED BY THE ENGINEER.

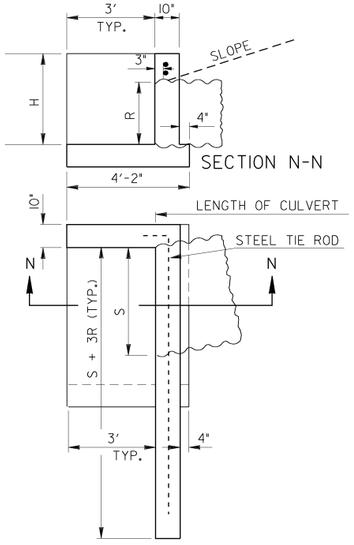

PLAN

STRAIGHT WALL

ARCH NUMBER	GAUGE	DIMENSIONS: OPENING S SPAN	OPENING R RISE	OPENING AREA SQ.FT.	WALL G S+3R+6"	WALL H	WALL B	FOOTING E	FOOTING F	QUANTITIES ONE END WALL: CL. 'B" CONCRETE WALL CU.FT.	FOOT CU.FT.	TOTAL CU.FT.	TOTAL CU.YD.	CONC.IN WALL AND FOOTING FOR EACH ADDITIONAL PIPE LINE
1	16	18"	11"	1.1	4'-9"	1'-11"	1'-2"	1'-10"	1'-0"	7.91	8.71	16.62	0.62	0.30
2	16	22"	13"	1.5	5'-7"	2'-1"	1'-2"	1'-10"	1'-0"	10.01	10.24	20.25	0.75	0.35
3	16	26"	15½"	2.1	6'-6½"	2'-3½"	1'-2"	1'-10"	1'-2"	12.74	13.99	26.73	0.99	0.44
4	14	30"	17"	2.8	7'-3"	2'-5"	1'-3"	1'-11"	1'-3"	15.07	17.37	32.44	1.20	0.52
5	14	37"	21"	4.3	8'-10"	2'-9"	1'-4"	2'-0"	1'-4"	21.19	23.56	44.75	1.66	0.66
6	12	44"	25"	5.9	10'-5"	3'-1"	1'-4"	2'-0"	1'-4"	27.83	27.78	55.61	2.06	0.78
7	12	52"	30"	8.4	12'-4"	3'-6"	1'-6"	2'-2"	1'-6"	39.55	40.08	79.63	2.95	1.05
8	12	59"	34"	10.6	3'-11"	3'-10"	1'-7"	2'-3"	1'-7"	50.33	49.58	99.91	3.70	1.27
9	12	66"	38"	13.2	15'-6"	4'-2"	1'-9"	2'-5"	1'-8"	64.48	62.43	126.91	4.70	1.56
10	10	72"	44"	16.9	17'-6"	4'-8"	2'-0"	2'-8"	2'-0"	89.00	93.33	182.33	6.75	2.11

L TYPE WINGS

ARCH NUMBER	GAUGE	DIMENSIONS: OPENING S SPAN	OPENING R RISE	OPENING AREA SQ.FT.	WALL H	WALL G S + 3R	WALL S + 30"	QUANTITIES ONE END WALL: CL. 'B" CONCRETE WALL CU.FT.	FOOT CU.FT.	TOTAL CU.FT.	TOTAL CU.YD.	STEEL TIE RODS
1	16	18"	11"	1.1	1'-11"	4'-3"	4'-0"	11.99	14.58	26.57	0.98	2-3/4"DIA. 4'-3"LONG
2	16	22"	13"	1.5	2'-1"	5'-1"	4'-4"	14.23	15.62	29.85	1.11	2-3/4"DIA. 5'-1"LONG
3	16	26"	15½"	2.1	2'-3½"	6'-0½"	4'-8"	17.11	16.67	33.78	1.25	2-3/4"DIA. 6'-0"LONG
4	14	30"	17"	2.8	2'-5"	6'-9"	5'-0"	18.98	17.71	36.69	1.36	2-3/4"DIA. 6'-9"LONG
5	14	37"	21"	4.3	2'-9"	8'-4"	5'-7"	24.30	19.53	43.83	1.62	2-3/4 "DIA. 8'-4"LONG
6	12	44"	25"	5.9	3'-1"	9'-11"	6'-2"	30.41	21.36	51.77	1.92	2-3/4 "DIA. 9'-11"LONG
7	12	52"	30"	8.4	3'-6"	1'-10"	6'-10"	38.69	23.44	62.13	2.30	2-3/4 "DIA. 11'-10"LONG
8	12	59"	34"	10.6	3'-10"	13'-5"	7'-5"	46.27	25.26	71.53	2.65	2-3/4 "DIA. 13'-5"LONG
9	12	66"	38"	13.2	4'-2"	15'-0"	8'-0"	54.39	27.08	81.47	3.02	2-3/4 "DIA. 15'-0"LONG
10	10	72"	44"	16.9	4'-8"	17'-0"	8'-6"	66.93	28.65	95.58	3.54	2-3/4 "DIA. 17'-0"LONG

INLET BEVEL DETAIL

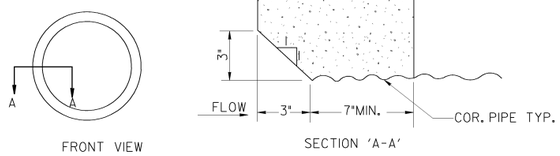

U TYPE WINGS

ARCH NUMBER	GAUGE	1½:1 FILL SLOPE: DIMENSIONS OPENING S SPAN	OPENING R RISE	OPENING AREA SQ.FT.	WALL G	WALL H	WALL K	FOOTING F	FOOTING J	QUANTITIES ONE END WALL: CL. 'B" CONCRETE WALL CU.FT.	FOOT CU.FT.	TOTAL CU.FT.	TOTAL CU.YD.	STEEL TIE RODS	3:1 FILL SLOPE: K	J	QUANTITIES ONE END WALL: CL. 'B" CONCRETE WALL CU.FT.	FOOT CU.FT.	TOTAL CU.FT.	TOTAL CU.YD.	STEEL TIE RODS
1	16	18"	11"	1.1	4'-2"	1'-11"	0'-11"	1'-3"	2'-1"	6.7	7.9	14.6	0.54	NONE	1'-9"	2'-11"	7.6	10.5	18.1	0.67	NONE
2	16	22"	13"	1.5	4'-6"	2'-1"	1'-2"	1'-3"	2'-4"	7.9	9.4	17.3	0.64	NONE	2'-3"	3'-5"	9.2	13.0	22.2	0.82	NONE
3	16	26"	15½"	2.1	4'-10"	2'-3½"	1'-6"	1'-3"	2'-8"	9.5	11.3	20.8	0.77	2¾"DIA. 2'-0"LONG	2'-11"	4'-2"	11.4	16.7	28.1	1.04	2¾"DIA. 2'-0"LONG
4	14	30"	17"	2.8	5'-2"	2'-5"	1'-8"	1'-6"	2'-10"	10.5	13.6	24.1	0.89	2¾"DIA. 2'-0"LONG	3'-3"	4'-5"	12.8	19.7	32.5	1.20	2¾"DIA. 2'-0"LONG
5	14	37"	21"	4.3	5'-9"	2'-9"	2'-2"	1'-6"	3'-4"	13.4	17.2	30.6	1.13	2¾"DIA. 2'-6"LONG	4'-3"	5'-5"	17.0	26.2	43.2	1.60	2¾"DIA. 2'-6"LONG
6	12	44"	25"	5.9	6'4"	3'-1"	2'-8"	1'-9"	3'-10"	16.7	22.4	39.1	1.45	2¾"DIA. 2'-6"LONG	5'-3"	6'-5"	21.9	34.7	56.6	2.10	2¾"DIA. 2'-6"LONG
7	12	52"	30"	8.4	7'-0"	3'-6"	3'-3	1'-9"	4'-5"	21.1	27.9	49.0	1.81	2¾"DIA. 3'-0"LONG	6'-6"	7'-8"	28.8	44.9	73.7	2.72	2¾"DIA. 3'-0"LONG
8	12	59"	34"	10.6	7'-7"	3'-10"	3'-9"	2'-0"	4'-11"	25.3	34.3	59.6	2.21	2¾"DIA. 3'-6"LONG	7'-6"	8'-8"	35.2	55.6	90.8	3.36	2¾"DIA. 3'-6"LONG
9	12	66"	38"	13.2	8'-2"	4'-2"	4'-3"	2'-0"	5'-5"	29.8	40.0	69.8	2.59	2¾"DIA. 4'-0"LONG	8'-6"	9'-8"	42.2	66.0	108.2	4.01	2¾"DIA. 4'-0"LONG
10	10	72"	44"	16.9	8'-8"	4'-8"	5'-0"	2'-0"	6'-2"	36.3	47.3	83.6	3.10	2¾"DIA. 4'-6"LONG	10.0"	11'-2"	53.0	79.8	132.8	4.92	2¾"DIA. 4'-6"LONG

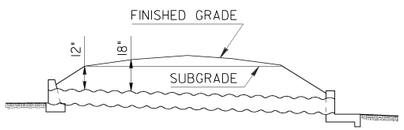

SECTION OF ROADWAY SHOWING DESIRABLE MINIMUM DEPTHS OF FILL OVER CULVERTS

NOTE: GRADE GENERALLY TO FOLLOW SLOPE OF STREAM. DESIRABLE LIMITS 2% TO 4%.

APPROXIMATE DIMENSIONS OF THE PIPE ARCH

ARCH NUMBER	SPAN INSIDE	RISE INSIDE	OUTSIDE MEASUREMENTS OVER PLAIN END: Ⓦ	R	B	C
1	18"	11"	4½"	11⅜"	5"	10¼"
2	22"	13"	4½"	13"	5⅛"	13⅜"
3	26"	15½"				
4	30"	17"	5½"	18½"	6⅝"	19¾"
5	37"	21"	6"	21"	7¾"	25½"
6	44"	25"	6"	24"	8¼"	33¼"
7	52"	30"	6"	28"	8¾"	41¼"
8	59"	34"	8"	31"	10¾"	43¾"
9	66"	38"	8"	35"	11"	51¼"
10	72"	44"	8"	38"	11¾"	55½"

DIMENSIONS ARE MEASURED FROM INSIDE CRESTS OF CORRUGATIONS.

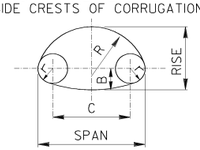

Ⓦ IF PIPE HAS NEITHER A GROOVE NOR A SPIGOT AT ITS INLET, AN INLET BEVEL WILL BE REQ'D.

GENERAL NOTES:

1. QUANTITIES SHOWN ARE TO BE USED WHEN CORRUGATED METAL PIPE IS DESIGNATED. WHEN ANY OTHER TYPE OF PIPE IS DESIGNATED DEDUCTIONS SHALL BE MADE FROM QUANTITY SHOWN TO ALLOW FOR THICKNESS OF PIPE.
2. DIMENSION 'F" TO BE VARIED TO FIT LOCAL CONDITIONS. THE TABULATED VALUES ARE RECOMMENDED UNDER USUAL CONDITIONS BUT FOOTINGS SHOULD BE PROTECTED FROM SCOUR.
3. CHAMFER ALL EXPOSED EDGES ¾".
4. PROVIDE GOOD FOUNDATION UNDER PIPES USING CONCRETE IF NATURAL CONDITIONS ARE VERY BAD. PROTECT BED AND SLOPES WITH RIP RAP OR PAVING WHERE NECESSARY, ESPECIALLY NEAR OUTLETS. PAVING TO BE LAID IN CEMENT MORTAR OR GROUTED.
5. A 2" TOLERANCE, PLUS OR MINUS, ON SPAN AND RISE WILL BE PERMITTED, BUT OPENING SPECIFIED FOR VARIOUS ARCHES WILL BE REQUIRED.
6. PIPE ARCH CULVERTS ARE TO BE USED ONLY WHERE SUFFICIENT HEADROOM IS NOT AVAILABLE FOR USE OF FULL ROUND PIPE. USE MULTIPLE LINE OF ROUND PIPE WHERE FEASIBLE.

DEPARTMENT OF TRANSPORTATION
STATE OF GEORGIA

STANDARD
PIPE ARCH CULVERTS
18" TO 72" SPAN
CONCRETE ENDWALLS

SCALE AS SHOWN

REV. & REDR. AUG. 1999

DESIGNED	(SUBMITTED)	STATE ROAD & AIRPORT DESIGN ENGINEER	NUMBER
TRACED	(APPROVED)	CHIEF ENGINEER	1017
CHECKED			
REVISED			

GDOT Georgia Department of Transportation | P. I. No. XXXXXXX

STRAIGHT END WALL TYPE 1

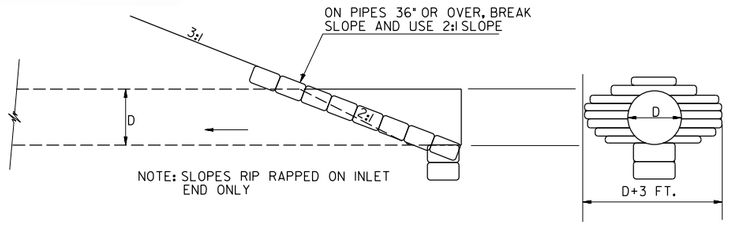

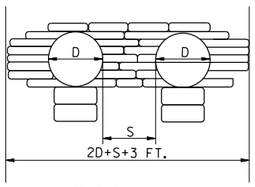

DOUBLE LINE

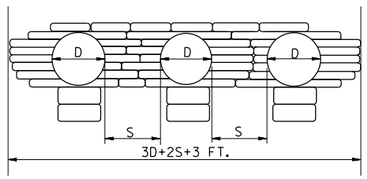

TRIPLE LINE

D = INSIDE DIAMETER OF PIPE

S = ONE INSIDE DIAMETER OF PIPE OR 3 FT. WHICHEVER IS SMALLER.

STRAIGHT END WALL TYPE 3

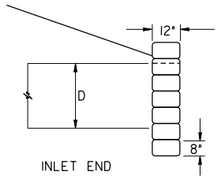

INLET END

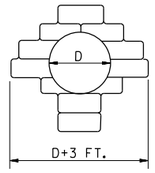

SINGLE LINE

NOTE:
SINGLE LINE SHOWN ABOVE TYPE 3 STRAIGHT END WALL MAY UTILIZE MULTIPLE LINES WITH 2D+S+3 FT.=WIDTH FOR DOUBLE LINES AND 3D+2S+3 FT.=WIDTH FOR TRIPLE LINES.

TYPE 3 STRAIGHT END WALL QUANTITIES

DIAMETER OF PIPE	AREA OPENING	SAND CEMENT BAG RIP RAP	ADD'L RIP RAP FOR EACH ADD'L PIPE
INCHES	SQ. FT.	SQ. YDS.	SQ. YDS.
18	1.767	1.5	1.0
24	3.142	1.8	1.7
30	4.909	2.2	2.5
36	7.069	2.5	3.5
42	9.621	2.8	4.2
48	12.566	3.2	4.9

NOTE: FOR APRON QUANTITIES SEE CHART BELOW.

STRAIGHT END WALL TYPE 2

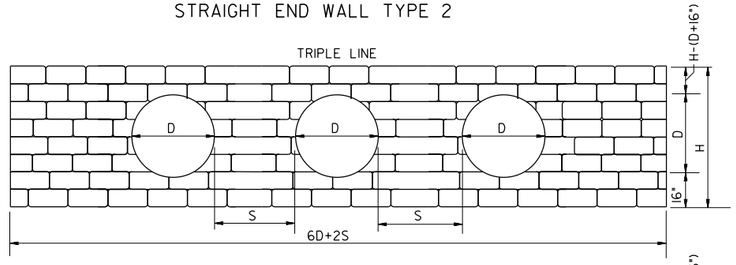

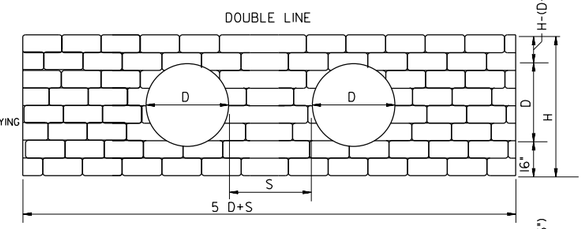

END AREA= $\frac{.8333+d}{2} \times (H-.6667)$ + e x .667=
TOTAL VOLUME= END AREA IN SQ. FT. x 4D IN FT.
PAY VOLUME=TOTAL VOLUME -VOLUME OF C.D.
VOLUME OF C.D. = $\pi r^2 \times \frac{a+b}{2}$
CONVERT CU. FT. INTO SQ. YDS. OF 8" BAG COURSES BY MULTIPLYING CU. FT. BY $\frac{1}{9}$ =0.1666

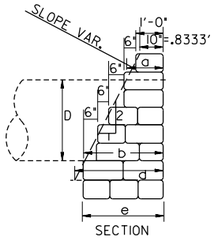

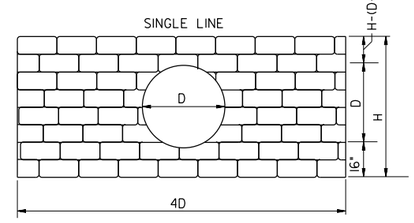

"L" TYPE END WALL - TYPE 1

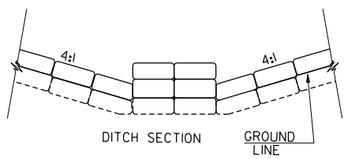

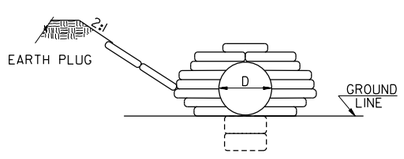

APRON FOR OUTLET END

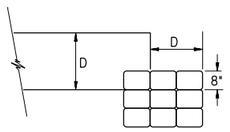

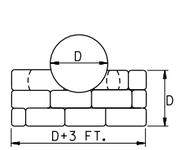

DIAMETER OF PIPE	AREA OPENING	TYPE 1 STRAIGHT END WALL QUANTITIES-ONE WALL: SAND CEMENT BAG RIP RAP	TYPE 1 STRAIGHT END WALL QUANTITIES-ONE WALL: ADDT'L RIP RAP FOR EACH ADDT'L PIPE	TYPE 1 "L" TYPE END WALL QUANTITIES-ONE WALL: SAND CEMENT BAG RIP RAP	TYPE 1 "L" TYPE END WALL QUANTITIES-ONE WALL: ADDT'L RIP RAP FOR EACH ADDT'L PIPE	TYPE 2 STRAIGHT END WALL QUANTITIES-ONE WALL: 4D LENGTH IN FEET	a	b	d	e	H: HEIGHT IN FT.& IN.	H: HT. IN BAG COURSE NO.	SAND CEMENT BAG RIP RAP	ADDT'L RIP RAP FOR EACH ADDT'L PIPE	APRON AT OUTLET: NORMAL SAND CEMENT BAG RIP RAP	APRON AT OUTLET: ADDT'L RIP RAP FOR EACH ADDT'L PIPE
INCHES	SQ.FT.	SQ.YDS.	SQ.YDS.	SQ.YDS.	SQ.YDS.		FT.	FT.	FT.	FT.			SQ. YDS.	SQ.YDS.	SQ. YDS.	SQ. YDS.
18	1.767	2.5	2.1	8.4	2.1										3.5	3.0
24	3.142	2.8	3.1	11.3	3.1										4.5	3.0
30	4.909	3.5	4.4	14.4	4.4	10	1.58	2.83	3.17	3.0	5'-4"	8	17.1	7.6	6.0	4.0
36	7.069	3.8	4.8	17.7	4.8	12	1.33	2.83	3.17	3.0	5'-4"	8	20.2	8.9	6.0	5.3
42	9.621	3.5	5.5	20.8	5.5	14	1.42	3.17	3.50	3.5	6'-0"	9	29.8	11.8	9.2	5.0
48	12.566	3.8	6.3	24.9	6.3	16	1.50	3.50	3.83	4.0	6'-8"	10	41.9	15.4	9.2	6.6
54	15.904	4.2	7.1	29.4	7.1	18	1.58	3.83	4.17	4.0	7'-4"	11	50.8	17.0	11.0	10.0
60	19.635	4.5	7.9	34.3	7.9	20	1.33	3.83	4.17	4.0	7'-4"	11	56.0	17.3	13.0	10.0
66	23.758	4.8	8.7			22	1.42	4.16	4.50	4.5	8'-0"	12	73.9	21.8	15.2	14.0
72	28.274	5.2	9.6	(BASED ON		24	1.50	4.50	4.83	5.0	8'-8"	13	95.2	26.9	15.2	14.0
78	33.183	5.8	10.0	4:1 FRONT		26	1.58	4.83	5.17	5.0	9'-4"	14	109.3	28.7	20.0	16.0
84	38.485	6.2	11.3	SLOPES AND		28	1.33	4.83	5.17	5.0	9'-4"	14	117.1	29.1	20.0	18.7
90	44.179	6.5	12.3	2:1 PLUG		30	1.42	5.17	5.50	5.5	10'-0"	15	145.8	35.3	22.5	24.0
96	50.266	6.8	13.2	SLOPE)		32	1.50	5.50	5.83	6.0	10'-8"	16	178.7	42.2	25.5	24.0
102	56.745	7.2	14.2			34	1.58	5.83	6.17	6.0	11'-4"	17	199.1	44.1	28.3	30.0
108	63.617	7.5	15.2			36	1.33	5.83	6.17	6.0	11'-4"	17	210.0	44.7	28.3	30.0

SPECIAL NOTES:

IN GENERAL, SAND CEMENT BAG RIPRAP ENDWALLS TYPE 1 ARE TO BE USED ONLY ON 18" AND 24" CROSS DRAIN PIPE. IN SPECIAL SITUATIONS, TYPE 2 ENDWALLS MAY BE USED ON 30" AND LARGER CROSS DRAIN PIPE IN LIEU OF THE DESIRED CLASS B CONCRETE HEADWALLS. NORMAL USAGE OF THIS STANDARD IS ON LOW TRAFFIC STATE AID AND FAS PROJECTS.

SAND CEMENT BAG RIPRAP TO BE IN ACCORDANCE WITH SECTION 603 OF THE STANDARD SPECIFICATIONS, EXCEPT THAT THE BAGS WILL BE 8" THICK. NORMAL SIZE OF SAND CEMENT BAG TO BE APPROXIMATELY 18"x12"x8". EACH COURSE OF BAGS TO BE WETTED SUFFICIENTLY TO ALLOW THE PROPER CEMENT REACTION.

METHOD OF MEASUREMENT: WHERE TYPE 1, 2, OR 3 SAND CEMENT BAG ENDWALLS ARE CONSTRUCTED ACCORDING TO DIMENSIONS AS SHOWN ON THE STANDARD, PAYMENT WILL BE MADE BASED ON THE NUMBER OF SQ. YDS. SHOWN ON STANDARD FOR THAT SIZE PIPE AND CONDITION. QUANTITIES SHOWN ARE BASED ON THE INSIDE DIAMETER OF PIPE. NO DEDUCTION SHALL BE MADE FOR SHELL THICKNESS OF PIPE IN COMPUTING PAY QUANTITIES.

WHERE DIMENSIONS VARY FROM THOSE SHOWN, PAY QUANTITIES WILL BE COMPUTED ACCORDING TO THE DETAIL AS SHOWN. QUANTITIES SHOWN FOR APRON AT OUTLET AND "L" TYPE ENDWALLS ARE FOR ESTIMATING PURPOSES ONLY.

PAYMENT FOR APRON AT OUTLET AND "L" TYPE ENDWALLS IS TO BE MADE ACCORDING TO QUANTITIES MEASURED AS ACTUALLY PLACED.

IN GENERAL, TYPE 3 ENDWALLS SHOULD BE USED ON 18", 24" OR 30" PIPES WHERE THE RESULTANT LENGTH OF THE CROSS DRAIN PIPE WILL BE LESS THAN IF TYPE 1 ENDWALLS WERE USED, HOWEVER IN SPECIAL SITUATIONS TYPE 3 ENDWALLS MAY BE USED ON PIPES UP TO 48" IN DIAMETER OR WHERE LONGER LENGTHS OF PIPE ARE REQUIRED.

DETAIL OF COURSE NUMBER AND ARRANGEMENT

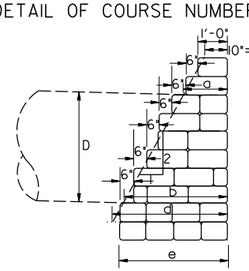

PIPE DIAMETER	COURSE NO.
30"	8
36"	8
42"	9
48"	10
54"	11
60"	11
66"	12
72"	13
78"	14
84"	14
90"	15
96"	16
102"	17
108"	17

DEPARTMENT OF TRANSPORTATION
STATE OF GEORGIA

STANDARD

SAND CEMENT BAG RIP RAP FOR END WALL AND APRON

NOT TO SCALE | REDRAWN JULY 2024 | MAY 1968

BY	REVISION	DATE
R.M.J.	SPEC. NOTE REV.	5-25-76
R.M.J.	ADD TYP. 3 STR. END WALL	7-28-72

DESIGNED R.B.S. (SUBMITTED) STATE ROAD DESIGN ENGINEER
DRAWN A.V.S.
TRACED A.V.S.
CHECKED R.B.S. (APPROVED) STATE HIGHWAY ENGINEER

NUMBER 1018B

STATE	PROJECT NUMBER	SHEET NO.	TOTAL SHEETS
GA.			

TYPE "A"

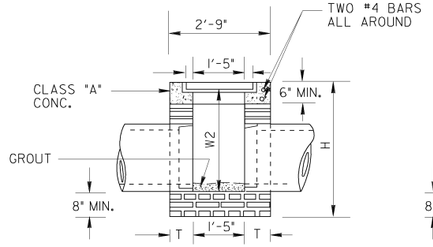

LONGITUDINAL SECTION

TYPE "B" WITH WEIR

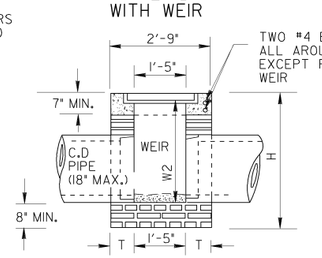

LONGITUDINAL SECTION

TYPE "C"

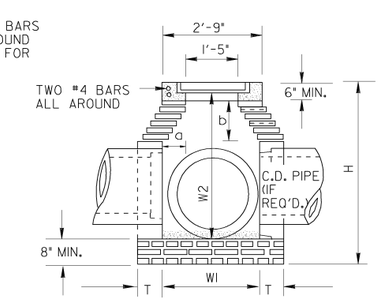

LONGITUDINAL SECTION

TYPE "C" WITH WEIR

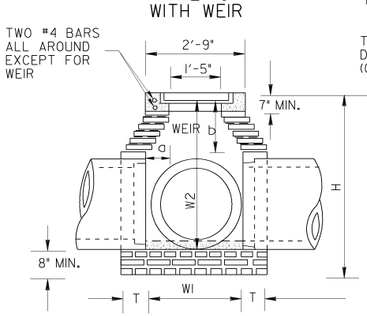

LONGITUDINAL SECTION

TYPE "D"

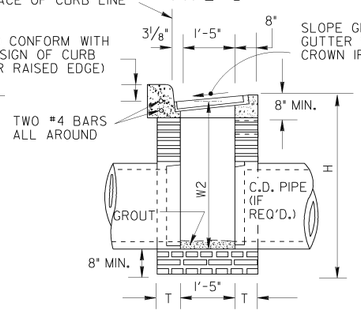

LONGITUDINAL SECTION

TYPE "E" (WITH HOOD)

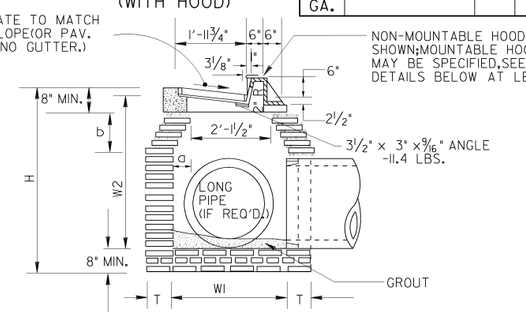

LONGITUDINAL SECTION

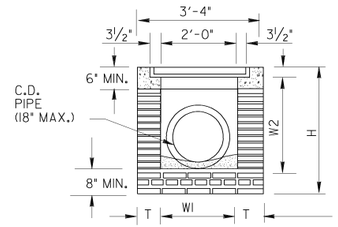

CROSS SECTION

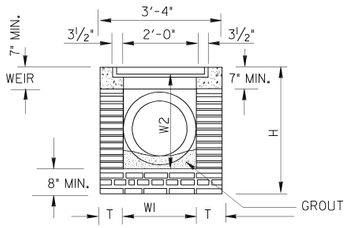

CROSS SECTION

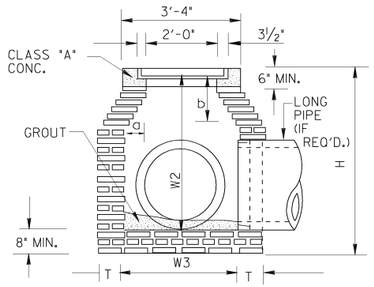

CROSS SECTION

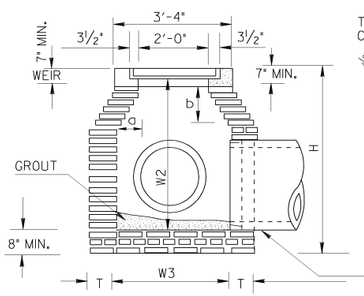

CROSS SECTION

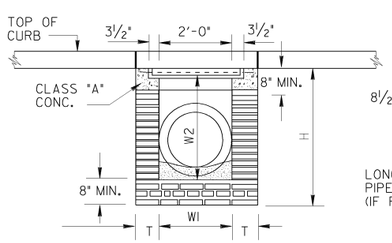

CROSS SECTION

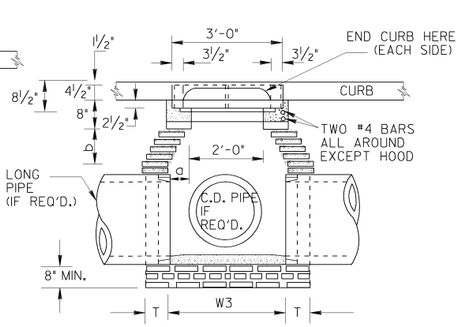

CROSS SECTION

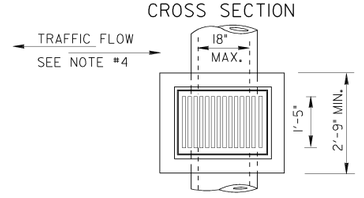

PLAN

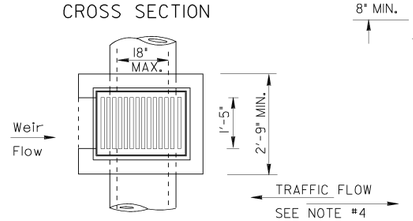

PLAN OF CONCRETE COPING SHOWING WEIR

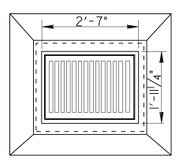

PLAN

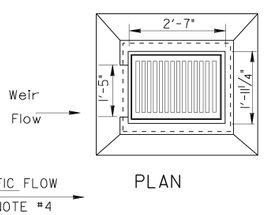

PLAN

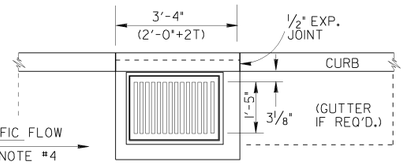

PLAN

NOTE:
FOR LARGER PIPE SIZES, TYPE "D" DROP INLET BOX WILL HAVE DETAILS AND DIMENSIONS AS SHOWN FOR TYPE "C" INLETS.

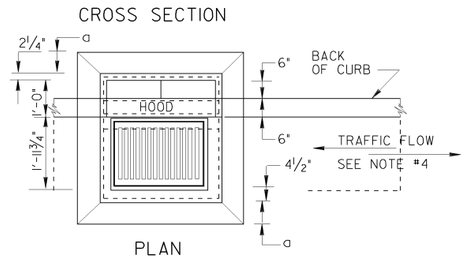

PLAN

DETAILS OF C.I. GRATING & FRAME

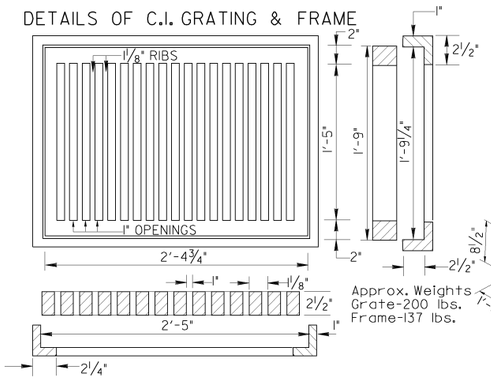

Approx. Weights
Grate-200 lbs.
Frame-137 lbs.

DETAIL OF* HOOD (NON-MOUNTABLE USE WITH TP2 CURB)

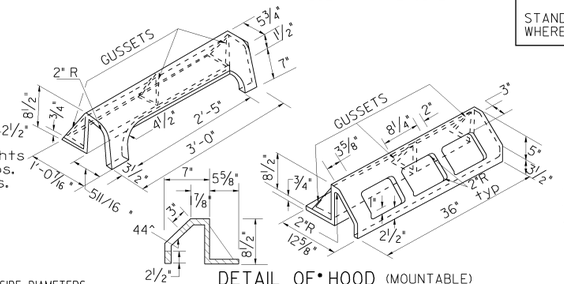

DETAIL OF* HOOD (MOUNTABLE (use with Tp 7 Curb)

BRICK WALL THICKNESSES
(FOR ALL TYPE INLETS)

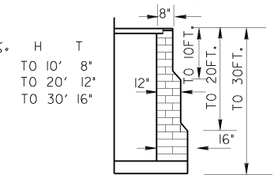

H	T
TO 10'	8"
TO 20'	12"
TO 30'	16"

* CONTRACTOR SHALL SPECIFY EITHER MOUNTABLE OR NON-MOUNTABLE TO FOUNDRY IF HOOD IS REQUIRED.

SPECIAL NOTE:
STANDARD 1019A INLETS ARE FOR USE AT LOW POINTS & WHERE HYDRAULIC LOW CAPACITY GRATES ARE SUFFICIENT. WHERE HIGHER CAPACITY GRATES ARE NEEDED ON A CONTINUOUS GRADE, STANDARD 1019B IS RECOMMENDED.

NOTE:
MINIMUM DIMENSIONS GIVEN IN TABLE BELOW ARE BASED UPON TYPICAL OUTSIDE DIAMETERS OF CONCRETE PIPES WITH NORMAL COVER AND CLEARANCES, THESE DIMENSIONS MAY BE MODIFIED IF SO DETAILED IN THE PLANS OR AS DIRECTED BY THE ENGINEER, DIMENSIONS GIVEN ARE MINIMUM EXCEPT FOR "a" WHICH IS MAXIMUM.

NOTE:
DETAILS NOT SHOWN FOR CONSTRUCTION ALTERNATES WILL BE SIMILAR TO THAT SHOWN FOR BRICK MASONRY.

CONSTRUCTION ALTERNATES

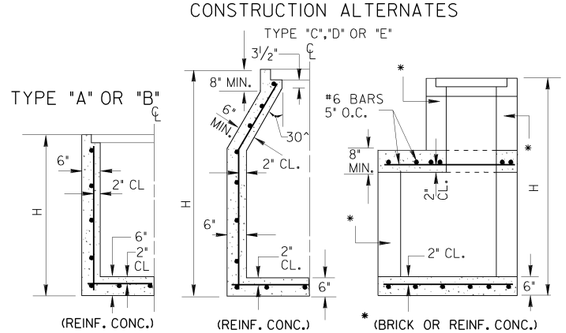

NOTE: CONCRETE WALLS WILL BE REINFORCED WITH #4 BARS 12" O.C. BOTH WAYS, BUT WHERE H IS OVER 9 FT., AND PIPE IS OVER 30" I.D., THE HORIZONTAL STEEL, WHICH IS MORE THAN 9 FT. DEEP WILL BE INCREASED TO 6" SPACINGS. 6" CONC. BOTTOM SLABS WILL BE REINFORCED WITH #4 BARS 12" O.C. BOTH WAYS.

NOTE: FOR PRECAST ALTERNATES, SEE STD. 1019-A PRECAST AND/OR STD. 1040 PRECAST AND BUILT-IN-PLACE COMPONENTS MAY BE USED IN COMBINATIONS WHICH PROVIDE PROPER FITS AND STRUCTURAL ADEQUACY.

GENERAL NOTES:

1. SPECIFICATIONS:GEORGIA STANDARD AND CURRENT EDITION, AND SUPPLEMENTS THERETO.
2. ½" EXPANSION JOINT WILL BE REQUIRED WHERE RIGID PAVEMENT, CONCRETE SIDEWALK OR CONCRETE GUTTER MEETS DROP INLETS.
3. ALIGNMENT, NUMBER AND SIZES OF PIPES SHOWN ARE ONLY TYPICAL, SEE PLANS FOR ACTUAL PIPE CULVERT REQUIREMENTS.
4. ALL TYPE DROP INLETS WILL BE CONSTRUCTED (AS SHOWN), SO THAT THE GRATE BARS ARE PERPENDICULAR TO THE FLOW OF TRAFFIC EXCEPT ON LIMITED ACCESS PROJECTS OR WHERE BICYCLES ARE PROHIBITED.
5. BRICK MASONRY WITH CLASS "A" CONC. TOP PORTION IS SHOWN AS STANDARD CONSTRUCTION WITH ALTERNATES PERMITTED AS SHOWN, BOTTOM SLAB MAY BE 8" MIN. NON-REINFORCED CONCRETE, 8" BRICK OR 6" MIN. REINFORCED CONCRETE, SEE APPLICABLE STANDARDS FOR ALTERNATE PRECAST CONSTRUCTION.

TABLE OF MINIMUM DIMENSIONS FOR DROP INLETS

D	TYPES"A" or "B" BRICK OR REINF. CONC.			TYPE "C" OR"D" (BRICK)						TYPE "E" (BRICK)						TYPE"C","D" OR"E" (REINFORCED CONCRETE)						
	WI	W2	H(min)	WI	W2	W3	a (MAX.)	b	H(min.)	WI	W2	W3	a (MAX.)	b	H(min.)	WI type"C"	WI type"E"	W2	W3	a (MAX.)	b	H(min.)
15"	2'- 0"	2'- 7"	3'-3½"	2'-2⅛"	2'-11"	2'-9⅛"	0'-4⅜"	0'-7⅞"	3'-9½"	3'-2⅛"	3'- 1"	3'-0⅝"	0'-7⅜"	1'-1⅛"	3'-11½"	2'- 0"	2'- 1"	2'- 7"	2'- 0"	3½"	6"	3'- 6"
18"	2'- 0"	2'-10"	3'- 7"	2'-2⅛"	3'-2½"	2'-9⅛"	0'-4⅜"	0'-7⅞"	4'-1"	3'-2⅛"	3'-4½"	3'-0⅝"	0'-7⅜"	1'-1⅛"	4'- 1"	2'- 0"	2'- 1"	3'- 0"	2'- 0"	3½"	6"	3'-11"
24"	~	~	~	2'-8⅛"	3'-3⅛"	3'-3⅛"	0'-7⅜"	1'-1⅛"	4'- 9"	3'-2⅛"	3'-11½"	3'-0⅝"	0'-7⅜"	1'-1⅛"	4'-8⅛"	2'- 8"	2'- 9"	3'- 8"	2'- 6"	6½"	11¼"	4'- 7"
30"	~	~	~	3'-7¼"	4'-0¼"	3'-10⅛"	1'-0⅛"	1'- 9"	5'-10"	3'-5½"	4'-8⅜"	3'- 4"	0'- 8"	1'-1⅞"	5'-6⅞"	3'- 4"	3'- 6"	4'- 9"	3'- 0"	9½"	16½"	5'-10"
36"	~	~	~	4'-1⅞"	6'-0⅝"	4'-8⅜"	1'-4⅞"	2'-2¼"	6'-11⅛"	3'-11½	5'-8⅜"	3'-10"	0'-11"	1'-7⅛"	6'-7½"	3'-10"	4'- 0"	5'-10"	3'- 9"	1'- 2"	2'- 0"	6'-10"
42"	~	~	~	4'-5 "	7'-1¾"	5'- 0"	1'- 6"	2'-7⅞"	8'-0¼"	4'-6½"	7'-5 11/16 "	4'- 5"	1'-2½"	2'-1⅜"	8'-4⅜"	4'- 5"	4'- 6"	7'- 0"	4'- 3"	1'- 5"	2'-5½"	7'-11"
48"	~	~	~	5'- 0"	8'-2⅜"	5'- 7"	1'-9½"	3'-1¼"	9'-1¼"	5'-1½"	8'-6 11/16 "	5'- 0"	1'- 6"	2'-7⅜"	9'-5⅜"	5'- 0"	5'- 0"	8'- 2"	5'- 0"	1'-9½"	3'-1½"	9'- 2"
54"	~	~	~	5'- 7"	9'- 4"	6'- 2"	2'- 1"	3'-7½"	10'-2½"	5'-8½"	9'-7¾"	5'- 7"	1'-9½"	3'-1¼"	10'-6¼"	5'- 6"	5'- 6"	9'- 2"	5'- 6"	2'-0½"	3'-6½"	10'- 0"
60"	~	~	~	6'- 2"	1'-4⅞"	6'- 9"	2'-4½"	4'-1⅜"	11'-3¼"	6'-3½"	10'-8 11/16 "	6'- 2"	2'- 1"	3'-7⅝"	1'-7 5/16"	6'- 0"	6'- 0"	10'- 3"	6'- 0"	2'-3½"	4'- 0"	11'- 1"

	DATE	DEPARTMENT OF TRANSPORTATION STATE OF GEORGIA	
	REVISION	STANDARD DROP INLETS (BUILT-IN-PLACE)	
		SCALE AS SHOWN REV. & REDR. AUG., 1999	
BY	DES. ____ REV. ____ TRA. ____ CHK. ____	(SUBMITTED) James A. Kemp STATE ROAD & AIRPORT DESIGN ENGR. (APPROVED) Paul L. Liebelt CHIEF ENGINEER	NUMBER 1019A

STATE	PROJECT NUMBER	SHEET NO.	TOTAL SHEETS
GA.			

NOTE:
SEE STANDARD 1019-A- BRICK DROP INLETS- FOR DETAIL OF GRATING FRAME,HOOD,ETC., WHERE NEEDED.

TYPE "A"

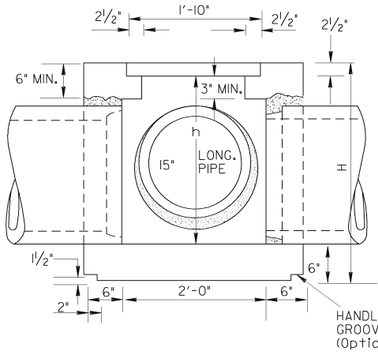

TYPE "B" WITH WEIR

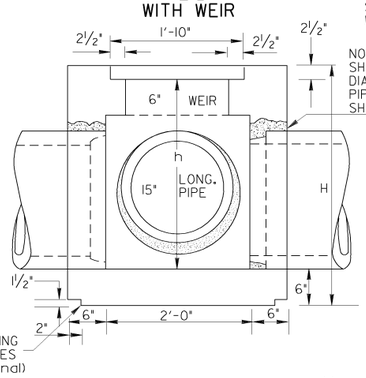

NOTE: OPENING FOR PIPE SHALL BE THE OUTSIDE DIAMETER OF THE REQ'D PIPE PLUS 1" MIN..OPENING SHALL HAVE CORRUGATIONS

TYPE "C" (WITH OR WITHOUT WEIR)

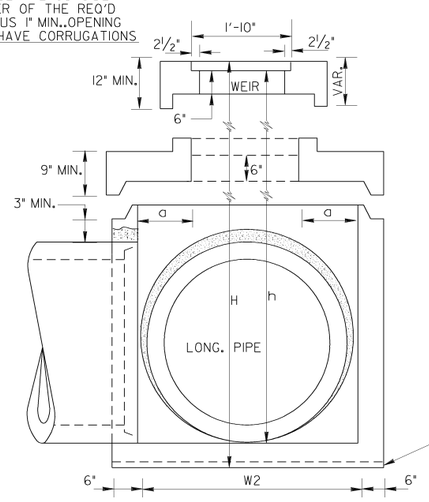

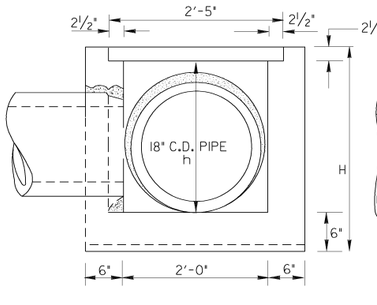

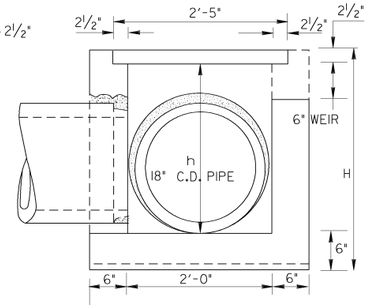

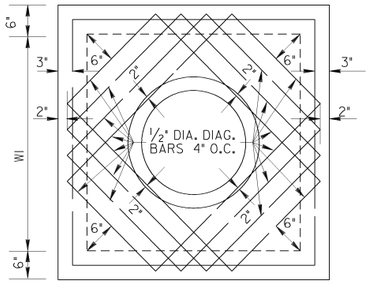

SCALE: ¾" =1

FOR OTHER DETAILS, SEE TYPE "B"

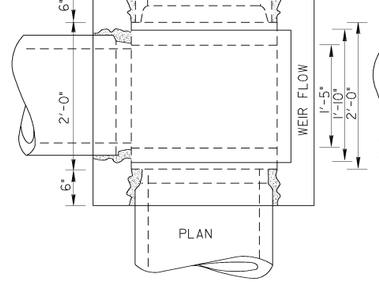

SCALE: 1" =1'

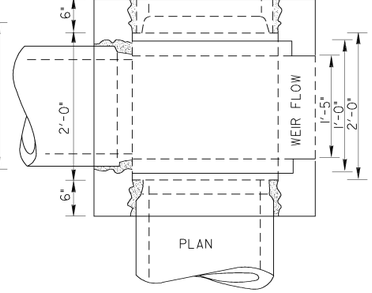

SCALE: 1" =1'

TYPE "E"

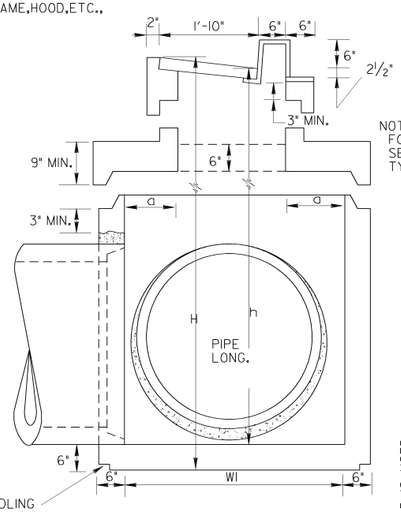

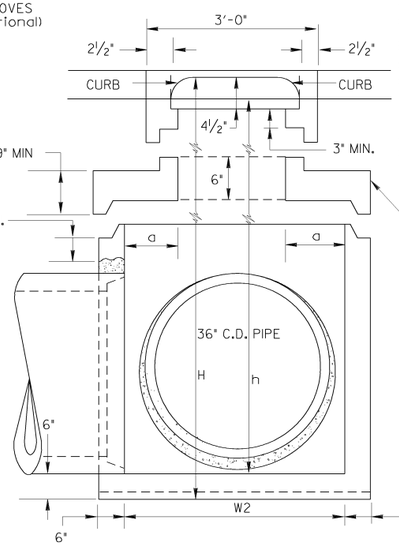

IF THIS SWIVEL SECTON SLAB IS USED TO REDUCE THE W OR WIDIMENSIONS, INCREASE THE MIN. THICKNESS TO 9" AND USE REINF. STEEL SHOWN UNDER TYPE "C"

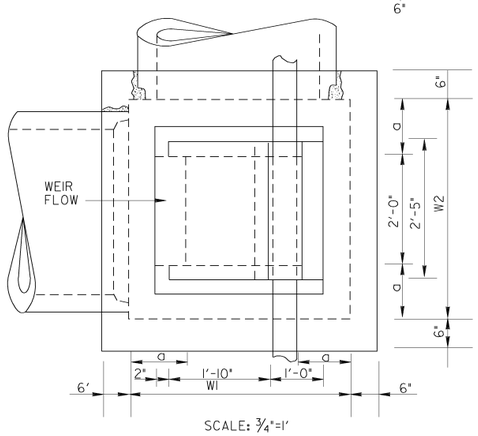

SCALE: ¾"=1'

ISOMETRIC VIEW OF DROP INLET TYPE "C" OR "E" FOR PIPES LARGER THAN 18"(WITH OR WITHOUT WEIR)

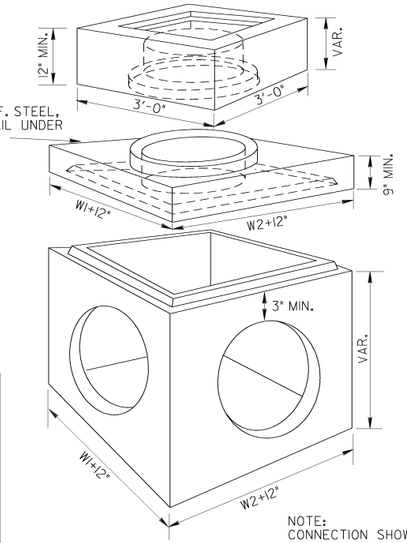

NOTE:
FOR REINF. STEEL, SEE DETAIL UNDER TYPE "C"

NOTE:
CONNECTION SHOWN ABOVE FOR USE WHERE CONCRETE OUTLET PIPE DOES NOT HAVE BELL OR HUB END PROVIDED AT STRUCTURE OUTLET.

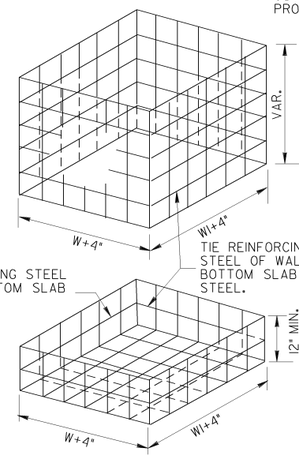

METHOD OF CONNECTING PIPE

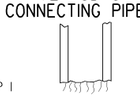

STEP 1

CUT CONCRETE PIPE LEAVING APPROXIMATELY 3" OF REINFORCING MESH EXPOSED.

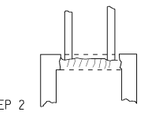

STEP 2

POSITION PIPE APPROXIMATELY 3" INTO OPENING OF WALL.

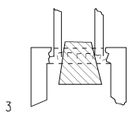

STEP 3

POSITION CONICAL CORE INSIDE OF PIPE AND SEAL WITH GROUT (1/2" MIN. THICKNESS OF GROUT). REMOVE CORE WHEN SET AND RUB GROUT TO SEAL JOINTS.

ALTERNATE METHOD OF CONNECTION SKEWED PIPE

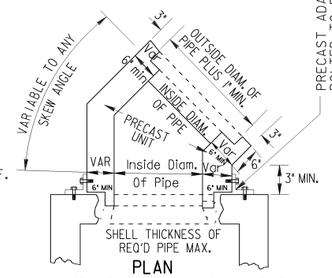

PLAN

ALTERNATE METHODS OF CONNECTING SKEWED PIPES MAY INCLUDE PIPE ELBOWS OR CIRCULAR PRECAST BASE UNITS. SEE SEPARATE STANDARDS.

NOTE: REINFORCING STEEL SHALL BE No. 4 STEEL BARS AT 12" O.C. BOTH WAYS OR EQUIVALENT WIRE FABRIC REINFORCING.

SPECIAL NOTE:
STANDARD 1019A INLETS ARE FOR USE AT LOW POINTS AND WHERE HYDRAULIC LOW CAPACITY GRATES ARE SUFFICIENT. WHERE HIGHER CAPACITY GRATES ARE NEEDED ON A CONTINUOUS GRADE, STANDARD 1019B IS RECOMMENDED.

DIMENTIONS FOR DROP INLETS

PIPE SIZE	TYPE "A"		TYPE "B"		TYPE "C"				TYPE "E"			
	MIN. h	MIN. H	MIN. h	MIN. H	Wlor W2	a	MIN. h	MIN. H	Wlor W2	a	MIN. h	MIN. H
15"	2'- 0"	2'-8½"	2'- 7"	3'-3½"	2'- 0"		2'-7"	3'-3½"	2'- 0"		2'-7"	3 - 3½"
18"	2'-3½"	3'- 0"	2'-10"	3'-6½"	2'- 0"		2'-10"	3'-6½"	2'- 0"		2'-10"	3 - 6½"
24"					3'- 0"	0'- 6"	4'- 3½"	5'- 0"	3'- 0"	0'- 6"	4'- 7"	5 - 3 "
30"					3'- 6"	0'- 9"	4'-10½"	5'- 7"	3'- 6"	0'- 9"	5'- 2"	5 - 10"
36"					4'- 0"	1'- 0"	5'- 5½"	6'- 2"	4'- 0"	1'- 0"	5'- 9"	6 - 3 "
42"					4'- 6"	1'- 3"	6'-1½"	6'- 8"	4'- 6"	1'- 3"	6'- 4"	7 - 0 "
48"					5'- 0"	1'- 6"	6'- 7½"	7'- 3"	5'- 0"	1'- 6"	6'- 11"	7 - 7 "
54"					5'- 6"	1'- 9"	7'- 2½"	7'-10"	5'- 6"	1'- 9"	7'- 6"	8 - 2 "
60"					6'- 0"	2'- 0"	7'- 9½"	8'- 5"	6'- 0"	2'- 0"	8'- 1"	8 - 9 "

NOTE:
SEE STANDARD 1019A (BRICK) AND STANDARD 1040 FOR CONSTRUCTION ALTERNATES BRICK MASONRY AND CIRCULAR PRECAST SECTIONS RESPECTIVELY.

DEPARTMENT OF TRANSPORTATION
STATE OF GEORGIA

STANDARD PRECAST DROP INLETS

SCALE AS SHOWN — AUG. 1999

DESIGNED ____ (SUBMITTED) James A. Kemp
DRAWN ____ STATE ROAD & AIRPORT DESIGN ENGINEER
TRACED ____ (APPROVED) Frank L. Daniels
CHECKED ____ CHIEF ENGINEER

DATE | REVISION | BY

NUMBER 1019A PRECAST

STATE	PROJECT NUMBER	SHEET NO.	TOTAL SHEETS
GA.			

(DROP INLET TYPE V-1 OR TYPE V-2:)

REDUCER SLABS OR BRICK TAPER (bottom left) ARE FOR USE WITH LARGER PIPES. IN GENERAL THIS WILL BE CROSS DRAIN PIPES OVER 24", LONGITUDINAL PIPES OVER 18" (Type V-1) AND LONGITUDINAL PIPES OVER 15" (Type V-2)

DROP INLET TYPE V-1 (WITH HOOD)

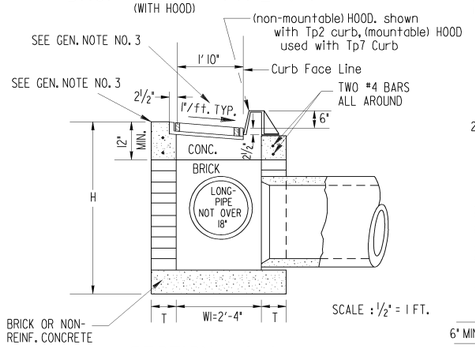

SECTION A-A
(SEE GEN. NOTE NO. 7)

SCALE : ½" = 1 FT.

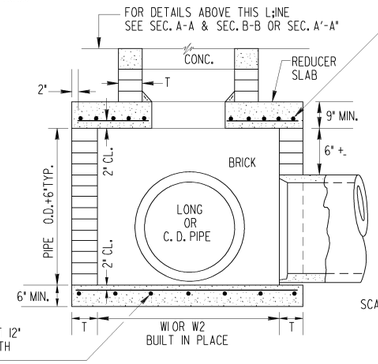

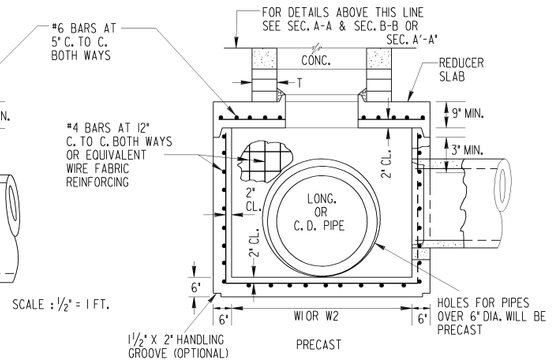

SCALE : ½" = 1 FT.

DETAIL OF REDUCING W1 OR W2 DIMENSIONS WITH REDUCER SLAB.

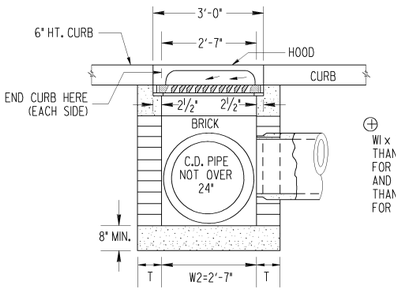

⊕ W1 x W2 NOT LESS THAN 2'-4" x 2'-7" FOR TYPE V-1 AND NOT LESS THAN 1'-8" x 2'-7" FOR TYPE V-2

MINIMUM W1, W2 AND H DIMENSIONS			
PIPE SIZE	W1(MIN.)OR W2(MIN.) BRICK	W1(MIN.)OR W2(MIN.) REINF. CONC.	H (MIN.)
15"	⊕ 1'-8"	⊕ 1'-8"	3'-10"
18"	⊕ 2'-0"	⊕ 2'-0"	4'-2"
24"	2'-7"	2'-7"	4'-9"
30"	3'-4"	3'-6"	5'-10"
36"	3'-10"	4'-0"	6'-5"
42"	4'-5"	4'-6"	7'-0"
48"	5'-0"	5'-0"	7'-10"
54"	5'-7"	5'-6"	8'-5"
60"	6'-2"	6'-0"	9'-0"

NOTE:
THE MINIMUM H DIMENSIONS SHOWN ARE BASED ON TYPICAL OUTSIDE DIAMETERS OF PIPES AND MAY BE MODIFIED WHERE THE ENGINEER OR DESIGNER DETERMINES THAT CONDITIONS PERMIT.
IT IS NOT NECESSARY THAT THE BOX TYPE BASE BE SQUARE. W1 AND W2 DIMENSIONS WILL VARY ACCORDING TO PIPE SIZE.

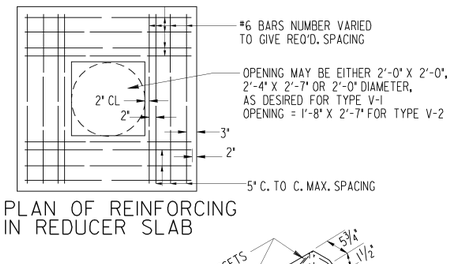

PLAN OF REINFORCING IN REDUCER SLAB

SECTION B-B

SCALE : ½" = 1 FT.

BRICK WALL THICKNESS	
H	T (MIN.)
TO 10'	8"
10' TO 20'	12"
20' TO 30'	16"

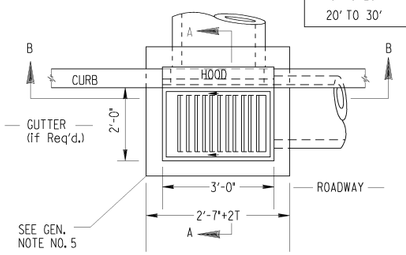

PLAN VIEW

SCALE : ½" = 1 FT.

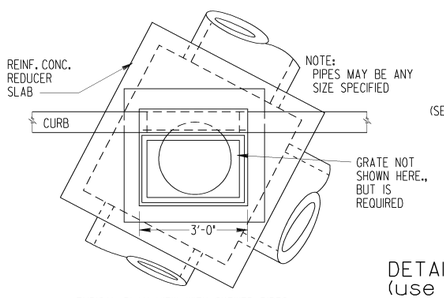

TYPICAL PLAN VIEW WITH SKEWED PIPES

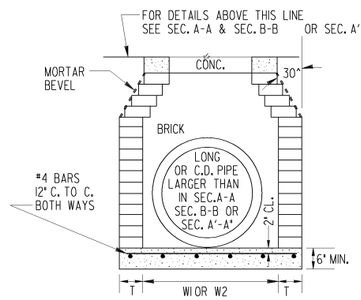

ALTERNATE-REDUCTION OF W1 OR W2 DIMENSIONS WITH BRICK MASONRY

SCALE : ½" = 1 FT.

MINIMUM H DIMENSIONS (FOR DETAIL AT LEFT)	
PIPE SIZE	H (MIN.)
18"	4'-2"
24"	4'-9"
30"	5'-9"
36"	6'-9"
42"	7'-10"
48"	8'-11"
54"	10'-0"
60"	11'-2"

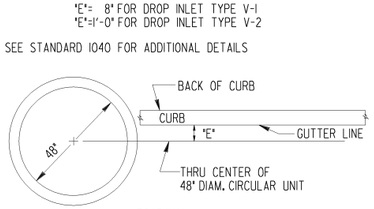

NOTE: STD. 1040 ALTERNATE PERMITTED WITH ANY PIPE SIZE OR SKEW.

ALTERNATE - STANDARD 1040 CIRCULAR SECTIONS - PLAN VIEW LOCATION.

NO SCALE

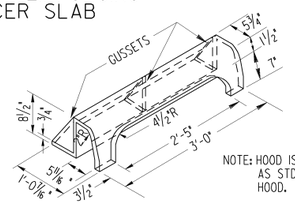

DETAIL OF ✳HOOD (non-mountable)
(use with Tp2 Curb)

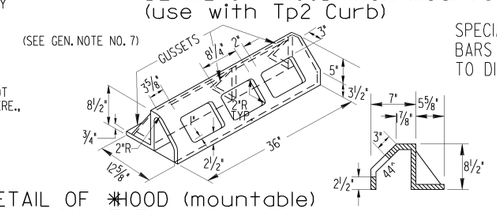

DETAIL OF ✳HOOD (mountable)
(use with Tp7 Curb)

✳ CONTRACTOR SHALL SPECIFY EITHER MOUNTABLE OR NON-MOUNTABLE TO FOUNDRY IF HOOD IS REQUIRED.

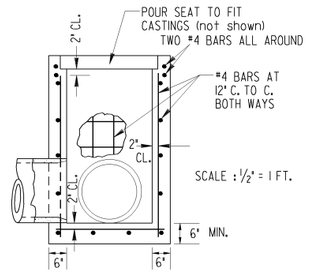

ALTERNATE- CAST-IN-PLACE REINFORCED CONCRETE

GRATE AND FRAME DETAILS

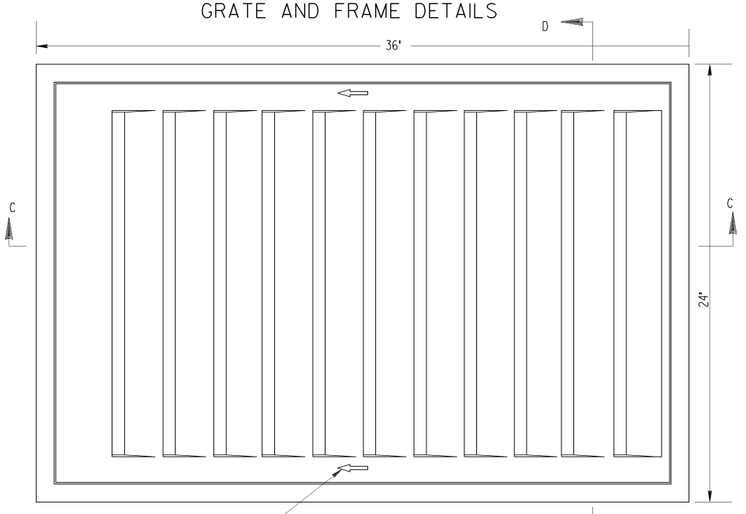

PLAN VIEW

SCALE : ¼" = 1"

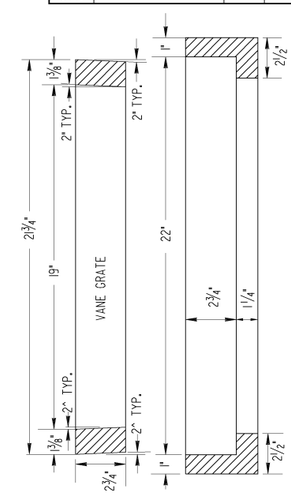

SECTION D-D

RAISED OR RECESSED ARROWS INDICATE DIRECTION OF HYDRAULIC FLOW. DESIGN OF ARROWS IS MANUFACTURE'S CHOICE.

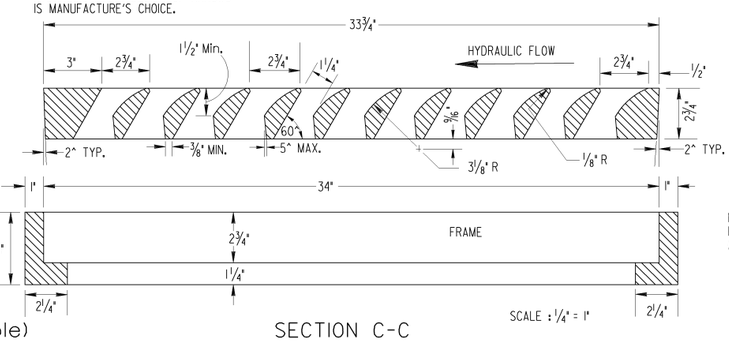

SECTION C-C

MATERIAL FOR GRATE: GRAY IRON, A.S.T.M. A-48 CLASS 30.

NOTE:
FRAME IS SAME AS GA. STD. 1010 OR CITY OF ATLANTA FRAME. TYPE B

SPECIAL NOTE:
BARS OF GRATE WILL BE PERPENDICULAR TO DIRECTION OF TRAFFIC FLOW.

DROP INLET TYPE V-2 (without hood)

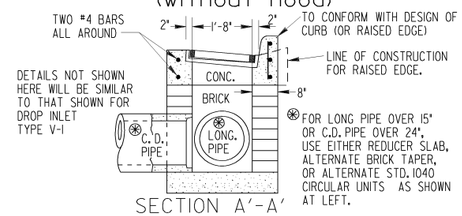

SECTION A'-A'

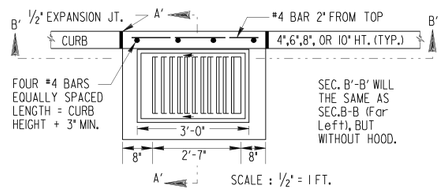

SCALE : ½" = 1 FT.

PLAN VIEW

GENERAL NOTES:

1. SPECIFICATIONS: GEORGIA STANDARD AND/OR SPECIAL PROVISIONS EXCEPT THAT VANE GRATE WILL BE GRAY IRON A.S.T.M. A-48 CLASS 30.
2. ALIGNMENT, NUMBER AND SIZES OF PIPES SHOWN ARE ONLY TYPICAL. SEE PLANS FOR ACTUAL PIPE CULVERT REQUIREMENTS.
3. SLOPE OF GRATE WILL MATCH GUTTER SLOPE WHEN USED WITH CURB AND GUTTER. SLOPE OF GRATE WILL MATCH ROADWAY SLOPE, WHERE THERE IS NO GUTTER (I.E., HEADER CURB, INTEGRAL CURB, ETC.). TOP OF HOOD WILL BE FLUSH WITH TOP OF CURB FOR TYPE V-1.
4. CONCRETE WILL BE CLASS "A" CONCRETE.
5. ½" EXPANSION JOINTS WILL BE REQUIRED IF RIGID PAVEMENT, SIDEWALK OR CONCRETE GUTTER MEETS DROP INLETS.
6. ALL STRUCTURES OVER 4 FT. DEEP SHALL REQUIRED STEPS OF A TYPE APPROVED BY THE MATERIALS LABORATORY OR ¾" DIA. BARS STEPS AS SHOWN FOR OTHER INLET TYPES. NUMBER AND LOCATION OF STEPS SHALL BE AS DIRECTED BY THE ENGINEER.
7. METAL HOODS DO NOT IMPROVE HYDRAULICS OF INLETS. TYPE V-1 DROP INLETS ARE NORMALLY USED TO PROVIDE CONTINUITY OF CURB OR TO ALLOW LARGER BOX WITHOUT TAPER OR REDUCER SLAB.

DEPARTMENT OF TRANSPORTATION
STATE OF GEORGIA

STANDARD

DROP INLET TYPES V-1 AND V-2

SCALE AS SHOWN — AUGUST, 1999

DATE	REVISION	BY
		DES. ____
		DRW. ____
		TRA. ____
		CHK. ____

(SUBMITTED) James A. Granat — STATE ROAD & AIRPORT DESIGN ENGR.

(APPROVED) Genl L Forbes — CHIEF ENGINEER

NUMBER 1019B

GDOT Georgia Department of Transportation | P. I. No. XXXXXXX

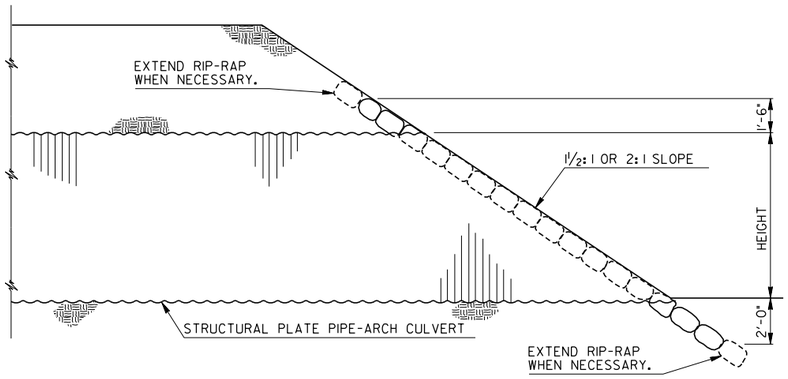

SECTION ON ℄

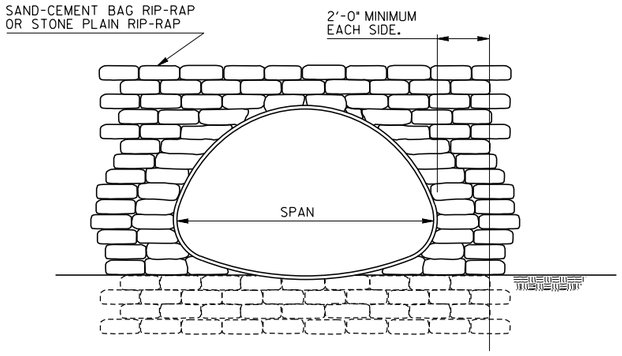

ELEVATION

BEVELED END STRUCTURAL PLATE PIPE-ARCH

STRUCTURAL PLATE PIPE		
DIA. INCHES	RIP-RAP QUANTITY ONE END SQ.-YDS.	
	1½ : 1	2 : 1
72	13.4	16.6
78	14.4	17.9
84	15.5	19.3
90	16.5	20.5
96	17.6	21.9
102	18.6	23.1
108	19.7	24.5
114	20.9	26.0
120	22.0	27.3
126	23.2	28.8
132	24.5	30.4
138	25.7	31.9
144	27.0	33.5
150	28.2	35.0
156	29.6	36.6
162	31.0	38.4
168	32.3	40.0
174	33.7	41.7
180	35.0	43.4

STRUCTURAL PLATE PIPE - ARCH			
SPAN FT.- IN.	HEIGHT FT.- IN.	RIP-RAP QUANTITY ONE END SQ.-YDS.	
		1½ : 1	2 : 1
6-1	4-7	11.9	14.8
6-4	4-9	12.3	15.2
6-9	4-11	12.9	16.0
7-0	5-1	13.3	16.5
7-3	5-3	13.5	16.8
7-8	5-5	14.2	17.7
7-11	5-7	14.7	18.2
8-2	5-9	14.9	18.5
8-7	5-11	15.7	19.5
8-10	6-1	16.0	19.9
9-4	6-3	16.8	20.9
9-6	6-5	17.0	21.1
9-9	6-7	17.3	21.5
10-3	6-9	18.2	22.6
10-8	6-11	19.0	23.6
10-11	7-1	19.4	24.1
11-5	7-3	20.4	25.3
11-7	7-5	20.7	25.6
11-10	7-7	20.9	25.9
12-4	7-9	22.0	27.3
12-6	7-11	22.1	27.4
12-8	8-1	22.4	27.8
12-10	8-4	22.9	28.3
13-5	8-5	23.8	29.5
13-11	8-7	24.7	30.7
14-1	8-9	24.9	30.9
14-3	8-11	25.2	31.2
14-10	9-1	26.4	32.8
15-4	9-3	27.5	34.2
15-6	9-5	27.8	34.5
15-8	9-7	27.9	34.6
15-10	9-10	28.5	35.4
16-5	9-11	29.7	36.8
16-7	10-1	29.7	36.9

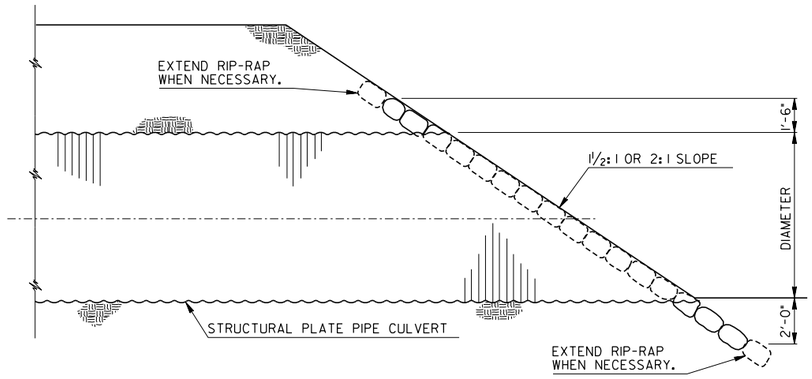

SECTION ON ℄

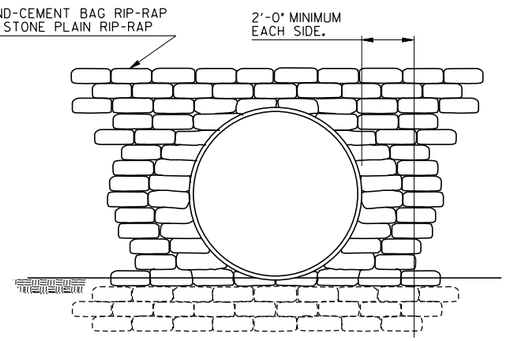

ELEVATION

BEVELED END STRUCTURAL PLATE PIPE

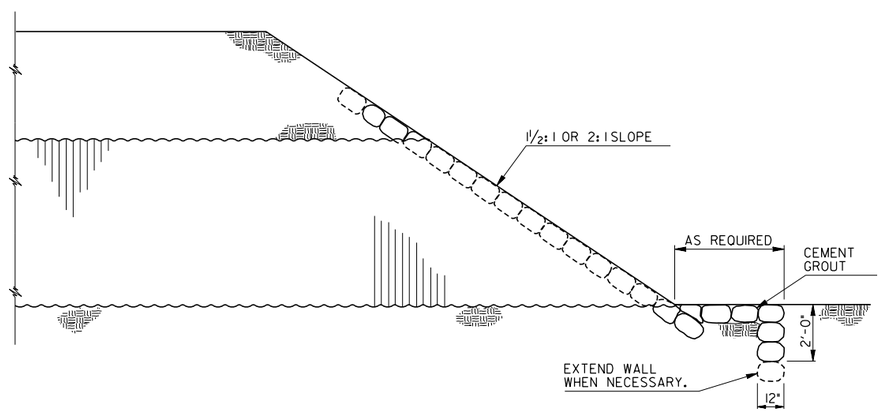

DETAIL OF APRON FOR OUTLET END OF PIPE AND PIPE-ARCH

USE ONLY WHEN NECESSARY

	2-15-66	DATE	STATE HIGHWAY DEPARTMENT OF GEORGIA ENGINEERING DEPARTMENT
	DELETE GENERAL NOTES	REVISION	STANDARD RIP-RAP FOR STRUCTURAL PLATE PIPE & PIPE-ARCH CULVERTS
			NOT TO SCALE — REDRAWN JULY 2024 — JULY 1957
A.V.S.	BY		DESIGNED ____ DRAWN ____ TRACED ____ CHECKED ____ (SUBMITTED) ROAD DESIGN ENGINEER (APPROVED) STATE HIGHWAY ENGINEER — NUMBER 1029A

STATE	PROJECT NUMBER	SHEET NO.	TOTAL SHEETS
GA.			

NORMAL BACKFILL

BACKFILL, AS SHOWN BY THE BROKEN LINE SECTIONS, SHALL CONSIST OF PLACING COMPACTABLE SOIL IN 6" (LOOSE) LAYERS AND COMPACTING EACH LAYER (ACCORDING TO GEORGIA STANDARD SPECIFICATIONS) ON BOTH SIDES OF PIPE FOR ITS FULL LENGTH. MEASUREMENT AND PAYMENT WILL BE MADE UNDER ROADWAY EXCAVATION ITEMS FOR FORMATION OF EMBANKMENTS.

NORMAL EMBANKMENT SHALL BE PLACED A MINIMUM OF 12' WIDE ON EACH SIDE OF THE PIPE AND AT LEAST THE MIN. COVER OVER THE PIPE AND COMPACTED TO THE REQUIRED DENSITY BEFORE EQUIPMENT IS ALLOWED TO CROSS.

AFTER BACKFILL HAS BEEN COMPACTED, THE BALANCE OF THE FILL UP TO GRADE LINE SHALL BE CONSTUCTED IN ACCORDANCE WITH EMBANKMENT SPECIFICATIONS

LONGITUDINAL SECTION OF IMPERFECT TRENCH BACKFILL AND BACKFILL METHODS

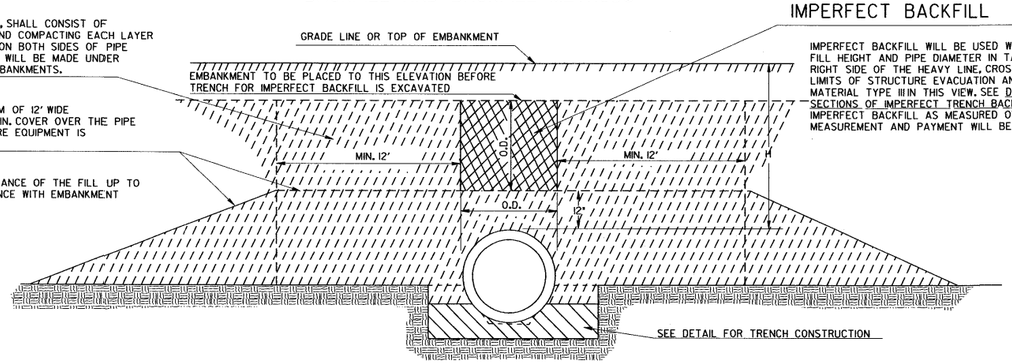

IMPERFECT BACKFILL

IMPERFECT BACKFILL WILL BE USED WITH CONCRETE PIPE IF FILL HEIGHT AND PIPE DIAMETER IN TABLE NO. I FALLS ON THE RIGHT SIDE OF THE HEAVY LINE. CROSS HATCHED AREA SHOWS LIMITS OF STRUCTURE EVACUATION AND IMPERFECT BACKFILL MATERIAL TYPE III IN THIS VIEW. SEE DETAILS BELOW CROSS SECTIONS OF IMPERFECT TRENCH BACKFILL FOR LIMITS OF IMPERFECT BACKFILL AS MEASURED OVER THE PIPE LENGTHWISE. MEASUREMENT AND PAYMENT WILL BE CONFINED TO THESE LIMITS.

MULTIPLE PIPE CULVERT SPACING

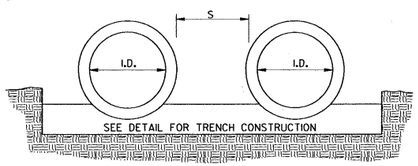

S=ONE INSIDE DIAMETER OF PIPE, OR 3 FEET, WHICHEVER IS SMALLER.
FOR PIPE ARCH CULVERTS, SUBSTITUTE SPAN FOR INSIDE DIAMETER.

NOTE:
FOR MULTIPLE LINES OF C.M. PIPE WITH METAL FLARED END SECTIONS, S MAY BE INCREASED ENOUGH TO AVOID OVERLAP OF END SECTION WINGTIPS. LOCATION OF METAL END SECTION SHOULD BE DETERMINED BEFORE PLACEMENT OF PIPE.

CROSS SECTIONS OF IMPERFECT TRENCH BACKFILL

CROSS HATCHED AREAS SHOW LIMITS OF CONSTRUCTION & MEASUREMENT FOR STRUCTURE EXCAVATION & IMPERFECT TRENCH BACKFILL MATERIAL, TYPE III

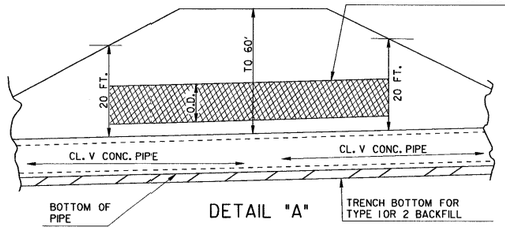

DETAIL "A"

(FOR CONCRETE PIPE DIAMETERS 78" & 84", WITH FILL HEIGHTS OVER 20 FT.)

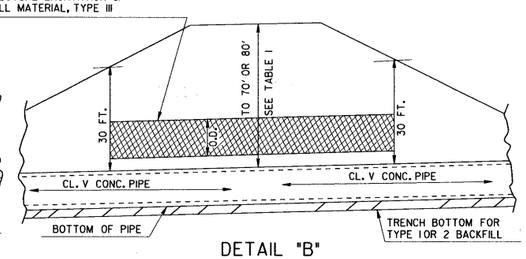

DETAIL "B"

(FOR CONCRETE PIPE DIAMETERS 72" AND LESS WITH FILL HEIGHTS OVER 30 FT.)

TRENCH CONSTRUCTION FOR SIDE DRAIN

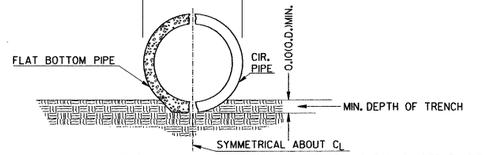

NOTE: THE PIPE SHALL BE BEDDED TO LINE AND GRADE IN A FIRM FOUNDATION SHAPED TO FIT THE LOWER PART OF THE PIPE EXTERIOR. WHERE ROCK EXISTS, EXCAVATE AND BACKFILL WITH COMPRESSABLE MATERIAL (UNCLASSIFIED EXCAVATION) A MINIMUM OF 6" BELOW THE PIPE.

TRENCH CONSTRUCTION FOR STORM DRAIN.

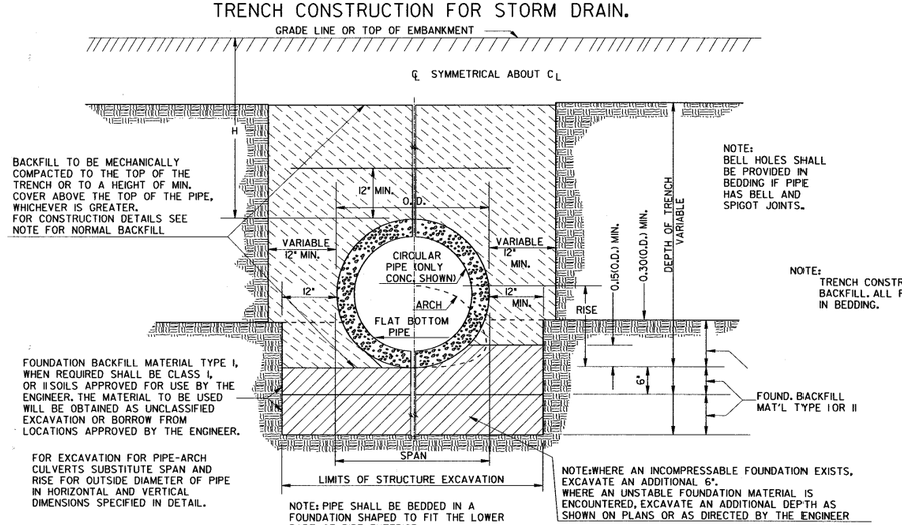

NOTE: PIPE SHALL BE BEDDED IN A FOUNDATION SHAPED TO FIT THE LOWER PART OF PIPE EXTERIOR.

NOTE: WHERE AN INCOMPRESSABLE FOUNDATION EXISTS, EXCAVATE AN ADDITIONAL 6". WHERE AN UNSTABLE FOUNDATION MATERIAL IS ENCOUNTERED, EXCAVATE AN ADDITIONAL DEPTH AS SHOWN ON PLANS OR AS DIRECTED BY THE ENGINEER

NOTE:
BELL HOLES SHALL BE PROVIDED IN BEDDING IF PIPE HAS BELL AND SPIGOT JOINTS.

NOTE:
TRENCH CONSTRUCTION IS REQUIRED FOR BOTH NORMAL OR IMPERFECT BACKFILL. ALL PIPES WITH BELL & SPIGOT JOINTS SHALL HAVE BELL HOLES IN BEDDING.

DETAIL SHOWING MINIMUM COVER FOR PIPE CULVERTS

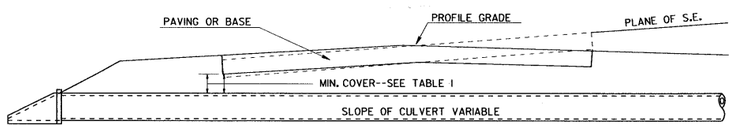

NOTE:

1. FOR FILL HEIGHT TABLES SEE SHEET 2 OF 3 AND SHEET 3 OF 3.
2. ONLY ONE CLASS OR THICKNESS OF PIPE WILL BE SPECIFIED FOR EACH INDIVIDUAL LOCATION. THE CLASS OR THICKNESS WILL BE DETERMINED BY THE MAXIMUM HEIGHT OF FILL.

DEPARTMENT OF TRANSPORTATION
STATE OF GEORGIA

STANDARD
CONCRETE & METAL PIPE CULVERTS
SHEET 1 OF 3
(TRENCH CONSTRUCTION, BEDDING, BACKFILLING)

NO SCALE — REV. & REDR.: SEPT., 2001

DES. ____ (SUBMITTED) James A. Bennett
DRW. ____ STATE ROAD & AIRPORT DESIGN ENGR.
TRA. ____ (APPROVED) [signature]
CHK. ____ CHIEF ENGINEER

DATE / REVISION / BY

NUMBER 1030D

TABLE NO. I ROUND PIPE - CONCRETE - CORRUGATED STEEL - CORRUGATED ALUMINUM

MINIMUM CLASS OF CONCRETE OR MINIMUM THICKNESS OF STEEL AND ALUMINUM

PIPE DIAMETER (INCHES)	TYPE	MINIMUM COVER (INCHES)	HEIGHT OF FILL IN FEET ABOVE TOP OF PIPE											PIPE DIAMETER (INCHES)
			1 - 10	10 - 15	15 - 20	20 - 25	25 - 30	30 - 35	35 - 40	40 - 50	50 - 60	60 - 70	70 - 80	80 - 90	
12	CONCRETE	12	III	III	IV	V	V	V	V	V	V	V	V		12
	STEEL 1	12	.064	.064	.064	.064	.064	.064	.064	.064	.064	.064	.064	.064	
	ALUM 1	12	.060	.060	.060	.060	.075	.075	.075	.075	.075	.075	.075	.075	
15	CONCRETE	12	III	III	IV	V	V	V	V	V	V	V	V		15
	STEEL 1	12	.064	.064	.064	.064	.064	.064	.064	.064	.064	.064	.064	.064	
	ALUM 1	12	.060	.060	.060	.060	.075	.075	.075	.075	.075	.075	.075	.105	
18	CONCRETE	12	III	III	IV	V	V	V	V	V	V	V	V		18
	STEEL 1	12	.064	.064	.064	.064	.064	.064	.064	.064	.064	.064	.064	.064	
	ALUM 1	12	.060	.060	.060	.060	.075	.075	.075	.075	.105	.105	.105	.105	
24	CONCRETE	12	III	III	IV	V	V	V	V	V	V	V	V		24
	STEEL 1	12	.064	.064	.064	.064	.064	.064	.064	.064	.064	.064	.079	.079	
	ALUM 1	12	.060	.060	.060	.075	.075	.075	.075	.105	.105	.105	.105		
30	CONCRETE	12	III	III	IV	V	V	V	V	V	V	V	V		30
	STEEL 1	12	.064	.064	.064	.064	.064	.064	.064	.064	.079	.079	.109	.109	
	ALUM 1	12	.075	.075	.075	.075	.075	.105	.105	.105	.135	.135			
36	CONCRETE	12	III	III	IV	V	V	V	V	V	V	V	V		36
	STEEL 1	12	.064	.064	.064	.064	.064	.064	.064	.079	.079	.109	.109	.138	
	STEEL 2	12	.064	.064	.064	.064	.064	.064	.064	.064	.079	.079	.109	.109	
	ALUM 1	12	.075	.105	.105	.105	.105	.105	.135	.135	.135	.135			
	ALUM 2	12	.060	.060	.060	.060	.075	.075	.105	.105	.105	.135			
42	CONCRETE	12	III	III	IV	V	V	V	V	V	V	V	V		42
	STEEL 1	12	.064	.064	.064	.064	.064	.064	.064	.079	.109	.109	.138	.138	
	STEEL 2	12	.064	.064	.064	.064	.064	.064	.064	.079	.109	.109	.109	.138	
	ALUM 1	12	.105	.105	.135	.135	.164	.164							
	ALUM 2	12	.060	.060	.060	.075	.075	.105	.105	.105	.135	.135			
48	CONCRETE	12	III	III	IV	V	V	V	V	V	V	V	V		48
	STEEL 1	12	.064	.064	.064	.064	.064	.064	.079	.109	.109	.138	.138	.168	
	STEEL 2	12	.064	.064	.064	.064	.064	.064	.064	.079	.109	.109	.138	.138	
	ALUM 1	12	.105	.105	.135	.164	.164	.164							
	ALUM 2	12	.060	.060	.060	.075	.075	.105	.105	.135	.135	.164	.164		
54	CONCRETE	12	III	III	IV	V	V	V	V	V	V	V	V		54
	STEEL 1	12	.079	.079	.079	.079	.079	.079	.079	.109	.138	.138	.168		
	STEEL 2	12	.064	.064	.064	.064	.064	.064	.079	.109	.109	.138	.138	.168	
	ALUM 1	15	.105	.105	.135	.164	.164	.164							
	ALUM 2	15	.060	.060	.060	.075	.075	.105	.135	.135	.164	.164			
60	CONCRETE	12	III	III	IV	V	V	V	V	V	V	V	V		60
	STEEL 1	12	.109	.109	.109	.109	.109	.109	.109	.109	.138	.168			
	STEEL 2	12	.064	.064	.064	.064	.064	.079	.079	.109	.138	.138	.168	.168	
	ALUM 1	15	.135	.135	.164	.164	.164	.164							
	ALUM 2	15	.060	.060	.075	.105	.105	.135	.135	.164	.164				
66	CONCRETE	12	III	III	IV	V	V	V	V	V	V	V			66
	STEEL 1	12	.138	.138	.138	.138	.138	.138	.138	.138	.168	.168			
	STEEL 2	12	.064	.064	.064	.064	.064	.079	.109	.109	.138	.168	.168		
	ALUM 1	18	.164	.164	.164	.164	.164								
	ALUM 2	18	.075	.075	.105	.105	.135	.135	.164	.164					
72	CONCRETE	12	III	III	IV	V	V	V	V	V	V	V			72
	STEEL 1	12	.138	.138	.138	.138	.138	.138	.138	.138	.168				
	STEEL 2	12	.064	.064	.064	.064	.079	.109	.109	.138	.138	.168			
	ALUM 1	18	.164	.164	.164	.164	.164								
	ALUM 2	18	.075	.075	.105	.105	.135	.164	.164	.164					
78	CONCRETE	12	III	III	IV	V	V	V	V	V	V				78
	STEEL 1	15	.168	.168	.168	.168	.168	.168	.168	.168					
	STEEL 2	15	.064	.064	.064	.064	.079	.109	.109	.138	.168	.168			
	ALUM 2	21	.075	.075	.105	.105	.135	.164	.164						
84	CONCRETE	12	III	III	IV	V	V	V	V	V	V				84
	STEEL 1	15	.168	.168	.168	.168	.168	.168	.168	.168					
	STEEL 2	15	.064	.064	.064	.079	.079	.109	.109	.138	.168				
	ALUM 2	21	.105	.105	.105	.135	.135	.164	.164						
90	CONCRETE	12	III	III											90
	STEEL 2	18	.064	.064	.064	.079	.109	.109	.138	.138	.168				
	ALUM 2	24	.105	.105	.135	.135	.164								
96	CONCRETE	12	III	III											96
	STEEL 2	18	.079	.079	.079	.079	.109	.109	.138	.168					
	ALUM 2	24	.105	.105	.135	.135	.164								
102	CONCRETE	12	III	III											102
	STEEL 2	24	.079	.079	.079	.109	.109	.138	.138	.168					
	ALUM 2	24	.135	.164	.164										
108	CONCRETE	12	III	III											108
	STEEL 2	24	.109	.109	.109	.109	.109	.138	.138	.168					
	ALUM 2	24	.135	.164											
114	CONCRETE														114
	STEEL 2	24	.109	.109	.109	.109	.109	.138	.168						
	ALUM 2	24	.164	.164											
120	CONCRETE														120
	STEEL 2	24	.109	.109	.109	.109	.138	.138	.168						
	ALUM 2	24	.164	.164											

IMPERFECT BACKFILL IS NOT REQUIRED FOR CONDTIONS SHOWN ON THE LEFT SIDE OF THE HEAVY LINE. USE NORMAL BACKFILL.

FOR CONDITIONS TO THE RIGHT OF THE HEAVY LINE, CLASS V CONCRETE PIPE REQUIRES IMPERFECT BACKFILL ACCORDING TO DETAIL "A" OR "B" ON SHEET 1 OF 3.

TABLE NO.3-(INFORMATION ONLY)		
	COR. METAL THICKNESS	EQUIVALENT GAGE
STEEL	.064	16
	0.079	14
	0.109	12
	0.138	10
	0.168	8
ALUMINUM	0.060	16
	0.075	14
	0.105	12
	0.135	10
	0.164	8

STEEL 1 OR ALUM 1 DENOTES CORRUGATION PROFILE 2 2/3" X 1/2"

STEEL 2 OR ALUM 2 DENOTES CORRUGATION PROFILE 3" X 1" (OR 5" X 1" FOR STEEL PIPE ONLY)

ALL STEEL AND ALUMINUM PIPE SHALL BE LOCK-SEAM OR WELDED-SEAM (HELICAL) CONSTRUCTION.

MINIMUM COVER VALUES APPLY TO HS-20 LIVE LOAD. MINIMUM COVER NEEDED FOR CONSTRUCTION VEHICLES MAY BE GREATER AND IS THE RESPONSIBILITY OF THE CONTRACTOR.

TRENCH CONSTRUCTION IS REQUIRED FOR CONDITIONS ON BOTH SIDES OF HEAVY LINE. SEE SHEET 1 OF 3.

FOR CONDITIONS TO RIGHT OF HEAVY LINE, CONCRETE PIPE REQUIRES IMPERFECT BACKFILL ACCORDING TO SPECIFICATIONS AND THIS STANDARD.

TABLE VALUES FOR ALUMINUM CORRUGATED PIPE (OR ALUMINUM SPIRAL RIB PIPE) ARE COMPUTED BASED UPON ALCLAD ALLOY 3004-H34 HAVING MINIMUM YIELD STRENGTH, fy=24,000 PSI. IF ALUMINUM PIPE IS OTHERWISE FURNISHED AS 3004-H32 (fy=20,000 PSI), THE TABLE NO. I ALLOWABLE FILL HEIGHTS SHALL BE ADJUSTED AS FOLLOWS:

A. ALL MINIMUM COVER VALUES SHALL BE INCREASED BY 15 PERCENT. (EXAMPLE: 12 INCHES BECOMES 13.8 INCHES)
B. ALL HEIGHT OF FILL VALUES SHALL BE DECREASED BY 15 PERCENT. (EXAMPLE: 35-40 FEET BECOMES 29.7-34.0 FEET)

BY	REVISION	DATE
	GEN. REV. NOTES	9-26-01
GJP	ADDED SEAM CONST. NOTE	3-9-99

DES. ___ DRW. ___ TRA. ___ CHK. ___

NO SCALE

(SUBMITTED) _____ STATE AIRPORTS ENGR.

(APPROVED) _____ CHIEF ENGINEER

OCTOBER 21, 1998

NUMBER 1030D

DEPARTMENT OF TRANSPORTATION
STATE OF GEORGIA

STANDARD
CONCRETE & METAL PIPE CULVERTS
SHEET 2 OF 3
(FILL HEIGHTS FOR CONCRETE & CORRUGATED METAL PIPE)

STATE GA.	PROJECT NUMBER
	SHEET NO.
	TOTAL SHEETS

TABLE NO. 1 R ROUND PIPE - SPIRAL RIB STEEL - SPIRAL RIB ALUMINUM
MINIMUM THICKNESS OF STEEL AND ALUMINUM

PIPE DIAMETER (INCHES)	TYPE	MINIMUM COVER (INCHES)	HEIGHT OF FILL (FEET) ABOVE TOP OF PIPE											PIPE DIAMETER (INCHES)
			1-10	10-15	15-20	20-25	25-30	30-35	35-40	40-50	50-60	60-70	70-80	80-90	
12															12
15															15
18	STEEL R	12	.064	.064	.064	.064	.064	.064	.064	.064	.064	.079	.079		18
	ALUM R	12	.060	.060	.060	.060	.060	.060	.075	.075					
24	STEEL R	12	.064	.064	.064	.064	.064	.064	.064	.079	.079	.109	.109		24
	ALUM R	12	.060	.060	.060	.060	.075	.075	.105	.105	.105				
30	STEEL R	12	.064	.064	.064	.064	.064	.064	.079	.079	.109	.109	.109		30
	ALUM R	15	.060	.060	.060	.075	.075	.105	.105	.105					
36	STEEL R	12	.064	.064	.064	.064	.064	.079	.079	.109	.109	.109			36
	ALUM R	18	.060	.060	.075	.075	.105	.105	.105	.135	.135				
42	STEEL R	12	.064	.064	.064	.064	.079	.079	.109	.109	.109				42
	ALUM R	21	.075	.075	.075	.105	.105	.105	.135	.135					
48	STEEL R	12	.064	.064	.064	.079	.079	.109	.109	.109					48
	ALUM R	24	.105	.105	.105	.105	.105	.135	.135						
54	STEEL R	15	.064	.064	.064	.079	.079	.109	.109						54
	ALUM R	24	.105	.105	.105	.105	.135	.135	.135						
60	STEEL R	15	.079	.079	.079	.079	.109	.109	.109						60
	ALUM R	24	.105	.105	.105	.105	.135	.135							
66	STEEL R	18	.079	.079	.079	.109	.109	.109	.109						66
	ALUM R	24	.135	.135	.135	.135	.135								
72	STEEL R	18	.109	.109	.109	.109	.109	.109							72
	ALUM R	27	.135	.135	.135	.135	.135								
78	STEEL R	21	.109	.109	.109	.109	.109								78
84	STEEL R	21	.109	.109	.109	.109	.109								84
90															90
96															96
102															102
108															108
114															114
120															120

R DENOTES SPIRAL RIB PROFILE 3/4" X 3/4" X 7-1/2"

TABLE VALUES FOR ALUMINUM SPIRAL RIB PIPE ARE COMPUTED BASED UPON ALCLAD ALLOY 3004-H34 HAVING MINIMUM YIELD STRENGTH, f_y=24,000 PSI. IF ALUMINUM PIPE IS OTHERWISE FURNISHED AS 3004-H32 (f_y=20,000 PSI), ALLOWABLE FILL HEIGHTS SHALL BE ADJUSTED AS FOLLOWS:

A. ALL MINIMUM COVER VALUES SHALL BE INCREASED BY 15 PERCENT. (EXAMPLE: 12 IN. BECOMES 13.8 IN.)

B. ALL HEIGHT OF FILL VALUES SHALL BE DECREASED BY 15 PERCENT. (EXAMPLE: 35-40 FT. BECOMES 29.7-34.0 FT.)

MINIMUM COVER VALUES APPLY TO HS-20 LIVE LOAD. MINIMUM COVER NEEDED FOR CONSTRUCTION VEHICLES MAY BE GREATER AND IS THE RESPONSIBILITY OF THE CONTRACTOR.

TRENCH CONSTRUCTION IS REQUIRED FOR ALL INSTALLATIONS.

TABLE NO. 2 (PIPE-ARCH)

TABLE SHOWING MINIMUM THICKNESS IN INCHES OF CORRUGATED STEEL AND CORRUGATED ALUMINUM PIPE-ARCH AND MAXIMUM HEIGHTS OF FILL IN FEET ABOVE THE TOP OF THE PIPE-ARCH.

DIAMETER OF PIPE OF EQUAL PERIPHERY INCH	NOM.-MIN. SPAN INCH	NOM.-MIN. RISE INCH	MIN. THICKNESS (INCHES)			MIN. COVER (INCHES)	MAX. HT. FILL (FEET)
			COR. STEEL		COR. ALUMINUM		
			①	②			
15	17	13	.064			18	13
					.060	18	15
18	21	15	.064			18	12
					.060	18	14
21	24	18	.064			18	10
					.060	18	13
24	28	20	.064			18	9
					.075	18	11
30	35	24	.064			18	9
					.075	18	9
36	42	29	.064			18	7
					.105	18	7
	40	31		.079		18	12
42	49	33	.079			18	7
					.105	18	7
	46	36	.079	.079		18	12
48	57	38	.109			18	7
					.135	18	7
	53	41		.079		18	12
54	64	43	.109			18	7
					.135	18	7
	60	46		.079		18	12
60	71	47	.138			18	7
					.164	18	7
	66	51		.079		18	12
66	77	52	.168			18	7
	73	55		.079		18	15
77	83	57	.168			18	8
	81	59		.079		18	15
78	87	63		.079		18	14
84	95	67		.109		18	12
90	103	71		.109		24	11

NOTE FOR TABLE NO. 2.
ALTERNATE SPAN-RISE COMBINATIONS FOR PIPE-ARCHES, HAVING EQUAL PERIPHERY TO THAT SHOWN, MAY BE SUBSTITUED IF LISTED IN AASHTO SPECIFICATION.

BY	REVISION	DATE

DEPARTMENT OF TRANSPORTATION
STATE OF GEORGIA

STANDARD
CONCRETE & METAL PIPE CULVERTS
SHEET 3 OF 3
(FILL HEIGHTS FOR SPIRAL RIB METAL PIPE & FOR PIPE ARCH)

NO SCALE

DESIGNED
TRACED
CHECKED
REVISED

(SUBMITTED) STATE ROAD & TOLLWAY AUTHORITY DESIGN ENGINEER
(APPROVED) CHIEF ENGINEER

SEPT., 2001

NUMBER 1030D

GA. | STATE | PROJECT NUMBER | SHEET NO. | TOTAL SHEETS

STATE	PROJECT NUMBER	SHEET NO.	TOTAL SHEETS
GA.			

CONCRETE TO THERMOPLASTIC SIDE DRAIN OR CROSS DRAIN CONNECTION ALTERNATES

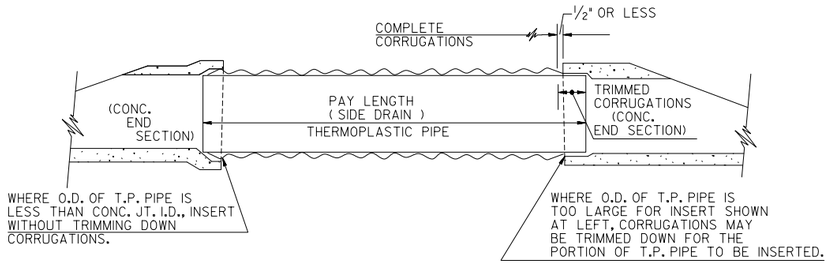

METAL TO THERMOPLASTIC SIDE DRAIN CONNECTION ALTERNATES (SEE GENERAL NOTE NO. 5)

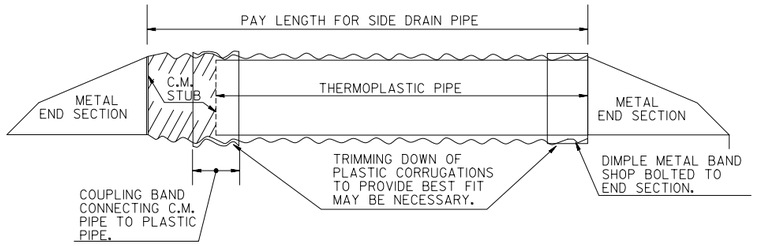

NOTE:
FOR PLASTIC SIDE DRAIN CONNECTIONS TO SAFETY END SECTIONS, SEE THE SMOOTH TAPERED SLEEVE CONNECTOR DETAILS (SEE GA STANDARD 1122 FOR SAFETY SLOPE END SECTIONS FOR SIDE DRAIN PIPES).

ALL CROSS DRAIN TYPES TO THERMOPLASTIC SLOPE DRAIN CONNECTION

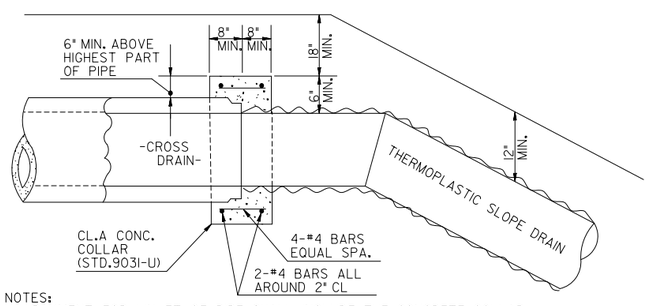

NOTES:
PAYMENT FOR LIN. FT. OF PIPE SHALL INCLUDE THE CONCRETE COLLAR. CONCRETE COLLARS ARE ALSO PERMITTED FOR SIDE DRAIN CONNECTIONS. CONNECTIONS SHOWN ABOVE FOR SIDE DRAIN ARE NOT PERMITTED FOR SLOPE DRAIN CONNECTIONS.

THERMOPLASTIC PIPE TRENCH INSTALLATIONS

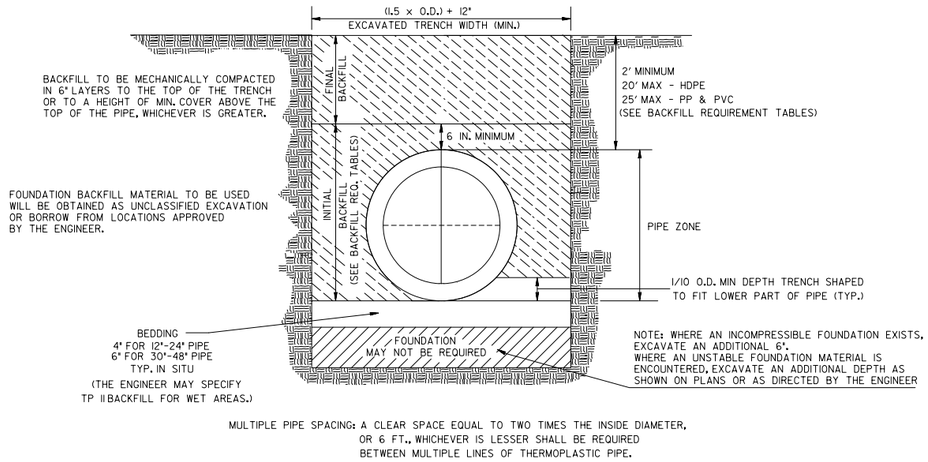

MULTIPLE PIPE SPACING: A CLEAR SPACE EQUAL TO TWO TIMES THE INSIDE DIAMETER, OR 6 FT., WHICHEVER IS LESSER SHALL BE REQUIRED BETWEEN MULTIPLE LINES OF THERMOPLASTIC PIPE.

BACKFILL REQUIREMENT TABLES

STORM DRAIN INSTALLATIONS			
PIPE TYPE	MAX. FILL HEIGHT (FT)	INITIAL BACKFILL TYPE	FOUNDATION BACKFILL TYPE
HDPE	20	STRUCTURAL	CLASS IIB2 OR BETTER
PVC	25	STRUCTURAL	CLASS IIB3 OR BETTER
PP	25	STRUCTURAL	CLASS IIB3 OR BETTER

SIDE DRAIN (DRIVEWAY) INSTALLATIONS (FILL HEIGHTS UP TO 10-FT)			
PIPE TYPE	MAX. FILL HEIGHT (FT)	INITIAL BACKFILL TYPE	FOUNDATION BACKFILL TYPE
HDPE	10	CLASS IIB2 OR BETTER	CLASS IIB2 OR BETTER
PVC	10	CLASS IIB3 OR BETTER	CLASS IIB3 OR BETTER
PP	10	CLASS IIB3 OR BETTER	CLASS IIB3 OR BETTER

SIDE DRAIN (DRIVEWAY) INSTALLATIONS (FILL HEIGHTS ABOVE 10-FT)			
PIPE TYPE	MAX. FILL HEIGHT (FT)	INITIAL BACKFILL TYPE	FOUNDATION BACKFILL TYPE
HDPE	20	STRUCTURAL	CLASS IIB2 OR BETTER
PVC	25	STRUCTURAL	CLASS IIB3 OR BETTER
PP	25	STRUCTURAL	CLASS IIB3 OR BETTER

INITIAL BACKFILL & BEDDING QUANTITIES		
NOMINAL SIZE (IN.)	INITIAL BACKFILL (FT^3/LF)	BEDDING (FT^3/LF)
12	2.97	0.83
15	3.80	0.96
18	4.73	1.08
24	6.86	1.33
30	9.34	2.38
36	12.18	2.75
42	15.38	3.13
48	18.93	3.50

NOTE: BACKFILL AND BEDDING QUANTITIES IN THE ABOVE TABLE ARE BASED ON THE TYPICAL INSIDE DIAMETER OF PIPE - NOT THE OUTSIDE DIAMETER OF PIPE.

ALLOWABLE PIPE SIZES

HIGH DENSITY POLYETHYLENE (HDPE) AASHTO M 294	POLYPROPYLENE (PP) AASHTO M 330	PROFILE WALL POLYVINYL CHLORIDE (PVC) AASHTO M 304	CORRUGATED SMOOTH INTERIOR POLYVINYL CHLORIDE (PVC) ASTM F 949
NOMINAL SIZE (IN.)	NOMINAL SIZE (IN.)	NOMINAL SIZE (IN.)	NOMINAL SIZE (IN.)
12	12	12	12
15	15	15	15
18	18	18	18
24	24	21	21
30	30	24	24
36	36	30	30
42	42	36	36
48	48	42	
		48	

GENERAL NOTES:

1. SPECIFICATIONS: GEORGIA STANDARD, CURRENT EDITION & SUPPLEMENTS THERETO.
2. THE MINIMUM COVER SHALL BE 24" FOR STORM AND SIDE DRAINS AND 12" FOR SLOPE DRAIN PIPE.
3. THE MAXIMUM HEIGHT OF FILL SHALL BE:
   - 20' FOR HIGH DENSITY POLYETHYLENE (HDPE)
   - 25' FOR POLYVINYL CHLORIDE (PVC)
   - 25' FOR POLYPROPYLENE (PP)
4. MINIMUM PIPE STIFFNESS SHALL BE IN ACCORDANCE WITH AASHTO M 294, TYPE "S" FOR HDPE PIPE, AASHTO M 304 FOR PROFILE WALL PVC PIPE, AASHTO M 330 FOR PP PIPE, AND ASTM F 949 FOR CORRUGATED SMOOTH INTERIOR PVC PIPE.
5. METAL FLARED END SECTIONS PER STD. 1120 ARE PERMITTED ONLY WHERE THE PLANS LIST PLAIN CORRUGATED STEEL PIPE AS AN ALLOWABLE ALTERNATE FOR THE CULVERT.
6. GRADED AGGREGATE MEETING SECTION 815 SHALL BE USED FOR STRUCTURAL BACKFILL IN ACCORDANCE WITH BACKFILL REQUIREMENT TABLES AND WILL NOT BE PAID FOR SEPARATELY. PAYMENT WILL BE INCLUDED IN THE OVERALL PRICE BID FOR PIPE.
7. NORMAL BACKFILL MATERIAL MEETING SUBSECTION 810.2.01 MAY BE USED FOR SIDE DRAIN APPLICATIONS FOR FILL HEIGHTS UP TO 10 FT IN ACCORDANCE WITH TYPE AND CLASS LISTED IN THE BACKFILL REQUIREMENT TABLES. IF THE REQUIRED SOIL CLASS IS NOT AVAILABLE USE GRADED AGGREGATE MATERIAL MEETING SECTION 815.

BY	REVISION	DATE
HAC	REV INITL BKFILL TO 6" MIN	11-4-19
	REV INITL BKFILL QUANTITIES	
	REV GRAD. AGG. MTL. TO REF	
	SEC 815 IN GEN NOTES 6&7	

DEPARTMENT OF TRANSPORTATION
STATE OF GEORGIA

STANDARD

THERMOPLASTIC PIPE

NO SCALE — SEPTEMBER 2016

DESIGNED ____ (SUBMITTED) _____ STATE DESIGN POLICY ENGINEER
TRACED ____
DRAWN B.J.O.
CHECKED W.D.I. (APPROVED) Margaret B Pirkle CHIEF ENGINEER

NUMBER 1030P

STATE	PROJECT NUMBER	SHEET NO.	TOTAL SHEETS
GA.			

CATCH BASIN TYPE 1.

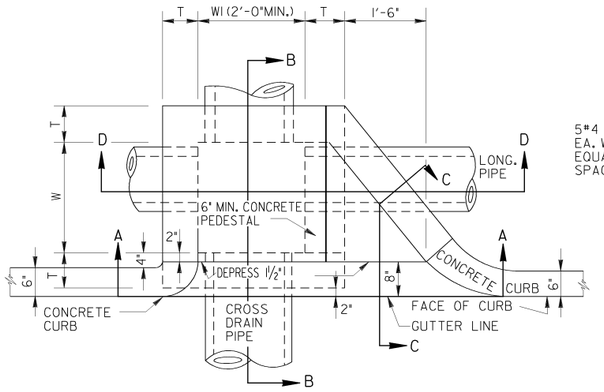

PLAN

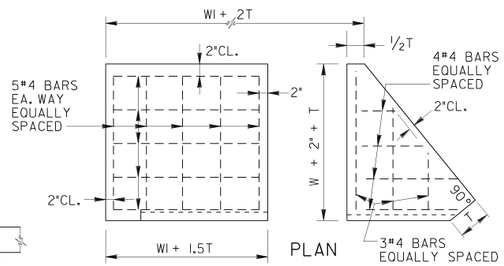

NOTE:
TOP SLAB TO BE CONSTRUCTED IN TWO SECTIONS AS SHOWN.

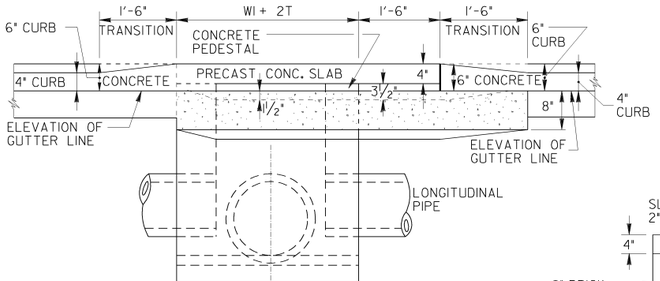

SECTION A-A

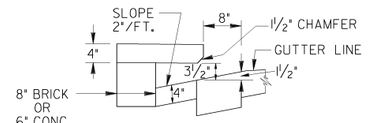

SECTION C-C

MIN. DIMENSIONS-TP. 1 OR 2		
PIPE SIZE	W ORWI	MIN. H
10"	2'-0"	3'-0"
15"	2'-0"	3'-3"
18"	2'-3"	3'-9"

NOTE:
IF CATCH BASIN IS USED IN 4' MEDIAN WITH 4" CURB HEIGHT, SLOPE TOP SLAB 2" BACK. BACK TOP OF SLAB TO HAVE SAME ELEVATION AS TOP OF CURB.

T= 8" FOR BRICK MASONRY WALLS OR BOTTOM
T= 6" CONCRETE WALLS OR BOTTOM

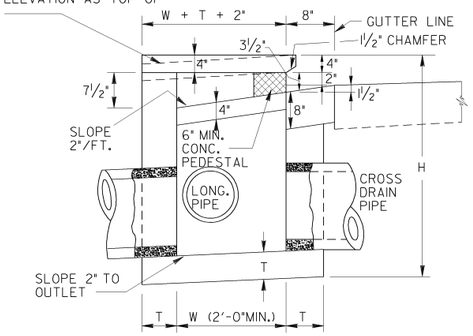

SECTION B-B (BUILT IN PLACE)
SAME FOR TYPE 2

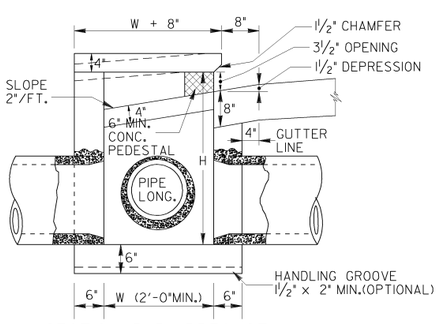

SECTION B-B (PRECAST)
SAME FOR TYPE 2

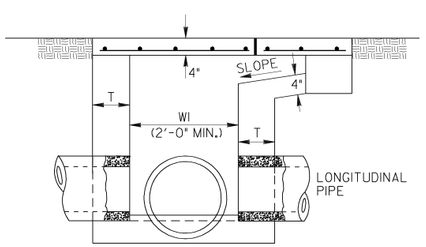

SECTION D-D

CATCH BASIN TYPE 2

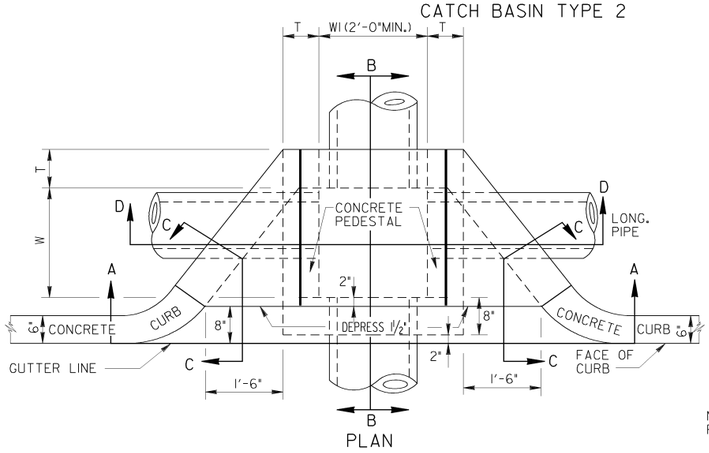

PLAN

T= 8" FOR BRICK MASONRY WALLS OR BOTTOM
T= 6" CONCRETE WALLS OR BOTTOM

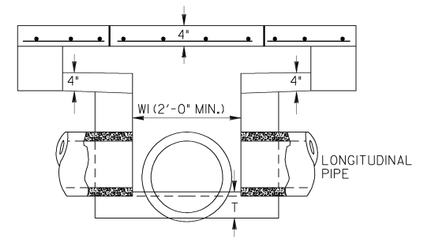

SECTION D-D

NOTE:
FOR SECTION B-B AND SECTION C-C SEE CATCH BASIN TYPE 1.

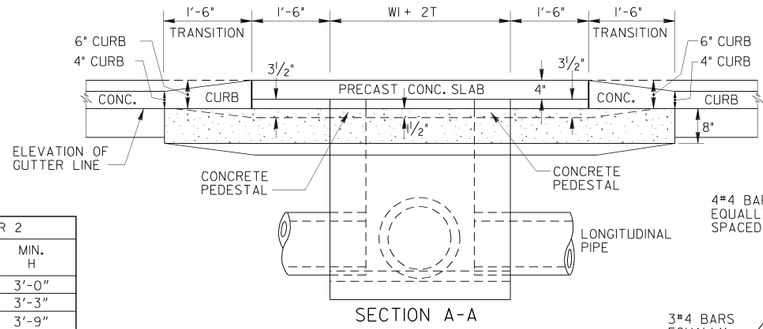

SECTION A-A

PRECAST CONCRETE SLAB

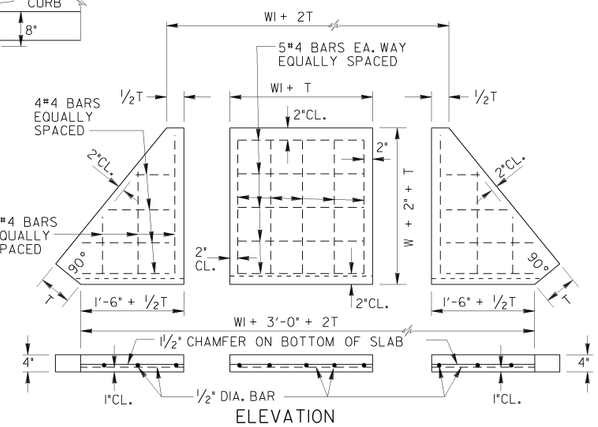

NOTE: TOP SLAB TO BE CONSTRUCTED IN THREE SECTIONS AS SHOWN.

SPECIAL NOTE:
THIS STANDARD IS FOR USE ONLY WHERE IT IS NOT FEASIBLE TO USE OTHER CATCH BASIN OR DROP INLET DESIGNS.

GENERAL NOTES:

1. SPECIFICATIONS: GEORGIA STANDARD, CURRENT EDITION & SUPPLEMENTS THERETO.

2. CATCH BASIN WALLS AND BOTTOM SHALL BE EITHER 8" BRICK MASONRY OR 6" CLASS A CONCRETE OR A COMBINATION OF BOTH. IF BOX PORTION OF CATCH BASIN IS PRECAST, ALL WALLS AND BOTTOM SHALL BE REINFORCED WITH EITHER #4 BARS AT 12"O.C. BOTH WAYS OR WITH 2/2, 6x6 WELDED WIRE FABRIC OR EQUAL, WITH 2" MIN. COVER OVER ALL STEEL. CAST-IN-PLACE CONCRETE WALLS AND BOTTOMS DO NOT REQUIRE REINFORCEMENT. ALTERNATE: BOTTOM PORTION OF STRUCTURE MAY BE CIRCULAR WITH ADAPTER TYPE 3 BETWEEN CIRCULAR AND SQUARE SECTIONS. (SEE STANDARD 1040.)

DEPARTMENT OF TRANSPORTATION
STATE OF GEORGIA

DATE
REVISION

STANDARD

PRECAST OR BUILT IN PLACE
CATCH BASINS
MAXIMUM PIPE CONNECTION-18"
MAY BE USED IN 4 FT. MEDIAN

NO SCALE
REDR. FEB. 98

BY
REV. & REDR. R.M.U.
TRA. G.M.E.
CHK. R.K.C.

(SUBMITTED)
STATE ROAD & AIRPORT DESIGN ENGR.
(APPROVED)
STATE HIGHWAY ENGINEER

NUMBER
1033B

CATCH BASIN

(IF CATCH BASIN HAS LONGITUDINAL PIPE OVER 24", SEE DETAILS AT RIGHT)

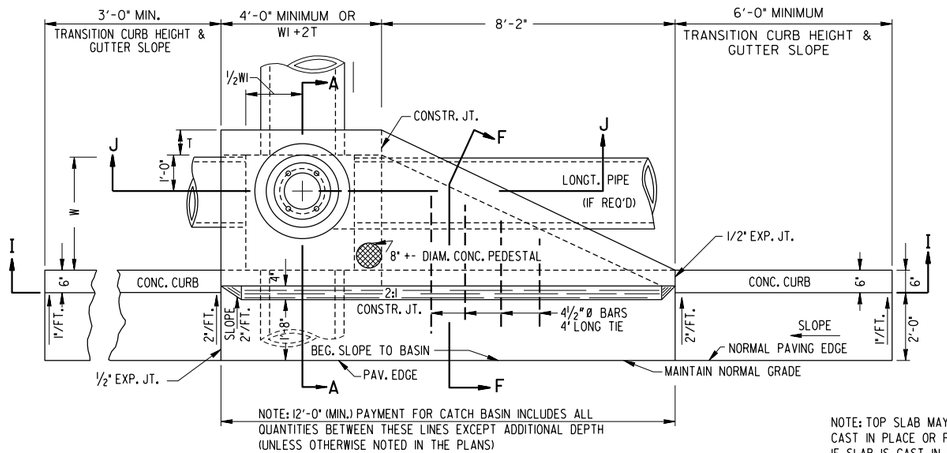

NOTE: 12'-0" (MIN.) PAYMENT FOR CATCH BASIN INCLUDES ALL QUANTITIES BETWEEN THESE LINES EXCEPT ADDITIONAL DEPTH (UNLESS OTHERWISE NOTED IN THE PLANS)

PLAN

NOTE: TOP SLAB MAY BE CAST IN PLACE OR PRECAST. IF SLAB IS CAST IN PLACE, BUILDERS PAPER IS TO BE PLACED BETWEEN THE CATCH BASIN AND TOP SLAB.

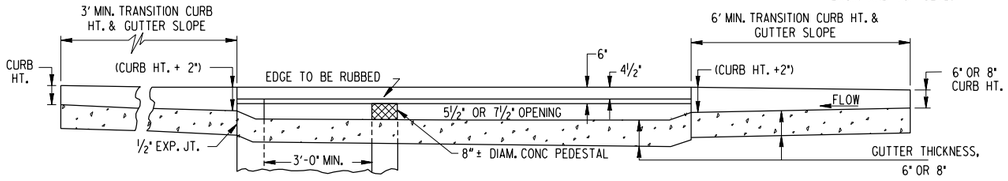

SECTION I-I

NOTE: NORMAL SLOPE OF CONCRETE APRON TO BE INCREASED BY 4" TO 8" WHERE "H" PERMITS AND LONGITUDINAL PIPE IS LOWERED FOR OTHER REASONS.

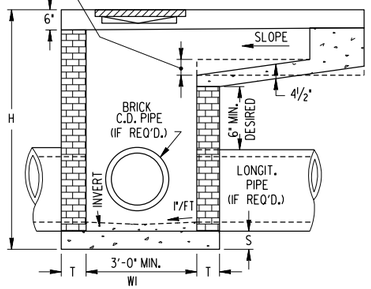

SECTION J-J

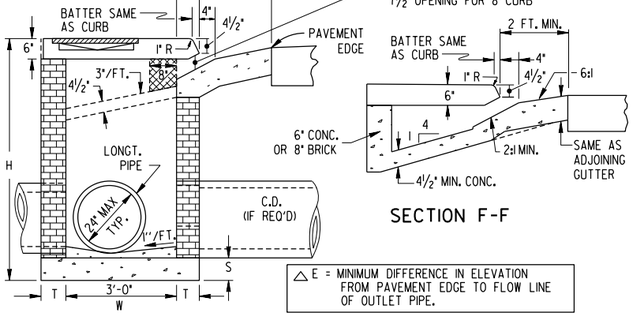

SECTION A-A

SECTION F-F

△E = MINIMUM DIFFERENCE IN ELEVATION FROM PAVEMENT EDGE TO FLOW LINE OF OUTLET PIPE.

DETAIL OF TOP SLAB, REINF. STEEL & CLEARANCES REQ'D.

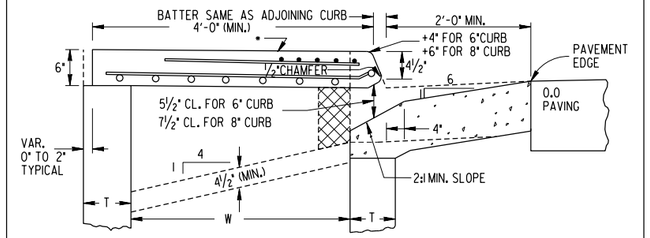

NOT TO SCALE

* SLOPE TOP TO MATCH ADJACENT SURFACES

CASTING DETAILS

3° TO 7° DRAFTS TYPICAL

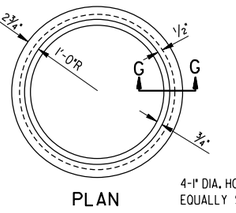

C.I. RING
APPROX. WT. =78 LBS.

ELEVATION

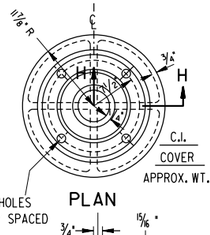

APPROX. WT. = 63 LBS.

ELEVATION

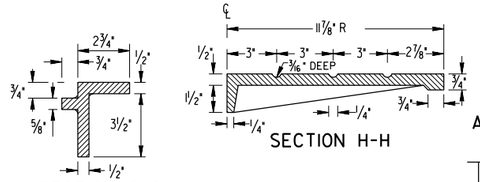

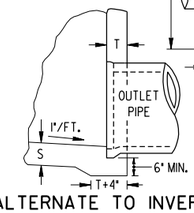

ALTERNATE TO INVERT

(TYPICAL FOR CATCH BASIN WITH LARGE LONGITUDINAL PIPE OR RECESSED BOX)

CATCH BASIN - (WITH PROTRUDED BACK)

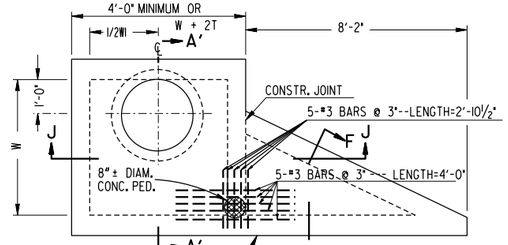

PART PLAN

NOTE: CATCH BASIN DETAILS NOT SHOWN HERE WILL BE SIMILAR TO THOSE AT LEFT FOR NORMAL CATCH BASIN.

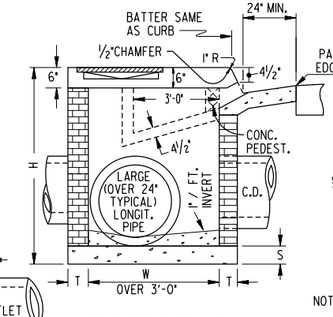

SECTION A'-A'
(WITH LARGE LONGITUDINAL PIPE)

NOTE: RECESSED BOX TO BE USED ONLY WHERE SPECIFIED. SHALLOW LONG. PIPE OR UNDERGROUND OBSTRUCTION TYPICAL.

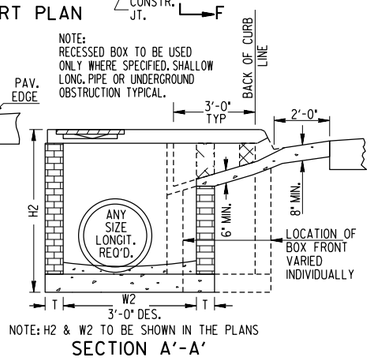

NOTE: H2 & W2 TO BE SHOWN IN THE PLANS

SECTION A'-A'
(WITH RECESSED BOX)

DETAIL OF TOP REINFORCED CONCRETE SLAB

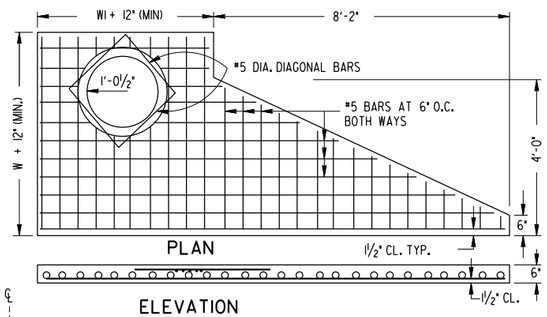

NOTE: PIPE SIZES, NUMBER, ALIGNMENT, AND INVERT SHOWN ARE ILLUSTRATIVE. SEE PLANS FOR SPECIFICS. INVERTS TO BE FORMED WITH GROUT OR CONCRETE AS DIRECTED BY THE ENGINEER OR AS SHOWN IN THE PLANS.

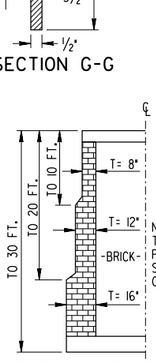

DEPTH LIMITS FOR INCREASING "T"

NOTE: SEE SEPARATE STDS. FOR PRECAST ALTERNATES ADAPTERS (STD. 1040) WILL BE REQUIRED WITH CIRCULAR PRE-CAST UNITS. PRECAST BOX, CIRCULAR AND/OR BUILT-IN-PLACE CONSTR. MAY BE USED IN COMBINATIONS.

NOTE: TYPICAL TREATMENT FOR SKEWED PIPE ARE; CIRCULAR PRECAST SWIVEL SECTIONS; PIPE ELBOWS OR INCREASED BOX SIZE.

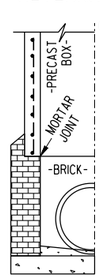

PRECAST BOX ON BRICK (HALF-SECTION)

TYPICAL MIN. DIMENSIONS			
PIPE DIA.	H (MIN.)	W or WI	△E (MIN)
12	4'-4"	3'-0"	3'-3"
15	4'-7"	3'-0"	3'-6"
18	4'-10"	3'-0"	3'-9"
24	5'-6"	3'-0"	4'-4"
30	6'-2"	3'-7"	5'-0"
36	6'-10"	4'-6"	5'-7"
42	7'-4"	5'-3"	5'-11"
48	8'-0"	6'-0"	6'-6"
54	8'-6"	6'-8"	7'-0"
60	9'-2"	7'-4"	7'-7"

NOTE: THE MIN. H & MIN. △E GIVEN IN ABOVE TABLE ARE BASED UPON TYPICAL OUTSIDE DIAMETERS OF CONC. PIPE AND MAY BE VARIED IF CONDITIONS PERMIT WITH VARIED DIMENSIONS SPECIFIED IN THE PLANS OR DIRECTED BY THE ENGINEER. W. & W. DIMENSIONS DO NOT HAVE TO BE EQUAL.

DETAIL OF TOP REINFORCED CONCRETE SLAB

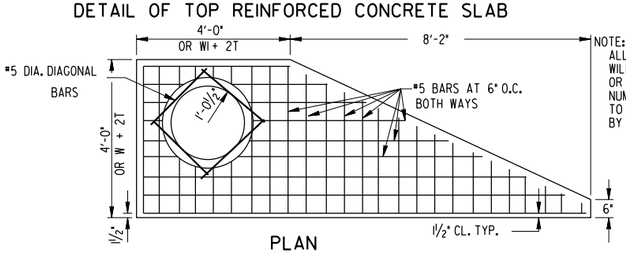

NOTE: ALL CATCH BASINS WILL HAVE STEPS OR LADDER BARS, NUMBER & LOCATION TO BE AS DIRECTED BY THE ENGINEER.

PLAN

NOTE: FOR PLAN DETAIL OF REINFORCING STEEL IN TOP PORTION OF SLAB, SEE PART PLAN AT TOP RIGHT.

NOTE: ALL BARS IN PLAN VIEW ARE SPACED AT 6" O.C.

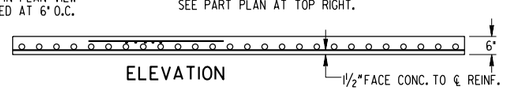

ELEVATION

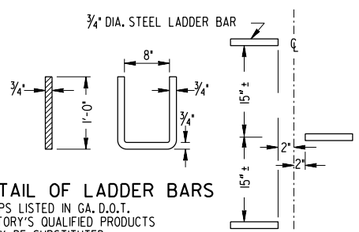

DETAIL OF LADDER BARS

NOTE: M.H. STEPS LISTED IN GA. D.O.T. LABORATORY'S QUALIFIED PRODUCTS LIST MAY BE SUBSTITUTED.

ARRANGEMENT OF LADDER BARS

W OR WI (MAX.)	BOTTOM SLAB MATERIALS	BOTTOM SLAB S
TO 4'-6"	NON-REINF. CONCRETE	6"
	OR BRICK	8"
OVER 4'-6"	CONC. REINF. WI #4 BARS 12" O.C. BOTH WAYS 2" CL FROM SLAB TOP	8"

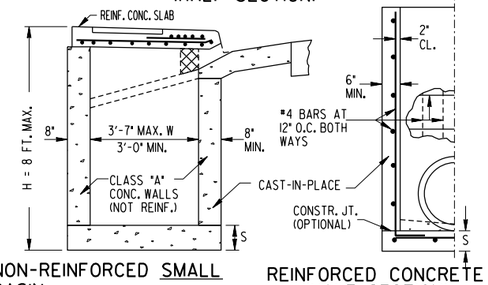

NON-REINFORCED SMALL BASIN (WI NOT OVER 3'-7")

REINFORCED CONCRETE (HALF-SECTION)

CONSTRUCTION ALTERNATES

NOTE: DETAILS NOT SHOWN ABOVE FOR CONSTRUCTION ALTERNATES WILL BE SIMILAR TO BRICK CATCH BASIN DETAILS. SEE SEPARATE STANDARDS FOR PRECAST ALTERNATES.

GDOT Georgia Department of Transportation

P. I. No. XXXXXXX

DEPARTMENT OF TRANSPORTATION
STATE OF GEORGIA

STANDARD CATCH BASINS

FOR USE WITH CURB (6"HT. OR 8" HT.) & GUTTER

NOT TO SCALE — REDRAWN JULY 2024 — AUG. 1982

DATE	REVISION	BY

REV. & REDR. R.M.U.
TRA. G.M.E.
CHK. R.K.C.

(SUBMITTED) Floyd E. Hardy — STATE ROAD & AIRPORT DESIGN ENGR.
(APPROVED) Thomas D. Wunderlich — STATE HIGHWAY ENGINEER

NUMBER 1033D

GDOT Georgia Department of Transportation | P. I. No. XXXXXXX

NOTE: OPENING FOR PIPE SHALL BE THE OUTSIDE DIAMETER OF THE REQUIRED PIPE PLUS 1" MIN OPENING SHALL HAVE CORRUGATIONS.

CATCH BASIN

(IF CATCH BASIN HAS LONGITUDINAL PIPE OVER 24", SEE DETAILS AT RIGHT.)

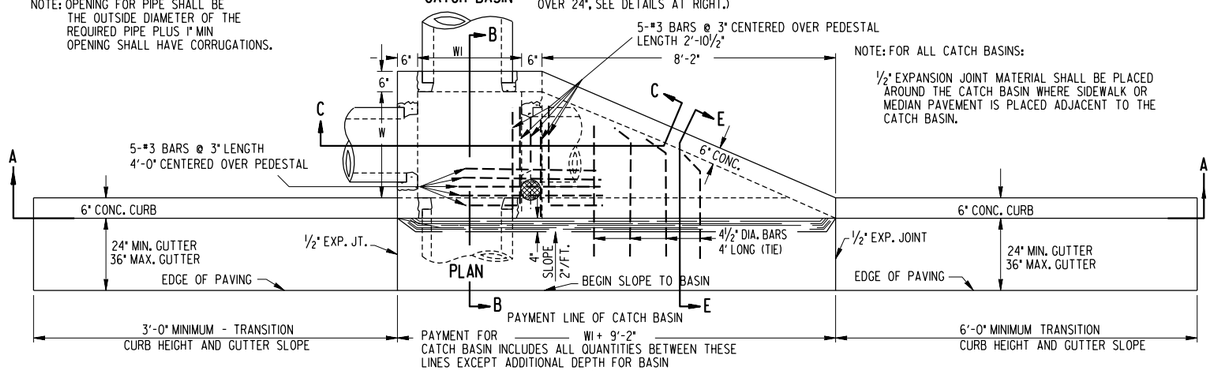

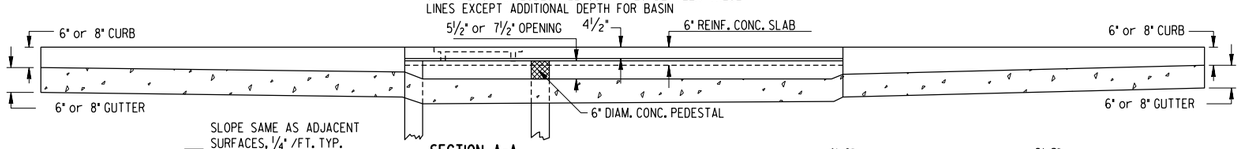

SECTION A-A

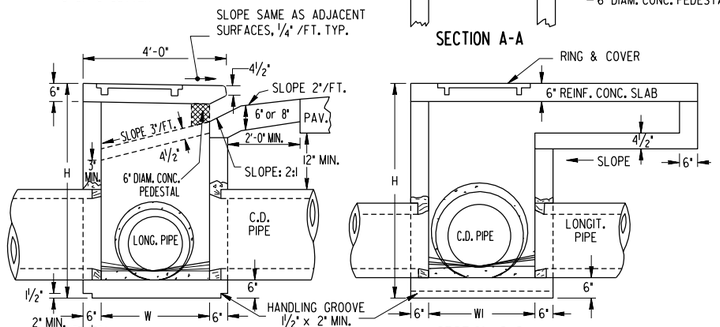

SECTION B-B FOR MIN. HEIGHT

SECTION C-C FOR MIN. HEIGHT

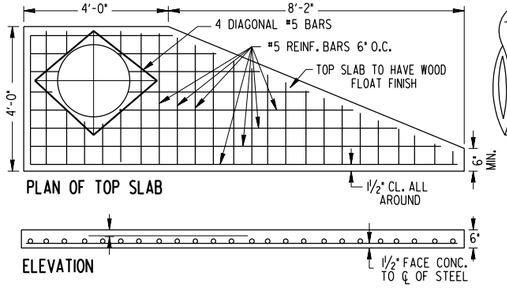

PLAN OF TOP SLAB

ELEVATION

SLOPE SAME AS ADJACENT SURFACES, ¼" /FT. TYP.

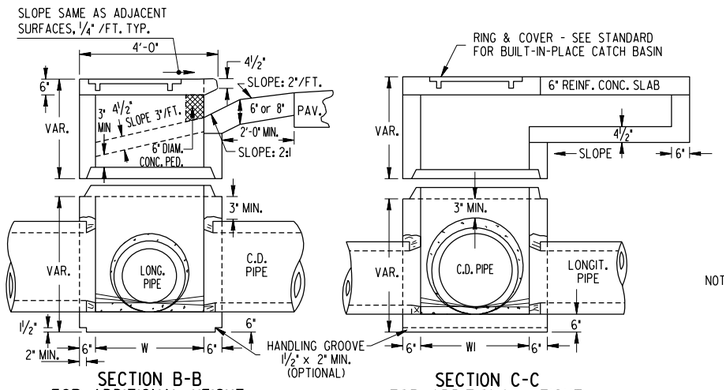

SECTION B-B FOR ADDITIONAL HEIGHT

SECTION C-C FOR ADDITIONAL HEIGHT

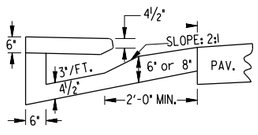

SECTION E-E

DETAIL OF TOP SLAB; REINF. STEEL & CLEARANCES REQUIRED

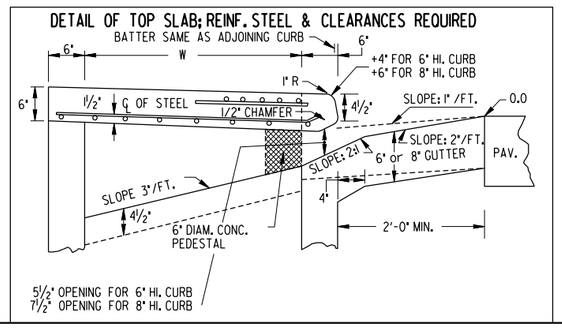

DETAIL AND ARRANGEMENT OF LADDER BARS

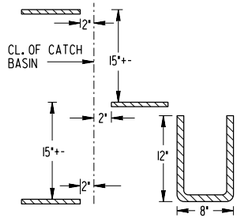

NOTE:
NUMBER AND LOCATION OF LADDER BARS IN CATCH BASIN TO BE AS DIRECTED BY THE ENGINEER

M.H. STEPS LISTED IN GA. D.O.T. LABORATORY'S QUALIFIED PRODUCTS LIST MAY BE SUBSTITUTED.

METHOD OF CONNECTING PIPE

(WHERE CONCRETE PIPE HAS TO BE CUT)

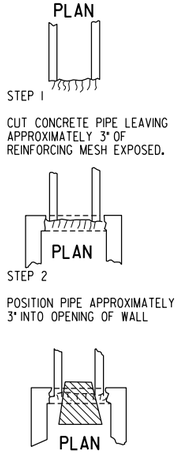

CATCH BASIN

(TYPICAL FOR CATCH BASIN WITH LONGITUDINAL PIPE OVER 24".)

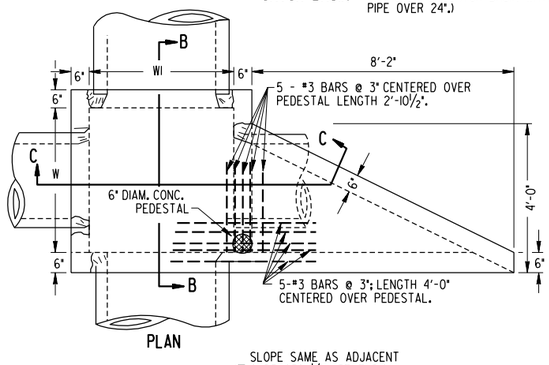

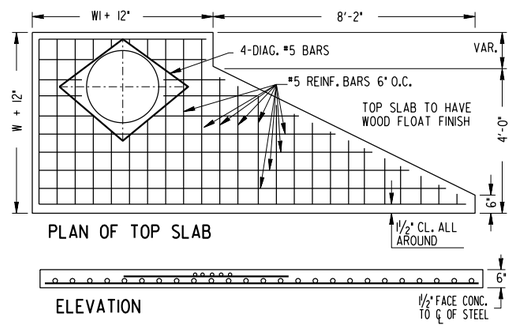

PLAN OF TOP SLAB

ELEVATION

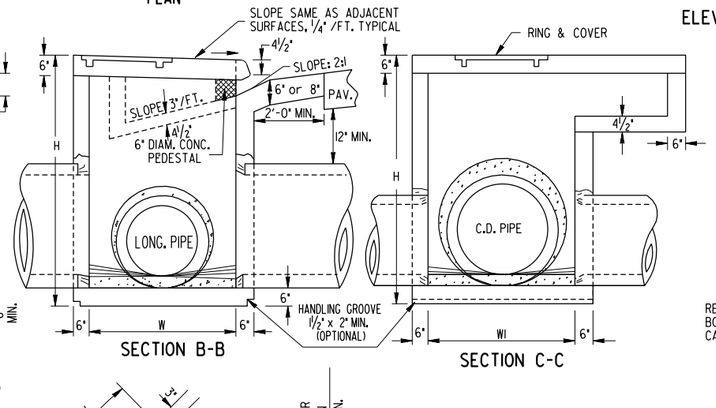

SECTION B-B

SECTION C-C

REINFORCING - ISOMETRIC VIEW

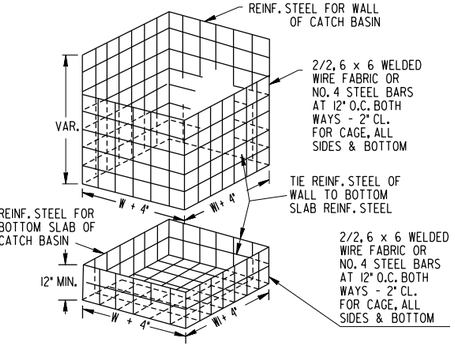

NOTE:
REINFORCING SHOWN ABOVE IS REQUIRED FOR BOX SHAPED BASIN. REINFORCING FOR CIRCULAR PRECAST ALTERNATE SHALL BE ACCORDING TO STD. 1040.

ALL JOINTS BETWEEN PRECAST RISERS OR BETWEEN PRECAST BASE AND RISER WILL BE KEYED. KEYED JOINTS SHOWN ARE TYPICAL AND MAY BE VARIED.

DIMENSIONS FOR CATCH BASINS		
PIPE SIZE	NORMAL W OR W1	MIN H
12"	3'-0"	4'-4"
15"	3'-0"	4'-7"
18"	3'-0"	4'-10"
24"	3'-0"	5'-6"
30"	3'-6"	6'-2"
36"	4'-0"	6'-10"
42"	5'-0"	7'-4"
48"	5'-0"	8'-0"
54"	6'-0"	8'-6"
60"	6'-0"	9'-2"

NOTE:
DIMENSIONS FOR CATCH BASINS ARE BASED UPON TYPICAL OUTSIDE DIAMETERS OF CONCRETE PIPES AND MAY BE VARIED IF CONDITIONS PERMIT AND THE ENGINEER APPROVES. W & W1 DIMENSIONS DO NOT HAVE TO BE EQUAL.

ALTERNATE:
BUILT-IN-PLACE, PRECAST BOX, AND/OR PRECAST CIRCULAR UNITS WITH THE REQUIRED ADAPTERS, REDUCERS, FITTINGS, CONNECTORS, ETC. MAY BE USED IN COMBINATIONS.

NOTE:
FOR RING & COVER DETAILS AND OTHER DETAILS NOT SHOWN, SEE STANDARD 1033D FOR BUILT-IN-PLACE CATCH BASIN.

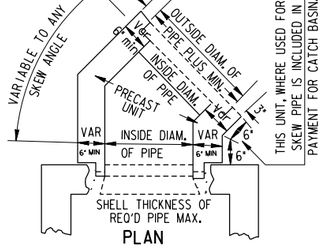

A METHOD OF CONNECTING SKEWED PIPE

IF THIS SWIVEL SECTION SLAB IS USED TO REDUCE THE W AND W1 DIMENSIONS, INCREASE THE MIN. THICKNESS TO 9" AND USE REINF. STEEL. SEE DETAIL BELOW.

DETAIL FOR REINFORCED STEEL

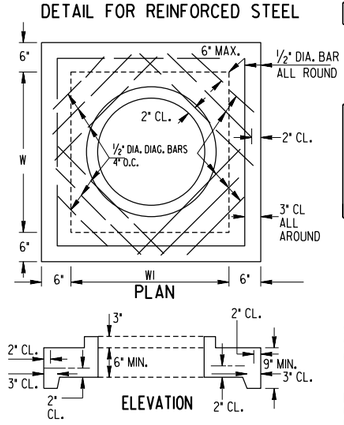

TYPICAL ISOMETRIC VIEW

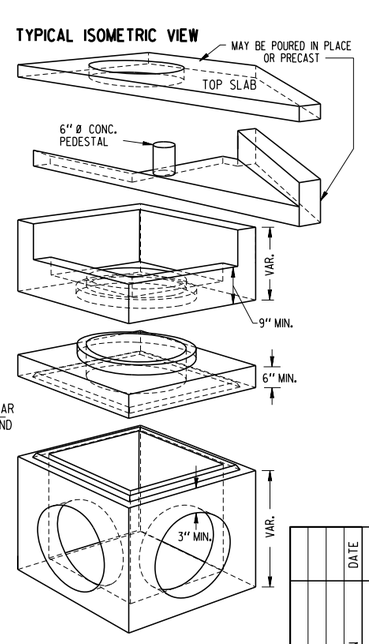

SWIVEL SECTION MAY BE USED WHERE SKEWED PIPE CONNECTS TO PRECAST CONCRETE BOX.

THE ABOVE VIEW DEPICTS PRECAST BOX. SEE SEPARATE STANDARDS FOR CIRCULAR ALTERNATE OR BUILT-IN-PLACE BOX.

DEPARTMENT OF TRANSPORTATION
STATE OF GEORGIA

STANDARD PRECAST CATCH BASINS
FOR USE WITH CURB (6" OR 8"HT.) & GUTTER

NOT TO SCALE | REDRAWN, JULY 2024 | SEPT. 1982

DATE	REVISION	BY
	REV. & REDR. R.M.U. TRA. G.M.E. CHK. R.K.C.	

(SUBMITTED) Lloyd E. Hardy
STATE ROAD & AIRPORT DESIGN ENGR.
(APPROVED) Thomas D. Moreland
STATE HIGHWAY ENGINEER

NUMBER 1033D PRECAST

CATCH BASIN

IF CATCH BASIN HAS LONGITUDINAL PIPE OVER 24", SEE DETAILS AT RIGHT

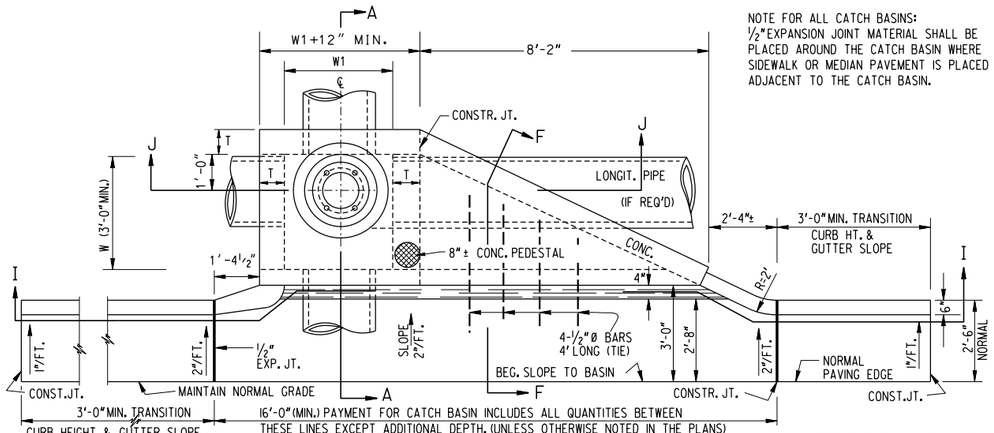

PLAN

NOTE FOR ALL CATCH BASINS:
½" EXPANSION JOINT MATERIAL SHALL BE PLACED AROUND THE CATCH BASIN WHERE SIDEWALK OR MEDIAN PAVEMENT IS PLACED ADJACENT TO THE CATCH BASIN.

NOTE: TOP SLAB MAY BE CAST IN PLACE OR PRECAST. IF SLAB IS CAST IN PLACE, BUILDERS PAPER IS TO BE PLACED BETWEEN THE CATCH BASIN AND TOP SLAB.

DETAIL OF TOP SLAB, REINF. STEEL & CLEARANCES REQ'D.

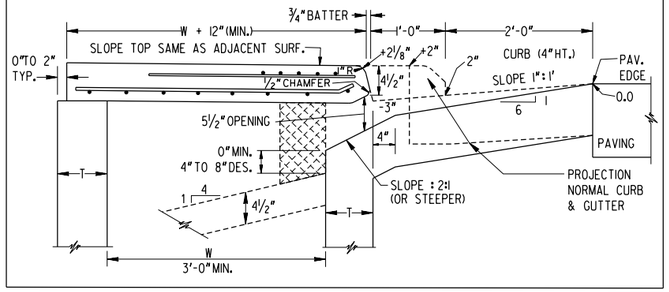

CASTING DETAILS

3° TO 7° DRAFTS TYPICAL

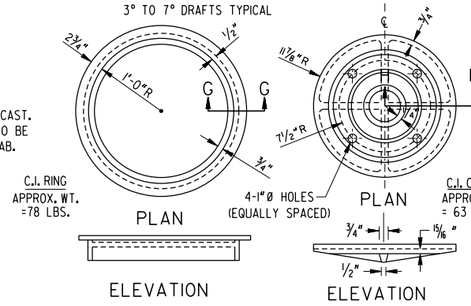

NOTE:
DETAILS NOT SHOWN FOR CATCH BASIN WITH PROTRUDED BACK WILL BE SIMILAR TO THOSE SHOWN FOR NORMAL CATCH BASIN.

CATCH BASIN - (WITH PROTRUDED BACK)

FOR USE WITH LONGITUDINAL PIPE OVER 24" OR FOR USE WITH RECESSED BOX

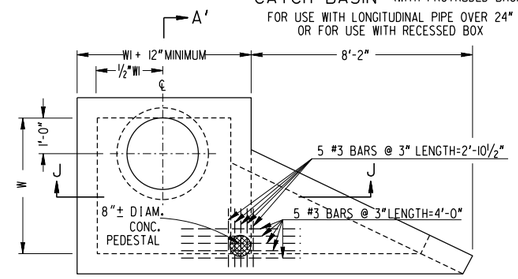

A' PART PLAN

NOTE: FOR OTHER DIMENSIONS SEE DETAILS FOR SMALL CATCH BASIN.

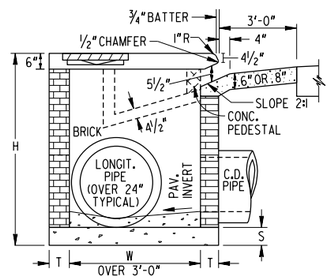

SECTION A'-A'
(FOR LARGE LONGITUDINAL PIPE)

NOTE:
RECESSED BOX TO BE USED ONLY WHERE SPECIFIED. SHALLOW LONGITUDINALS OR UNDERGROUND OBSTRUCTION TYP. H2 & W2 DIMENSIONS TO BE GIVEN IN THE PLANS.

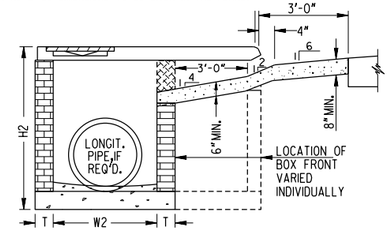

SECTION A'-A'
(FOR RECESSED BOX)

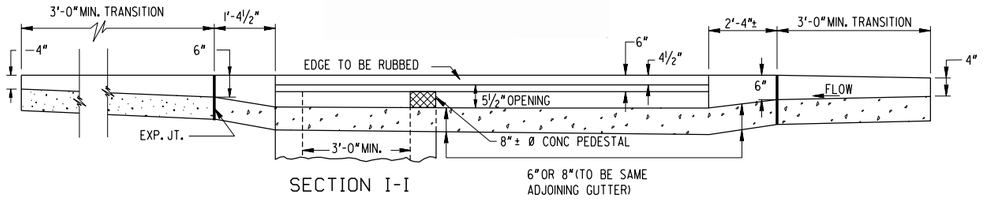

SECTION I-I

NOTE:
NORMAL SLOPE OF CONC. APRON INCREASED 4" TO 8" WHERE "H" PERMITS & LONGIT. PIPE IS LOWERED FOR OTHER REASONS

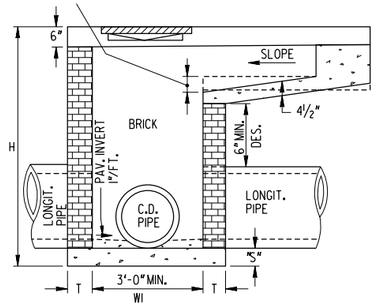

SECTION J-J

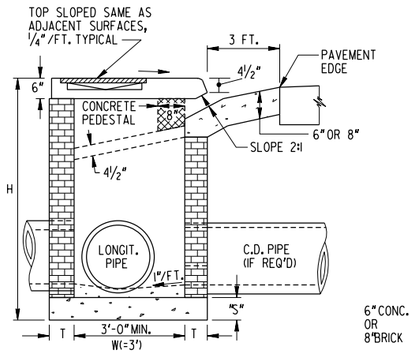

SECTION A-A

W OR W1 (MAX.)	BOTTOM SLAB MATERIALS	"S"
TO 4'-6"	NON-REINF. CONCRETE	6"
	OR BRICK	8"
OVER 4'-6"	CONC. REINF. W1 #4 BARS 12" O.C. BOTH WAYS 2" CL FROM SLAB TOP	8"

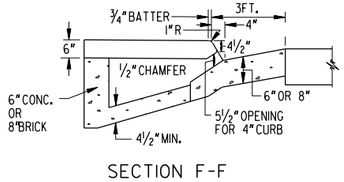

SECTION F-F

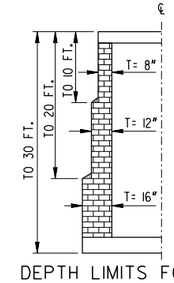

DEPTH LIMITS FOR INCREASING "T"

ALTERNATE TO INVERT

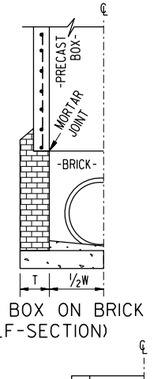

PRECAST BOX ON BRICK (HALF-SECTION)

NOTE:
SEE SEPARATE STDS. FOR PRECAST ALTERNATIVES. ADAPTERS (STD. 1040) WILL BE REQUIRED WITH CIRCULAR PRE-CAST UNITS. PRECAST BOX, CIRCULAR AND/OR BUILT-IN-PLACE CONSTRUCTION MAY BE USED IN COMBINATIONS.

DETAIL OF TOP REINFORCED CONCRETE SLAB

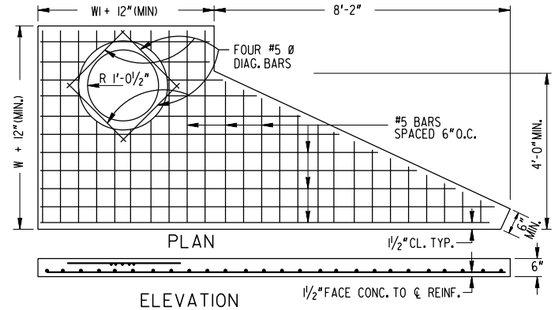

PLAN

ELEVATION

NOTES:
1. PIPE SIZES NUMBER & LOCATION AND INVERTS SHOWN ARE ILLUSTRATIVE, SEE PLANS FOR SPECIFICS. INVERTS TO BE FORMED WITH GROUT OR CONCRETE AS DIRECTED BY THE ENGINEER OR AS SHOWN IN THE PLANS.
2. TYPICAL TREATMENTS FOR SKEWED PIPE ARE; CIRCULAR PRECAST UNITS; PRECAST SWIVEL SECTIONS; PIPE ELBOWS OR INCREASED BOX SIZE TO ACCOMMODATE SKEWS.
3. SEE SEPARATE STANDARDS FOR PRECAST ALTERNATES.

DETAIL OF TOP REINFORCED CONCRETE SLAB

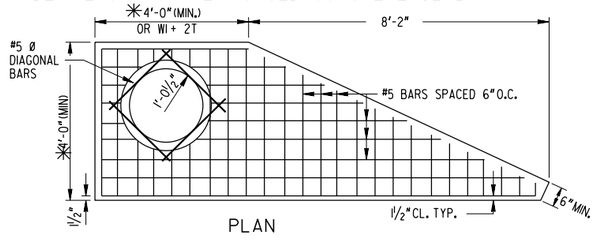

PLAN

ELEVATION

NOTES:
-ALL BARS IN PLAN VIEW ARE SPACED AT 8" O.C.
-FOR PLAN DETAIL OF REINFORCING STEEL IN TOP PORTION OF SLAB, SEE PART PLAN AT TOP RIGHT.

ΔE= MINIMUM DIFFERENCE IN ELEVATION FROM PAVEMENT EDGE TO FLOW LINE OF OUTLET PIPE.

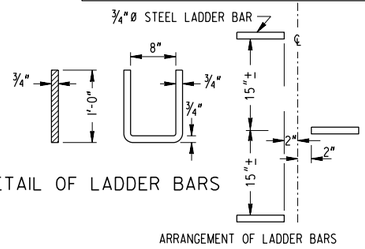

DETAIL OF LADDER BARS

ARRANGEMENT OF LADDER BARS

NOTES:
-M.H. STEPS LISTED IN GA. D.O.T. LABORATORY'S QUALIFIED PRODUCTS LIST MAY BE SUBSTITUTED.
-ALL CATCH BASINS WILL HAVE STEPS OR LADDER BARS, NUMBER & LOCATION TO BE AS DIRECTED BY THE ENGINEER.

TYPICAL MIN. DIMENSIONS			
PIPE ø	H (MIN.)	W OR W1	MIN. ΔE
12"	4'-4"	3'-0"	3'-5"
15"	4'-7"	3'-0"	3'-8"
18"	4'-10"	3'-0"	3'-11"
24"	5'-6"	3'-0"	4'-6"
30"	6'-2"	3'-7"	5'-2"
36"	6'-10"	4'-6"	5'-9"
42"	7'-4"	5'-3"	6'-1"
48"	8'-0"	6'-0"	6'-8"
54"	8'-6"	6'-8"	7'-2"
60"	9'-2"	7'-4"	7'-9"

NOTE:
THE MIN. H & ΔE GIVEN IN ABOVE TABLE ARE BASED UPON TYPICAL OUTSIDE DIAMETERS OF CONC. PIPE AND MAY BE VARIED, IF CONDITIONS PERMIT WITH VARIED DIMENSIONS SPECIFIED IN THE PLAN OR DIRECTED BY THE ENGINEER. W & W1 DIMENSIONS DO NOT HAVE TO BE EQUAL.

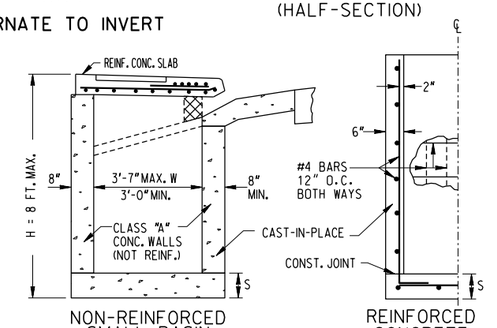

CONSTRUCTION ALTERNATES

NOTE:
DETAILS NOT SHOWN ABOVE FOR CONSTRUCTION ALTERNATES WILL BE SIMILAR TO BRICK CATCH BASIN DETAILS.

GDOT Georgia Department of Transportation | P. I. No. XXXXXXX

DEPARTMENT OF TRANSPORTATION
STATE OF GEORGIA

STANDARD CATCH BASINS

FOR USE WITH CURB (4"HT.) & GUTTER

NOT TO SCALE | REDRAWN JULY 2024 | AUG. 1982

DATE	REVISION	BY

REV. & REDR. R.M.U.
TRA. G.M.E.
CHK. R.K.C.

(SUBMITTED) Floyd E. Hardin
STATE ROAD & AIRPORT DESIGN ENGR.
(APPROVED) Thomas D. Mosley
STATE HIGHWAY ENGINEER

NUMBER 1033E

NOTE:
OPENING FOR PIPE SHALL BE THE OUTSIDE DIAMETER OF THE REQUIRED PIPE PLUS 1" MIN. OPENING SHALL HAVE CORRUGATIONS.

CATCH BASIN (IF CATCH BASIN HAS LONGITUDINAL PIPE OVER 24", SEE DETAILS AT RIGHT)

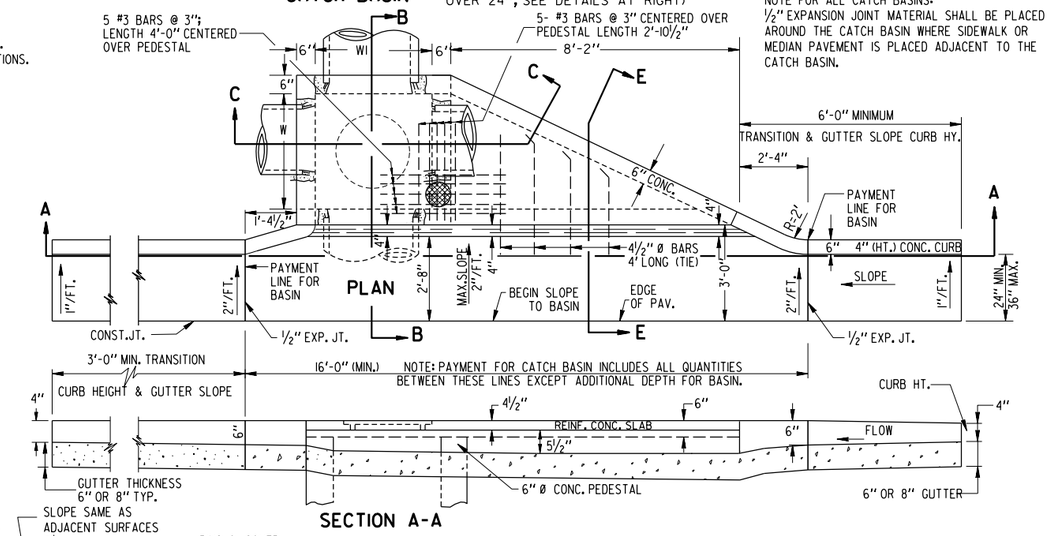

NOTE FOR ALL CATCH BASINS:
½" EXPANSION JOINT MATERIAL SHALL BE PLACED AROUND THE CATCH BASIN WHERE SIDEWALK OR MEDIAN PAVEMENT IS PLACED ADJACENT TO THE CATCH BASIN.

SECTION A-A

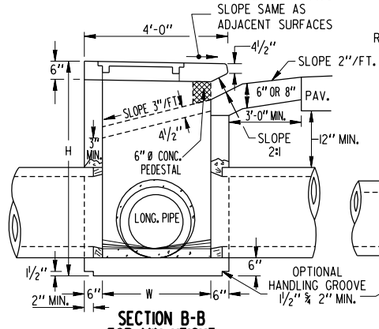

SECTION B-B FOR MIN. HEIGHT

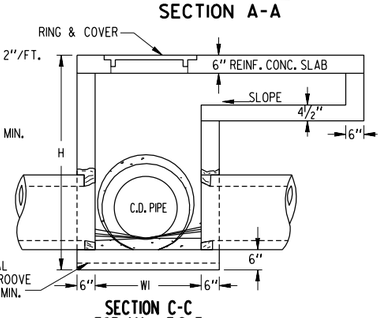

SECTION C-C FOR MIN. HEIGHT

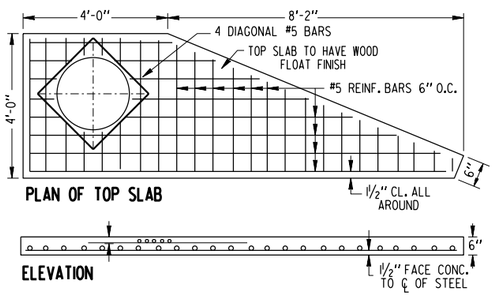

PLAN OF TOP SLAB

ELEVATION

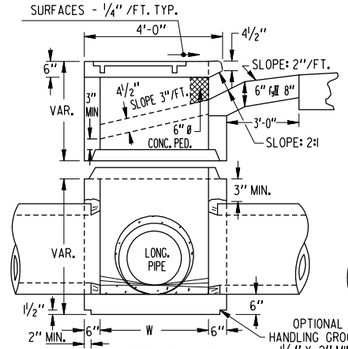

SECTION B-B FOR ADDITIONAL HEIGHT

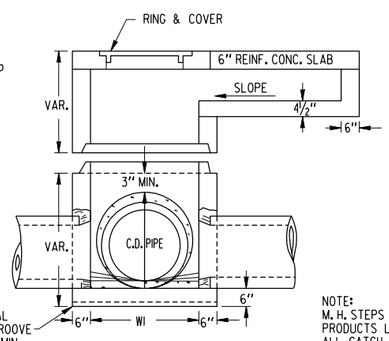

SECTION C-C FOR ADDITIONAL HEIGHT

NOTE:
M. H. STEPS LISTED IN GA. D.O.T. LABORATORY'S QUALIFIED PRODUCTS LIST MAY BE SUBSTITUTED.
ALL CATCH BASINS WILL HAVE STEPS OR LADDER BARS. NUMBER AND LOCATION OF LADDER BARS IN CATCH BASIN TO BE AS DIRECTED BY THE ENGINEER.

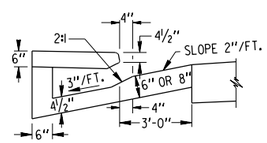

SECTION E-E

DETAIL OF TOP SLAB; REINF. STEEL & CLEARANCES REQUIRED

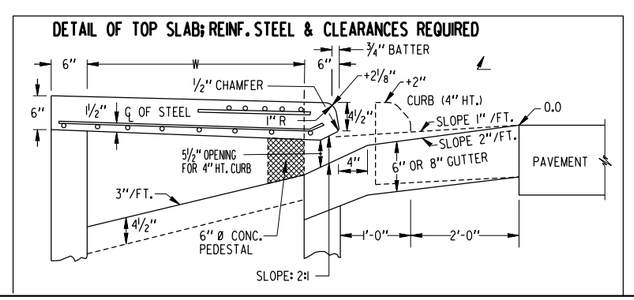

DETAIL AND ARRANGEMENT OF LADDER BARS

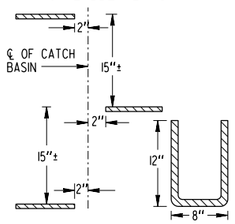

METHOD OF CONNECTING PIPE (WHERE CONCRETE PIPE HAS TO BE CUT)



PLAN

STEP 1
CUT CONCRETE PIPE LEAVING APPROXIMATELY 3" OF REINFORCING MESH EXPOSED.

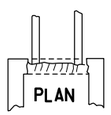

PLAN

STEP 2
POSITION PIPE APPROXIMATELY 3" INTO OPENING OF WALL.

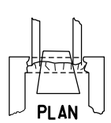

PLAN

STEP 3
POSITION CONICAL CORE INSIDE OF PIPE AND SEAL WITH GROUT (1/2" MIN. THICKNESS OF GROUT). REMOVE CORE WHEN SET AND RUB GROUT TO SEAL JOINTS.

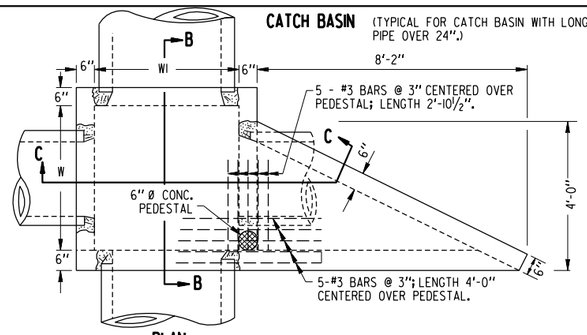

PLAN

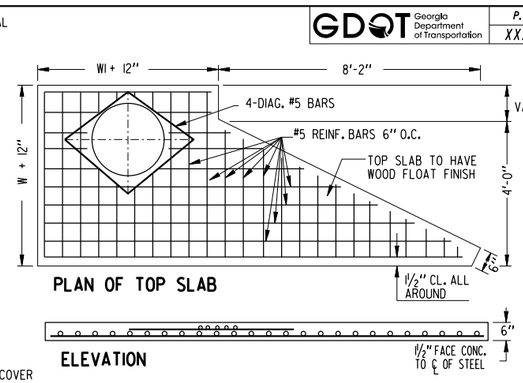

PLAN OF TOP SLAB

ELEVATION

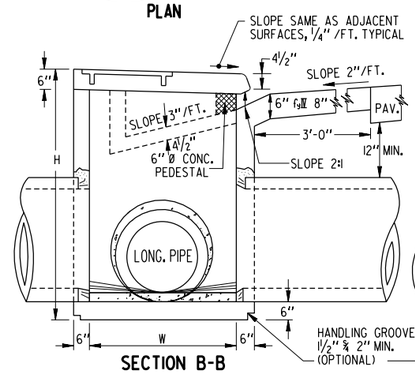

SECTION B-B

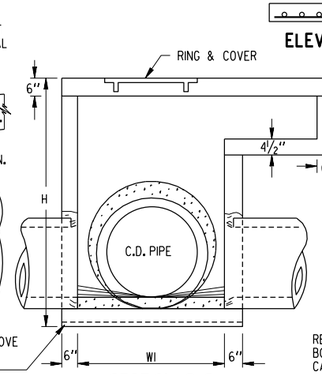

SECTION C-C

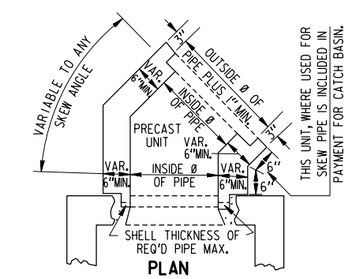

PLAN

A METHOD OF CONNECTING SKEWED PIPE

IF THIS SWIVEL SECTION SLAB IS USED TO REDUCE THE W AND WI DIMENSIONS, INCREASE THE MIN. THICKNESS TO 9" AND USE REINF. STEEL. SEE DETAIL BELOW.

DETAIL FOR REINFORCED STEEL

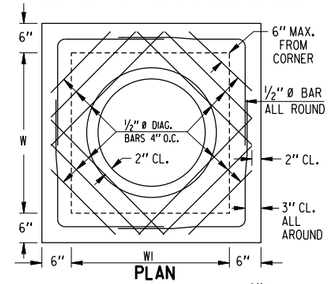

PLAN

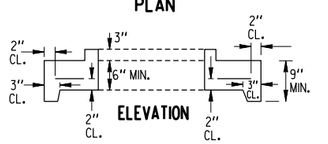

ELEVATION

TYPICAL ISOMETRIC VIEW

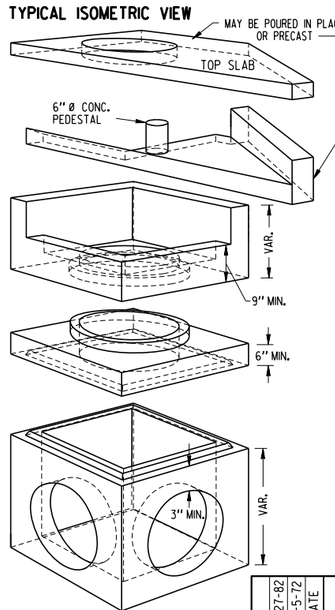

SWIVEL SECTION MAY BE USED WHERE SKEWED PIPE CONNECTS TO PRECAST CONCRETE BOX.

NOTE:
THE ABOVE VIEW DEPICTS PRECAST BOX. SEE SEPARATE STANDARDS FOR CIRCULAR ALTERNATE OR BUILT-IN-PLACE BOX.

REINFORCING - ISOMETRIC VIEW

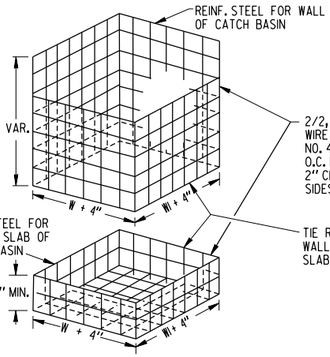

NOTE:
REINFORCING SHOWN ABOVE IS REQUIRED FOR BOX SHAPED BASIN. REINFORCING FOR CIRCULAR PRECAST ALTERNATE SHALL BE ACCORDING TO STD. 1040.

ALL JOINTS BETWEEN PRECAST RISERS OR BETWEEN PRECAST BASE AND RISER WILL BE KEYED. KEYED JOINTS SHOWN ARE TYPICAL AND MAY BE VARIED.

DIMENSIONS FOR CATCH BASINS		
PIPE SIZE	NORMAL W OR W_1	MIN H
12"	3'-0"	4'-4"
15"	3'-0"	4'-7"
18"	3'-0"	4'-10"
24"	3'-0"	5'-6"
30"	3'-6"	6'-2"
36"	4'-0"	6'-10"
42"	5'-0"	7'-4"
48"	5'-0"	8'-0"
54"	6'-0"	8'-6"
60"	6'-0"	9'-2"

NOTE:
DIMENSIONS FOR CATCH BASINS ARE BASED UPON TYPICAL OUTSIDE DIAMETERS OF CONCRETE PIPES AND MAY BE VARIED IF CONDITIONS PERMIT AND THE ENGINEER APPROVES. W & WI DIMENSIONS DO NOT HAVE TO BE EQUAL.

ALTERNATE:
BUILT-IN-PLACE, PRECAST BOX, AND/OR PRECAST CIRCULAR UNITS WITH THE REQUIRED ADAPTERS, REDUCERS, FITTINGS, CONNECTIONS, ETC. MAY BE USED IN COMBINATIONS.

NOTE:
FOR RING & COVER DETAILS AND OTHER DETAILS NOT SHOWN, SEE STANDARD 1033E FOR BUILT-IN-PLACE CATCH BASIN.

GDOT Georgia Department of Transportation | P. I. No. XXXXXXX

DEPARTMENT OF TRANSPORTATION
STATE OF GEORGIA

STANDARD
PRECAST CATCH BASINS
FOR USE WITH CURB (4" HT.) & GUTTER

BY	DATE	REVISION
R.M.U.	9-27-82	GENERAL REVISIONS
R.M.U.	5-5-72	REV. C. B. THROAT DESIGN

NOT TO SCALE — REDRAWN JULY 2024 — FEB. 1967

DESIGNED ____ (SUBMITTED)
DRAWN R.W.H.
TRACED A.V.S.
CHECKED R.B.S.
(APPROVED) STATE ROAD DESIGN ENGINEER
STATE HIGHWAY ENGINEER

NUMBER 1033E PRECAST

GDOT Georgia Department of Transportation | P. I. No. XXXXXXX

CATCH BASIN

(IF CATCH BASIN HAS LONGITUDINAL PIPE OVER 24", SEE DETAILS AT RIGHT)

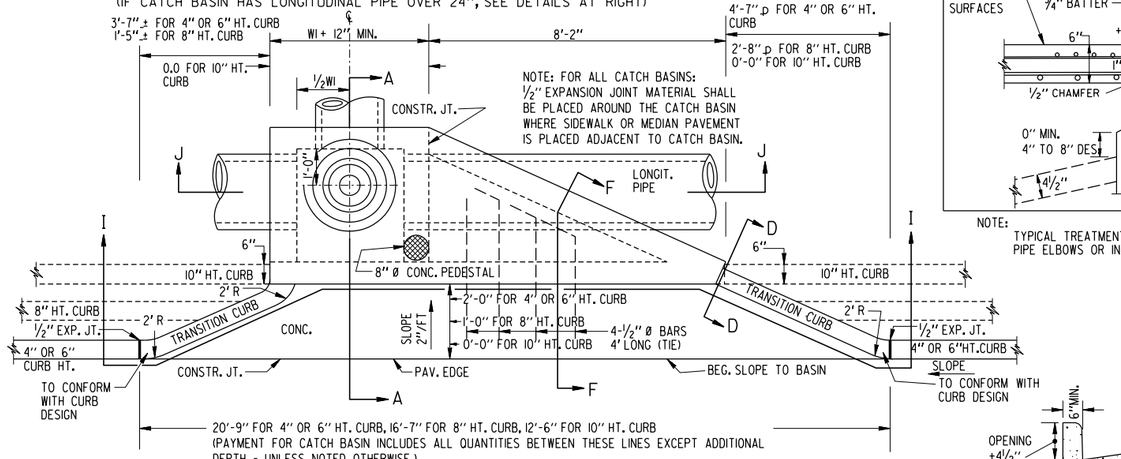

PLAN VIEW

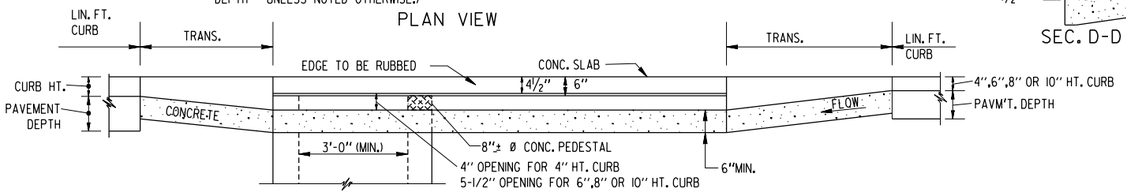

SECTION I-I

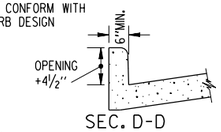

SEC. D-D

DETAIL OF TOP SLAB, REINF. STEEL & CLEARANCES REQ'D.

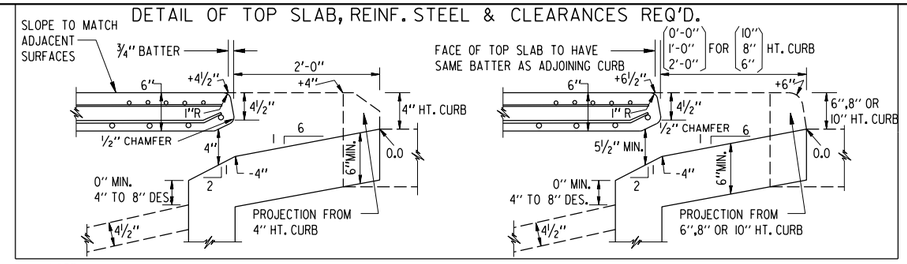

NOTE: TYPICAL TREATMENTS FOR SKEWED PIPE ARE: CIRCULAR PRECAST UNITS; PRECAST SWIVEL SECTIONS; PIPE ELBOWS OR INCREASED BOX SIZES TO ACCOMMODATE THE SKEW.

CASTING DETAILS

3° TO 7° DRAFTS TYPICAL

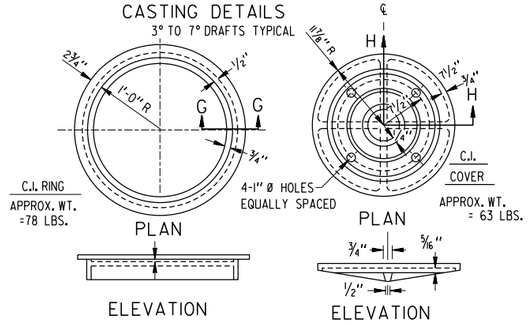

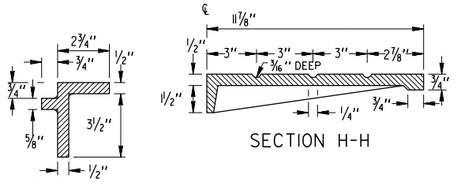

TOP SLAB MAY BE CAST IN PLACE OR PRECAST. IF SLAB IS CAST IN PLACE, BUILDER'S PAPER IS TO BE PLACED BETWEEN THE CATCH BASIN & TOP SLAB

CATCH BASIN (WITH PROTRUDED BACK)

(FOR USE WITH LARGE LONGITUDINAL PIPE OR RECESSED BOX)

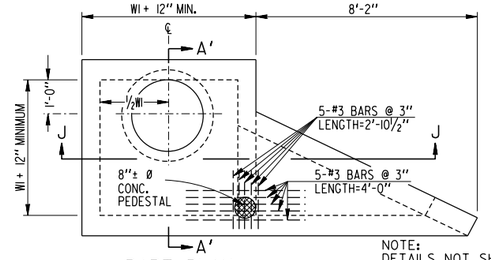

PART PLAN

NOTE: DETAILS NOT SHOWN HERE WILL BE SIMILAR TO THESE AT FAR LEFT FOR NORMAL CATCH BASIN.

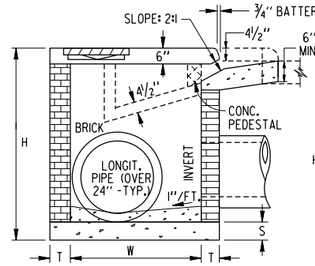

SECTION A'-A'
(FOR LARGE LONGITUDINAL PIPE)

NOTE: RECESSED BOX TO BE USED ONLY WHERE SPECIFIED IN THE PLANS. LONGIT. PIPE OR UNDERGROUND OBSTRUCTION TYPICAL.

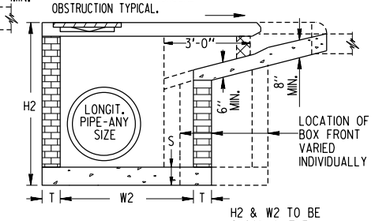

SECTION A'-A'
(FOR RECESSED BOX)

H2 & W2 TO BE SHOWN IN THE PLANS

NOTE: NORMAL SLOPE OF CONCRETE APRON TO BE INCREASED BY 4" TO 8" WHERE "H" PERMITS AND LONGITUDINAL PIPE IS LOWERED FOR OTHER REASONS

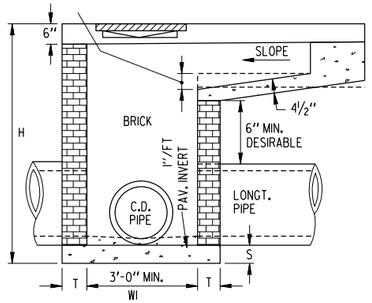

SECTION J-J

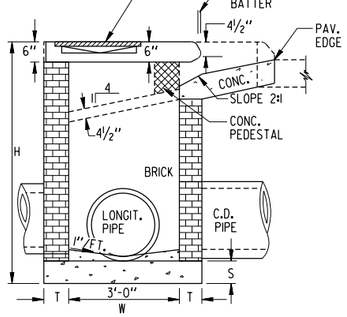

SECTION A-A

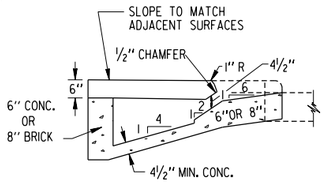

SECTION F-F

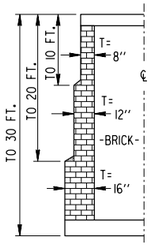

DEPTH LIMITS FOR INCREASING "T"

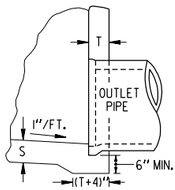

ALTERNATE TO INVERT

NOTE: SEE SEPARATE STDS. FOR PRECAST ALTERNATES. ADAPTERS (STD. 1040.) WILL BE REQUIRED WITH CIRCULAR PRECAST UNITS. PRECAST BOX, CIRCULAR AND/OR BUILT-IN PLACE CONSTRUCTION MAY BE USED IN COMBINATIONS.

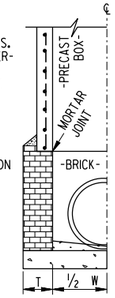

PRECAST BOX ON BRICK (HALF SECTION)

DETAIL OF TOP REINFORCED CONCRETE SLAB

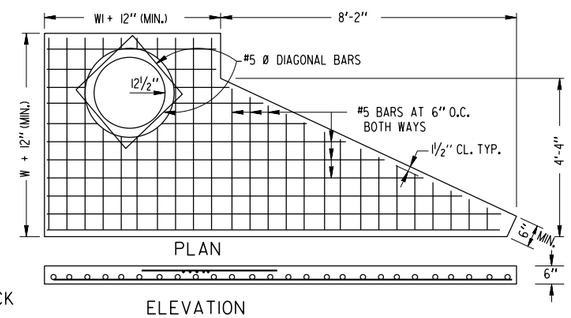

PLAN

ELEVATION

DETAIL OF TOP REINFORCED CONCRETE SLAB

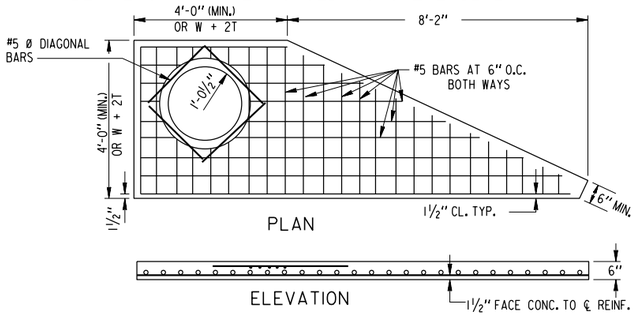

PLAN

ELEVATION

NOTE: ALL BARS IN PLAN VIEW ARE PLACED AT 6" O.C.

NOTE: FOR DETAIL OF REINFORCING STEEL IN TOP PORTION OF SLAB SEE PART PLAN @ TOP RIGHT.

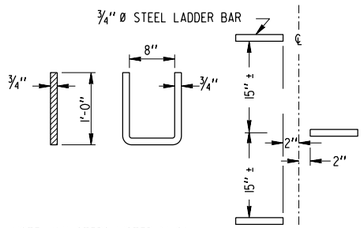

NOTE: M.H. STEPS LISTED IN GA. D.O.T. LABORATORY'S QUALIFIED PRODUCTS LIST MAY BE SUBSTITUTED.

ALL CATCH BASINS WILL HAVE STEPS OR LADDER BARS. NUMBER & LOCATION TO BE AS DIRECTED BY THE ENGINEER.

DETAIL OF LADDER BARS

W OR WI (MAX.)	BOTTOM SLAB MATERIALS	S
TO 4'-6"	NON-REINF. CONCRETE	6"
	OR BRICK	8"
OVER 4'-6"	CONC. REINF. WI #4 BARS 12" O.C. BOTH WAYS, 2" CL FROM SLAB TOP	8"

TYPICAL MAX. DIMENSIONS			
PIPE Ø	H (MIN.)	W OR WI	△E
12	4'-4"	3'-0"	3'-1"
15	4'-7"	3'-0"	3'-4"
18	4'-10"	3'-0"	3'-7"
24	5'-6"	3'-0"	4'-2"
30	6'-2"	3'-7"	4'-10"
36	6'-10"	4'-6"	5'-5"
42	7'-4"	5'-3"	5'-9"
48	8'-0"	6'-0"	6'-4"
54	8'-6"	6'-8"	6'-10"
60	9'-2"	7'-4"	7'-5"

NOTE: THE MIN.H & MIN. △E GIVEN IN THE ABOVE TABLE ARE BASED UPON TYPICAL OUTSIDE DIAMETERS OF CONC. PIPE AND MAY BE VARIED, IF CONDITIONS PERMIT WITH THE VARIED DIMENSIONS SPECIFIED IN THE PLANS OR AS DIRECTED BY THE ENGINEER. W & WI DIMENSIONS DO NOT HAVE TO BE EQUAL.

△E = MINIMUM DIFFERENCE IN ELEVATION FROM PAVEMENT EDGE TO FLOW LINE OF OUTLET PIPE.

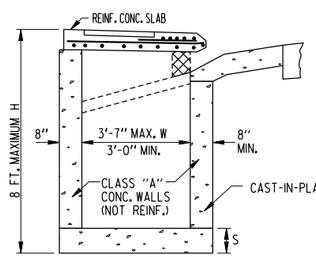

NON REINFORCED SMALL BASIN
(WI NOT OVER 3'-7")

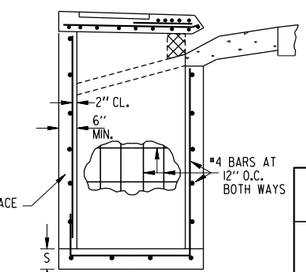

REINFORCED CONCRETE

CONSTRUCTION ALTERNATES

NOTE: DETAILS NOT SHOWN ABOVE FOR CONCRETE CATCH BASINS WILL BE SIMILAR TO THOSE SHOWN FOR BRICK CATCH BASINS

NOTE: PIPE SIZES, NUMBER, ALIGNMENT, & INVERTS SHOWN ARE ILLUSTRATIVE. SEE PLANS FOR SPECIFICS. INVERTS TO BE FORMED WITH GROUT OR CONCRETE AS DIRECTED BY THE ENGINEER OR AS SHOWN IN THE PLANS.

SEE SEPARATE STANDARDS FOR PRECAST ALTERNATES.

DEPARTMENT OF TRANSPORTATION
STATE OF GEORGIA

STANDARD CATCH BASINS

FOR USE WITH HEADER OR INTEGRAL CURBS
4", 6", 8" OR 10" HEIGHTS

NOT TO SCALE | REDRAWN JULY 2024 | AUG. 1982

REVISION | DATE | BY

REV &.
REDR.R.M.H.
TRA. G.M.E.
CHK. R.K.C.

(SUBMITTED) Floyd E. Hardy
STATE ROAD & AIRPORT DESIGN ENGR.
(APPROVED) Thomas D. Wildelove
STATE HIGHWAY ENGINEER

NUMBER 1033F

GDOT Georgia Department of Transportation | P. I. No. XXXXXXX

3'-7"± FOR 4" OR 6" HT. CURB;
1'-5"± FOR 8" HT. CURB;
0'-0" FOR 10" HT.CURB;

CATCH BASIN (IF CATCH BASIN HAS LONGITUDINAL PIPE OVER 24", SEE DETAILS AT RIGHT)

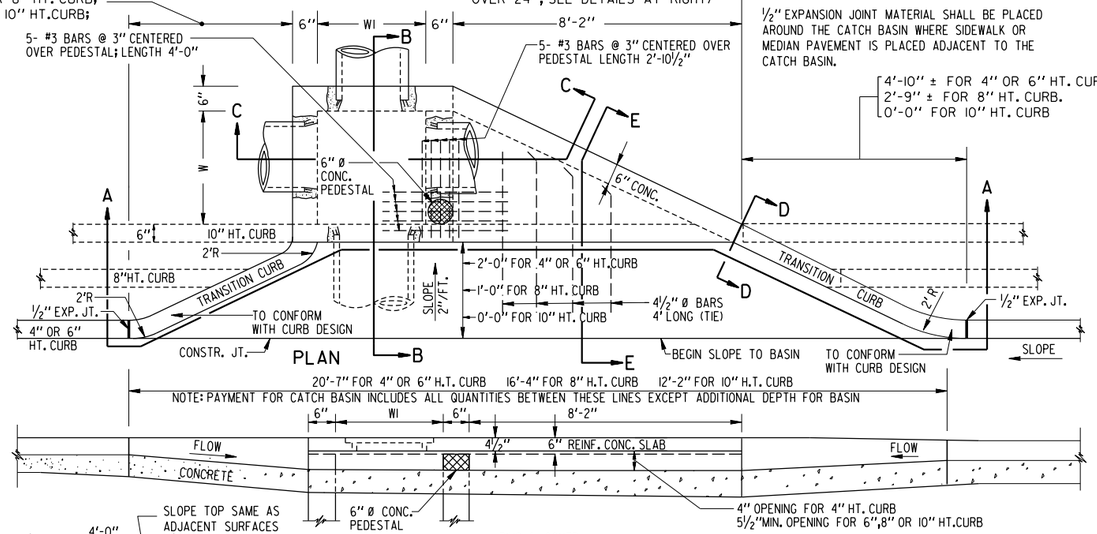

NOTE FOR ALL CATCH BASINS:

½" EXPANSION JOINT MATERIAL SHALL BE PLACED AROUND THE CATCH BASIN WHERE SIDEWALK OR MEDIAN PAVEMENT IS PLACED ADJACENT TO THE CATCH BASIN.

4'-10" ± FOR 4" OR 6" HT. CURB.
2'-9" ± FOR 8" HT. CURB.
0'-0" FOR 10" HT. CURB

CATCH BASIN (TYPICAL FOR CATCH BASIN WITH LONGITUDINAL PIPE OVER 24".)

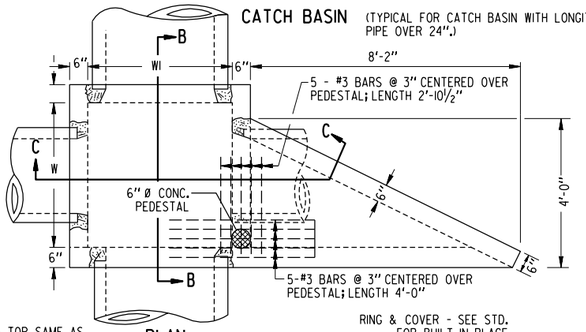

PLAN

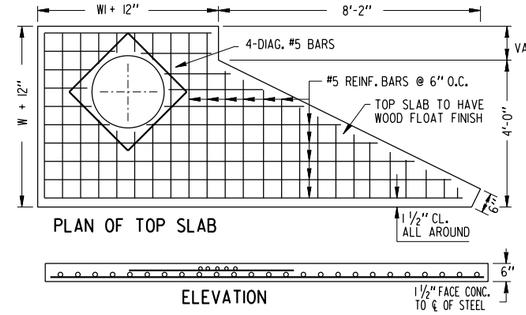

PLAN OF TOP SLAB

ELEVATION

1½" FACE CONC. TO ℄ OF STEEL

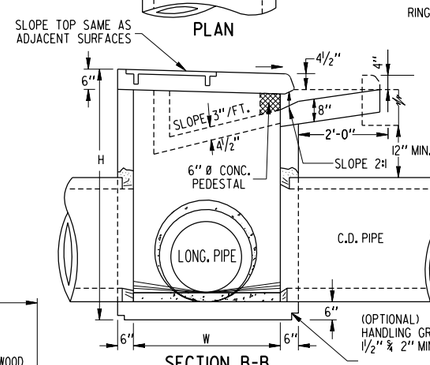

SECTION B-B

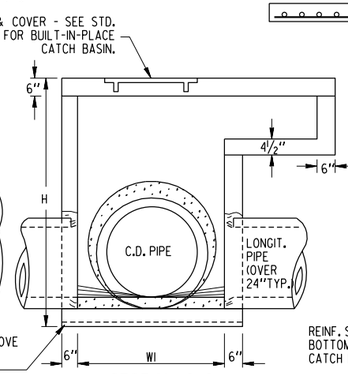

SECTION C-C

REINFORCING - ISOMETRIC VIEW

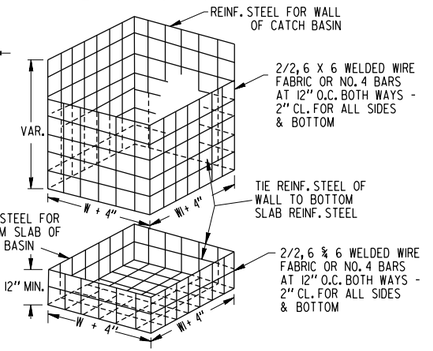

NOTE:
REINFORCING SHOWN ABOVE IS REQUIRED FOR BOX SHAPED BASIN. REINFORCING FOR CIRCULAR PRECAST ALTERNATE SHALL BE ACCORDING TO STD. 1040.

ALL JOINTS BETWEEN PRECAST RISERS OR BETWEEN PRECAST BASE AND RISER WILL BE KEYED. KEYED JOINTS SHOWN ARE TYPICAL AND MAY BE VARIED.

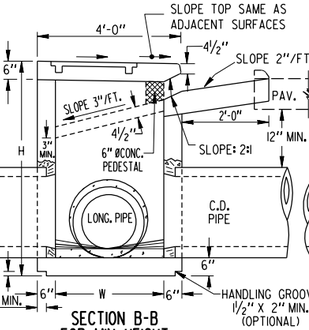

SECTION B-B FOR MIN. HEIGHT

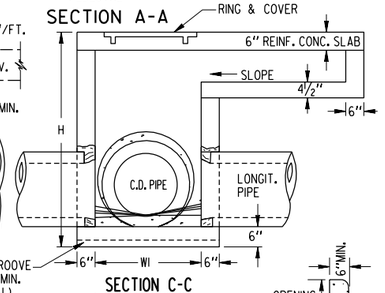

SECTION C-C FOR MIN. HEIGHT

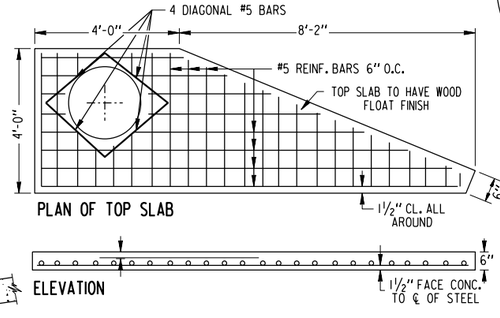

PLAN OF TOP SLAB

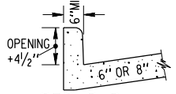

SEC. D-D

ELEVATION

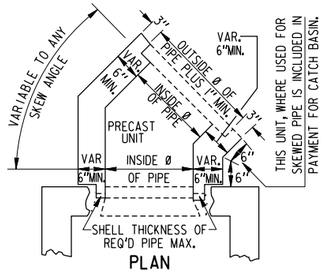

PLAN

(SEE SEPARATE STANDARDS FOR ALTERNATES)

METHOD OF CONNECTING SKEWED PIPE

IF THIS SWIVEL SECTION SLAB IS USED TO REDUCE THE W AND WI DIMENSIONS, INCREASE THE MIN. THICKNESS TO 9" AND USE REINF. STEEL. SEE DETAIL BELOW.

TYPICAL ISOMETRIC VIEW

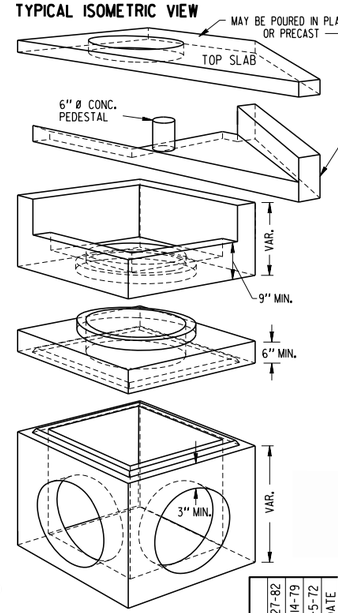

DIMENSIONS FOR CATCH BASINS		
PIPE SIZE	NORMAL W OR W_1	MIN H
12"	3'-0"	4'-4"
15"	3'-0"	4'-7"
18"	3'-0"	4'-10"
24"	3'-0"	5'-6"
30"	3'-6"	6'-2"
36"	4'-0"	6'-10"
42"	5'-0"	7'-4"
48"	5'-0"	8'-0"
54"	6'-0"	8'-6"
60"	6'-0"	9'-2"

NOTE:
DIMENSIONS FOR CATCH BASINS ARE BASED UPON TYPICAL OUTSIDE DIAMETERS OF CONCRETE PIPES AND MAY BE VARIED IF CONDITIONS PERMIT AND THE ENGINEER APPROVES. W & WI DIMENSIONS DO NOT HAVE TO BE EQUAL.

ALTERNATE:
BUILT-IN-PLACE, PRECAST BOX, AND/OR PRECAST CIRCULAR UNITS WITH THE REQUIRED ADAPTERS, REDUCERS, FITTINGS, CONNECTIONS, ETC. MAY BE USED IN COMBINATIONS.

NOTE:
FOR RING & COVER DETAILS AND OTHER DETAILS NOT SHOWN, SEE STANDARD 1033F FOR BUILT-IN-PLACE CATCH BASIN.

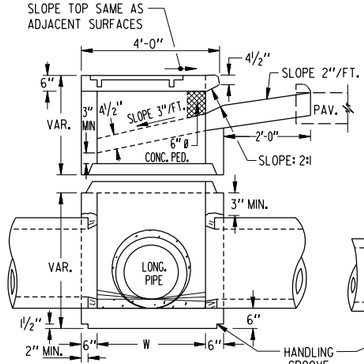

SECTION B-B FOR ADDITIONAL HEIGHT

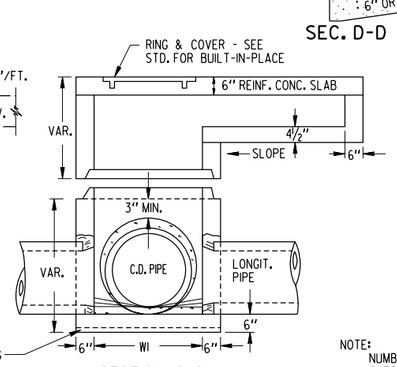

SECTION C-C FOR ADDITIONAL HEIGHT

DETAIL AND ARRANGEMENT OF LADDER BARS

NOTE:
AN ALTERNATE TYPE STEP APPROVED BY THE LABORATORY MAY BE SUBSTITUTED.

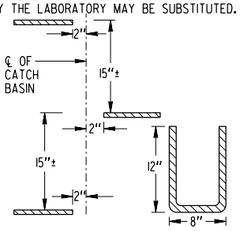

NOTE:
NUMBER AND LOCATION OF LADDER BARS IN CATCH BASIN TO BE AS DIRECTED BY THE ENGINEER.

ALL CATCH BASINS WILL HAVE STEPS OR LADDER BARS.

METHOD OF CONNECTING PIPE (WHERE CONCRETE PIPE HAS TO BE CUT)

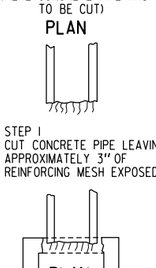

DETAIL FOR REINFORCED STEEL

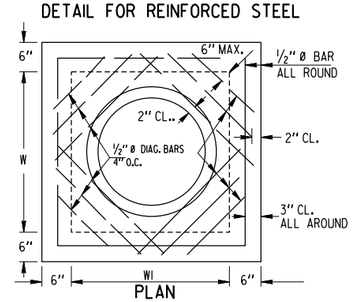

SWIVEL SECTION MAY BE USED WHERE SKEWED PIPE CONNECTS TO PRECAST CONCRETE BOX.

NOTE:
THE ABOVE VIEW DEPICTS PRECAST BOX. SEE SEPARATE STANDARDS FOR CIRCULAR ALTERNATE OR BUILT-IN-PLACE BOX.

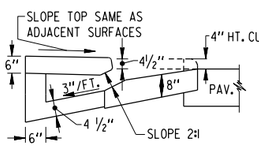

SECTION E-E

DETAIL OF TOP SLAB; REINF. STEEL & CLEARANCES REQUIRED

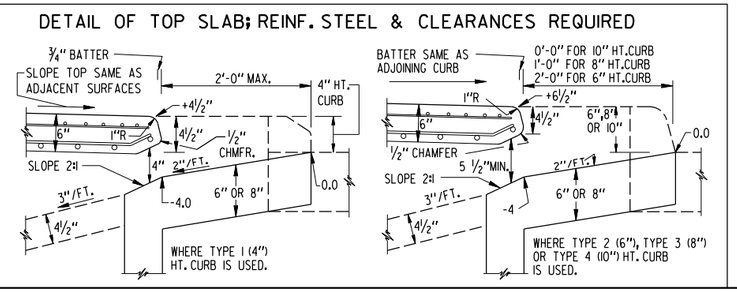

	GEN. REVISIONS	9-27-82
R.M.U.	USE W. HEADER CURB	8-14-79
R.M.U.	REV. C.B. THROAT DESIGN	5-5-72
R.M.U.	REVISION	DATE
BY		

DEPARTMENT OF TRANSPORTATION
STATE OF GEORGIA

STANDARD

PRECAST CATCH BASINS

FOR USE WITH HEADER OR INTEGRAL CURBS
4", 6", 8" OR 10" HEIGHTS

NOT TO SCALE — REDRAWN JULY 2024 — FEB 1967

DESIGNED ____ (SUBMITTED) STATE ROAD DESIGN ENGINEER
DRAWN R.W.H.
TRACED A.V.S.
CHECKED R.B.S. (APPROVED) STATE HIGHWAY ENGINEER

NUMBER 1033F PRECAST

GDOT Georgia Department of Transportation | P. I. No. XXXXXXX

CATCH BASIN

(IF CATCH BASIN HAS LONGITUDINAL PIPE OVER 24", SEE DETAILS AT RIGHT)

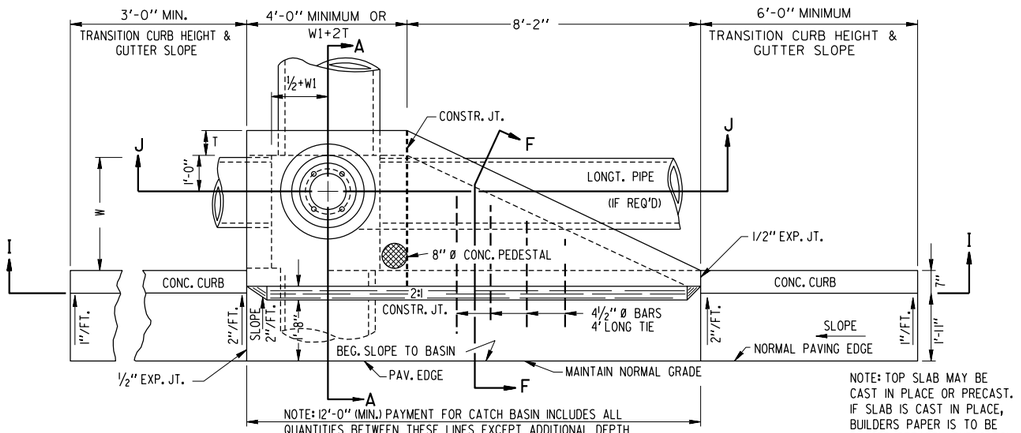

PLAN

NOTE: TOP SLAB MAY BE CAST IN PLACE OR PRECAST. IF SLAB IS CAST IN PLACE, BUILDERS PAPER IS TO BE PLACED BETWEEN THE CATCH BASIN AND TOP SLAB.

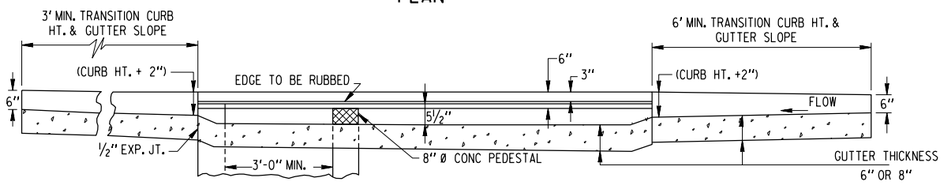

SECTION I-I

NOTE: NORMAL SLOPE OF CONCRETE APRON TO BE INCREASED BY 4" TO 8" WHERE "H" PERMITS AND LONGITUDINAL PIPE IS LOWERED FOR OTHER REASONS.

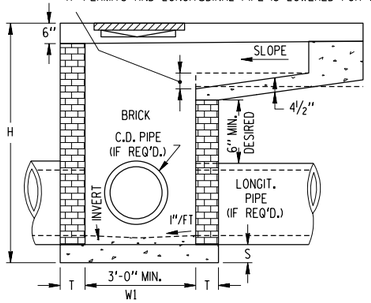

SECTION J-J

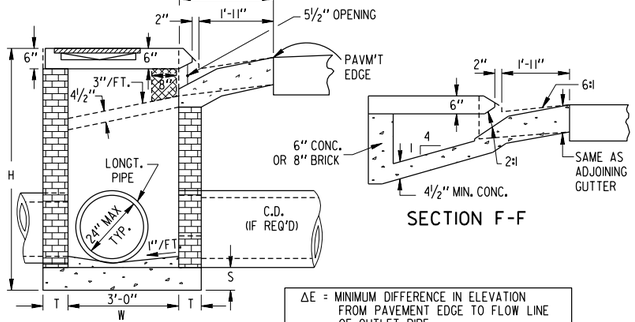

SECTION A-A

SECTION F-F

ΔE = MINIMUM DIFFERENCE IN ELEVATION FROM PAVEMENT EDGE TO FLOW LINE OF OUTLET PIPE.

DETAIL OF TOP REINFORCED CONCRETE SLAB

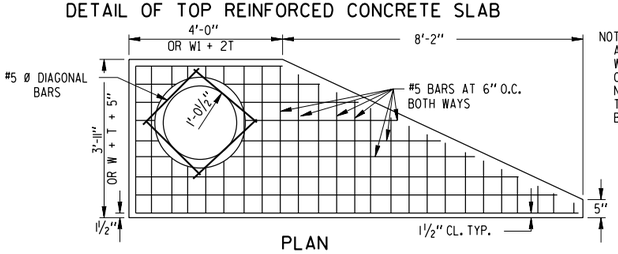

PLAN

NOTE: ALL CATCH BASINS WILL HAVE STEPS OR LADDER BARS, NUMBER & LOCATION TO BE AS DIRECTED BY THE ENGINEER

NOTE: ALL BARS IN PLAN VIEW ARE SPACED AT 6" O.C.

NOTE: FOR PLAN DETAIL OF REINFORCING STEEL IN TOP PORTION OF SLAB, SEE PART PLAN AT TOP RIGHT.

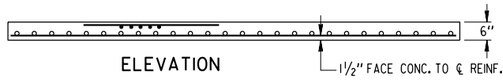

ELEVATION

DETAIL OF LADDER BARS

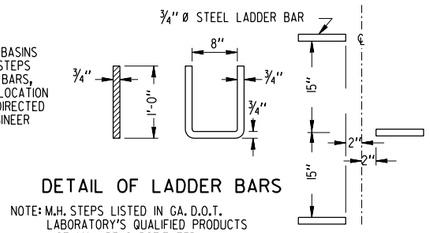

NOTE: M.H. STEPS LISTED IN GA. D.O.T. LABORATORY'S QUALIFIED PRODUCTS LIST MAY BE SUBSTITUTED.

ARRANGEMENT OF LADDER BARS

W OR W1 (MAX.)	BOTTOM SLAB MATERIALS	BOTTOM SLAB S
TO 4'-6"	NON-REINF. CONCRETE	6"
	OR BRICK	8"
OVER 4'-6"	CONC. REINF. W1 #4 BARS 12" O.C. BOTH WAYS 2" CL FROM SLAB TOP	8"

DETAIL OF TOP SLAB, REINF. STEEL & CLEARANCES REQ'D.

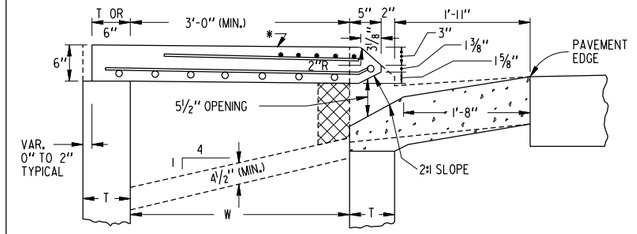

* SLOPE TOP TO MATCH ADJACENT SURFACES

CASTING DETAILS

3° TO 7° DRAFTS TYPICAL

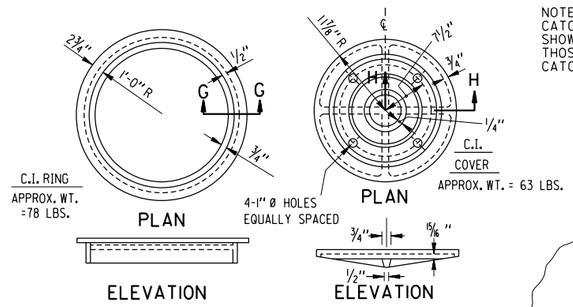

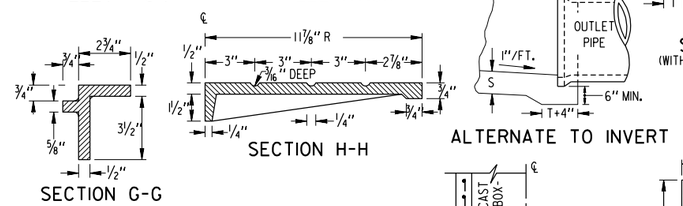

ALTERNATE TO INVERT

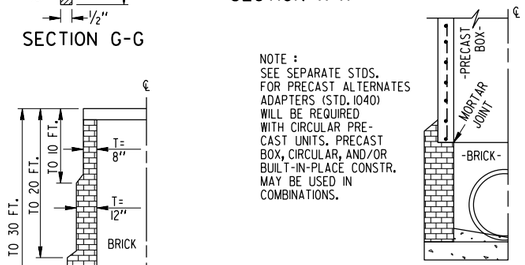

DEPTH LIMITS FOR INCREASING "T"

TYPICAL MIN. DIMENSIONS			
PIPE Ø	H (MIN.)	W OR W1	ΔE (MIN)
12	4'-4"	3'-0"	3'-3"
15	4'-7"	3'-0"	3'-6"
18	4'-10"	3'-0"	3'-9"
24	5'-6"	3'-0"	4'-4"
30	6'-2"	3'-7"	5'-0"
36	6'-10"	4'-6"	5'-7"
42	7'-4"	5'-3"	5'-11"
48	8'-0"	6'-0"	6'-6"
54	8'-6"	6'-8"	7'-0"
60	9'-2"	7'-4"	7'-7"

NOTE:
THE MIN. H & MIN. ΔE GIVEN IN ABOVE TABLE ARE BASED UPON TYPICAL OUTSIDE DIAMETERS OF CONC. PIPE AND MAY BE VARIED IF CONDITIONS PERMIT WITH VARIED DIMENSIONS SPECIFIED IN THE PLANS OR DIRECTED BY THE ENGINEER. W. & W1 DIMENSIONS DO NOT HAVE TO BE EQUAL.

(TYPICAL FOR CATCH BASIN WITH LARGE LONGITUDINAL PIPE OR RECESSED BOX)

CATCH BASIN - (WITH PROTRUDED BACK)

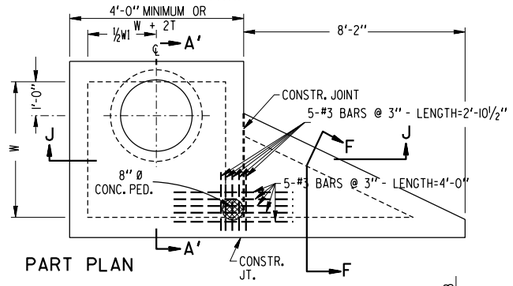

PART PLAN

NOTE:
CATCH BASIN DETAILS NOT SHOWN HERE WILL BE SIMILAR TO THOSE AT LEFT FOR NORMAL CATCH BASIN.

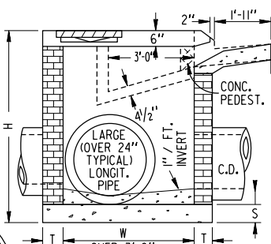

SECTION A'-A'
(WITH LARGE LONGITUDINAL PIPE)

NOTE:
RECESSED BOX TO BE USED ONLY WHERE SPECIFIED. SHALLOW LONG. PIPE OR UNDERGROUND OBSTRUCTION TYPICAL.

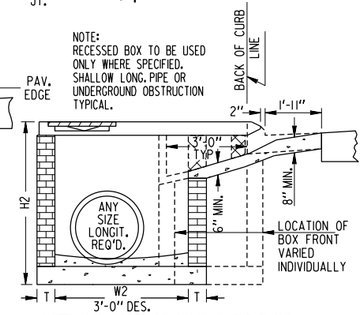

NOTE: H2 & W2 TO BE SHOWN IN THE PLANS

SECTION A'-A'
(WITH RECESSED BOX)

DETAIL OF TOP REINFORCED CONCRETE SLAB

NOTE :
SEE SEPARATE STDS. FOR PRECAST ALTERNATES ADAPTERS (STD. 1040) WILL BE REQUIRED WITH CIRCULAR PRE-CAST UNITS. PRECAST BOX, CIRCULAR, AND/OR BUILT-IN-PLACE CONSTR. MAY BE USED IN COMBINATIONS.

PRECAST BOX ON BRICK
(HALF-SECTION)

NOTE:
TYPICAL TREATMENT FOR SKEWED PIPE ARE: CIRCULAR PRECAST SWIVEL SECTIONS; PIPE ELBOWS OR INCREASED BOX SIZE.

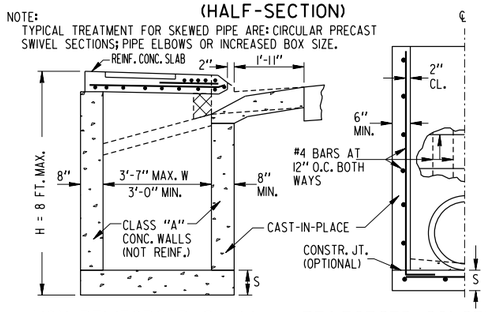

NON-REINFORCED SMALL BASIN (W1 NOT OVER 3'-7")

REINFORCED CONCRETE (HALF-SECTION)

CONSTRUCTION ALTERNATES

NOTE: DETAILS NOT SHOWN ABOVE FOR CONSTRUCTION ALTERNATES WILL BE SIMILAR TO BRICK CATCH BASIN DETAILS.

SEE SEPARATE STANDARDS FOR PRECAST ALTERNATES.

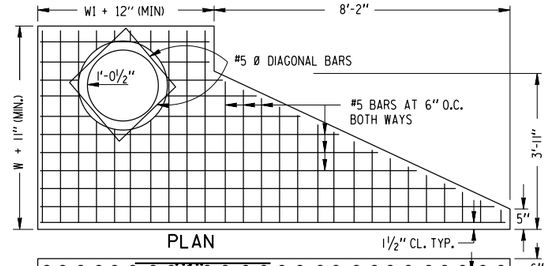

PLAN

ELEVATION

NOTE: PIPE SIZES, NUMBER, ALIGNMENT, AND INVERT SHOWN ARE ILLUSTRATIVE. SEE PLANS FOR SPECIFICS. INVERTS TO BE FORMED WITH GROUT OR CONCRETE AS DIRECTED BY THE ENGINEER OR AS SHOWN IN THE PLANS.

DEPARTMENT OF TRANSPORTATION
STATE OF GEORGIA

STANDARD CATCH BASINS

FOR USE WITH CURB (6" MOUNTABLE) & GUTTER

NOT TO SCALE | REDRAWN JULY 2024 | DEC. 1985

DATE / REVISION / BY

DES. R.M.U.
DRW. R.M.U.
TRA. G.M.E.
CHK. R.K.C.

(SUBMITTED) Lloyd E. Hardy
STATE ROAD & AIRPORT DESIGN ENGR.

(APPROVED) Hal Rivoire
STATE HIGHWAY ENGINEER

NUMBER 1033G

GDOT Georgia Department of Transportation | P. I. No. XXXXXXX

NOTE: OPENING FOR PIPE SHALL BE THE OUTSIDE DIAMETER OF THE REQUIRED PIPE PLUS 1" MIN OPENING SHALL HAVE CORRUGATIONS.

CATCH BASIN (IF CATCH BASIN HAS LONGITUDINAL PIPE OVER 24", SEE DETAILS AT RIGHT.)

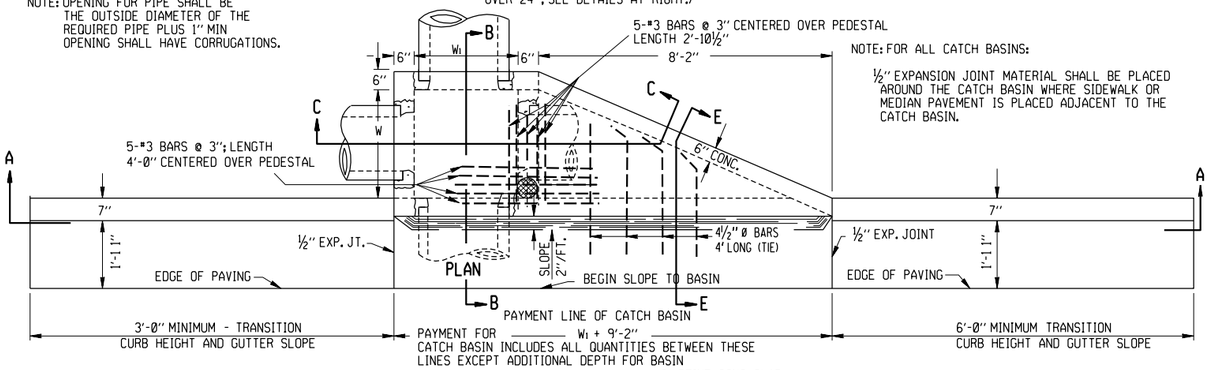

NOTE: FOR ALL CATCH BASINS:

½" EXPANSION JOINT MATERIAL SHALL BE PLACED AROUND THE CATCH BASIN WHERE SIDEWALK OR MEDIAN PAVEMENT IS PLACED ADJACENT TO THE CATCH BASIN.

CATCH BASIN (TYPICAL FOR CATCH BASIN WITH LONGITUDINAL PIPE OVER 24".)

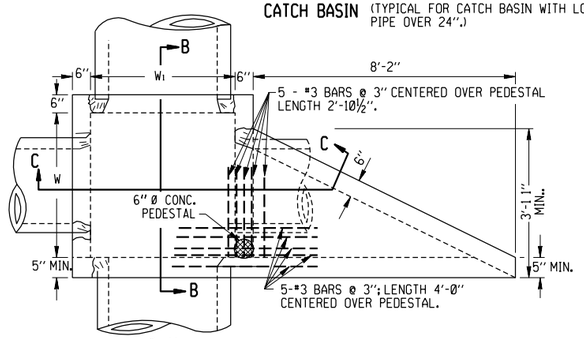

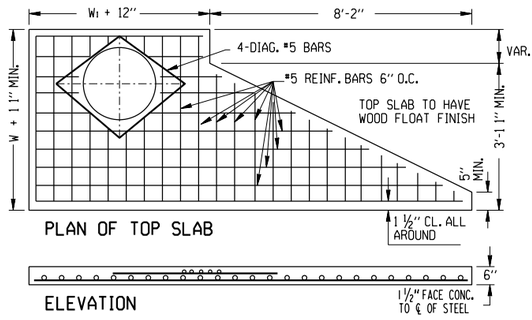

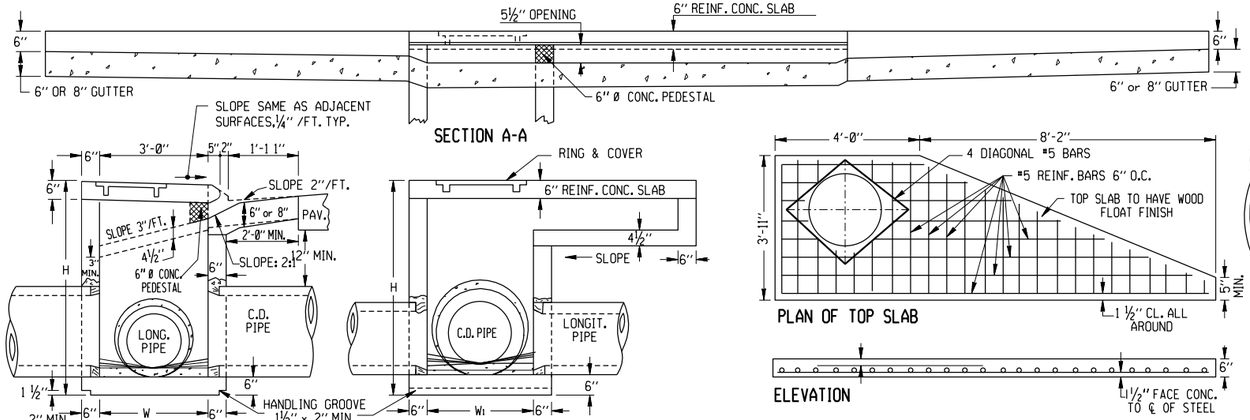

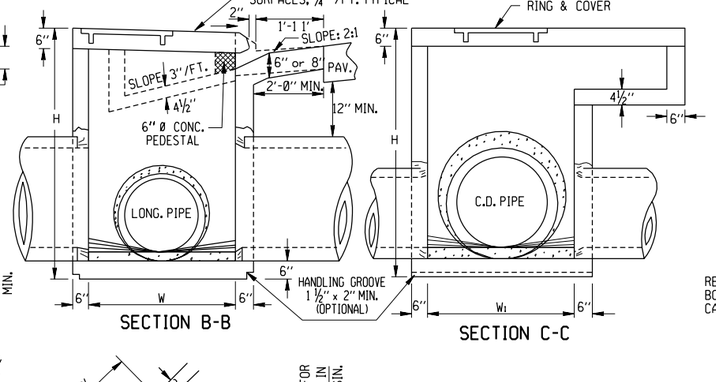

REINFORCING - ISOMETRIC VIEW

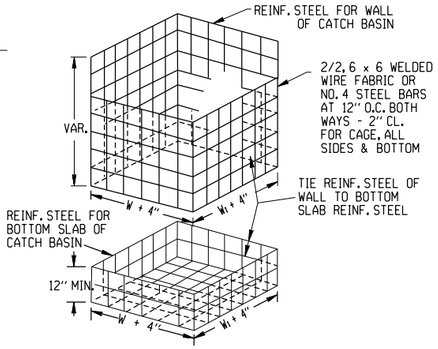

NOTE:
REINFORCING SHOWN ABOVE IS REQUIRED FOR BOX SHAPED BASIN. REINFORCING FOR CIRCULAR PRECAST ALTERNATE SHALL BE ACCORDING TO STD. 1040.

ALL JOINTS BETWEEN PRECAST RISERS OR BETWEEN PRECAST BASE AND RISER WILL BE KEYED. KEYED JOINTS SHOWN ARE TYPICAL AND MAY BE VARIED.

DIMENSIONS FOR CATCH BASINS		
PIPE SIZE	NORMAL W OR W₁	MIN H
12"	3'-0"	4'-4"
15"	3'-0"	4'-7"
18"	3'-0"	4'-10"
24"	3'-0"	5'-6"
30"	3'-6"	6'-2"
36"	4'-0"	6'-10"
42"	5'-0"	7'-4"
48"	5'-0"	8'-0"
54"	6'-0"	8'-6"
60"	6'-0"	9'-2"

NOTE:
DIMENSIONS FOR CATCH BASINS ARE BASED UPON TYPICAL OUTSIDE DIAMETERS OF CONCRETE PIPES AND MAY BE VARIED IF CONDITIONS PERMIT AND THE ENGINEER APPROVES. W & W₁ DIMENSIONS DO NOT HAVE TO BE EQUAL.

ALTERNATE:
BUILT-IN-PLACE, PRECAST BOX, AND/OR PRECAST CIRCULAR UNITS WITH THE REQUIRED ADAPTERS, REDUCERS, FITTINGS, CONNECTIONS, ETC. MAY BE USED IN COMBINATIONS.

NOTE:
FOR RING & COVER DETAILS AND OTHER DETAILS NOT SHOWN, SEE STANDARD 1033G FOR BUILT-IN-PLACE CATCH BASIN.

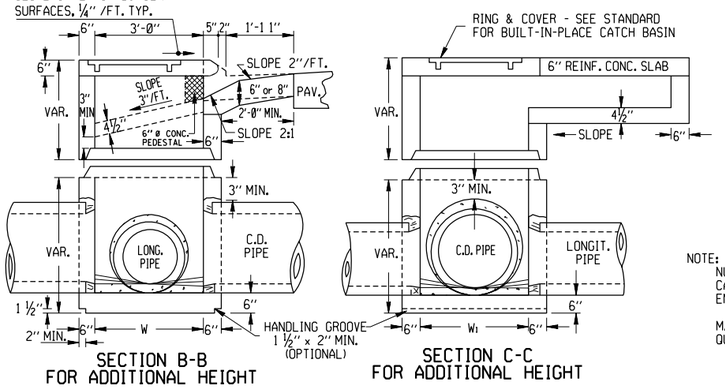

DETAIL AND ARRANGEMENT OF LADDER BARS

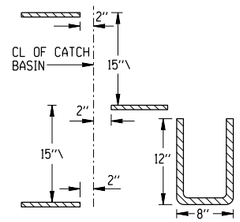

NOTE:
NUMBER AND LOCATION OF LADDER BARS IN CATCH BASIN TO BE AS DIRECTED BY THE ENGINEER.

M.H. STEPS LISTED IN GA. D.O.T. LABORATORY'S QUALIFIED PRODUCTS LIST MAY BE SUBSTITUTED.

METHOD OF CONNECTING PIPE
(WHERE CONCRETE PIPE HAS TO BE CUT)

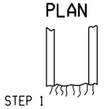

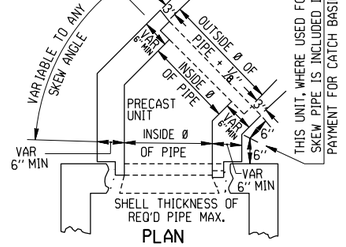

A METHOD OF CONNECTING SKEWED PIPE

IF THIS SWIVEL SECTION SLAB IS USED TO REDUCE THE W AND W₁ DIMENSIONS, INCREASE THE MIN. THICKNESS TO 9" AND USE REINF. STEEL. SEE DETAIL BELOW.

DETAIL FOR REINFORCED STEEL

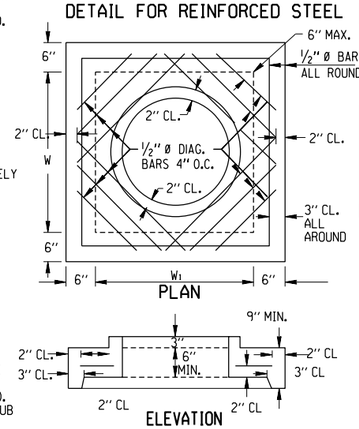

TYPICAL ISOMETRIC VIEW

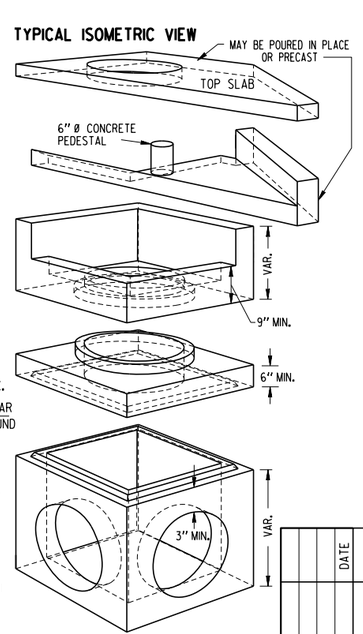

SWIVEL SECTION MAY BE USED WHERE SKEWED PIPE CONNECTS TO PRECAST CONCRETE BOX.

THE ABOVE VIEW DEPICTS PRECAST BOX. SEE SEPARATE STANDARDS FOR CIRCULAR ALTERNATE OR BUILT-IN-PLACE BOX.

DETAIL OF TOP SLAB; REINF. STEEL & CLEARANCES REQUIRED

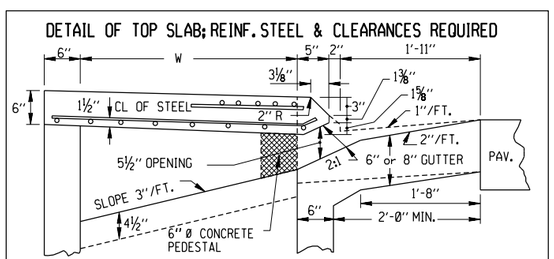

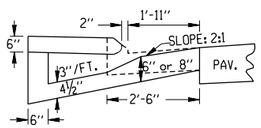

SECTION E-E

	DATE	DEPARTMENT OF TRANSPORTATION STATE OF GEORGIA
BY	REVISION	STANDARD PRECAST CATCH BASINS FOR USE WITH CURB (6" Mountable) & GUTTER
		NOT TO SCALE — REDRAWN JULY 2024 — DEC. 1985
DES. R.M.U. DRW. R.M.U. TRA. G.M.E. CHK. R.K.C.		(SUBMITTED) Floyd E. Hardy, STATE ROAD & AIRPORT DESIGN ENGR (APPROVED) Hal Reinaer, STATE HIGHWAY ENGINEER
		NUMBER 1033G PRECAST

STATE	PROJECT NUMBER	SHEET NO.	TOTAL SHEETS
GA.			

CATCH BASIN

(FOR CATCH BASIN WITH LONGIT. PIPE OVER 24", SEE DETAILS AT RIGHT.)

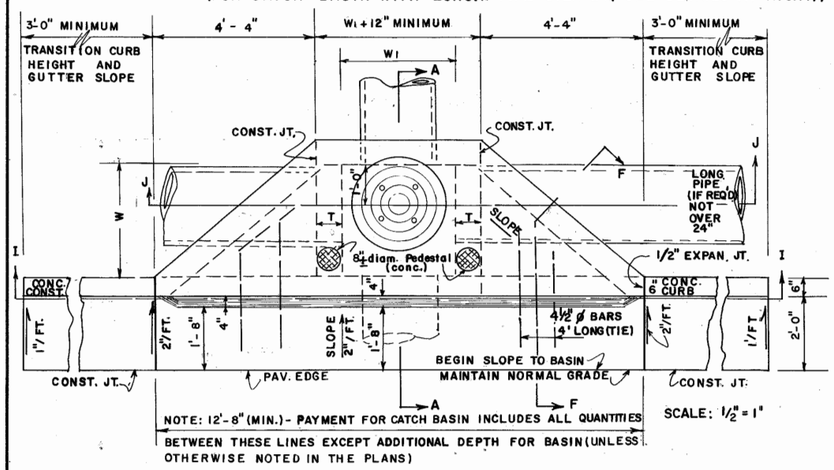

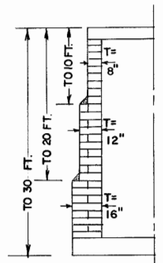

DEPTH LIMITS FOR INCREASING "T"

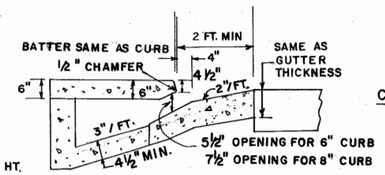

SECTION F-F

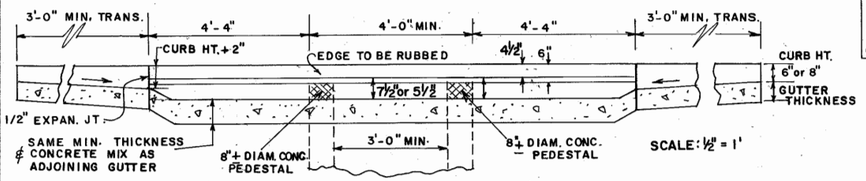

SECTION I-I

NOTE: NORMAL SLOPE OF CONCRETE APRON TO BE INCREASED UP TO 8" TOTAL WHERE "H" PERMITS AND LONGITUDINAL PIPE IS LOWERED FOR OTHER REASONS.

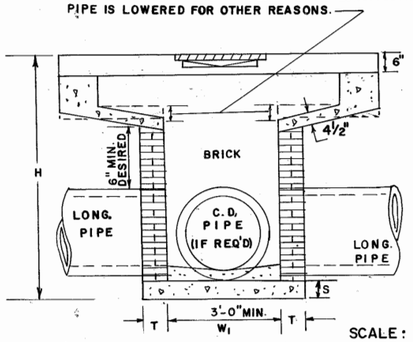

SECTION J-J

SCALE: 1/2" = 1'

NOTE: PIPE SIZES, NUMBER, ALIGNMENT AND INVERTS SHOWN ARE ILLUSTRATIVE. SEE PLANS FOR SPECIFICS. INVERTS TO BE FORMED WITH GROUT OR CONC. AS SHOWN IN THE PLANS OR AS DIRECTED BY THE ENGINEER.

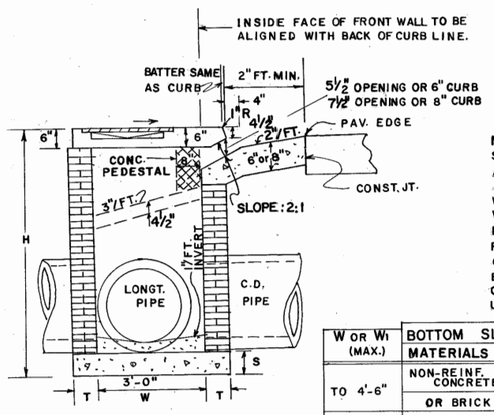

SECTION A-A

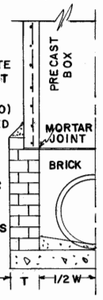

NOTE: SEE SEPARATE STDS. FOR PRECAST ALTERNATES, ADAPTERS (STD. 1040) WILL BE REQUIRED WITH CIRCULAR PRECAST UNITS. PRECAST BOX, CIRCULAR, AND/OR BUILT-IN-PLACE CONSTR. MAY BE USED IN COMBINATIONS

PRECAST BOX ON BRICK (HALF-SECTION)

W or W1 (MAX.)	BOTTOM SLAB MATERIALS	"S"
TO 4'-6"	NON-REINF. CONCRETE	6"
	OR BRICK	8"
OVER 4'-6"	CONC. REINF. W1 4 BARS 12" O.C. BOTH WAYS 2" CL. FROM SLAB TOP	8"

DETAIL OF TOP REINFORCED CONCRETE SLAB

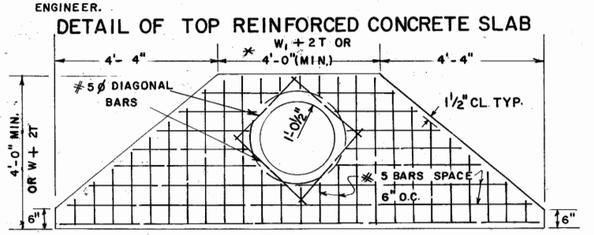

PLAN

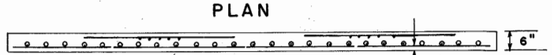

ELEVATION

NOTE: ALL BARS IN PLAN VIEW ARE SPACED AT 6" O.C.

NOTE: FOR PLAN DETAIL OF REINFORCING STEEL IN TOP PORTION OF SLAB SEE PART PLAN AT TOP RIGHT.

NOTE: TOP SLAB MAY BE CAST IN PLACE OR PRECAST. IF CAST IN PLACE, BUILDER'S PAPER IS TO BE PLACED BETWEEN THE CATCH BASIN AND TOP SLAB.

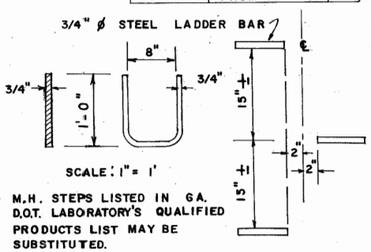

SCALE: 1" = 1'

NOTE: M.H. STEPS LISTED IN GA. D.O.T. LABORATORY'S QUALIFIED PRODUCTS LIST MAY BE SUBSTITUTED.

ALL CATCH BASINS WILL HAVE STEPS OR LADDER BARS. NUMBER & LOCATION TO BE AS DIRECTED BY THE ENGINEER.

DETAIL OF LADDER BARS

DETAIL OF TOP STAB REINF. STEEL & CLEARANCES REQ'D.

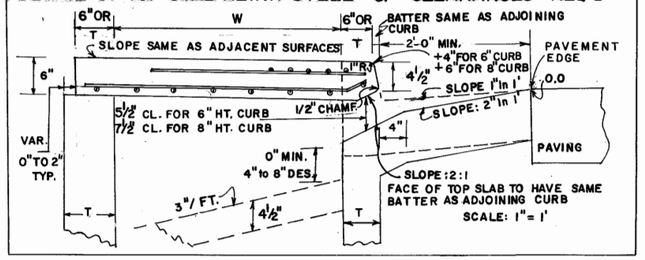

CASTING DETAILS

3° TO 7° DRAFTS TYP.

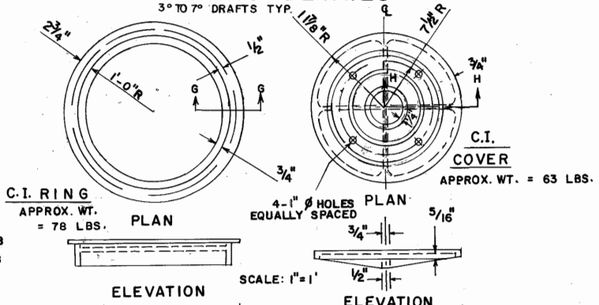

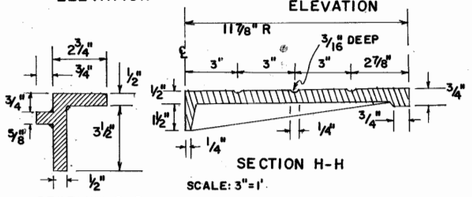

CATCH BASIN ON RADII

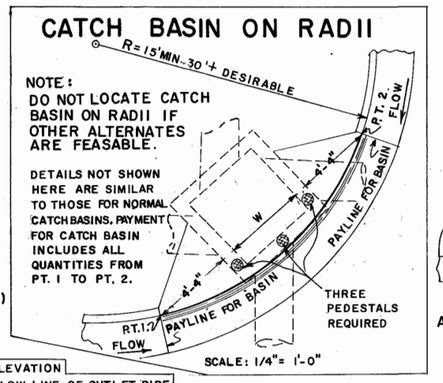

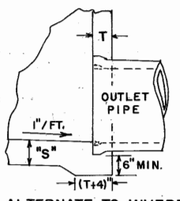

ALTERNATE TO INVERT

PIPE DIA.	H (MIN.)	W or W1	MIN. ΔE
12	4'-4"	3'-0"	3'-3"
15	4'-7"	3'-0"	3'-6"
18	4'-10"	3'-0"	3'-9"
24	5'-6"	3'-0"	4'-4"
30	6'-2"	3'-7"	5'-0"
36	6'-10"	4'-6"	5'-7"
42	7'-4"	5'-3"	5'-11"
48	8'-0"	6'-0"	6'-6"
54	8'-6"	6'-8"	7'-0"
60	9'-2"	7'-4"	7'-7"

ΔE = MINIMUM DIFFERENCE IN ELEVATION FROM PAVEMENT EDGE TO FLOW LINE OF OUTLET PIPE.

NOTE: THE MIN. H & MIN. ΔE GIVEN IN ABOVE TABLE ARE BASED UPON TYPICAL OUTSIDE DIAMETERS OF CONC. PIPE AND MAY BE VARIED, IF CONDITIONS PERMIT WITH VARIED DIMENSIONS SPECIFIED IN THE PLANS OR DIRECTED BY THE ENGINEER. W & W1 DIMENSIONS DO NOT HAVE TO BE EQUAL.

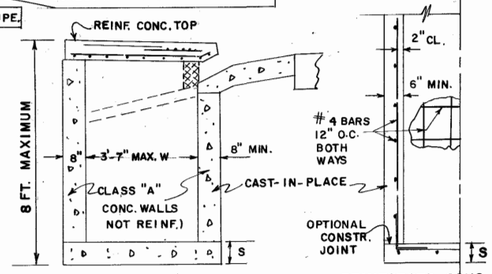

NON REINFORCED SMALL BASIN (W1 NOT OVER 3'-7")

REINFORCED CONC. HALF-SECTION

NOTE: DETAILS NOT SHOWN ABOVE FOR CONSTRUCTION ALTERNATES WILL BE SIMILAR TO BRICK CATCH BASIN DETAILS.

CONSTRUCTION ALTERNATES

CATCH BASIN (WITH PROTUDED BACK)

FOR USE WITH LONGITUDINAL PIPE OVER 24" OR FOR USE WITH RECESSED BOX

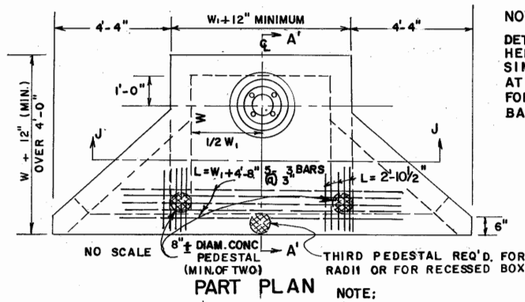

NOTE:
DETAILS NOT SHOWN HERE WILL BE SIMILAR TO THOSE AT FAR LEFT FOR NORMAL CATCH BASINS.

PART PLAN

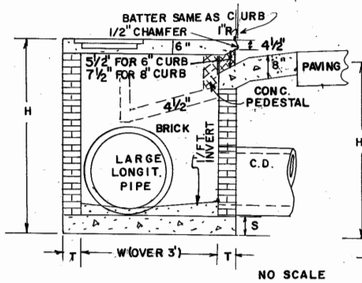

NOTE;
RECESSED BOX TO BE USED ONLY WHERE SPECIFIED, H2 & W2 TO BE SHOWN IN PLANS

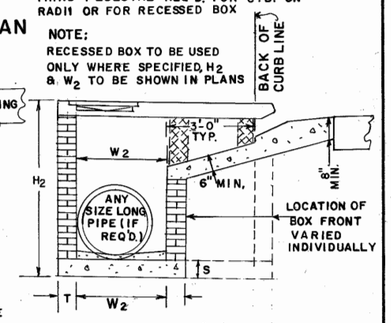

NO SCALE

SECTION A'-A' (FOR LONGIT. PIPE OVER 24")

SECTION A'-A' (FOR RECESSED BOX)

DETAIL OF TOP REINFORCED CONCRETE SLAB

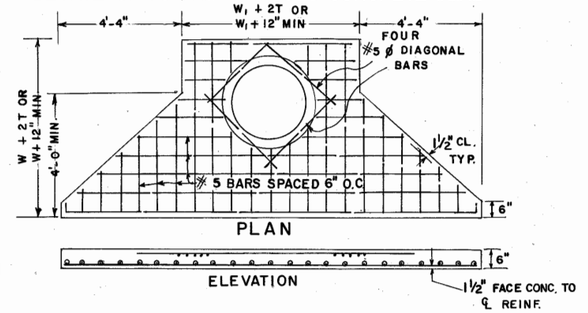

PLAN

ELEVATION

1½" FACE CONC. TO ℄ REINF.

NOTE:
TYPICAL TREATMENT FOR SKEWED PIPES ARE: CIRCULAR PRECAST UNITS; PRECAST SWIVEL SECTIONS; PIPE ELBOWS OR INCREASED BOX SIZES TO ACCOMODATE THE SKEWS.

SEE SEPARATE STANDARDS FOR PRECAST ALTERNATES.

DEPARTMENT OF TRANSPORTATION

STATE OF GEORGIA

STANDARD

CATCH BASINS

FOR USE WITH CURB (6" OR 8" HT.) & GUTTER (IN SAGS OR LOW POINTS)

SCALE AS SHOWN

REV. & RED. AUGUST, 1982

REV. & REDR. R.M.U.	(SUBMITTED) Floyd E. Hardy STATE ROAD & AIRPORT DESIGN ENGR.	NUMBER
TRA G.M.E. CHK. R.K.C.	(APPROVED) Thomas D. Moseley STATE HIGHWAY ENGINEER	1034D

STATE	PROJECT NUMBER	SHEET NO.	TOTAL SHEETS
GA.			

CATCH BASIN (IF CATCH BASIN HAS LONGITUDINAL PIPE OVER 24", SEE DETAILS AT RIGHT)

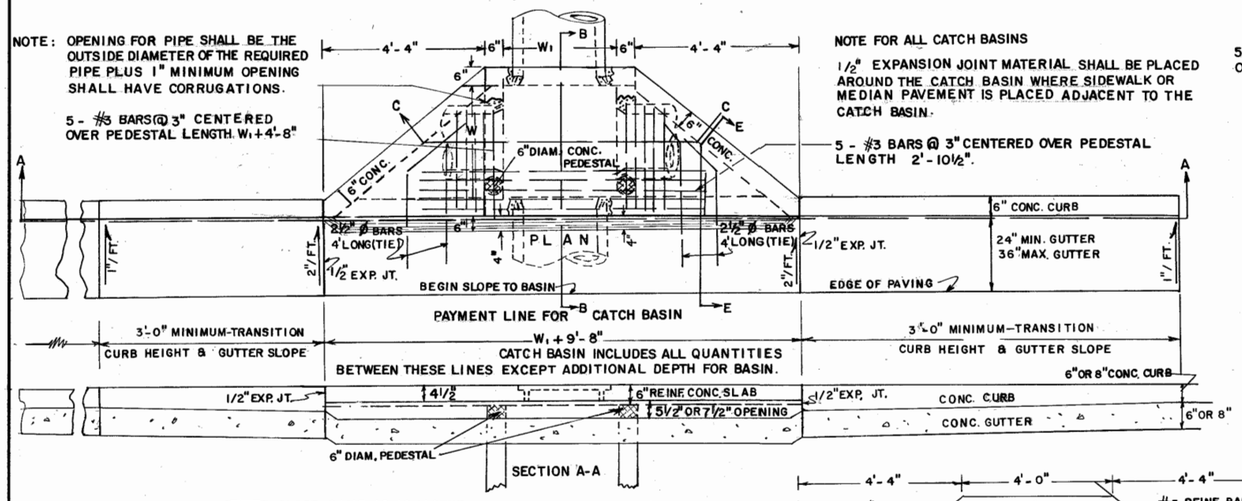

NOTE FOR ALL CATCH BASINS

1½" EXPANSION JOINT MATERIAL SHALL BE PLACED AROUND THE CATCH BASIN WHERE SIDEWALK OR MEDIAN PAVEMENT IS PLACED ADJACENT TO THE CATCH BASIN.

5 - #3 BARS @ 3" CENTERED OVER PEDESTAL LENGTH 2'-10½".

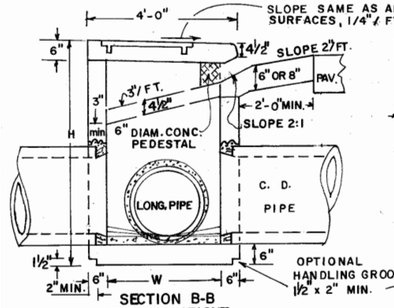

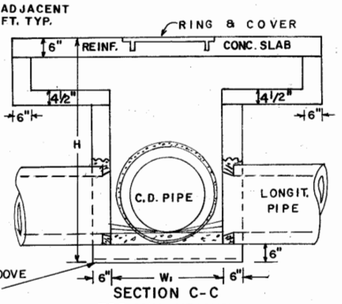

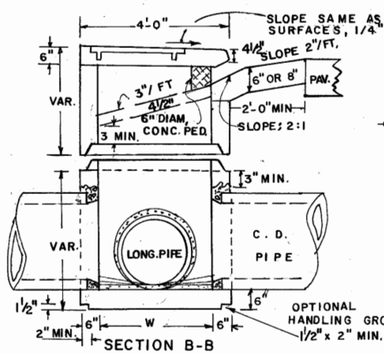

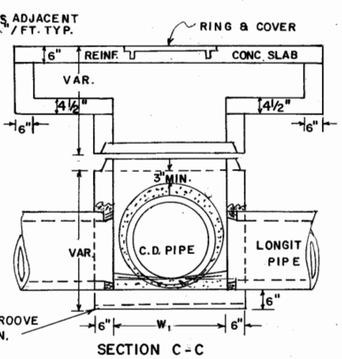

CATCH BASIN (TYPICAL FOR CATCH BASIN WITH LONGITUDINAL PIPE OVER 24".)

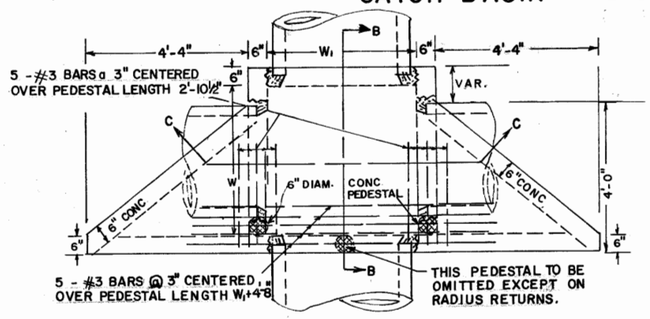

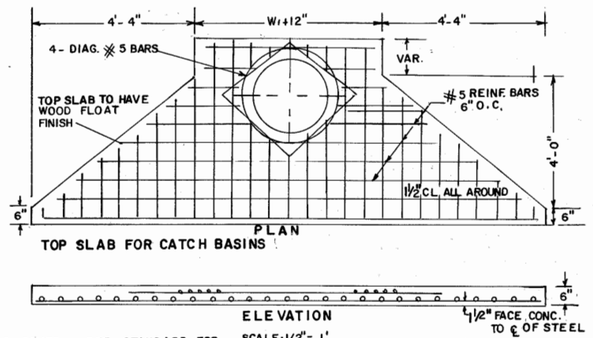

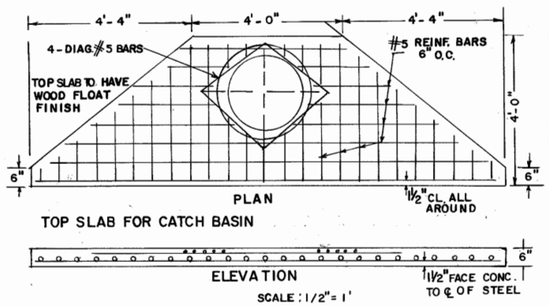

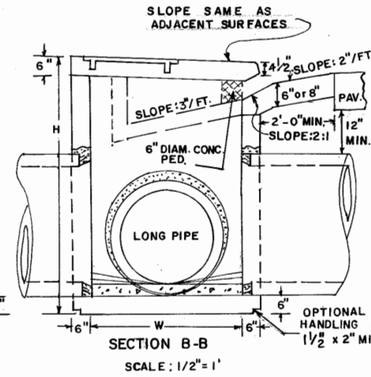

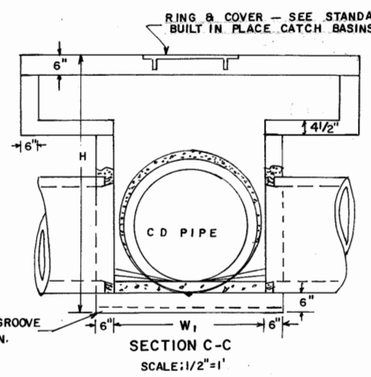

REINFORCING - ISOMETRIC VIEW

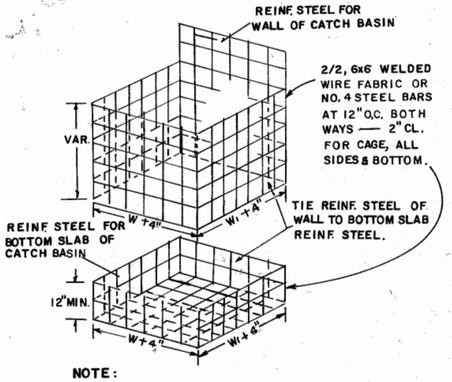

NOTE:
REINFORCING SHOWN ABOVE IS REQUIRED FOR BOX SHAPED BASIN. REINFORCING FOR CIRCULAR PRECAST ALTERNATE SHALL BE ACCORDING TO STD. 1040.

ALL JOINTS BETWEEN PRECAST RISERS OR BETWEEN PRECAST BASE AND RISER WILL BE KEYED. KEYED JOINTS SHOWN ARE TYPICAL AND MAY BE VARIED,

THIS UNIT WHERE REQ'D. FOR SKEWED PIPE IS INCLUDED IN PRICE BID FOR CATCH BASIN.

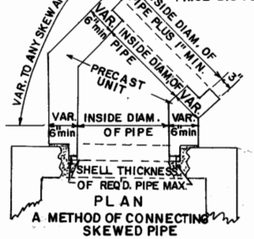

TYPICAL ISOMETRIC VIEW

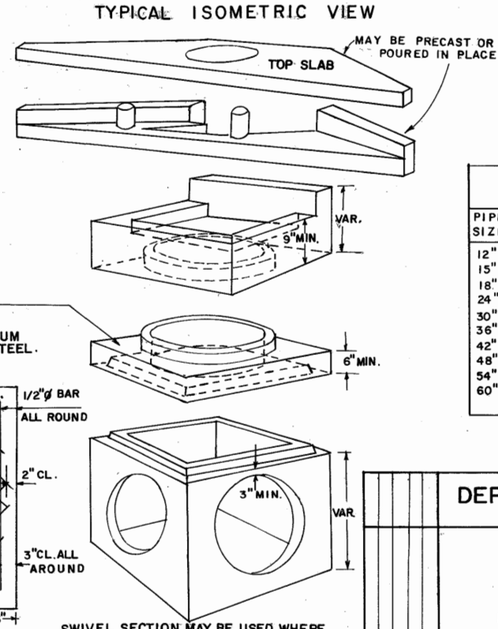

DIMENSIONS FOR CATCH BASINS		
PIPE SIZE	NORMAL W or W1	MIN. H
12"	3'-0"	4'-4"
15"	3'-0"	4'-7"
18"	3'-0"	4'-10"
24"	3'-0"	5'-6"
30"	3'-6"	6'-2"
36"	4'-0"	6'-10"
42"	5'-0"	7'-4"
48"	5'-0"	8'-0"
54"	6'-0"	8'-6"
60"	6'-0"	9'-2"

NOTE:
DIMENSIONS FOR CATCH BASINS ARE BASED UPON TYPICAL OUTSIDE DIAMETERS OF CONCRETE PIPES AND MAY BE VARIED IF CONDITIONS PERMIT AND THE ENGINEER APPROVES. W & W1 DIMENSIONS DO NOT HAVE TO BE EQUAL.

ALTERNATE:
BUILT-IN-PLACE, PRECAST BOX, AND/OR PRECAST CIRCULAR UNITS WITH THE REQUIRED ADAPTERS, REDUCERS, FITTINGS, CONNECTIONS, ETC. MAY BE USED IN COMBINATIONS.

NOTE:
FOR RING & COVER DETAILS AND OTHER DETAILS NOT SHOWN, SEE STANDARD 1034 D FOR BUILT-IN-PLACE CATCH BASIN.

DETAIL OF TOP SLAB, REINF. STEEL & CLEARANCES REQ'D.

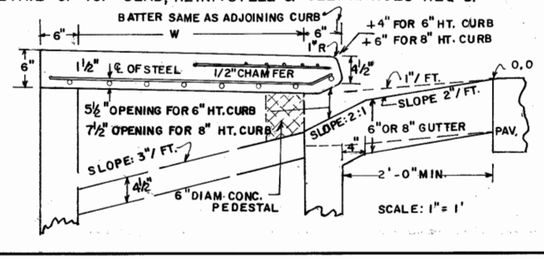

DETAIL AND ARRANGEMENT OF LADDER BARS

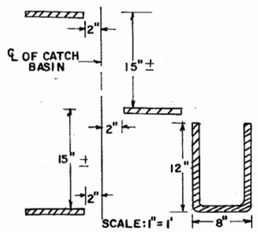

NOTE:
NUMBER AND LOCATION OF LADDER BARS IN CATCH BASIN TO BE AS DIRECTED BY THE ENGINEER.
M.H. STEPS LISTED IN GA. D.O.T. LABORATORY'S QUALIFIED PRODUCTS LIST MAY BE SUBSTITUTED.

METHOD OF CONNECTING PIPE (WHERE CONC. PIPE HAS TO BE CUT)

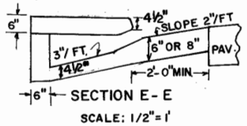

STEP 1:
CUT CONCRETE PIPE LEAVING APPROXIMATELY 3" OF REINFORCING MESH EXPOSED

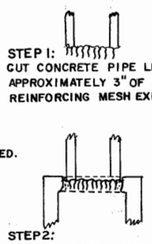

STEP 2:
POSITION PIPE APPROXIMATELY 3" INTO OPENING OF WALL.

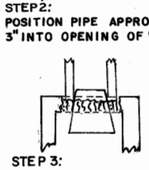

STEP 3:
POSITION CONICAL CONE INSIDE OF PIPE AND SEAL WITH GROUT. (1/2" MIN. THICKNESS OF GROUT). REMOVE CORE WHEN SET AND RUB GROUT TO SEAL JOINTS.

NO SCALE

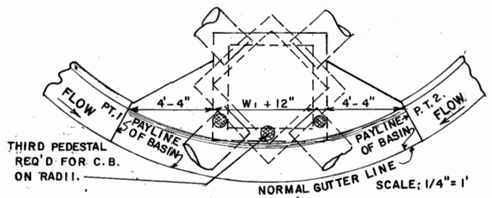

SWIVEL SECTION MAY BE USED WHERE SKEWED PIPE CONNECTS TO PRECAST CONCRETE BOX.
ALL DIMENSIONS ARE THE SAME AS SHOWN ON DETAILS FOR CATCH BASIN, DIMENSIONS FROM PT. 1 TO PT. 2 ARE MEASURED ALONG THE CHORD, UNIT PRICE BID FOR CATCH BASIN INCLUDES ALL CURB AND GUTTER FROM PT. 1 TO PT. 2.

IF THIS SWIVEL SECTION SLAB IS USED TO REDUCE THE W AND W1 DIMENSIONS, INCREASE THE MINIMUM THICKNESS TO 9" AND USE REINF. STEEL. SEE DETAIL BELOW.

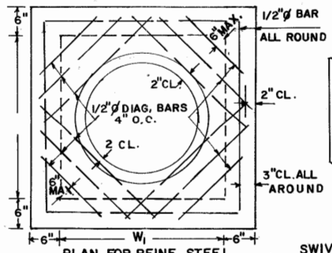

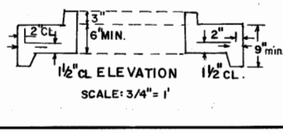

NOTE:
THE ABOVE VIEW DEPICTS PRECAST BOX SEE SEPARATE STANDARDS FOR CIRCULAR ALTERNATE OR BUILT-IN-PLACE BOX.

SWIVEL SECTION MAY BE USED WHERE SKEWED PIPE CONNECTS TO PRECAST CONCRETE BOX.

NO SCALE

DEPARTMENT OF TRANSPORTATION
STATE OF GEORGIA

STANDARD PRECAST CATCH BASINS

FOR USE WITH CURB (6" OR 8" HT.) & GUTTER
(IN SAGS OR LOW POINTS)

SCALE AS SHOWN — REV. & REDR., SEPT. 1982

REV. & REDR. R.M.U.	(SUBMITTED) Floyd E. Hardy — STATE ROAD & AIRPORT DESIGN ENGR.	NUMBER 1034D PRECAST
TRA. G.M.E. CHK. R.K.C.	(APPROVED) Thomas D. Moreland — STATE HIGHWAY ENGINEER	

STATE	PROJECT NUMBER	SHEET NO.	TOTAL SHEETS
GA.			

CATCH BASIN

(IF CATCH BASIN HAS LONGITUDINAL PIPE OVER 24", SEE DETAILS AT RIGHT)

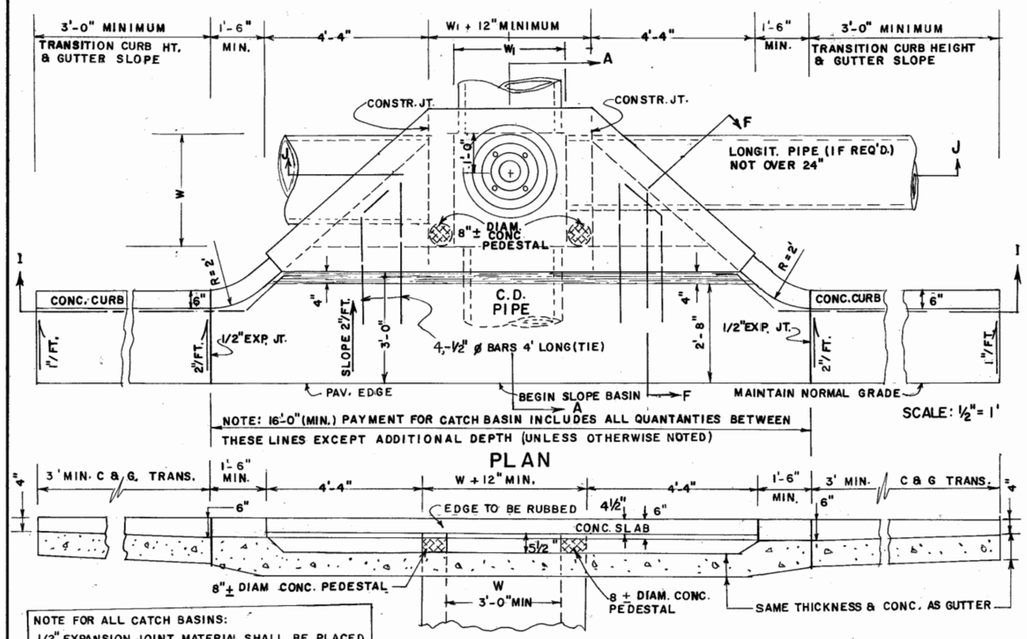

NOTE: 16'-0" (MIN.) PAYMENT FOR CATCH BASIN INCLUDES ALL QUANTANTIES BETWEEN THESE LINES EXCEPT ADDITIONAL DEPTH (UNLESS OTHERWISE NOTED)

PLAN

NOTE FOR ALL CATCH BASINS:
1/2" EXPANSION JOINT MATERIAL SHALL BE PLACED AROUND THE CATCH BASIN WHERE SIDEWALK OR MEDIAN PAVEMENT IS PLACED ADJACENT TO THE CATCH BASIN.

SECTION I-I

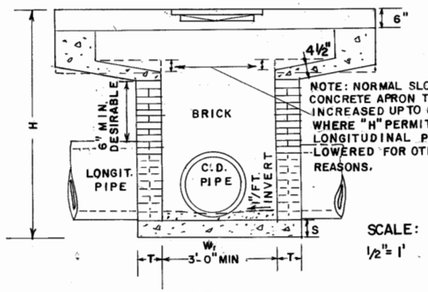

NOTE: NORMAL SLOPE OF CONCRETE APRON TO BE INCREASED UP TO 6" TOTAL WHERE "H" PERMITS AND LONGITUDINAL PIPE IS LOWERED FOR OTHER REASONS.

SECTION J-J

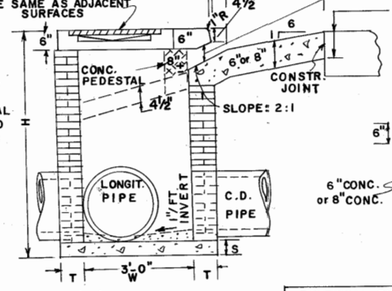

SECTION A-A

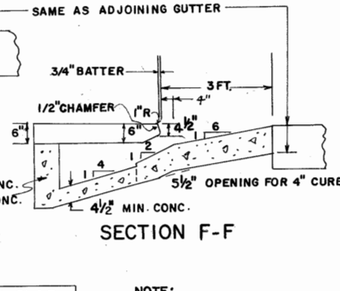

SECTION F-F

W OR W1 (MAX.)	BOTTOM SLAB MATERIALS	"S"
TO 4'-6"	NON-REINF. CONCRETE	6"
	OR BRICK	8"
OVER 4'-6"	CONC. REINF. W1 #4 BARS 12" O.C. BOTH WAYS, 2" CL FROM SLAB TOP	8"

NOTE:
PIPE SIZES, NUMBER, ALIGNMENT, AND INVERTS SHOWN ARE ILLUSTRATIVE. SEE PLANS FOR SPECIFIES. INVERTS TO BE FORMED WITH GROUT OR CONC. AS DIRECTED BY THE ENGINEER.

DETAIL OF TOP REINFORCED CONCRETE SLAB

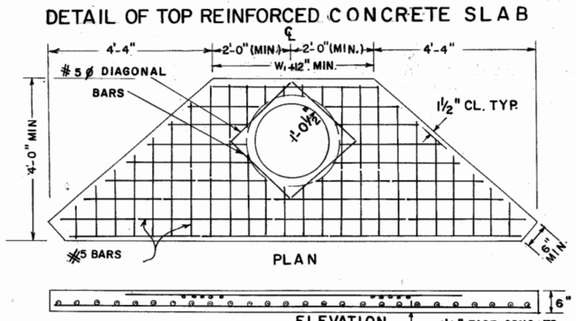

NOTE: ALL BARS IN PLAN VIEW ARE SPACED AT 6" O.C.

FOR PLAN DETAIL OF REINFORCING STEEL IN TOP PORTION OF SLAB, SEE PART PLAN AT TOP RIGHT.

DETAIL OF TOP SLAB, REINF. STEEL & CLEARANCES REQ'D.

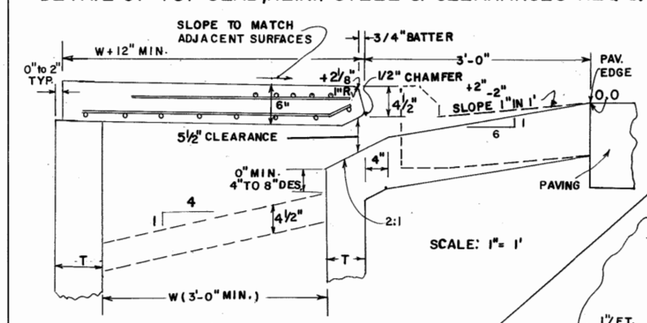

CASTING DETAILS

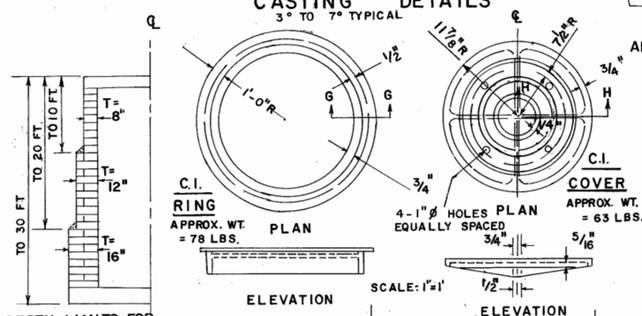

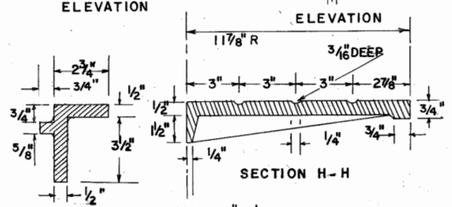

ALTERNATE TO INVERT

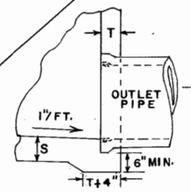

CATCH BASIN (WITH PROTRUDED BACK)

(TYPICAL FOR CATCH BASINS WITH LARGE LONGITUDINAL PIPES OR RECESSED BOX)

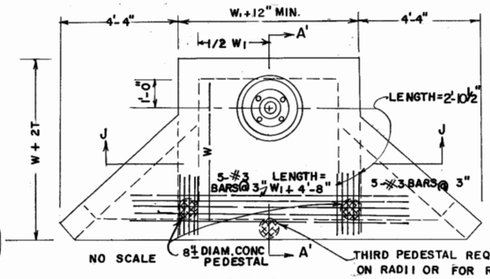

NOTE;
CATCH BASIN DETAILS NOT SHOWN HERE WILL BE SIMILAR TO THOSE AT FAR LEFT FOR NORMAL CATCH BASINS.

PART PLAN

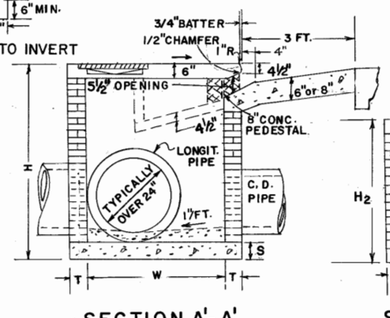

SECTION A'-A'

(FOR LARGE LONGIT. PIPE) NO SCALE

NOTE;
RECESSED BOX TO BE USED ONLY WHERE SPECIFIED IN THE PLANS. SHALLOW LONGITUDINAL PIPE OR UNDERGROUND OBSTRUCTION TYPICAL, H_2 & W_2 TO BE SHOWN IN THE PLANS.

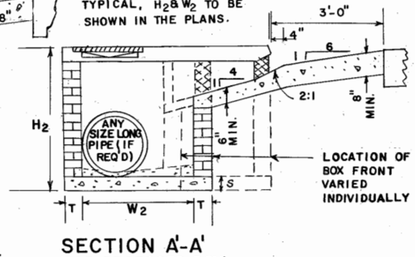

SECTION A'-A'

(FOR RECESSED BOX)

CATCH BASIN ON RADII

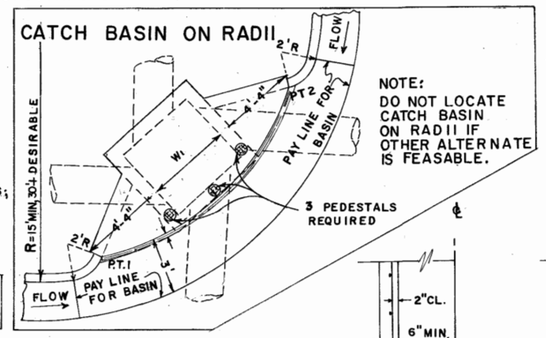

NOTE:
DO NOT LOCATE CATCH BASIN ON RADII IF OTHER ALTERNATE IS FEASABLE.

DETAIL OF TOP REINFORCED CONCRETE SLAB

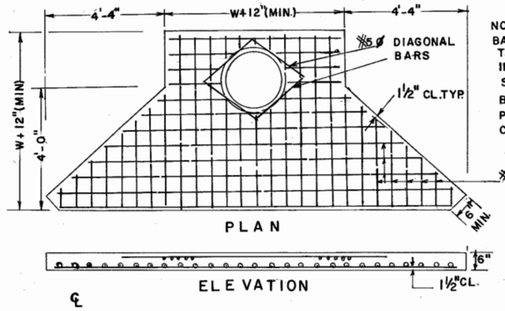

NOTE FOR ALL CATCH BASINS:
TOP SLAB MAY BE CAST-IN-PLACE OR PRECAST. IF SLAB IS CAST-IN-PLACE, BUILDER'S PAPER IS TO BE PLACED BETWEEN THE CATCH BASIN AND TOP SLAB.

NOTE:
TYPICAL TREATMENT FOR SKEWED PIPES ARE: CIRCULAR PRECAST UNITS; PRECAST SWIVEL SECTIONS; PIPE ELBOWS; OR INCREASED BOX SIZES TO ACCOMODATE THE SKEWS.

Δ E = MINIMUM DIFFERENCE IN ELEVATION FROM PAVEMENT EDGE TO FLOW LINE OF OUTLET PIPE.

TYPICAL MIN. DIMENSIONS			
PIPE DIA.	H (MIN.)	W OR W1	Δ E
12	4'-4"	3'-0"	3'-5"
15	4'-7"	3'-0"	3'-8"
18	4'-10"	3'-0"	3'-11"
24	5'-6"	3'-0"	4'-6"
30	6'-2"	3'-7"	5'-2"
36	6'-10"	4'-6"	5'-9"
42	7'-4"	5'-3"	6'-1"
48	8'-0"	6'-0"	6'-8"
54	8'-6"	6'-8"	7'-2"
60	9'-2"	7'-4"	7'-9"

NOTE: W & W. DIMENSIONS DO NOT HAVE TO BE EQUAL. THE MIN. H & ΔE GIVEN IN ABOVE TABLE ARE BASED UPON TYPICAL OUTSIDE DIAMETERS OF CONC. PIPE AND MAY BE VARIED IF CONDITIONS PERMIT WITH THE VARIED DIMENSION SPECIFIED IN THE PLANS OR DIRECTED BY THE ENGINEER.

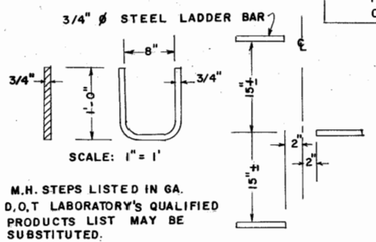

M.H. STEPS LISTED IN GA. D.O.T LABORATORY'S QUALIFIED PRODUCTS LIST MAY BE SUBSTITUTED.

ARRANGEMENT OF LADDER BARS.

ALL CATCH BASINS WILL HAVE STEPS OR LADDER BARS. NUMBER & LOCATION TO BE AS DIRECTED BY THE ENGINEER.

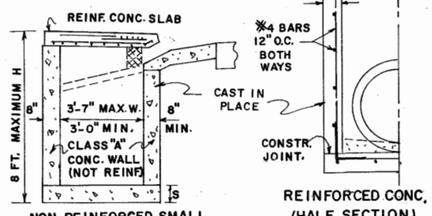

NON REINFORCED SMALL BASIN (W NOT OVER 3'-7")

REINFORCED CONC. (HALF SECTION)

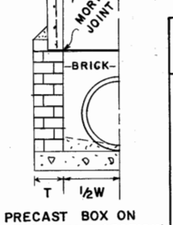

PRECAST BOX ON BRICK (HALF SECTION)

NOTE:
SEE SEPARATE STANDARDS FOR PRECAST DETAILS. ADAPTERS (STD. 1040) WILL BE REQUIRED WITH CIRCULAR ALTERNATES. PRECAST BOX, PRECAST CIRCULAR AND OR BUILT-IN-PLACE CONSTRUCTION MAY BE USED IN COMBINATIONS.

CONSTRUCTION ALTERNATES

NOTE: DETAILS NOT SHOWN FOR CONSTRUCTION ALTERNATES WILL BE SIMILAR TO DETAILS FOR BRICK CATCH BASINS.

SEE SEPARATE STANDARDS FOR PRECAST ALTERNATES.

DEPARTMENT OF TRANSPORTATION

STATE OF GEORGIA

STANDARD

CATCH BASINS

FOR USE WITH CURB (4" HT.) & GUTTER IN SAGS OR LOW POINTS

SCALE AS SHOWN

REV. & REDR. AUGUST, 1982

REV. & REDR. RMU
TRA. GME
CHK. RKC

(SUBMITTED) Lloyd E. Hardy
STATE ROAD & AIRPORT DESIGN ENGR.

(APPROVED) Thomas D. Mitchell
STATE HIGHWAY ENGINEER

NUMBER 1034E

STATE	PROJECT NUMBER	SHEET NO.	TOTAL SHEETS
GA			

CATCH BASIN (IF CATCH BASIN HAS LONGITUDINAL PIPE OVER 24", SEE DETAILS AT RIGHT.)

NOTE: OPENING FOR PIPE SHALL BE THE OUTSIDE DIAMETER OF THE REQUIRED PIPE PLUS 1" MINIMUM OPENING SHALL HAVE CORRUGATIONS

5 - #3 BARS @ 3" CENTERED OVER PEDESTAL; LENGTH W_1+4'-8"

NOTE FOR ALL CATCH BASINS:

1/2" EXPANSION JOINT MATERIAL SHALL BE PLACED AROUND THE CATCH BASIN WHERE SIDEWALK OR MEDIAN PAVEMENT IS PLACED ADJACENT TO THE CATCH BASIN.

5 - #3 BARS @ 3" CENTERED OVER PEDESTAL; LENGTH 2'-10½"

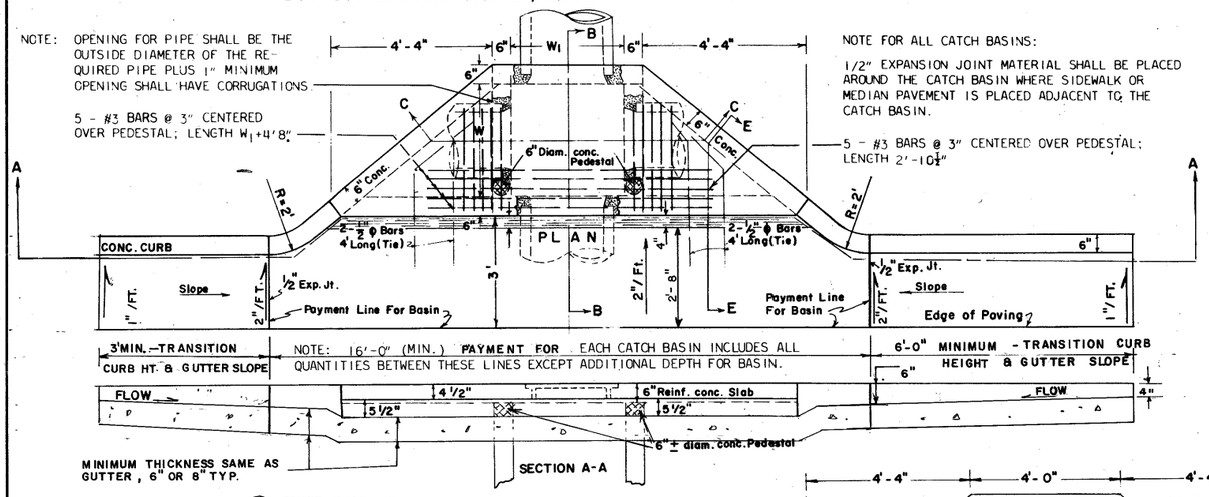

3'MIN. -TRANSITION CURB HT. & GUTTER SLOPE

NOTE: 16'-0" (MIN.) PAYMENT FOR EACH CATCH BASIN INCLUDES ALL QUANTITIES BETWEEN THESE LINES EXCEPT ADDITIONAL DEPTH FOR BASIN.

6'-0" MINIMUM - TRANSITION CURB HEIGHT & GUTTER SLOPE

MINIMUM THICKNESS SAME AS GUTTER, 6" OR 8" TYP.

SECTION A-A

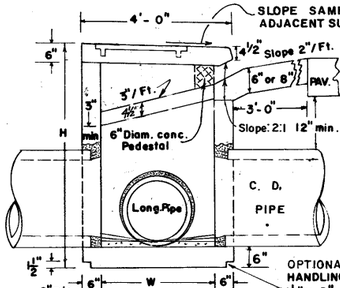

SECTION B-B FOR MIN. HEIGHT

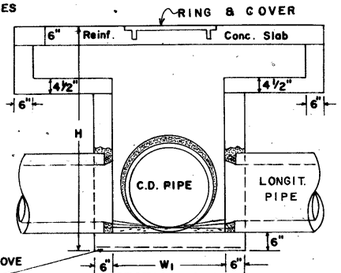

OPTIONAL HANDLING GROOVE 1½" X 2" min.

SECTION C-C FOR MIN. HEIGHT

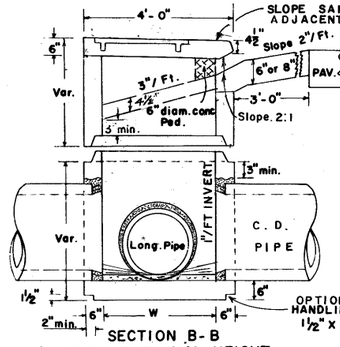

OPTIONAL HANDLING GROOVE 1½" X 2" Min.

SECTION B-B FOR ADDITIONAL HEIGHT

SCALE: ½" = 1'

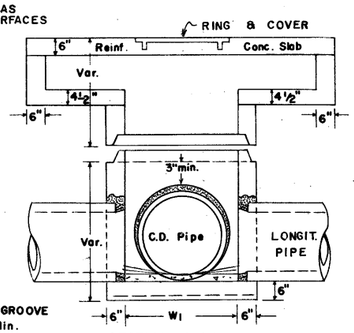

SECTION C-C FOR ADDITIONAL HEIGHT

SCALE: ½" = 1'

CATCH BASIN (TYPICAL FOR CATCH BASIN WITH LONGITUDINAL PIPE OVER 24")

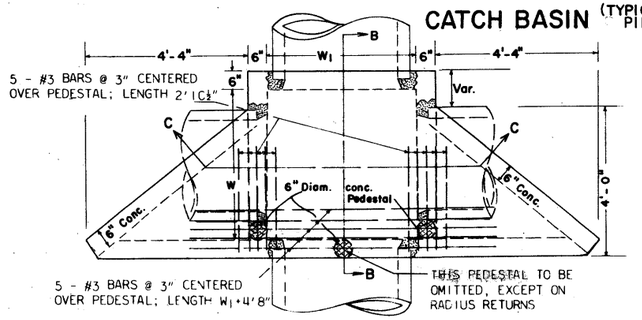

PLAN

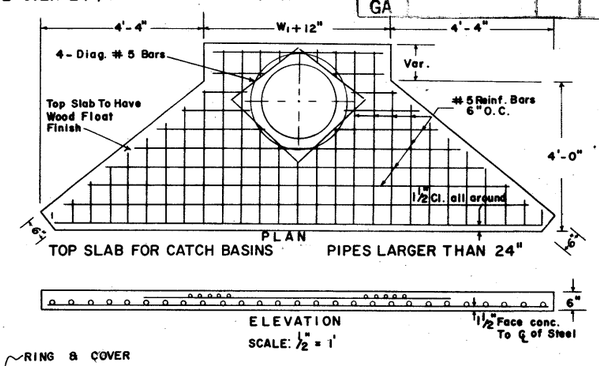

TOP SLAB FOR CATCH BASINS PIPES LARGER THAN 24"

SCALE: ½" = 1'

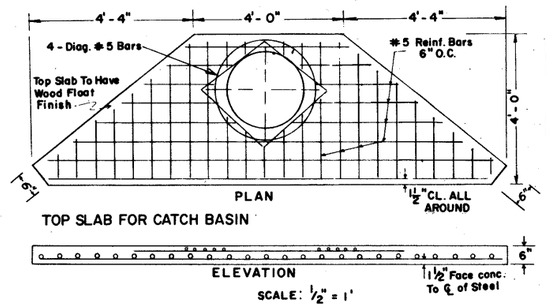

SCALE: ½" = 1'

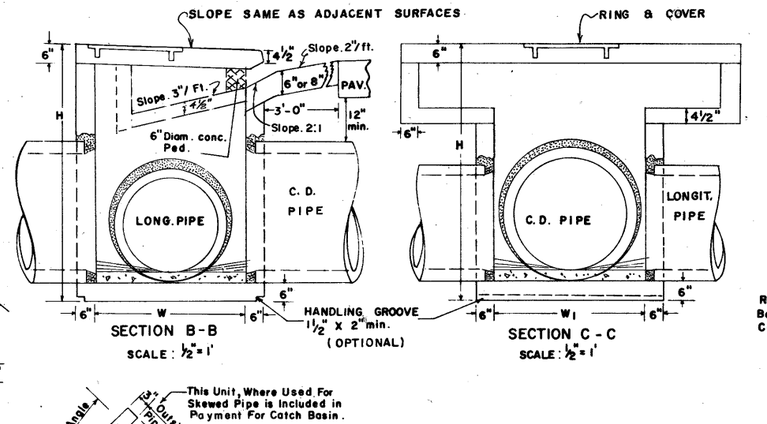

REINFORCING - ISOMETRIC VIEW

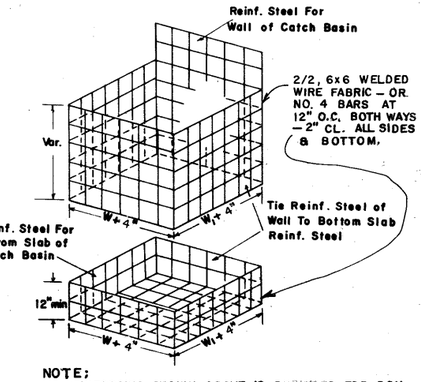

NOTE:
REINFORCING SHOWN ABOVE IS REQUIRED FOR BOX SHAPED BASIN. REINFORCING FOR CIRCULAR PRECAST ALTERNATE SHALL BE ACCORDING TO STD. 1040.

DETAIL AND ARRANGEMENT OF LADDER BARS

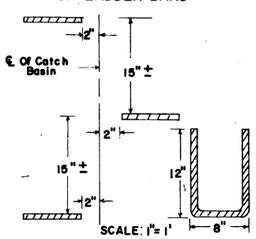

SCALE: 1"=1'

NOTE:
MIN. STEPS LISTED IN GA. D.O.T. LABORATORY'S QUALIFIED PRODUCTS LIST MAY BE SUBSTITUTED. ALL CATCH BASINS WILL HAVE STEPS OR LADDER BARS. NUMBER AND LOCATION OF LADDER BARS IN CATCH BASIN TO BE AS DIRECTED BY THE ENGINEER.

METHOD OF CONNECTING PIPE (WHERE CONC. PIPE HAS TO BE CUT)

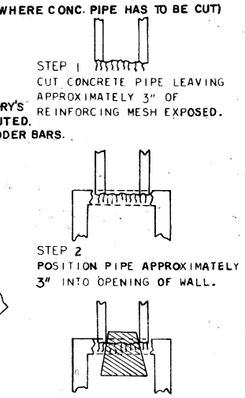

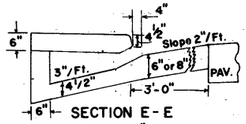

SECTION E-E

SCALE: ½" = 1'

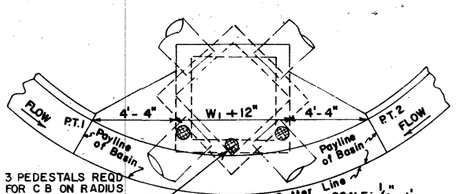

3 PEDESTALS REQ'D FOR C B ON RADIUS

SCALE: ¼" = 1'

SWIVEL SECTION MAY BE USED WHERE SKEWED PIPE CONNECTS TO PRECAST CONCRETE BOX.
ALL DIMENSIONS ARE THE SAME AS SHOWN ON DETAILS FOR CATCH BASIN. DIMENSIONS FROM PT 1 TO PT 2 ARE MEASURED ALONG THE CHORD. UNIT PRICE BID FOR CATCH BASIN INCLUDES ALL CURB AND GUTTER FROM PT 1 TO PT 2.

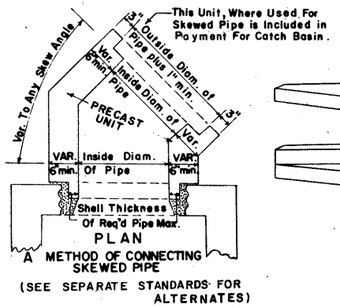

IF THIS SWIVEL SECTION SLAB IS USED TO REDUCE THE W AND W_1 DIMENSIONS, INCREASE THE MINIMUM THICKNESS TO 9" AND USE REINF. STEEL. SEE DETAIL BELOW.

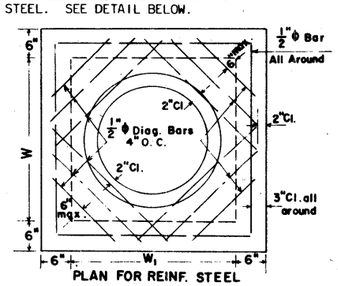

NOTE:
THE ABOVE VIEW DEPICTS PRECAST BOX, SEE SEPARATE STANDARDS FOR CIRCULAR ALTERNATE OR BUILT-IN-PLACE BOX.

TYPICAL ISOMETRIC VIEW

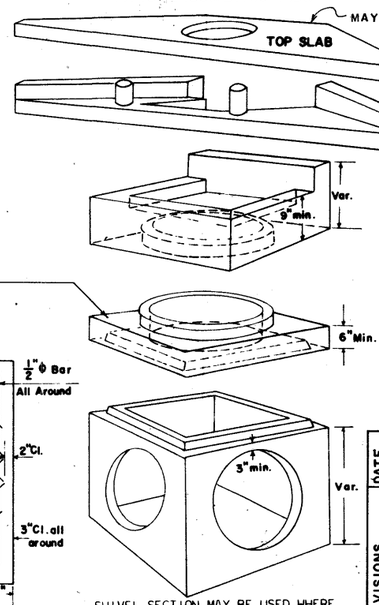

SWIVEL SECTION MAY BE USED WHERE SKEWED PIPE CONNECTS TO PRECAST CONCRETE BOX.

NO SCALE

ALL JOINTS BETWEEN PRECAST RISERS OR BETWEEN PRECAST BASE AND RISER WILL BE KEYED. KEYED JOINTS SHOWN ARE TYPICAL AND MAY BE VARIED.

DIMENSIONS FOR CATCH BASINS		
PIPE SIZE	NORMAL W OR W_1	MIN. H
12"	3'-0"	4'-4"
15"	3'-0"	4'-7"
18"	3'-0"	4'-10"
24"	3'-0"	5'-6"
30"	3'-6"	6'-2"
36"	4'-0"	6'-10"
42"	5'-0"	7'-4"
48"	5'-0"	8'-0"
54"	6'-0"	8'-6"
60"	6'-0"	9'-2"

NOTE:
DIMENSIONS FOR CATCH BASINS ARE BASED UPON TYPICAL OUTSIDE DIAMETERS OF CONCRETE PIPES AND MAY BE VARIED IF CONDITIONS PERMIT AND THE ENGINEER APPROVES. W & W_1 DIMENSIONS DO NOT HAVE TO BE EQUAL.

ALTERNATE:
BUILT-IN-PLACE, PRECAST BOX, AND/OR PRECAST CIRCULAR UNITS WITH THE REQUIRED ADAPTERS, REDUCERS, FITTINGS, CONNECTIONS, ETC. MAY BE USED IN COMBINATIONS.

NOTE:
FOR RING & COVER DETAILS AND OTHER DETAILS NOT SHOWN, SEE STANDARD 1034 E FOR BUILT-IN-PLACE CATCH BASIN.

DETAIL OF TOP SLAB, REINF. STEEL & CLEARANCES REQ'D

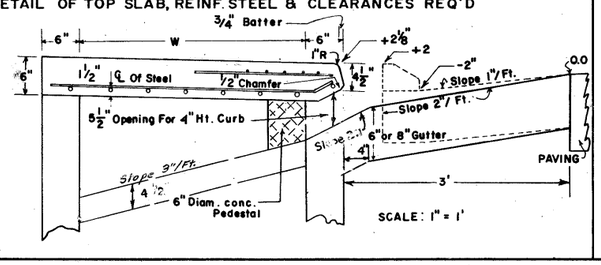

SCALE: 1" = 1'

REVISIONS		DATE
BY		
RMU	Rev. C.B. Throat design	5-5-72
RMU	GENERAL REVISIONS	9-27-82

DEPARTMENT OF TRANSPORTATION
STATE OF GEORGIA

STANDARD PRECAST CATCH BASINS

FOR USE WITH CURB (4" HT.) & GUTTER IN SAG OR LOW POINTS

SCALE AS SHOWN — FEB., 1967

DESIGNED
DRAWN RWH
TRACED AVS
CHECKED RBS

SUBMITTED: STATE ROAD DESIGN ENGINEER

APPROVED: STATE HIGHWAY ENGINEER

NUMBER 1034E PRECAST

STATE	PROJECT NUMBER	SHEET NO.	TOTAL SHEETS
GA.			

CATCH BASIN

(IF CATCH BASIN HAS LONGITUDINAL PIPE OVER 24," SEE DETAILS AT FAR RIGHT)

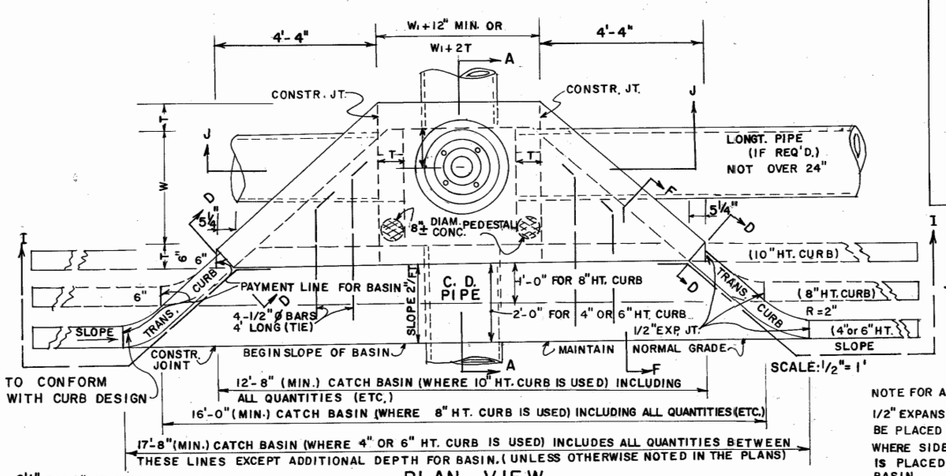

PLAN VIEW

SCALE: ½" = 1'

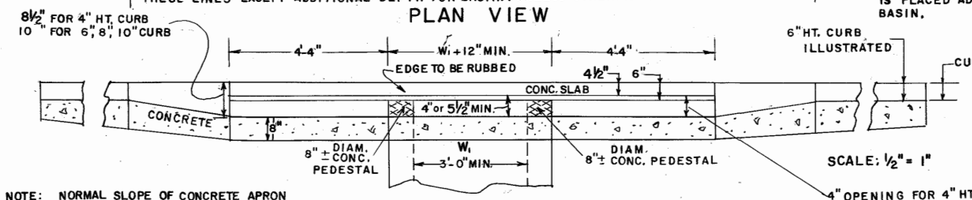

SECTION I-I

NOTE: NORMAL SLOPE OF CONCRETE APRON TO BE INCREASED UP TO 8" TOTAL, WHERE "H" PERMITS AND LONGITUDINAL PIPE IS LOWERED FOR OTHER REASONS.

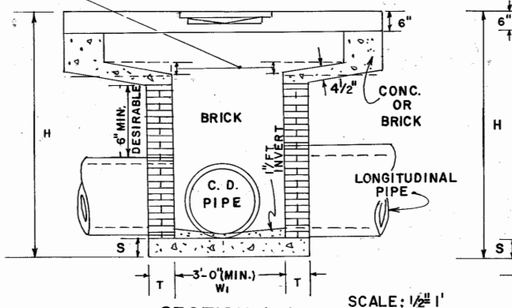

SECTION J-J

SCALE: ½" = 1'

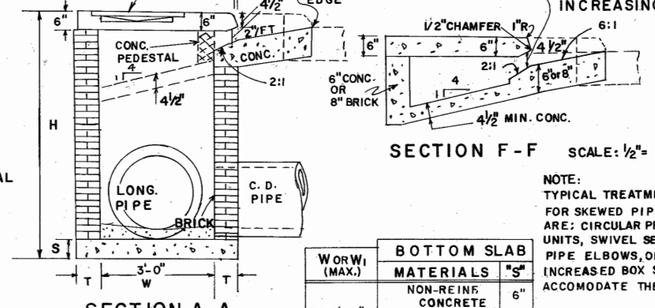

SECTION A-A

SECTION F-F SCALE: ½" = 1'

W OR W₁ (MAX.)	BOTTOM SLAB MATERIALS	"S"
TO 4'-6"	NON-REINF. CONCRETE	6"
	OR BRICK	8"
OVER 4'-6"	CONC. REINF W₁ #4 BARS 12" O.C. BOTH WAYS, 2" CL. FROM SLAB TOP.	8"

NOTE: TYPICAL TREATMENTS FOR SKEWED PIPES ARE: CIRCULAR PRECAST UNITS, SWIVEL SECTION, PIPE ELBOWS, OR INCREASED BOX SIZE TO ACCOMODATE THE SKEW.

NOTE FOR ALL CATCH BASINS:

1/2" EXPANSION JOINT MATERIAL SHALL BE PLACED AROUND THE CATCH BASIN WHERE SIDEWALK OR MEDIAN PAVEMENT IS PLACED ADJACENT TO THE CATCH BASIN.

DETAIL OF TOP SLAB, REINF. STEEL & CLEARANCES REQ'D,

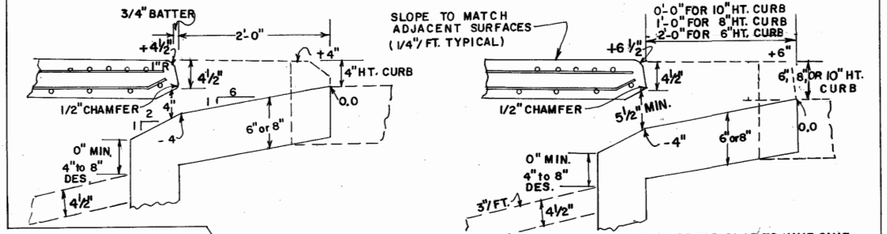

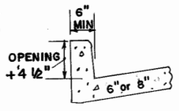

SEC. D-D

CASTING DETAILS

3° to 7° DRAFTS TYPICAL

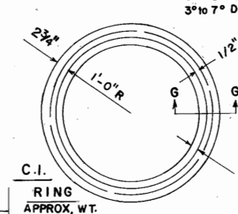

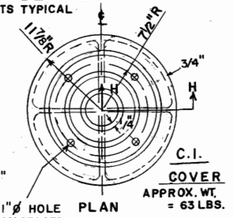

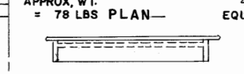

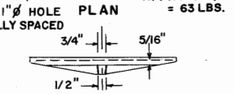

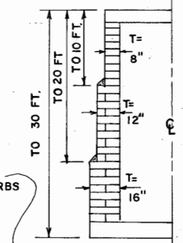

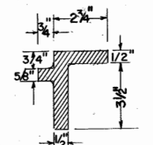

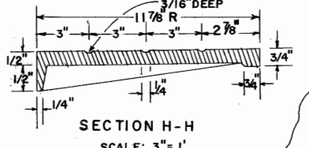

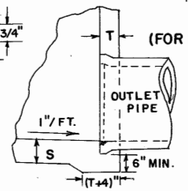

ALTERNATE TO INVERT

(FOR USE WITH LONGITUDINAL PIPE OVER 24" OR FOR USE WITH RECESSED BOX)

CATCH BASIN (WITH PROTRUDED BACK)

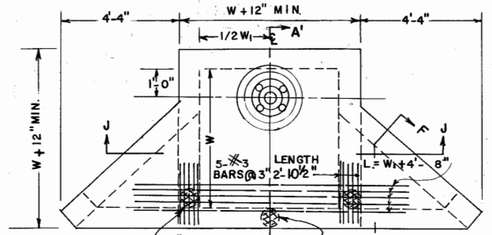

NOTE: CATCH BASIN DETAILS NOT SHOWN HERE WILL BE SIMILAR TO THOSE AT FAR LEFT FOR NORMAL CATCH BASIN.

PART PLAN

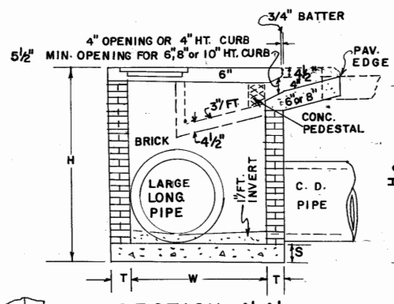

SECTION A'-A'
(FOR LARGE LONGITUDINAL PIPE)

NOTE;
RECESSED BOX TO BE USED ONLY WHERE SPECIFIED IN THE PLANS. SHALLOW LONGT. PIPE OR UNDERGROUND OBSTRUCTION TYPICAL.

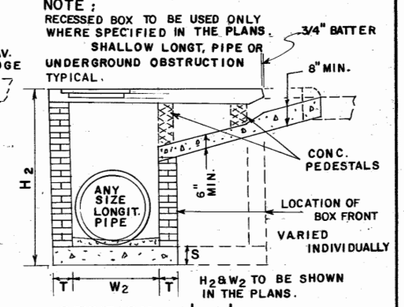

SECTION A'-A'
(FOR RECESSED BOX)

CATCH BASIN ON RADII

NOTE: DO NOT LOCATE CATCH BASIN ON RADII, IF OTHER ALTERNATES ARE FEASIBLE.

DETAILS ARE SHOWN FOR 10" HT. CURB. SEE STD. 1034 F PRECAST FOR CATCH BASIN ON RADII WITH 4'6" OR 8" HT. CURB.

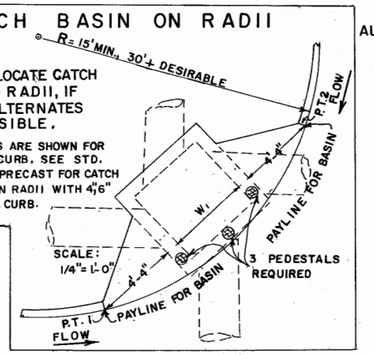

NOTE: PRECAST BOX (STD.) 1034 F PRECAST) WITH FLUSH JOINT AT BOTTOM SHOWN. ADAPTERS WILL BE REQUIRED WITH CIRCULAR UNITS. (STD. 1040.) PRECAST BOX, CIRCULAR, AND/OR BUILT-IN-PLACE CONSTRUCTION MAY BE USED IN COMBINATIONS.

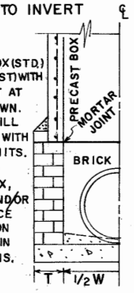

PRECAST BOX ON BRICK (HALF-SECTION)

DETAIL OF TOP REINFORCED CONCRETE SLAB

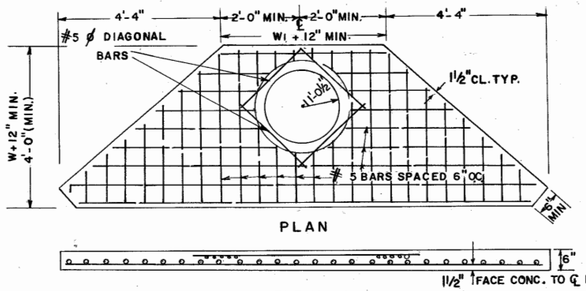

NOTE: ALL BARS IN PLAN VIEW ARE SPACED AT 6" O.C.

NOTE: FOR PLAN DETAIL OF REINFORCING STEEL IN TOP PORTION OF SLAB. SEE PART PLAN. AT TOP RIGHT.

NOTE: TOP SLAB MAY BE CAST IN PLACE OR PRECAST. IF SLAB IS CAST IN PLACE, BUILDERS PAPER IS TO BE PLACED BETWEEN THE CATCH BASIN & TOP SLAB.

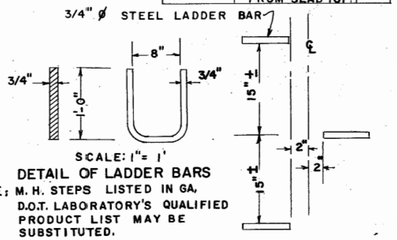

SCALE: 1" = 1'

DETAIL OF LADDER BARS

NOTE: M. H. STEPS LISTED IN GA. D.O.T. LABORATORY'S QUALIFIED PRODUCT LIST MAY BE SUBSTITUTED.

ALL CATCH BASINS WILL HAVE STEPS OR LADDER BARS, NUMBER & LOCATION TO BE AS DIRECTED BY THE ENGINEER.

ΔE = MINIMUM DIFFERENCE IN ELEVATION FROM PAVEMENT EDGE TO FLOW LINE OF OUTLET PIPE

TYPICAL MIN. DIMENSIONS			
PIPE DIA.	H (MIN.)	W OR W₁	(MIN.) E
12	4'-4"	3'-0"	3'-1"
15	4'-7"	3'-0"	3'-4"
18	4'-10"	3'-0"	3'-7"
24	5'-6"	3'-0"	4'-2"
30	6'-2"	3'-7"	4'-10"
36	6'-10"	4'-6"	5'-5"
42	7'-4"	5'-3"	5'-9"
48	8'-0"	6'-0"	6'-4"
54	8'-6"	6'-8"	6'-10"
60	9'-2"	7'-4"	7'-5"

NOTE: THE MIN. H & ΔE GIVEN IN ABOVE TABLE ARE BASED UPON TYPICAL OUTSIDE DIAMETERS OF CONC. PIPE AND MAY BE VARIED IF CONDITIONS PERMIT WITH THE VARIED DIMENSIONS SPECIFIED IN THE PLANS OR DIRECTED BY THE ENGINEER. W & W₁ DIMENSIONS DO NOT HAVE TO BE EQUAL.

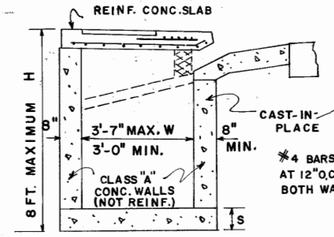

NON-REINFORCED SMALL BASIN (W₁ NOT OVER 3'-7")

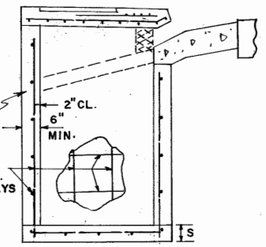

REINFORCED CONCRETE

CONSTRUCTION ALTERNATES

NOTE: DETAILS NOT SHOWN ABOVE FOR CONSTRUCTION ALTERNATES WILL BE SIMILAR TO BRICK CATCH BASIN DETAILS. SEE SEPARATE STANDARDS FOR PRECAST ALTERNATES.

DETAIL OF TOP REINFORCED CONCRETE SLAB

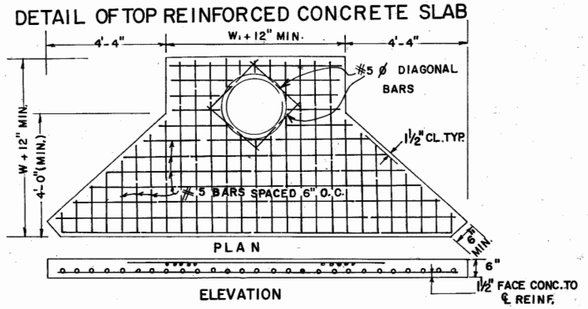

NOTE: PIPE SIZES, NUMBER, ALIGNMENT AND INVERTS SHOWN ARE ILLUSTRATIVE. SEE PLANS FOR SPECIFICS. INVERTS TO BE FORMED WITH GROUT OR CONCRETE AS DIRECTED BY THE ENGINEER OR AS SHOWN IN THE PLANS.

DEPARTMENT OF TRANSPORTATION
STATE OF GEORGIA

STANDARD
CATCH BASINS

FOR USE WITH 4", 6", 8", OR 10" HT. HEADER OR INTEGRAL CURBS — IN SAGS OR LOW POINTS

SCALE AS SHOWN — REV. & REDR. AUGUST, 1982

REV. & R.M.U.
REDR:
TRA. G.M.E.
CHK. R.K.C.

(SUBMITTED) Floyd E. Hardy
STATE ROAD & AIRPORT DESIGN. ENGR.
(APPROVED) Thomas D. Moseley
STATE HIGHWAY ENGINEER

NUMBER 1034 F

CATCH BASIN (IF CATCH BASIN HAS LONGITUDINAL PIPE OVER 24", SEE DETAILS AT RIGHT

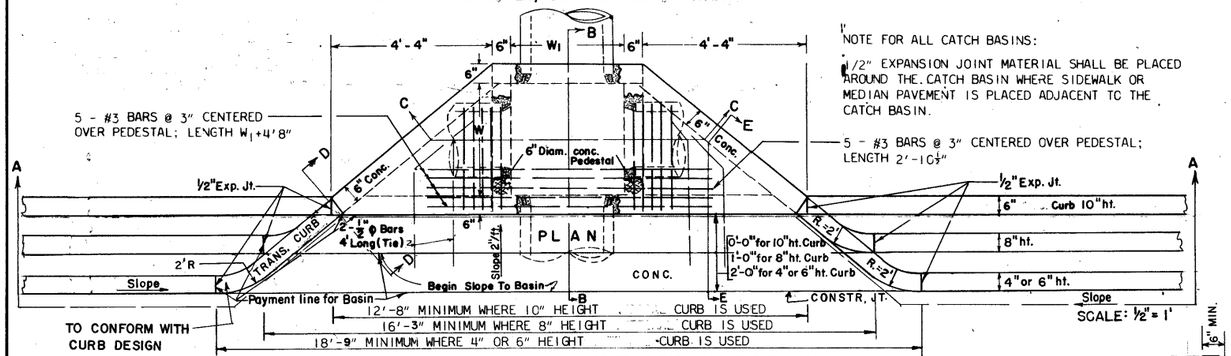

NOTE FOR ALL CATCH BASINS:

½" EXPANSION JOINT MATERIAL SHALL BE PLACED AROUND THE CATCH BASIN WHERE SIDEWALK OR MEDIAN PAVEMENT IS PLACED ADJACENT TO THE CATCH BASIN.

CATCH BASIN (TYPICAL FOR CATCH BASIN WITH LONGITUDINAL PIPE OVER 24")

STATE	PROJECT NUMBER	SHEET NO.	TOTAL SHEETS
GA.			

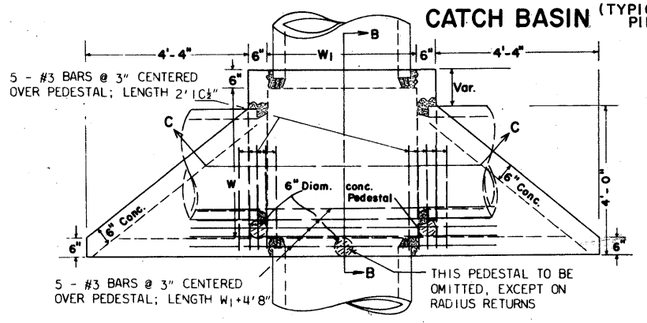

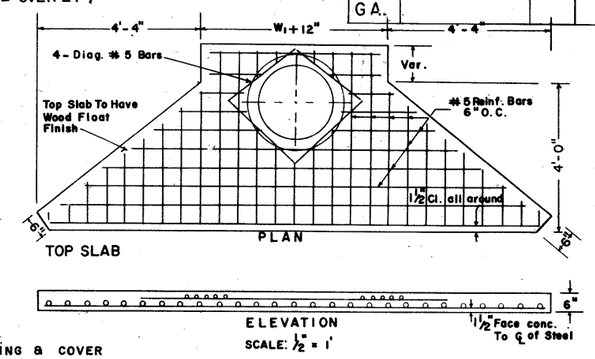

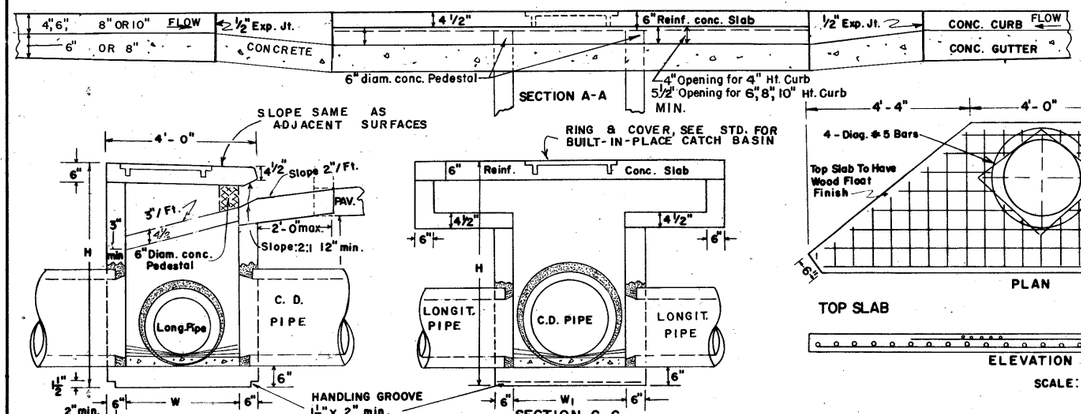

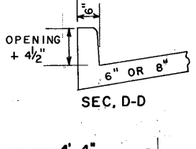

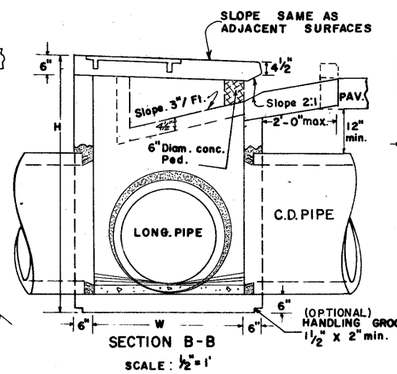

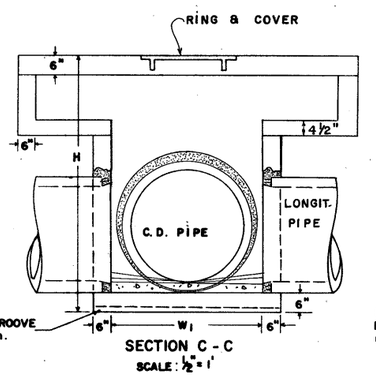

REINFORCING - ISOMETRIC VIEW

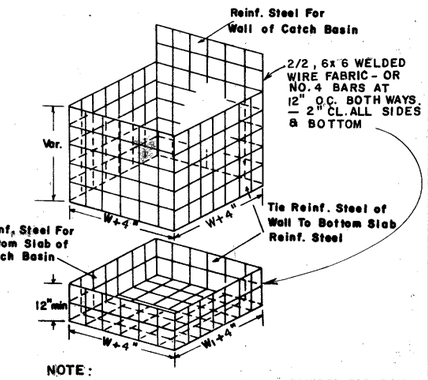

NOTE:
REINFORCING SHOWN ABOVE IS REQUIRED FOR BOX SHAPED BASIN. REINFORCING FOR CIRCULAR PRECAST ALTERNATE SHALL BE ACCORDING TO STD. 1040.

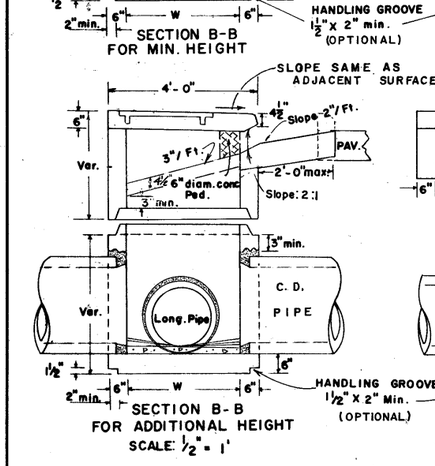

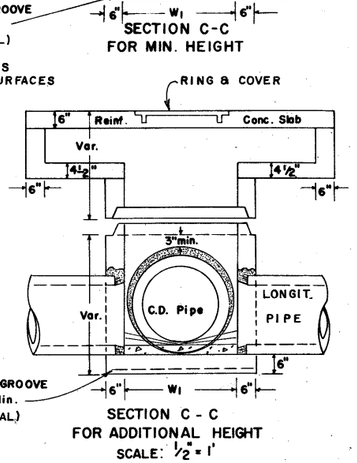

DETAIL AND ARRANGEMENT OF LADDER BARS

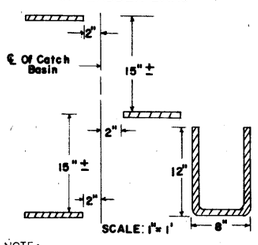

NOTE:
M.H. STEPS LISTED IN GA. D.O.T. LABORATORY'S QUALIFIED PRODUCTS LIST MAY BE SUBSTUTED, ALL CATCH BASINS WILL HAVE STEPS OR LADDER BARS.

NUMBER AND LOCATION OF LADDER BARS IN CATCH BASIN TO BE AS DIRECTED BY THE ENGINEER. AN ALTERNATE TYPE STEP APPROVED BY THE LABORATORY MAY BE SUBSTITUTED.

METHOD OF CONNECTING PIPE (WHERE CONC. PIPE HAS TO BE CUT)

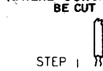

STEP 1
CUT CONCRETE PIPE LEAVING APPROXIMATELY 3" OF REINFORCING MESH EXPOSED.

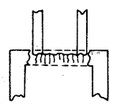

STEP 2
POSITION PIPE APPROXIMATELY 3" INTO OPENING OF WALL.

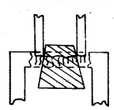

STEP 3
POSITION CONICAL CORE INSIDE OF PIPE AND SEAL WITH GROUT (1/2" MIN. THICKNESS OF GROUT). REMOVE CORE WHEN SET AND RUB GROUT TO SEAL JOINTS.
NO SCALE

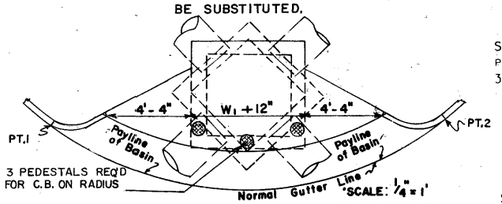

SWIVEL SECTION MAY BE USED WHERE SKEWED PIPE CONNECTS TO PRECAST CONCRETE BOX.
ALL DIMENSIONS ARE THE SAME AS SHOWN ON DETAILS FOR CATCH BASIN. DIMENSIONS FROM PT 1 TO PT 2 ARE MEASURED ALONG THE CHORD. UNIT PRICE BID FOR CATCH BASIN INCLUDES ALL CURB AND GUTTER FROM PT 1 TO PT 2.

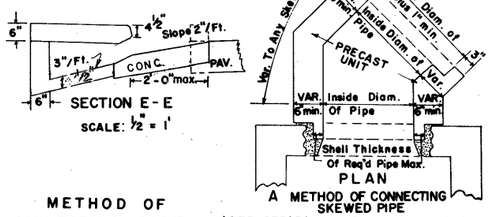

A METHOD OF CONNECTING SKEWED PIPE
(SEE SEPARATE STANDARDS FOR ALTERNATES)

TYPICAL ISOMETRIC VIEW

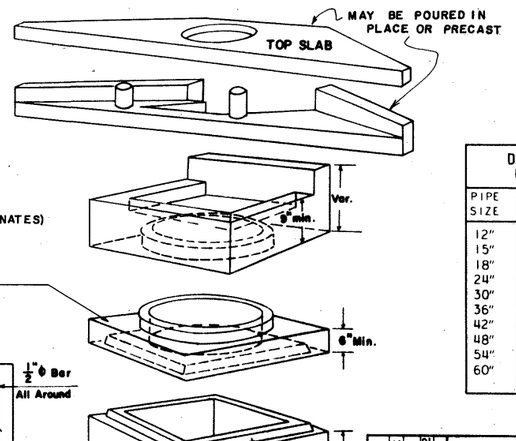

SWIVEL SECTION MAY BE USED WHERE SKEWED PIPE CONNECTS TO PRECAST CONCRETE BOX.
NO SCALE

IF THIS SWIVEL SECTION SLAB IS USED TO REDUCE THE W AND W1 DIMENSIONS, INCREASE THE MINIMUM THICKNESS TO 9" AND USE REINF. STEEL. SEE DETAIL BELOW.

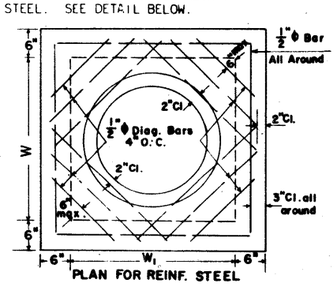

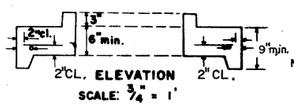

NOTE:
THE ABOVE VIEW DEPICTS PRECAST BOX. SEE SEPARATE STANDARDS FOR CIRCULAR ALTERNATE OR BUILT-IN-PLACE BOX.

DETAIL OF TOP SLAB, REINF. STEEL & CLEARANCES REQ'D

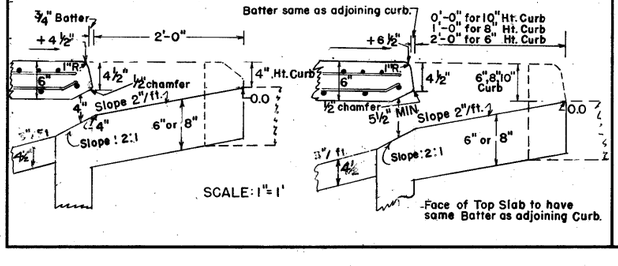

DIMENSIONS FOR CATCH BASINS

PIPE SIZE	NORMAL W OR W1	MIN. H
12"	3'-0"	4'-4"
15"	3'-0"	4'-7"
18"	3'-0"	4'-10"
24"	3'-0"	5'-6"
30"	3'-6"	6'-2"
36"	4'-0"	6'-10"
42"	5'-0"	7'-4"
48"	5'-0"	8'-0"
54"	6'-0"	8'-6"
60"	6'-0"	9'-2"

NOTE:
DIMENSIONS FOR CATCH BASINS ARE BASED UPON TYPICAL OUTSIDE DIAMETERS OF CONCRETE PIPES AND MAY BE VARIED IF CONDITIONS PERMIT AND THE ENGINEER APPROVES. W & W1 DIMENSIONS DO NOT HAVE TO BE EQUAL.

ALTERNATE:
BUILT-IN-PLACE, PRECAST BOX, AND/OR PRECAST CIRCULAR UNITS WITH THE REQUIRED ADAPTERS, REDUCERS, FITTINGS, CONNECTIONS, ETC. MAY BE USED IN COMBINATIONS.

NOTE:
FOR RING & COVER DETAILS AND OTHER DETAILS NOT SHOWN, SEE STANDARD 1034 F FOR BUILT-IN-PLACE CATCH BASIN.

ALL JOINTS BETWEEN PRECAST RISERS OR BETWEEN PRECAST BASE AND RISER WILL BE KEYED. KEYED JOINTS SHOWN ARE TYPICAL AND MAY BE VARIED.

REVISIONS	DATE	BY
Rev. C.B. Throat design	5-5-72	R.M.U.
USE W-HEAD - GRAN. CURB	8-14-79	R.M.U.
GENERAL REVISIONS	9-27-82	R.M.U.

DEPARTMENT OF TRANSPORTATION
STATE OF GEORGIA

STANDARD PRECAST CATCH BASINS

FOR USE WITH 4", 6", 8" OR 10" HT. HEADER OR INTEGRAL CURBS - IN SAGS OR LOW POINTS.

SCALE AS SHOWN — FEB. 1967

DESIGNED
DRAWN RWH
TRACED AVS
CHECKED RBS

SUBMITTED _____ STATE ROAD DESIGN ENGINEER
APPROVED _____ STATE HIGHWAY ENGINEER

NUMBER 1034F PRECAST

STATE	PROJECT NUMBER	SHEET NO.	TOTAL SHEETS
GA.			

CATCH BASIN

(FOR CATCH BASIN WITH LONGIT. PIPE OVER 24", SEE DETAILS AT RIGHT.)

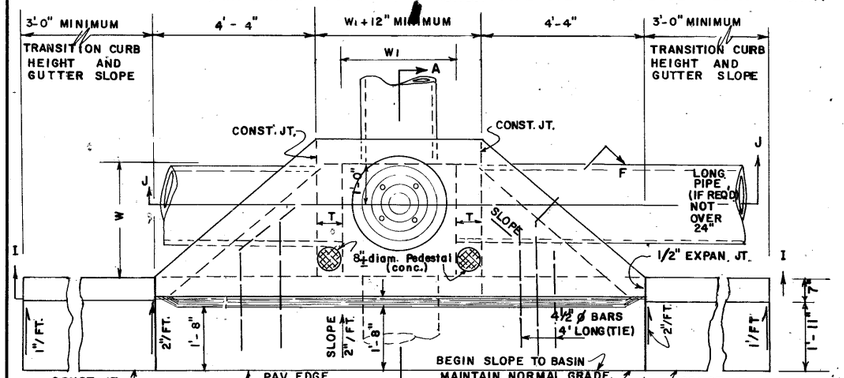

SCALE: ½" = 1'

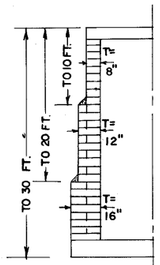

DEPTH LIMITS FOR INCREASING "T"

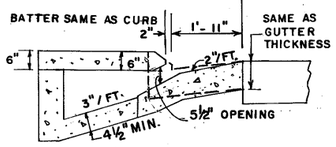

SECTION F-F

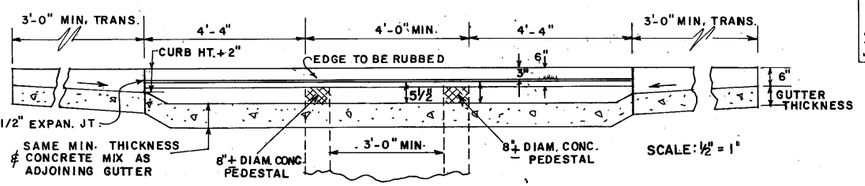

SCALE: ½" = 1'

SECTION I-I

NOTE: NORMAL SLOPE OF CONCRETE APRON TO BE INCREASED UP TO 8" TOTAL WHERE "H" PERMITS AND LONGITUDINAL PIPE IS LOWERED FOR OTHER REASONS.

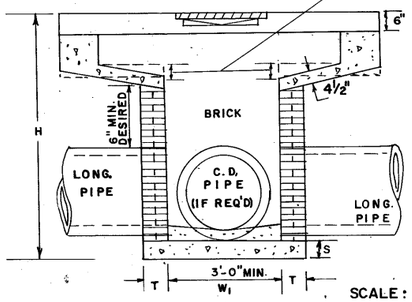

SCALE: ½" = 1'

SECTION J-J

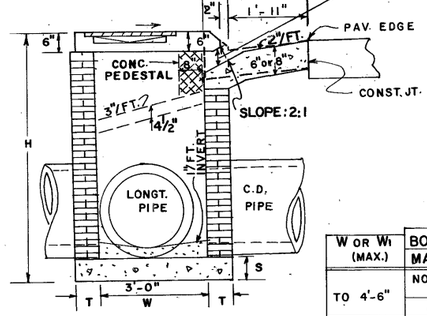

SECTION A-A

W or W1 (MAX.)	BOTTOM SLAB MATERIALS	"S"
TO 4'-6"	NON-REINF. CONCRETE	6"
	OR BRICK	8"
OVER 4'-6"	CONC. REINF. W1 4 BARS 12" O.C. BOTH WAYS 2" CL FROM SLAB TOP	8"

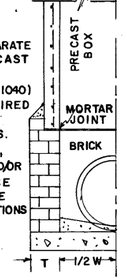

NOTE: SEE SEPARATE STDS. FOR PRECAST ALTERNATES, ADAPTERS (STD. 1040) WILL BE REQUIRED WITH CIRCULAR PRECAST UNITS. PRECAST BOX, CIRCULAR, AND/OR BUILT-IN-PLACE CONSTR. MAY BE USED IN COMBINATIONS

PRECAST BOX ON BRICK (HALF-SECTION)

NOTE:
PIPE SIZES, NUMBER, ALIGNMENT AND INVERTS SHOWN ARE ILLUSTRATIVE. SEE PLANS FOR SPECIFICS. INVERTS TO BE FORMED WITH GROUT OR CONC. AS SHOWN IN THE PLANS OR AS DIRECTED BY THE ENGINEER.

DETAIL OF TOP REINFORCED CONCRETE SLAB

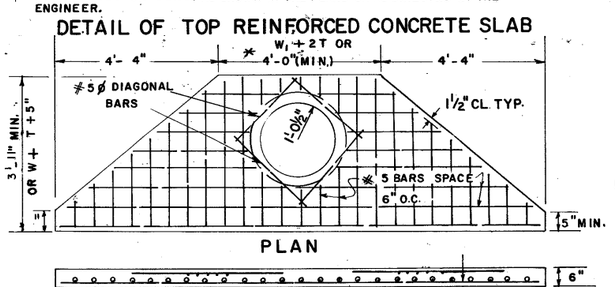

NOTE: ALL BARS IN PLAN VIEW ARE SPACED AT 6" O.C.

NOTE: FOR PLAN DETAIL OF REINFORCING STEEL IN TOP PORTION OF SLAB SEE PART PLAN AT TOP RIGHT.

NOTE: TOP SLAB MAY BE CAST IN PLACE OR PRECAST. IF CAST IN PLACE, BUILDER'S PAPER IS TO BE PLACED BETWEEN THE CATCH BASIN AND TOP SLAB.

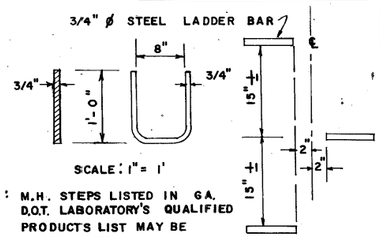

NOTE: M.H. STEPS LISTED IN GA. D.O.T. LABORATORY'S QUALIFIED PRODUCTS LIST MAY BE SUBSTITUTED.

ALL CATCH BASINS WILL HAVE STEPS OR LADDER BARS. NUMBER & LOCATION TO BE AS DIRECTED BY THE ENGINEER.

DETAIL OF LADDER BARS

DETAIL OF TOP SLAB REINF. STEEL & CLEARANCES REQ'D.

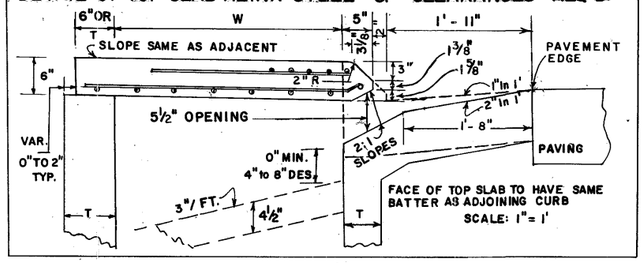

CASTING DETAILS

3° TO 7° DRAFTS TYP.

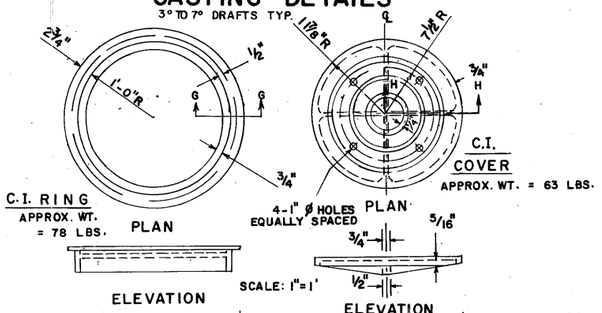

CATCH BASIN ON RADII

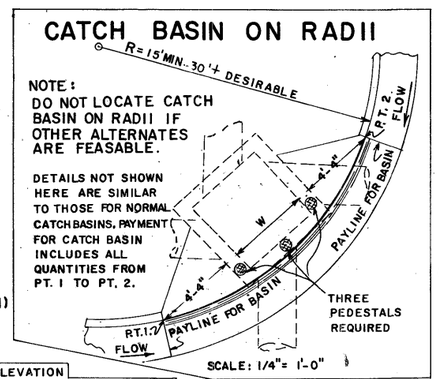

ΔE = MINIMUM DIFFERENCE IN ELEVATION FROM PAVEMENT EDGE TO FLOW LINE OF OUTLET PIPE.

TYPICAL MIN. DIMENSIONS			
PIPE DIA.	H (MIN.)	W or W1	MIN. ΔE
12	4'-4"	3'-0"	3'-3"
15	4'-7"	3'-0"	3'-6"
18	4'-10"	3'-0"	3'-9"
24	5'-6"	3'-0"	4'-4"
30	6'-2"	3'-7"	5'-0"
36	6'-10"	4'-6"	5'-7"
42	7'-4"	5'-3"	5'-11"
48	8'-0"	6'-0"	6'-6"
54	8'-6"	6'-8"	7'-0"
60	9'-2"	7'-4"	7'-7"

NOTE: THE MIN. H & MIN. ΔE GIVEN IN ABOVE TABLE ARE BASED UPON TYPICAL OUTSIDE DIAMETERS OF CONC. PIPE AND MAY BE VARIED, IF CONDITIONS PERMIT WITH VARIED DIMENSIONS SPECIFIED IN THE PLANS OR DIRECTED BY THE ENGINEER. W & W1 DIMENSIONS DO NOT HAVE TO BE EQUAL.

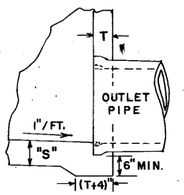

ALTERNATE TO INVERT

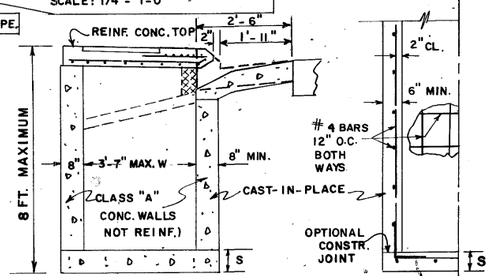

NON REINFORCED SMALL BASIN (W1 NOT OVER 3'-7")

REINFORCED CONC. HALF-SECTION

NOTE: DETAILS NOT SHOWN ABOVE FOR CONSTRUCTION ALTERNATES WILL BE SIMILAR TO BRICK CATCH BASIN DETAILS.

CONSTRUCTION ALTERNATES

CATCH BASIN (WITH PROTUDED BACK)

FOR USE WITH LONGITUDINAL PIPE OVER 24" OR FOR USE WITH RECESSED BOX

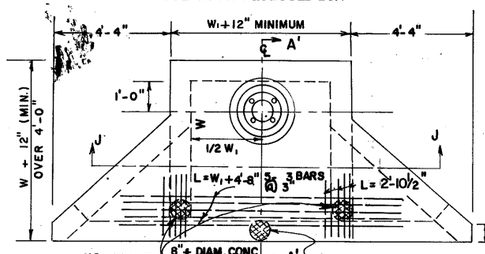

THIRD PEDESTAL REQ'D. FOR C.B. ON RADII OR FOR RECESSED BOX

NOTE:
DETAILS NOT SHOWN HERE WILL BE SIMILAR TO THOSE AT FAR LEFT FOR NORMAL CATCH BASINS.

PART PLAN

NOTE:
RECESSED BOX TO BE USED ONLY WHERE SPECIFIED, H_2 & W_2 TO BE SHOWN IN PLANS

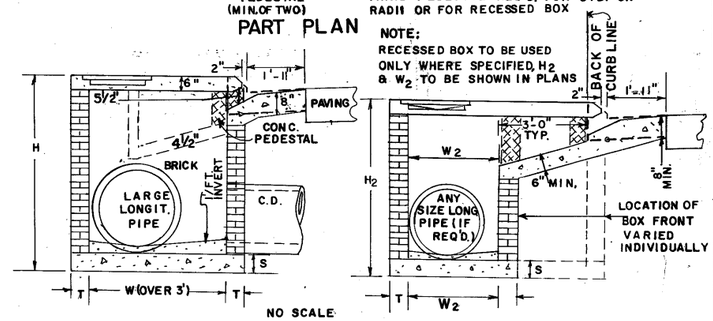

SECTION A'-A' (FOR LONGIT. PIPE OVER 24")

SECTION A'-A' (FOR RECESSED BOX)

DETAIL OF TOP REINFORCED CONCRETE SLAB

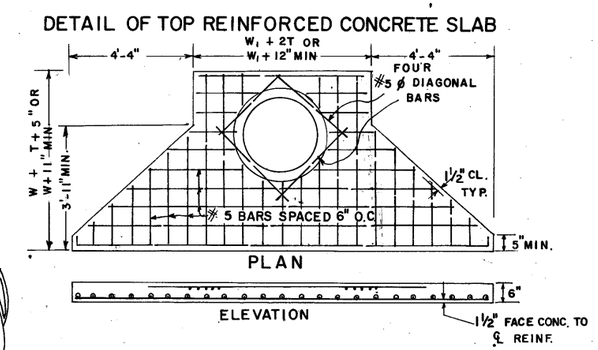

NOTE:
TYPICAL TREATMENT FOR SKEWED PIPES ARE: CIRCULAR PRECAST UNITS; PRECAST SWIVEL SECTIONS; PIPE ELBOWS OR INCREASED BOX SIZES TO ACCOMODATE THE SKEWS.

SEE SEPARATE STANDARDS FOR PRECAST ALTERNATES.

DEPARTMENT OF TRANSPORTATION

STATE OF GEORGIA

STANDARD

CATCH BASINS

FOR USE WITH CURB (6" Mountable) & GUTTER (IN SAGS OR LOW POINTS)

SCALE AS SHOWN — DEC., 1985

DES. RMU	(SUBMITTED) Floyd E. Hardy — STATE ROAD & AIRPORT DESIGN ENGR.	NUMBER
DRW. RMU		
TRA. G.M.E.		1034 G
CHK. R.K.C.	(APPROVED) — STATE HIGHWAY ENGINEER	

STATE	PROJECT NUMBER	SHEET NO.	TOTAL SHEETS
GA.			

CATCH BASIN (IF CATCH BASIN HAS LONGITUDINAL PIPE OVER 24", SEE DETAILS AT RIGHT)

NOTE: OPENING FOR PIPE SHALL BE THE OUTSIDE DIAMETER OF THE REQUIRED PIPE PLUS 1" MINIMUM OPENING SHALL HAVE CORRUGATIONS.

5 - #3 BARS @ 3" CENTERED OVER PEDESTAL LENGTH $W_1 + 4'-8"$

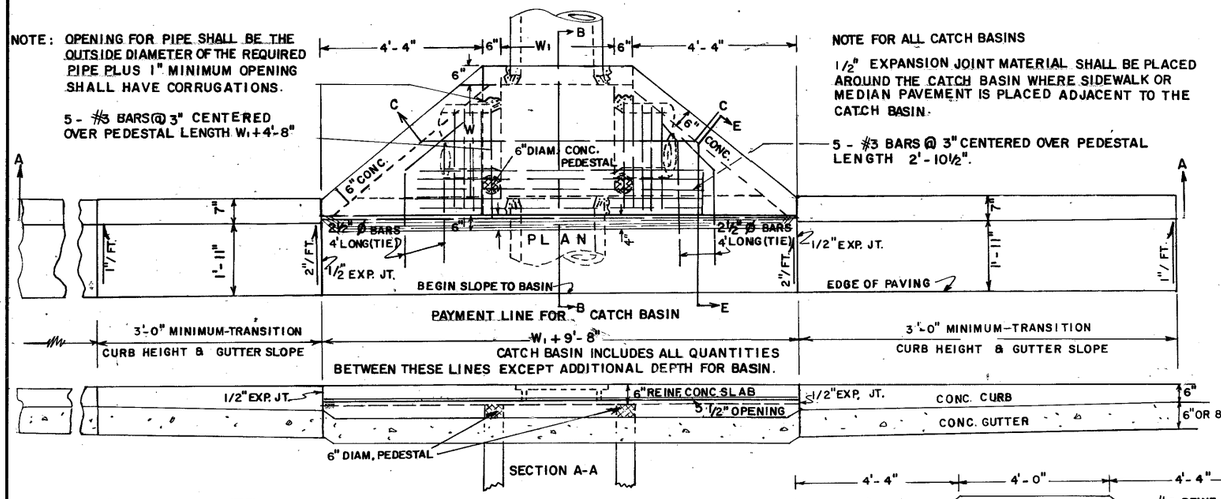

NOTE FOR ALL CATCH BASINS

½" EXPANSION JOINT MATERIAL SHALL BE PLACED AROUND THE CATCH BASIN WHERE SIDEWALK OR MEDIAN PAVEMENT IS PLACED ADJACENT TO THE CATCH BASIN.

5 - #3 BARS @ 3" CENTERED OVER PEDESTAL LENGTH 2'-10½".

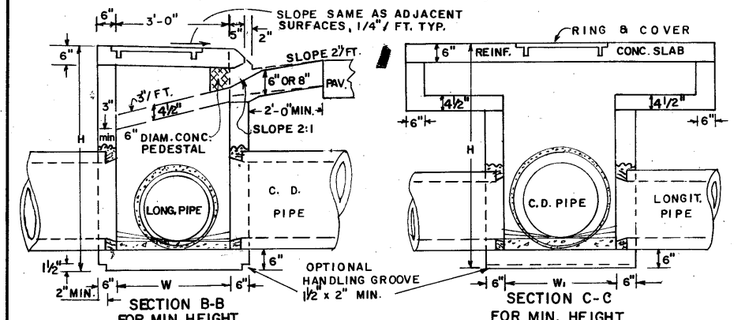

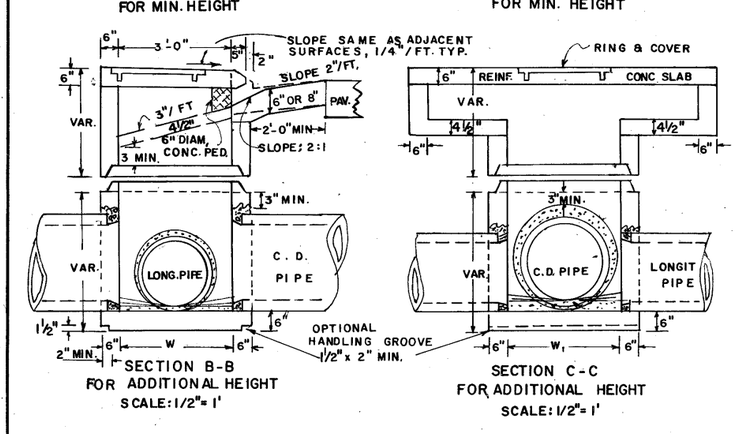

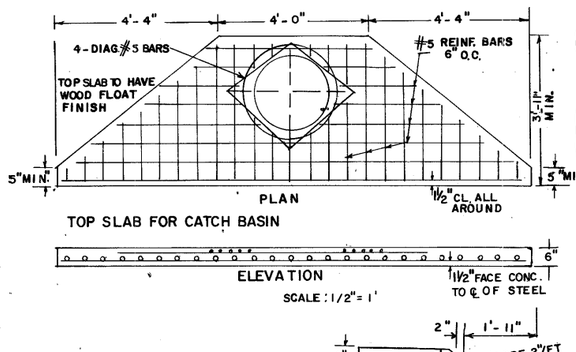

DETAIL AND ARRANGEMENT OF LADDER BARS

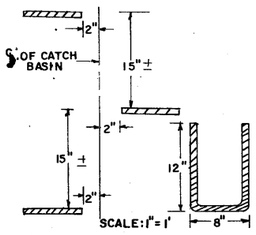

NOTE:
NUMBER AND LOCATION OF LADDER BARS IN CATCH BASIN TO BE AS DIRECTED BY THE ENGINEER.
M.H. STEPS LISTED IN GA. D.O.T. LABORATORY'S QUALIFIED PRODUCTS LIST MAY BE SUBSTITUTED.

METHOD OF CONNECTING PIPE (WHERE CONC. PIPE HAS TO BE CUT)

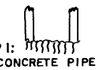

STEP 1:
CUT CONCRETE PIPE LEAVING APPROXIMATELY 3" OF REINFORCING MESH EXPOSED

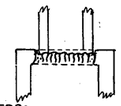

STEP 2:
POSITION PIPE APPROXIMATELY 3" INTO OPENING OF WALL.

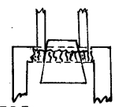

STEP 3:
POSITION CONICAL CONE INSIDE OF PIPE AND SEAL WITH GROUT. (½" MIN. THICKNESS OF GROUT). REMOVE CORE WHEN SET AND RUB GROUT TO SEAL JOINTS.

NO SCALE

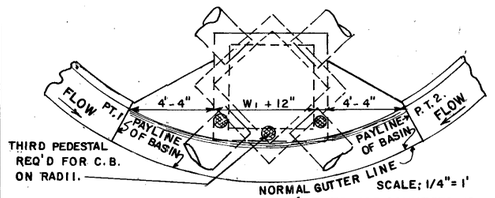

SWIVEL SECTION MAY BE USED WHERE SKEWED PIPE CONNECTS TO PRECAST CONCRETE BOX.
ALL DIMENSIONS ARE THE SAME AS SHOWN ON DETAILS FOR CATCH BASIN, DIMENSIONS FROM PT. 1 TO PT. 2 ARE MEASURED ALONG THE CHORD, UNIT PRICE BID FOR CATCH BASIN INCLUDES ALL CURB AND GUTTER FROM PT. 1 TO PT. 2.

DETAIL OF TOP SLAB, REINF. STEEL & CLEARANCES REQ'D.

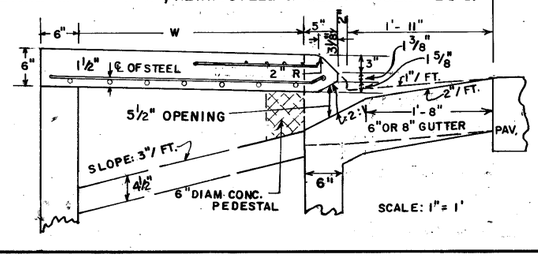

CATCH BASIN (TYPICAL FOR CATCH BASIN WITH LONGITUDINAL PIPE OVER 24".)

5 - #3 BARS @ 3" CENTERED OVER PEDESTAL LENGTH 2'-10½"

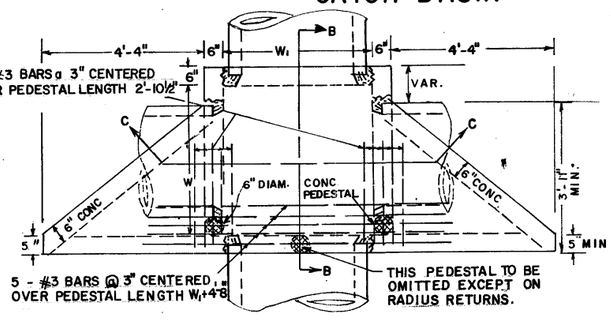

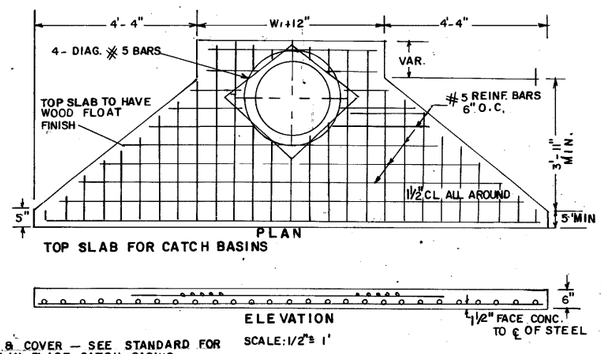

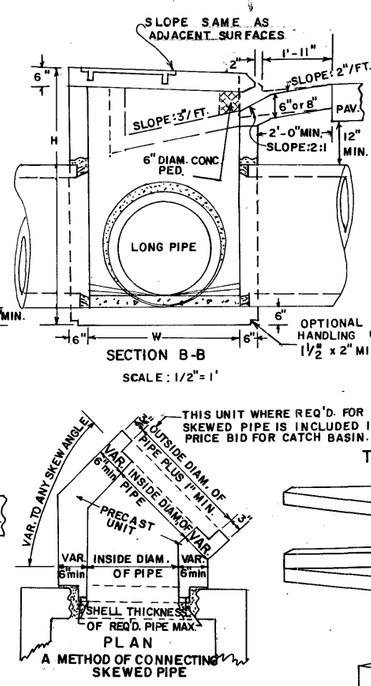

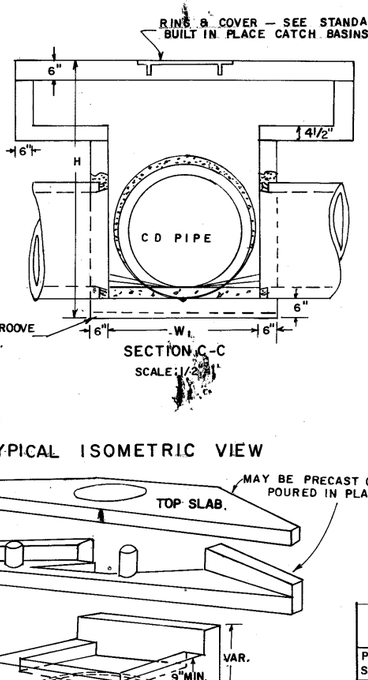

REINFORCING - ISOMETRIC VIEW

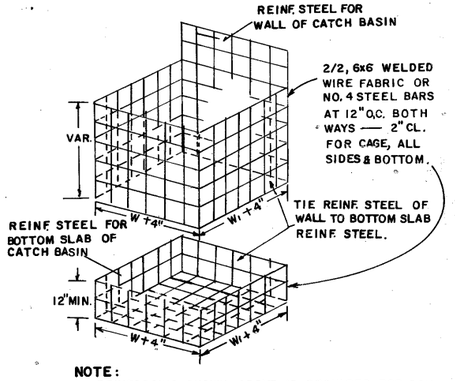

NOTE:
REINFORCING SHOWN ABOVE IS REQUIRED FOR BOX SHAPED BASIN. REINFORCING FOR CIRCULAR PRECAST ALTERNATE SHALL BE ACCORDING TO STD. 1040.

THIS UNIT WHERE REQ'D. FOR SKEWED PIPE IS INCLUDED IN PRICE BID FOR CATCH BASIN.

TYPICAL ISOMETRIC VIEW

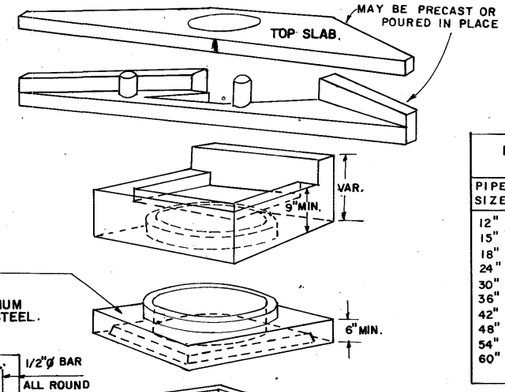

IF THIS SWIVEL SECTION SLAB IS USED TO REDUCE THE W AND W_1 DIMENSIONS, INCREASE THE MINIMUM THICKNESS TO 9" AND USE REINF. STEEL. SEE DETAIL BELOW.

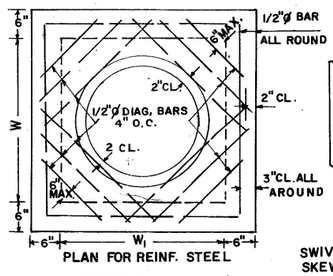

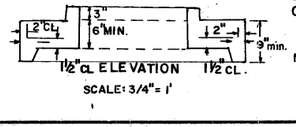

SWIVEL SECTION MAY BE USED WHERE SKEWED PIPE CONNECTS TO PRECAST CONCRETE BOX.

NO SCALE

NOTE:
THE ABOVE VIEW DEPICTS PRECAST BOX SEE SEPARATE STANDARDS FOR CIRCULAR ALTERNATE OR BUILT-IN-PLACE BOX.

ALL JOINTS BETWEEN PRECAST RISERS OR BETWEEN PRECAST BASE AND RISER WILL BE KEYED. KEYED JOINTS SHOWN ARE TYPICAL AND MAY BE VARIED.

DIMENSIONS FOR CATCH BASINS		
PIPE SIZE	NORMAL W or W_1	MIN. H
12"	3'-0"	4'-4"
15"	3'-0"	4'-7"
18"	3'-0"	4'-10"
24"	3'-0"	5'-6"
30"	3'-6"	6'-2"
36"	4'-0"	6'-10"
42"	5'-0"	7'-4"
48"	5'-0"	8'-0"
54"	6'-0"	8'-6"
60"	6'-0"	9'-2"

NOTE:
DIMENSIONS FOR CATCH BASINS ARE BASED UPON TYPICAL OUTSIDE DIAMETERS OF CONCRETE PIPES AND MAY BE VARIED IF CONDITIONS PERMIT AND THE ENGINEER APPROVES. W & W_1 DIMENSIONS DO NOT HAVE TO BE EQUAL.

ALTERNATE:
BUILT-IN-PLACE, PRECAST BOX, AND/OR PRECAST CIRCULAR UNITS WITH THE REQUIRED ADAPTERS, REDUCERS, FITTINGS, CONNECTIONS, ETC. MAY BE USED IN COMBINATIONS.

NOTE:
FOR RING & COVER DETAILS AND OTHER DETAILS NOT SHOWN, SEE STANDARD 1034 G FOR BUILT-IN-PLACE CATCH BASIN.

DEPARTMENT OF TRANSPORTATION
STATE OF GEORGIA

STANDARD PRECAST CATCH BASINS

FOR USE WITH CURB (6" Mountable) & GUTTER (IN SAGS OR LOW POINTS)

SCALE AS SHOWN DEC., 1985

DES. RMU
DRW RMU
TRA. G.M.E.
CHK. R.K.C.

(SUBMITTED) Floyd E. Hardy
STATE ROAD & AIRPORT DESIGN ENGR.
(APPROVED) Hal Ruegge
STATE HIGHWAY ENGINEER

NUMBER 1034G PRECAST

STATE	PROJECT NUMBER	SHEET NO.	TOTAL SHEETS
GA.			

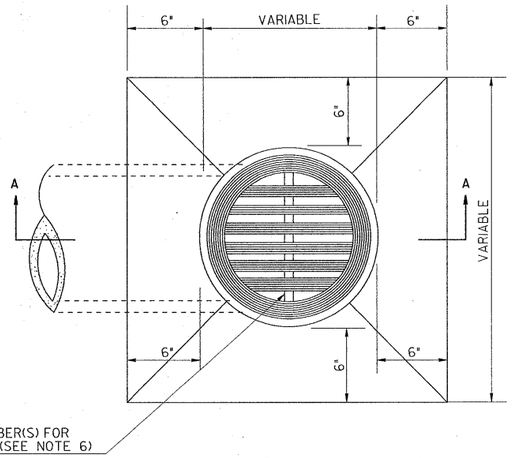

PLAN

"D" = INSIDE DIAMETER OF PIPE;
6" TO 12" TYPICAL, 24" MAX.

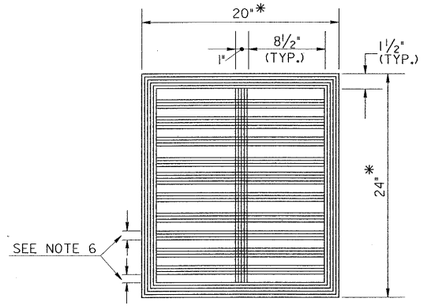

GRATE DETAIL

* THE ENGINEER MAY APPROVE REDUCED GRATE & BOX DIMENSIONS FOR THE SMALLER DRAIN PIPES.

GENERAL NOTES:

1. SPECIFICATIONS: GEORGIA STANDARD, CURRENT EDITION, & SUPPLEMENTS THERETO.
2. CONCRETE COLLARS AND CONCRETE TOP MAY BE EITHER BUILT-IN PLACE CLASS 'B' CONCRETE OR PRECAST CLASS 'A' CONCRETE.
3. PIPES FROM DRAIN INLET SHALL BE OF THE STRENGTH, SIZE, AND MATERIAL APPROVED BY THE ENGINEER; WHERE ELBOWS ARE USED, THE BEND SHALL BE AS SPECIFIED. CONCRETE PIPE MAY BE CLASS II OR CLASS III, UNLESS OTHERWISE SPECIFIED. CORRUGATED PIPE OR OTHER ALTERNATIVES MAY BE APPROVED BY THE ENGINEER.
4. MINIMUM THICKNESS OF CAST IRON GRATES SHALL BE AS FOLLOWS:
   a) 0.5"THK. FOR PIPE ELBOWS 12" OR LESS;
   b) 1.0"THK. FOR PIPE ELBOWS OF 15";
   c) 1.5"THK. FOR 18" OR 24" PIPE ELBOW;
   -OR-BOX TYPE ALTERNATE.
5. PAYMENT FOR DRAIN INLET PER EACH INCLUDES GRATE, CONCRETE COLLAR OR TOP, AND ELBOW OR BOX ALTERNATE. THE PIPE FROM THE ELBOW OR BOX TO MAINLINE CONNECTION SHALL BE PAID FOR AS LIN. FT. OF SIDE DRAIN PIPE, HOWEVER, THE PIPE MATERIAL MAY VARY FROM OTHER SIDE DRAIN ON PROJECT AS APPROVED BY THE ENGINEER. COSTS FOR ALL CONNECTIONS SHALL BE INCLUDED IN THE PAYMENT FOR THE PIPE.
6. GRATE DESIGNS SHOWN ARE TYPICAL. MAXIMUM SLOT OPENINGS SHALL BE 8 1/2 " LONG; 1" WIDE. APPROXIMATELY 50% OF GRATE AREA SHALL BE OPENINGS.

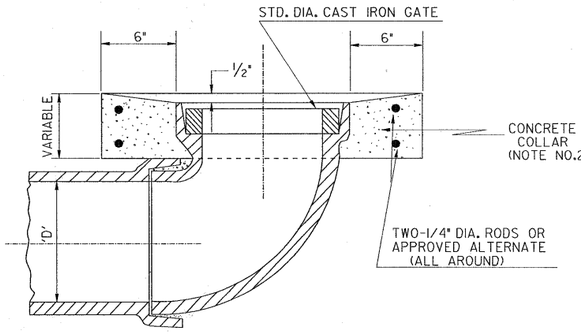

SECTION A-A
(STANDARD ELBOW TYPE)

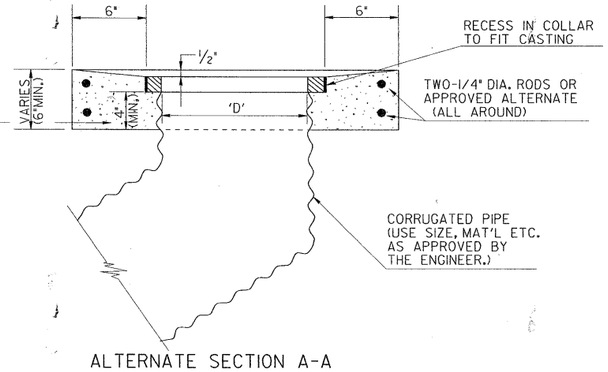

ALTERNATE SECTION A-A
(WHERE APPROVED)

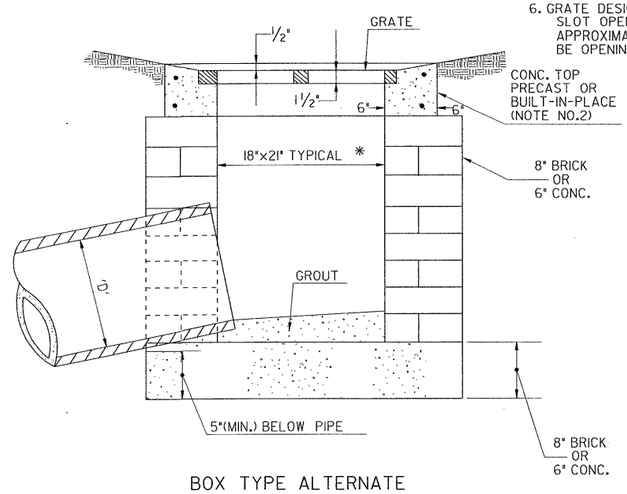

BOX TYPE ALTERNATE

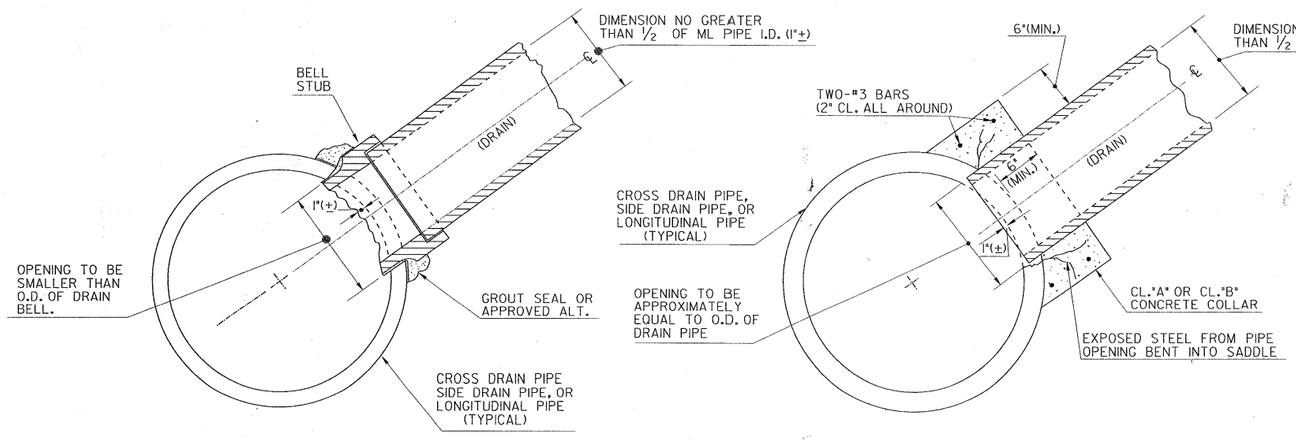

SECTIONAL VIEWS SHOWING TYPICAL ALTERNATE DRAIN CONNECTIONS

NOTES FOR CONNECTIONS:

AN OPENING IN THE MAINLINE PIPE FOR A CONNECTION SHALL BE NO CLOSER THAN ONE (1) FOOT TO THE NEAREST JOINT IN THE MAINLINE PIPE.

OTHER ATERNATE CONNECTIONS MAY INCLUDE PRE-FABRICATED "WYE" OR "TEE" SECTIONS OR BY A CONNECTION TO ANOTHER DRAINAGE STRUCTURE.

COSTS FOR ALL MATERIALS AND LABOR FOR CONNECTIONS OF ANY KIND ARE INCLUDED WITH PAYMENT FOR THE PIPE OR FOR THE INLET

SPECIAL NOTE:
THE INLETS SHOWN ON THIS STANDARD ARE NOT TO BE USED IN TRAVELWAY.

DEPARTMENT OF TRANSPORTATION
STATE OF GEORGIA

STANDARD
DRAIN INLET (ELBOW TYPE AND ALTERNATES) FOR YARD DRAINS

NO SCALE — REV. & REDRN.: NOV., 1999

DATE | REVISION | BY

REV. ____
REDRN. ____
CHK. ____

(SUBMITTED) James A. Granade
STATE ROAD & AIRPORT DESIGN ENGR.

(APPROVED) Paul L. Liddy
CHIEF ENGINEER

NUMBER 1035

STATE	PROJECT NUMBER	SHEET NO.	TOTAL SHEETS
GA.			

CIRCULAR PRECAST REINFORCED CONCRETE SECTIONS

ADAPTER TYPE I

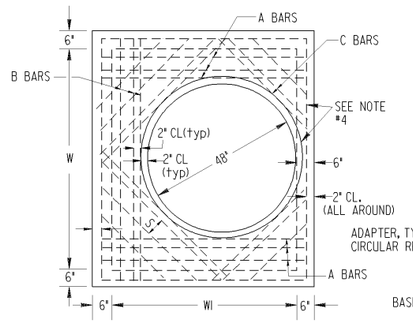

NOTE:

WHERE W=48" (ONLY) A BARS NOT REQUIRED

WHERE WI = 48" (ONLY) B BARS NOT REQUIRED

FOR CONSTRUCTION OF BOX TYPE BASES AND W AND WI DIMENSIONS, SEE APPLICABLE STANDARDS FOR CATCH BASINS OR DROP INLETS.

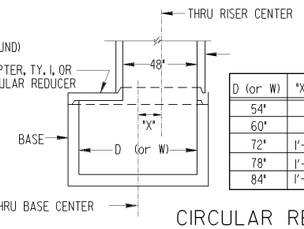

D (or W)	"X"
54"	3"
60"	6"
72"	1'-0"
78"	1'-3"
84"	1'-6"

PLAN OF REINFORCING STEEL

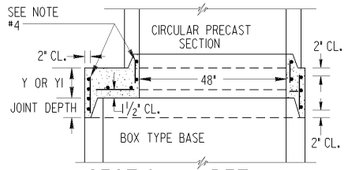

FIRST 2 BARS SPACED WITH 2" CL. AS SHOWN. ALL OTHERS MAX. SPACING OF "S" C. TO C. BARS SHALL BE IN BOTTOM OF SLAB WITH 1-½" CLEARANCE.

SECTIONAL DETAIL

* WHERE W AND WI DIMENSIONS DIFFER, USE SLAB THICKNESS AND REINFORCEMENTS FOR LARGER DIMENSION.

Y = MIN. THICKNESS WHERE HEIGHT OF FILL IS 12 ft., OR LESS, ABOVE TOP OF ADAPTER, TYPE I, OR CIRCULAR REDUCER. YI = MIN. THICKNESS WHERE HEIGHT OF FILL ABOVE ADAPTER, TYPE I, OR CIRCULAR REDUCER = OVER 12 ft.

W & WI or D	BAR SIZE	S (Max)	Y (Min.)	YI (Min)
48"	#4	6"	6"	6"
54"	#4	6"	8"	8"
60"	#5	6"	8"	9"
66"	#6	6"	8"	10"
72"	#6	5½"	9"	11"
84"	#6	5"	9"	12"

CIRCULAR REDUCER SLAB

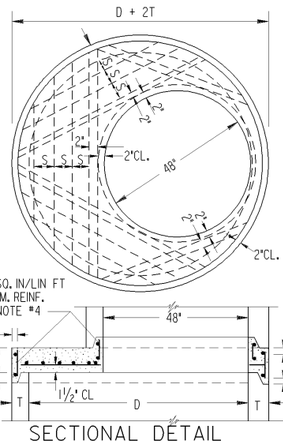

SECTIONAL DETAIL

CIRCULAR RISER SECTIONS-

DESIGN AND STEEL REINFORCEMENT TO COMPLY WITH A.S.T.M. C-478 FOR PRECAST MANHOLE SECTIONS HT. = 1'0" TO 4'0" EACH.

KEYED JOINT REQUIRED AT ALL SECTIONS UNLESS NOTED OTHERWISE

CIRCULAR BASE UNIT-

WALL DESIGN AND REINFORCEMENT TO COMPLY WITH A.S.T.M. C-478 EXCEPT THAT MIN. (T) THICKNESS = 5" AND ALL PRECAST OPENINGS FOR PIPES SHALL HAVE TWO ADDITIONAL VERTICAL REINFORCING BARS AS SHOWN.

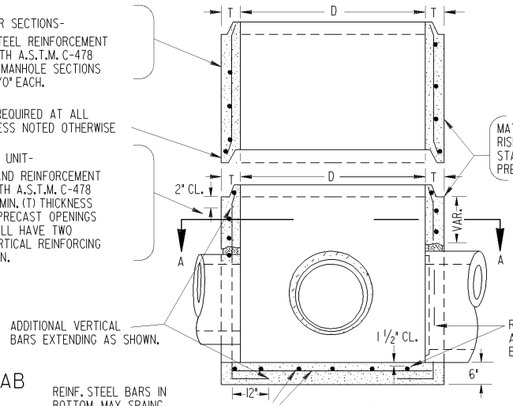

SECTIONAL DETAIL

MIN WALL THICKNESS (T)		
D	BASE	RISER
48"	5"	4"
60"	5"	5"
72"	6"	6"

MATERIALS FOR BASE UNITS AND RISERS WILL COMPLY WITH GA. STANDARD SPECIFICATIONS FOR PRECAST MANHOLE SECTIONS.

D	MAX PIPE SIZE
48"	30"
60"	42"
72"	48"

REINF. STEEL OF WALL LAPPED UNDER AND TIED TO BOTTOM SLAB REINF. BARS ALL AROUND.

REINF. STEEL BARS IN BOTTOM MAX. SPAING 12" C. TO C. BOTH WAYS

D	BAR SIZE	NO.
48"	#5	8
60"	#5	10
72"	#6	12

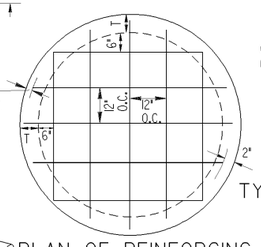

ALL REINF. BARS EXTENDED TO WITHIN 2" OF OUTSIDE OF BASE

PLAN OF REINFORCING STEEL IN BOTTOM SLAB

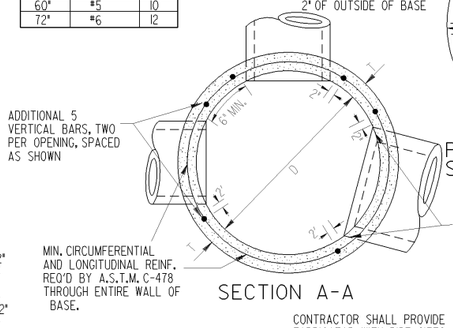

SECTION A-A

OUTLET PIPE-SET BELL OR GROOVE FLUSH WITH CORNERS OR BEVEL CORNERS 2" TO IMPROVE HYDRAULIC EFFICIENCY.

CONTRACTOR SHALL PROVIDE FABRICATOR WITH PIPE SIZES AND ALIGNMENT

ADAPTER TYPE 2

FOR USE WITH CATCH BASINS

ADAPTER, TYPE 2, MAY BE USED WITH DRAINAGE STRUCTURES OTHER THAN CATCH BASINS, IF SO NOTED ON OTHER STANDARDS OR IN THE PLANS.

ADAPTER, TYPE 3, WILL BE USED FOR STRUCTURES WHICH ARE UNDER TRAFFIC.

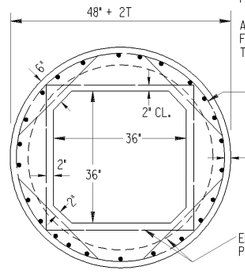

0.12 SQ. IN./LIN FT. CIRCUMFERENTIAL REINF. SEE GEN. NOTE NO. 4

PLAN OF REINFORCING STEEL

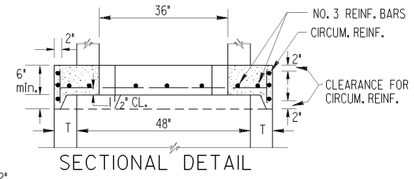

SECTIONAL DETAIL

ADAPTER TYPE 3

FOR USE WITH DROP INLETS

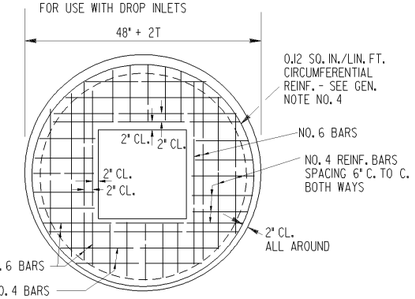

PLAN OF REINFORCING STEEL

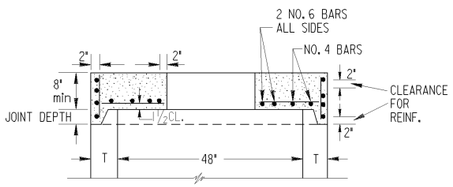

SECTIONAL DETAIL

NOTE: OPENING IN AN ADAPTER, TYPE 3, DEPENDS ON TYPE OF INLET, OPENING = 1'5" X 2'0" FOR INLET TYPES A,B,C, OR D, AND 2'0" X 2'0" FOR INLET, TYPE E (STANDARD 1019-A). FOR OTHER INLET TYPES OPENING EQUAL TO OPENING REQUIRED FOR INLET WITH BOX TYPE BASES.

TYPICAL PLAN VIEWS OF CATCH BASINS

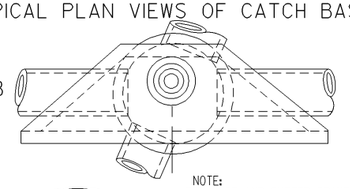

NOTE: FOR CURB AND GUTTER TRANSITION LOCATION RELATIVE TO ROADWAY, ETC., SEE APPLICABLE CATCH BASIN STANDARD.

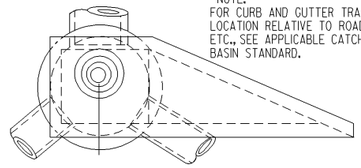

DETAIL FOR CENTERING CIRCULAR SECTION OF CATCH BASINS BACK OF CURB

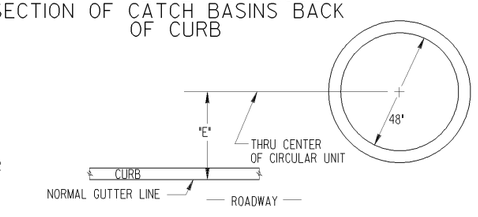

GENERAL NOTES:

1. ALL CIRCULAR SECTIONS WILL HAVE KEYED TYPE JOINT IN ACCORDANCE WITH A.S.T.M. C-478.
2. ALL OPENINGS FOR PIPES OVER 6' IN DIAMETER MUST BE PRECAST.
3. ALL ADAPTERS AND REDUCER SLABS SHALL CONTAIN, IN ADDITION TO STEEL BAR REINF. SHOWN, CIRCUMFERENTIAL REINFORCEMENT IN LIP AND EXTENDING INTO BODY OF SLAB AS SHOWN.
4. FOR CONSTRUCTION ABOVE ADAPTER, TYPE 2, AND TYPE 3, AND BELOW TYPE 1, SEE APPLICABLE GA. STDS. FOR CATCH BASINS OR DROP INLETS.
5. CIRCULAR SECTIONS SHOWN ON THIS STANDARD MAY BE SUBSTITUTED FOR THE BOX TYPE BASE ON GA. STDS. AND CONSTRUCTION DETAILS FOR CATCH BASINS AND DROP INLETS, WHERE STRUCTURE HEIGHT, PIPE SIZE, AND ALIGNMENT PERMIT. SPECIFIED STRUCTURE HEIGHT SHALL BE SUFFICIENT TO ACCOMODATE THE REQUIRED BASE SIZE, ADAPTERS, RISERS, AND TOP PORTION FOR ALLOWANCE OF THE CIRCULAR ALTERNATES.

DROP INLET WITH CIRCULAR SECTIONS

SEE APPLICABLE STANDARD OR CONSTRUCTION DETAILS FOR DROP INLET DETAILS NOT SHOWN HERE.

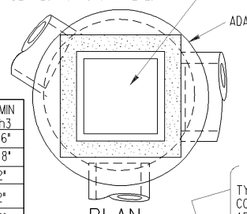

PLAN

INLET TYPE		MIN h3
STD. 1019A	A,B,or C	6"
	D	8"
	E	12"
STD. 1019 B TYPE V1 or V2		12"
9031-S MED.		12"
DITCH D.I.		6"
STD 1010-Ty"C"		8"

TYPICAL: BRICK MASONARY AND/OR CONCRETE CONSTRUCTION PER APPLICABLE SEPARATE STANDARD.

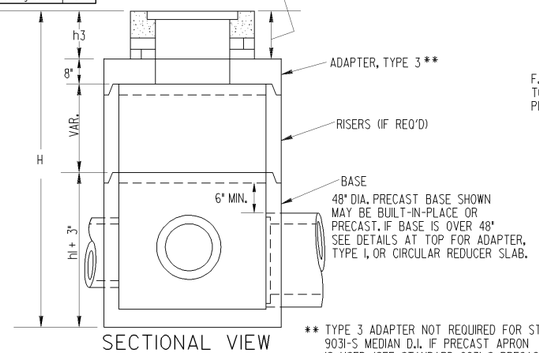

48" DIA. PRECAST BASE SHOWN MAY BE BUILT-IN-PLACE OR PRECAST. IF BASE IS OVER 48" SEE DETAILS AT TOP FOR ADAPTER, TYPE I, OR CIRCULAR REDUCER SLAB.

SECTIONAL VIEW

** TYPE 3 ADAPTER NOT REQUIRED FOR STD. 9031-S MEDIAN D.I. IF PRECAST APRON IS USED. (SEE STANDARD 9031-S PRECAST)

BUILT-IN-PLACE CIRCULAR BASE

(BRICK MASONRY OR CLASS "A" CONCRETE)

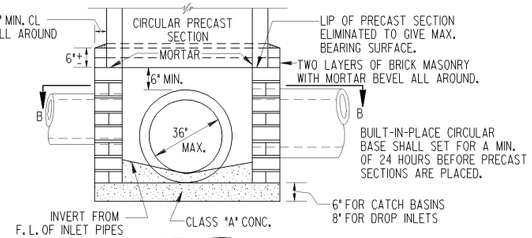

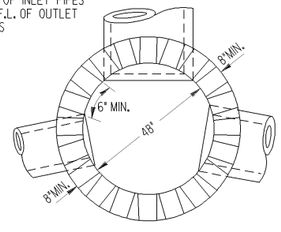

SECTION B-B

PIPE SIZE	MIN. h1
12"	2'-3"
15"	2'-6"
18"	2'-9"
24"	3'-6"
30"	4'-0"
36"	4'-6"
42"	5'-3"
48"	5'-9"

CATCH BASIN WITH CIRCULAR SECTIONS

CONSTRUCTION ABOVE ADAPTER WILL BE EITHER PRECAST, BUILT-IN-PLACE, OR A COMBINATION OF BOTH ACCORDING TO APPLICABLE CATCH BASIN STANDARDS.

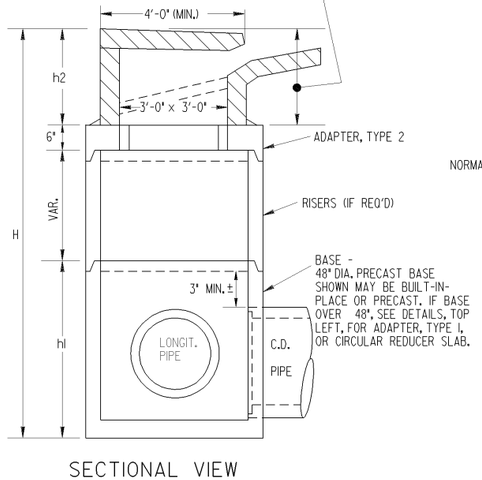

SECTIONAL VIEW

⊛ STD. NO	CURB HEIGHT	MIN. h2	"E"
1033 D; 1033 G	6"	2'-0"	2'-0"
	8"	2'-2"	2'-0"
1033 E	4"	2'-0"	3'-0"
1033 F	4"	1'-11"	4'-0"
	6"	2'-1"	4'-0"
	8"	2'-1"	3'-0"
	10"	2'-1"	2'-0"
1034 D; 1034 G	6"	2'-1"	2'-0"
	8"	2'-2"	2'-0"
1034 E	4"	2'-0"	3'-0"
1034 F	4"	1'-11"	4'-0"
	6"	2'-1"	4'-0"
	8"	2'-1"	3'-0"
	10"	2'-1"	2'-0"

⊛ REFERENCED STANDARD MAY BE PRECAST OR BUILT-IN PLACE

DEPARTMENT OF TRANSPORTATION
STATE OF GEORGIA

STANDARD

CIRCULAR BASE UNITS AND RISERS FOR CATCH BASINS AND DROP INLETS

(CONSTRUCTION ALTERNATES)

NO SCALE — REV. & REDR.: NOV., 1999

DATE / REVISION / BY

DES. ____ (SUBMITTED) James A. Kennedy
DRW. ____ STATE ROAD & AIRPORT DESIGN ENGR.
TRA. ____
CHK. ____ (APPROVED) Chief Engineer

NUMBER 1040

STATE	PROJECT NUMBER	SHEET NO.	TOTAL SHEETS
GA.			

CONCRETE FLARED END SECTION

END SECTION TO PIPE JOINT SHOWN AS TYPICAL:
HUB END ON OUTLET END SECTIONS;
SOCKET END ON INLET END SECTIONS
(SEE NOTE "A")

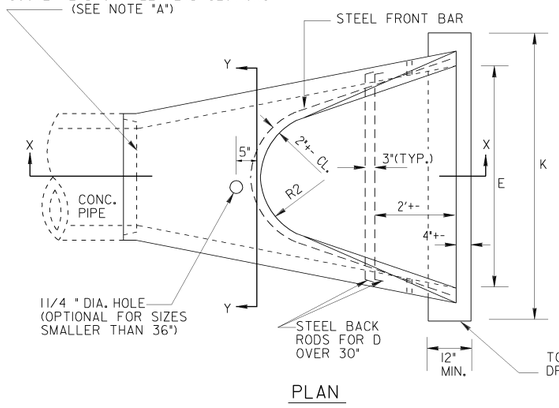

PLAN

INSTALLATION: (D OVER 30") CABLE, CHAIN, OR LIFTING PIN WILL EXTEND THRU 1 1/4 " HOLE WITH A PLATE OR REBAR CONNECTED INSIDE THE CONC. SECTION TO PROVIDE ADEQUATE BEARING AREA OR A LIFTING ASSEMBLY DEVICE MAY BE USED TO GIVE 3 LIFT POINTS. HOOKS CONNECTED DIRECTLY TO CONCRETE IS NOT PERMITTED. DAMAGE FROM IMPROPER HANDLING SHALL BE CAUSE FOR REJECTION.

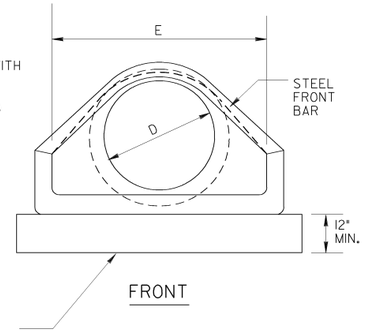

FRONT

NOTE: DO NOT CUT CONCRETE PIPE. USE FULL LENGTH SECTIONS ONLY. WARP SLOPE TO CONFORM WITH PIPE LENGTH AND END SECTION.

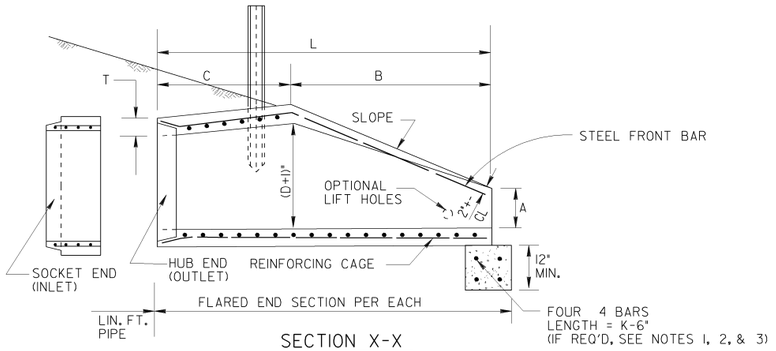

SECTION X-X

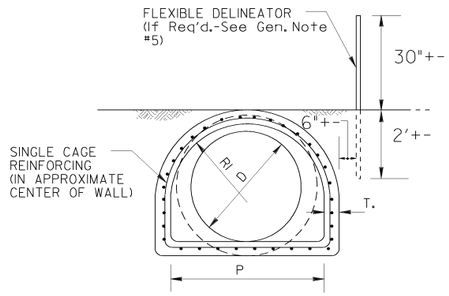

SECTION Y-Y

REINFORCING CAGE:

(1.) WIRE FABRIC HAVING EQUAL STEEL AREA AS INNER CAGE FOR CLASS II PIPE, AASHTO M-170.
(2.) ALTERNATE: # 3 BARS SPACED 12"+- LONGITUDINALLY WITH # 2 BARS TRANVERSELY AT 6' O.C. MAX. SPACING, SPOT WELDED OR TIED TO FORM CAGE. (BACK RODS MAY BE OMITTED.)

NOTE "A":

CONTRACTOR WILL INFORM PRODUCER IF CONCRETE FLARED END SECTION IS FOR INLET OR FOR OUTLET END. SOCKET (TONGUE OR SPIGOT) END IS REQUIRED FOR INLETS. HUB (GROOVE OR BELL) END IS REQUIRED FOR OUTLETS. SOCKET TO SOCKET OR HUB TO HUB JOINT WILL NOT BE ACCEPTED UNLESS A REINFORCED CONCRETE COLLAR IS BUILT AROUND THE JOINT WITH NO PAYMENT BEING MADE FOR THE COLLAR.

FLARED END SECTIONS SHALL BE JOINTED TO PIPE WITH ALL SPACE IN THE JOINT FILLED WITH EITHER BITUMINOUS PLASTIC CEMENT OR PREFORMED PLASTIC GASKET (SEC. 848).

WALL THICKNESS (T) IS SHOWN AS NOMINAL AND MAY BE INCREASED AT PRODUCER'S OPTION FOR DESIRED JOINT DESIGN OR TO ALLOW A FLAT OUTSIDE BOTTOM ON THE FLARE, WITH INSIDE DIMENSIONS OF FLARE RETAINED AS SHOWN.

T = PIPE WALL THICKNESS (0.0833D + 1"+- TYPICAL)

DIMENSIONS AND REINFORCING FOR CONCRETE FLARED END SECTIONS (+- 1" TOLERANCE)

PIPE DIA	FRONT BAR	BACK RODS	SLOPE +-	A	B	C *	L *	E	P	RI	R2	OUTLET TOEWALL (IF REQ'D) K= E + 2'	CU.YDS. CONC.
12"	1-#3 x 5' 4"	NOT REQ'D.	2.2:1	4"	2'0"	4' 1"	6'1"	2'0"	1'8"	10"	9"	4'-0"	.148
15"	1-#3 x 6' 0"	NOT REQ'D.	2.2:1	6"	2'3"	3'10"	6'1"	2'6"	2'0"	1'0"	11"	4'-6"	.167
18"	1-#3 x 7' 2"	NOT REQ'D.	2.2:1	9"	2'3"	3'10"	6'1"	3'0"	2'5"	1'4"	1'0"	5'-0"	.185
24"	1-#3 x 9' 10"	NOT REQ'D.	2.4:1	10"	3'8"	2' 6"	6'2"	4'0"	2'9"	1'5"	1'2"	6'-0"	.222
30"	1-#4 x 11' 8"	NOT REQ'D.	2.4:1	12"	4'6"	1' 8"	6'2"	5'0"	3'1"	1'6"	1'3"	7'-0"	.259
36"	1-#4 x 13' 10"	2-#4 x 6'3"	2.4:1	15"	5'3"	2'11"	8'2"	6'0"	4'0"	2'0"	1'8"	8'-0"	.296
42"	1-#4 x 13' 10"	2-#4 x 7'4"	2.4:1	21"	5'3"	2'11"	8'2"	6'6"	4'6"	2'4"	1'10"	8'-6"	.315

NOTE: SPECIFIED REINFORCING IS MINIMAL AND MAY BE INCREASED AT PRODUCERS OPTION TO AID CASTING & HANDLING. ALTERNATE REINFORCEMENT PERMITTED IF APPROVED.

* NOTE: "C" AND "L" DIMENSION MAY BE MEASURED TO EITHER END OF JOINT CONNECTION AT PIPE.

METAL FLARED END SECTION

(USE ONLY WITH COR. METAL PIPE)

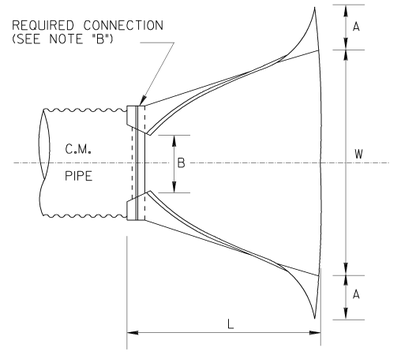

PLAN

NOTE: GALVANIZED STEEL FLARED END SECTIONS ARE TO BE USED ONLY WITH CORRUGATED STEEL PIPE AND ALUMINUM FLARED END SECTIONS ARE TO BE USED ONLY WITH CORRUGATED ALUMINUM PIPE UNLESS OTHERWISE APPROVED BY D.O.T. OFFICE OF MATERIALS AND TESTS.

FLARED END SECTION DIMENSIONS

PIPE SIZE "D"	THICKNESS GALV. STEEL	THICKNESS ALUM.	A A= 0.4D +- 1"	B B=0.5 D +- 1"	H H=0.25D +- 1" (MIN.6")	L L=1.67D +- 1 1/2'	W W=2.0D +- 2"
12"	.064"	.060"	5"	6'	6"	1'8	2'0"
15"	.064"	.060"	6"	7"	6"	2'3"	2'6"
18"	.064"	.060"	7"	9"	6"	2'6"	3'0"
24"	.064"	.060"	9"	1'0"	6"	3'4"	4'0"
30"	.079"	.105"	1'0"	1'3"	7"	4'2"	5'0"
36"	.079"	.105"	1'2"	1'6"	9"	5'0"	6'0"
42"	.109"	.164"	1'5"	1'9"	10"	5'10"	7'0"

NOTE: WHERE METAL FLARED END SECTIONS ARE USED WITH MULTIPLE PIPE LINES, THE STANDARD SPACING BETWEEN PIPES (S=D OR 3 FT.) MAY HAVE TO BE INCREASED (S=1.75 D TYPICAL). TO PREVENT OVER-LAP OF END SECTION WINGTIPS. SEE ALSO STD. 1030D.

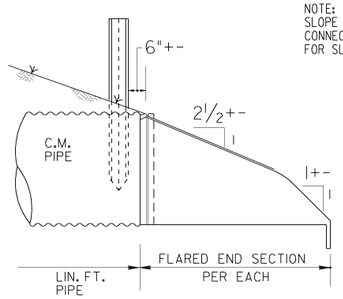

NOTE:
SLOPE DRAIN PIPES WILL REQUIRE AN ELBOW FOR CONNECTION TO THE FLARED END SECTION. PAYMENT FOR SLOPE DRAIN PIPE WILL INCLUDE THIS ELBOW.

SIDE

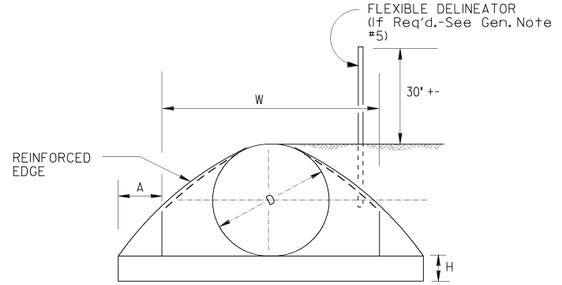

FRONT

NOTE "B":

THE CONNECTION BETWEEN METAL FLARED END SECTION AND C.M. PIPE WILL BE ONE OF THE FOLLOWING:

(a) A STRAP BAND OR THREADED ROD PROVIDED BY THE MANUFACTURER WILL LOCK END SECTION ONTO PIPE. A CORRUGATION AT THE PIPE AND WILL BE NON-SPIRALED (PERPENDICULAR TO CL OF PIPE)

(b) A DIMPLE BAND COLLAR WILL BE SHOP BOLTED TO END SECTION. PIPE WILL BE INSERTED INTO BAND COLLAR TO MEET THE END SECTION.

(c) A STUB PIPE WILL BE RIVITED TO THE END SECTION AND THE MAIN PIPE CONNECTED TO THE STUB WITH A NORMAL CONNECTING BAND.

(d) OTHER TYPE CONNECTION IF RECOMMENDED BY MANUFACTURER AND APPROVED BY THE D.O.T.

SPECIAL NOTE:

FLARED END SECTIONS ARE NORMALLY LIMITED TO USE OUTSIDE THE CLEAR ZONE OR BEHIND BARRIER AND WHERE HYDRAULICS PERMIT. SEE OTHER STANDARDS OR DETAILS FOR TAPERED HEADWALLS, SAFETY SLOPE END SECTIONS OR OTHER PIPE END STRUCTURES.

GENERAL NOTES :

1. TOEWALLS ARE REQ'D. FOR OUTLETS OF CONC. STORM DRAINS, EXCEPT WHERE DITCH PAVING OR OTHER EROSION PROTECTION IS PROVIDED OR WHERE THE OUTLET VELOCITY IS LESS THAN 8 FT/SEC. TOEWALLS ARE NOT REQUIRED FOR SIDE DRAINS, SLOPE DRAINS OR INLETS OF STORM DRAINS THIS CRITERIA MAY BE VARIED WHERE SPECIFIED BY THE DESIGNER OR THE ENGINEER.

2. TOEWALLS WILL BE PAID FOR AS CU. YDS. OF CLASS "A" OR "B" CONCRETE. CONTRACTOR MAY ELECT TO CONSTRUCT TOE WALL WITH SAND CEMENT BAG RIPRAP OR STONE RIPRAP TO SAME MINIMUM DIMENSIONS WITH NO ADDITIONAL PAYMENT.

3. PRECAST TOEWALLS SHALL BE CL. "A" CONCRETE; CAST-IN-PLACE TOEWALLS MAY BE CL "A" OR "B" CONCRETE AND MAY BE TRENCH FORMED. WHERE PLANS ITEMIZE ONE CLASS OF CONCRETE AND CONTRACTOR ELECTS TO USE OTHER CLASS, NO ADDITIONAL PAYMENT IS MADE. NO PAYMENT IS MADE FOR STEEL IN TOEWALL.

4. CENTERLINE OF FLARED END SECTION WILL ALIGN WITH CENTERLINE OF PIPE, IF PIPE IS SKEWED, THE EMBANKMENT SLOPE WILL BE WARPED TO CONFORM WITH END SECTION.

5. FLEXIBLE DELINEATORS SHALL BE REQUIRED AT CROSS DRAIN FLARED END SECTIONS, BOTH INLET AND OUTLET. PAY-MENT FOR FLARED END SECTION WILL INCLUDE DELINEATORS, SEE DETAIL AND NOTES BELOW. DELINEATORS NOT REQ'D. FOR SIDE DRAIN, SLOPE DRAIN, OR LONG PIPE.

1" X 12" LONG YELLOW REFLECTIVE SHEETING TYPE IX, ON EACH SIDE OF RIDGE.

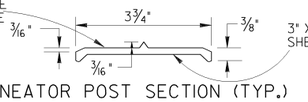

3" X 12" LONG YELLOW REFLECTIVE SHEETING TYPE IX.

DELINEATOR POST SECTION (TYP.)

NOTE:
DELINEATOR POST SHALL CONFORM TO SEC. 911 FOR FLEXIBLE DELINEATOR POST EXCEPT REFLECTIVE SHEETING IS NOT REQUIRED AND LENGTH IS 4'-6" FROM TOP TO BOTTOM POINT. ALTERNATES PERMITTED IF APPROVED BY D.O.T. LABORATORY.

SPECIAL NOTE :

PIPE SIZES (D) ARE "NOMINAL-MINIMUM" INSIDE DIAMETERS IN ACCORDANCE WITH GEORGIA STANDARD FOR PIPE CULVERTS. "D" DIMENSION FOR FLARED END SECTION SHALL EQUAL THE "D" DIMENSION FOR CONNECTING PIPE CULVERT.

REVISION	BY	DATE
REV. REFLECTIVE SHEETING	GLO	6-9-06

DEPARTMENT OF TRANSPORTATION
STATE OF GEORGIA

STANDARD
FLARED END SECTIONS
FOR PIPES

NO SCALE — REV. & REDR. SEPT., 1999

DES. ____ REV. ____ RETR. ____ CHK. ____

(SUBMITTED) STATE ROAD & AIRPORT DESIGN ENGINEER

(APPROVED) CHIEF ENGINEER

NUMBER 1120

ALTERNATE I

GDOT Georgia Department of Transportation | P. I. No.

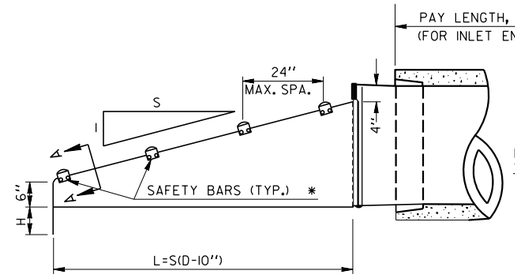

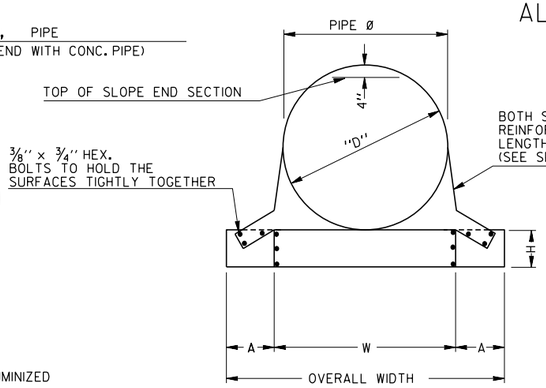

* NUMBER OF BARS REQUIRED WILL VARY DEPENDING ON THE LENGTH OF THE END SECTION. SPACINGS BETWEEN CENTERS OF BARS SHALL NOT EXCEED 24 INCHES.

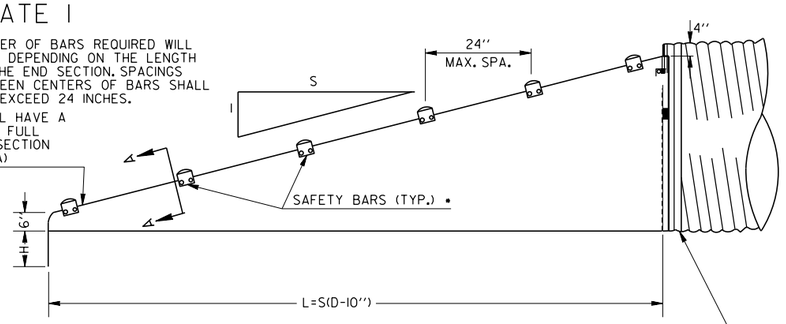

SIDE ELEVATION

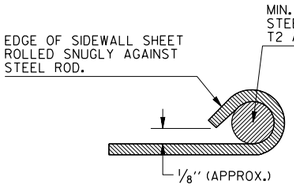

SECTION A-A

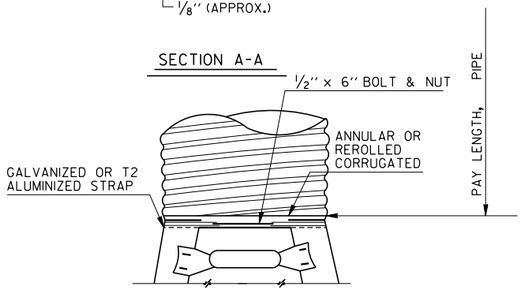

FRONT VIEW

NOTE:
PAYMENT FOR SAFETY END SECTION SHALL INCLUDE TAPERED SLEEVE

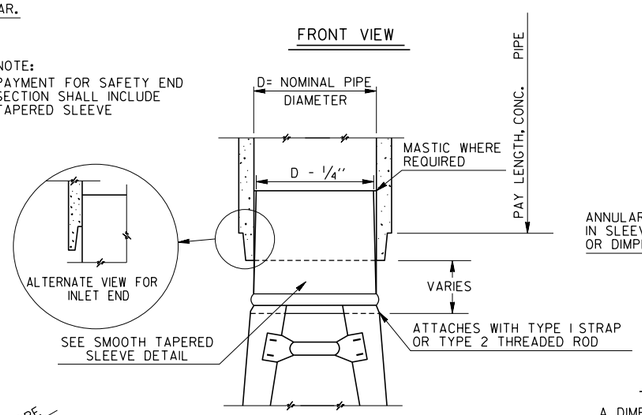

SIDE ELEVATION

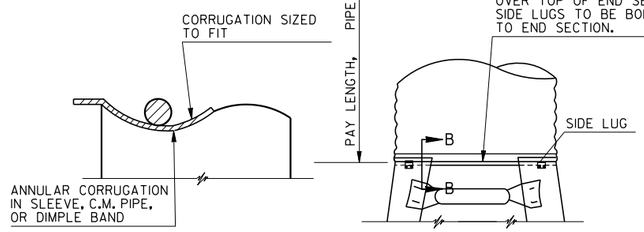

SECTION B-B

TYPE #2 CONNECTOR DETAILS
FOR 30" AND LARGER

TYPE 3 ALTERNATE CONNECTOR (NOT SHOWN)
A DIMPLE BAND COLLAR MAY BE SHOP BOLTED TO THE END SECTION

GENERAL NOTES
ALTERNATE I

GALVANIZED OR T2 ALUMINIZED STEEL SHEET
USE GALVANIZED STEEL SHEET CONFORMING TO AASHTO M 218 OR T2 ALUMINIZED STEEL SHEET CONFORMING TO AASHTO M 274.

CONNECTORS
PAYMENT FOR END SECTION SHALL INCLUDE CONNECTION OF THE TYPE REQUIRED FOR THE SIDE DRAIN USED.

SAFETY BARS
SHALL BE 3" SCHEDULE 40 GALVANIZED OR T2 ALUMINIZED STEEL PIPE. PIPE TO BE GALVANIZED OR T2 ALUMINIZED AFTER FORMING. SAFETY BAR(S) SHALL BE REQUIRED FOR ALL SAFETY END SECTIONS.

MISCELLANEOUS DETAILS
DETAILS OF CONSTRUCTION MATERIALS AND WORKMANSHIP NOT SHOWN ON THIS DRAWING SHALL CONFORM TO THE MANUFACTURER'S REQUIREMENTS, SUBJECT TO APPROVAL BY THE D.O.T.'S LABORATORY. A SAMPLE MUST BE SUBMITTED TO PRE-QUALIFY THE PRODUCT.

ALL METAL SAFETY END SECTION COMPONENTS, INCLUDING STEEL SHEET, SAFETY BARS, SLEEVES, AND STRAPS OR CONNECTING BANDS, SHALL BE MADE OF THE SAME BASE MATERIAL AND COATING; AND, IF CONNECTING TO CORRUGATED METAL PIPE, SHALL BE MADE OF THE SAME BASE MATERIAL AND COATING AS THE PIPE.

SIZES, DIMENSIONS, AND THICKNESSES

PIPE Ø (IN.)	MIN. THICK.		DIMENSIONS (INCHES)				✳ L DIMENSION			
	IN.	GAGE	A	H	W (D+6")	OVERALL WIDTH	SLOPE (S:1)	LENGTH (IN.)	SLOPE (S:1)	LENGTH (IN.)
15	.064	16	8	6	21	37	4:1	20	6:1	30
18	.064	16	8	6	24	40	4:1	32	6:1	48
24	.064	16	8	6	30	43	4:1	56	6:1	84
30	.109	12	12	9	36	60	4:1	80	6:1	120
36	.109	12	12	9	42	66	4:1	104	6:1	156
42	.109	12	16	12	48	80	4:1	128	6:1	192
48	.109	12	16	12	54	86	4:1	152	6:1	228

*SEE STD. NO. 903IT FOR SLOPES AT SIDE ROAD OR AT DRIVES.

SPECIAL NOTE:

WHERE THE LENGTH OF DITCH OR THE DISTANCE BETWEEN TOE POINTS OF END SECTIONS ON SEPARATE INSTALLATIONS WOULD BE LESS THAN 30 FT., CONTINUED S.D. PIPE WITH AN INTERMEDIATE INLET OR OTHER ALTERNATE MAY BE SPECIFIED INSTEAD.

TYPE #1 CONNECTOR DETAIL
THRU 24"

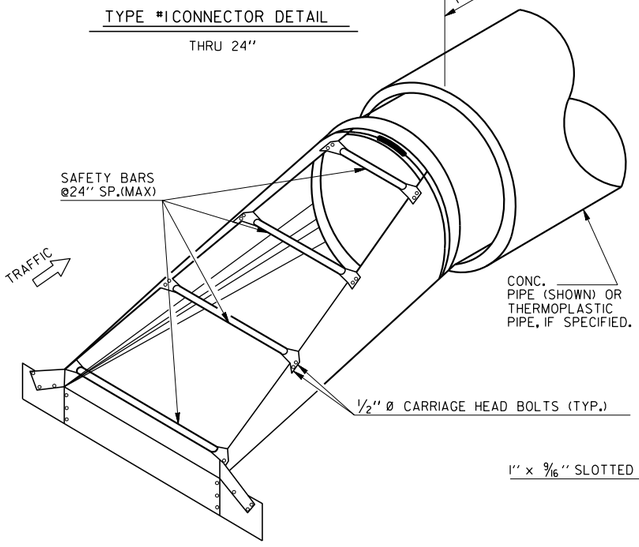

TYPICAL PICTORAL VIEW
(WITH CONCRETE PIPE)

TAPERED SLEEVE FOR ATTACHING STEEL END SECTIONS TO SMOOTH PIPE

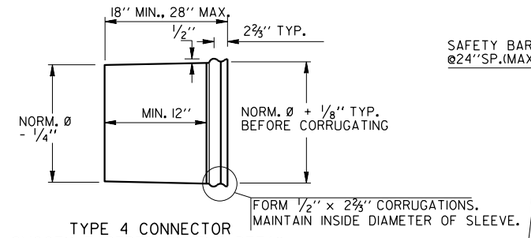

TYPE 4 CONNECTOR
SMOOTH TAPERED SLEEVE DETAIL

NOTE: METAL TO BE 12 GAGE, SMOOTH GALVANIZED IN ACCORDANCE WITH AASHTO M 218 COATED, OR T2 ALUMINIZED IN ACCORDANCE WITH AASHTO M 274 COATED AS REQUIRED FOR END SECTION.

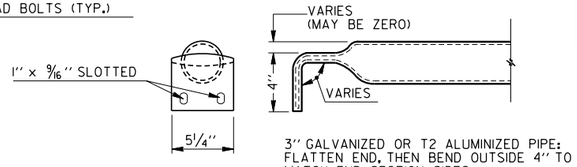

3" GALVANIZED OR T2 ALUMINIZED PIPE: FLATTEN END, THEN BEND OUTSIDE 4" TO MATCH END SECTION SIDES.

TYPICAL DETAIL OF SAFETY BARS

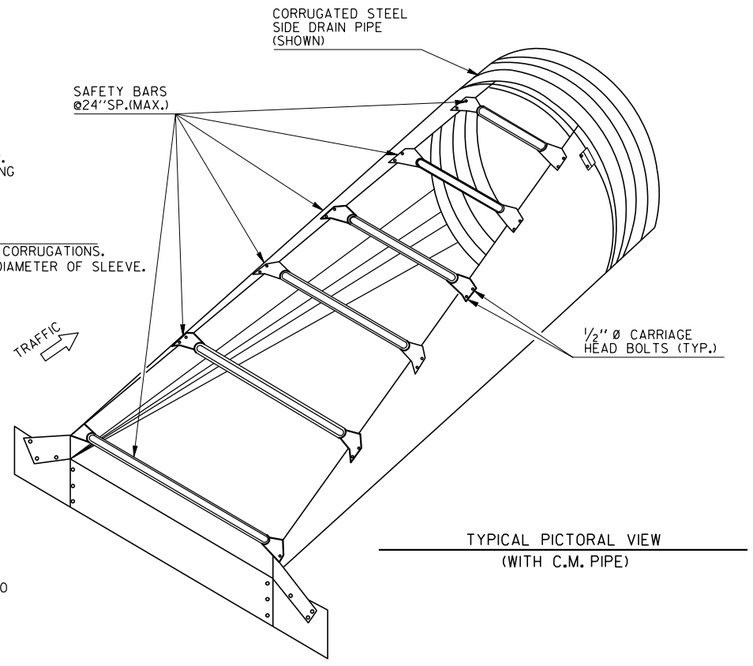

TYPICAL PICTORAL VIEW
(WITH C.M. PIPE)

REVISION	BY	DATE
ADDED T2 ALUMINIZED ALT.	J.A.H.R.	07-01-26
REV. PE TO THERMOPLASTIC		
REVISED GENERAL NOTES	G.L.O.	1-28-05
CONVERTED TO STANDARD		
PAY ITEM REVISION	R.M.U.	12-14-94
SEE PREVIOUS VERSIONS	- - -	--/--/--

DEPARTMENT OF TRANSPORTATION
STATE OF GEORGIA

STANDARD SAFETY END SECTION (METAL)

(FOR SIDE DRAIN PIPE-OR FOR STORM DRAIN PIPE PARALLEL TO MAINLINE)

ALTERNATE I

NO SCALE | SEPT., 1993

DES. ____ DRW. ____ TRA. ____ CHK. ____

(SUBMITTED) Daniel C. Pass — STATE DESIGN POLICY ENGINEER

(APPROVED) Maynard S. Purvis — CHIEF ENGINEER

NUMBER 1122

SHEET 1 OF 3

GDOT Georgia Department of Transportation | P. I. No.

ALTERNATE 2

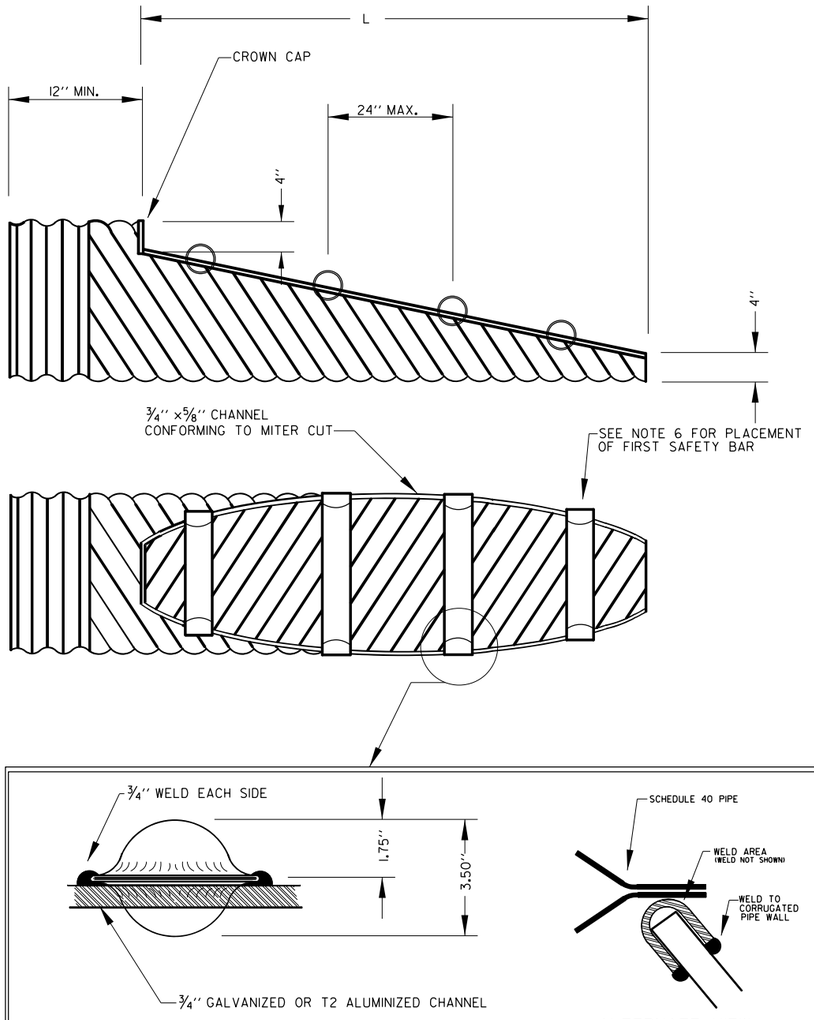

END TREATMENT DIMENSIONS FOR ARCHED METAL PIPE				
PIPE Ø (INCHES)	GAGE	SHEET THICKNESS (INCHES)	*4:1 SLOPE L DIMENSION	*6:1 SLOPE L DIMENSION
17''x13''	16	.064''	1'-8''	2'-6''
21''x15''	16	.064''	2'-4''	3'-6''
24''x18''	16	.064''	3'-4''	5'-0''
28''x20''	16	.064''	4'-0''	6'-0''
35''x24''	14	.079''	5'-4''	8'-0''
42''x29''	14	.079''	7'-0''	10'-6''
49''x33''	14	.079''	8'-4''	12'-6''
57''x38''	12	.109''	10'-0''	15'-0''
64''x43''	12	.109''	11'-8''	17'-6''
71''x47''	10	.138''	13'-0''	19'-6''

• SEE STD. NO. 903IT FOR SLOPES AT SIDE ROAD OR AT DRIVES.

END TREATMENT DIMENSIONS FOR CIRCULAR METAL AND CIRCULAR CONCRETE PIPES				
PIPE Ø (INCHES)	GAGE	SHEET THICKNESS (INCHES)	*4:1 SLOPE L DIMENSION	*6:1 SLOPE L DIMENSION
15''	16	.064''	2'-4''	3'-6''
18''	16	.064''	3'-4''	5'-0''
21''	16	.064''	4'-4''	6'-6''
24''	16	.064''	5'-4''	8'-0''
30''	16	.064''	7'-4''	11-0''
36''	16	.064''	9'-4''	14'-0''
42''	14	.079''	11'-4''	17'-0''
48''	14	.079''	13'-4''	20'-0''
54''	14	.079''	15'-4''	23'-0''
60''	12	.109''	17'-4''	26'-0''

• SEE STD. NO. 903IT FOR SLOPES AT SIDE ROAD OR AT DRIVES.

GENERAL NOTE ALTERNATE 2:

1. THE MATERIAL USED IN FABRICATION OF SLOPED END SECTION SHALL CONFORM TO THE APPLICABLE REQUIREMENTS OF AASHTO M 218 (GALVANIZED STEEL) OR AASHTO M 274 (T2 ALUMINIZED STEEL).
2. SLOPED END SECTIONS SHALL BE FORMED FROM FULL CIRCLE PIPE, MAY BE FORMED INTO PIPE ARCHES, WHERE SPECIFIED, AND SHALL MEET ALL REQUIREMENTS FOR CORRUGATION, GAGE, AND OTHER FABRICATION REQUIREMENTS.
3. THE EXPOSED EDGE CUT ON THE TOP SHALL BE COVERED WITH A PROTECTIVE CAP OVERLAPPING THE TOP OF THE ARCH BY NOT LESS THAN ⅝INCH. THE 4 TO 1 OR 6 TO 1 BEVEL SHALL BE ENCASED WITH A PROTECTIVE CAP OVERLAPPING EACH SIDE OF THE CUT BY NOT LESS THAN ⅝INCH. THE PROTECTIVE CAP IS TO BE THE SAME MATERIAL AS THE PIPE AND MINIMUM 14 GAGE (.079''). PROTECTIVE CAPS SHALL BE WELDED WITH ½INCH WELDS ALTERNATING FROM SIDE TO SIDE OF THE CAP AT 12 INCH INTERVALS. WELDS SHALL BE AT THE ENDS OF ALL CAPS, REGARDLESS OF SPACING. REPAIR DAMAGED GALVANIZED COATINGS IN ACCORDANCE WITH GDOT STANDARD SPECIFICATIONS SECTION 645.
4. ALL METAL SAFETY END SECTION COMPONENTS, INCLUDING STEEL SHEET, SAFETY BARS, SLEEVES, AND STRAPS OR CONNECTING BANDS, SHALL BE MADE OF THE SAME BASE METAL AND COATING; AND, IF CONNECTING TO CORRUGATED METAL PIPE, SHALL BE MADE OF THE SAME BASE MATERIAL AND COATING AS THE PIPE.
5. ADAPTER SLEEVE IS TO BE CONSTRUCTED OF GALVANIZED STEEL CONFORMING TO THE REQUIREMENTS OF AASHTO M 218, OR T2 ALUMINIZED STEEL CONFORMING TO THE REQUIREMENTS OF AASHTO M 274, MINIMUM 12 GAGE (.109'') MATERIAL.
6. BOTTOM SAFETY BAR SHALL HAVE A MAXIMUM CLEARANCE OF 5'' WHEN MEASURED FROM THE BOTTOM OF THE INSTALLED BAR TO INSIDE CREST OF PIPE CORRUGATION.

NOTE: ENDS OF BARS SHALL BE WELDED SOLID TO PREVENT SOIL AND WATER INFILTRATION

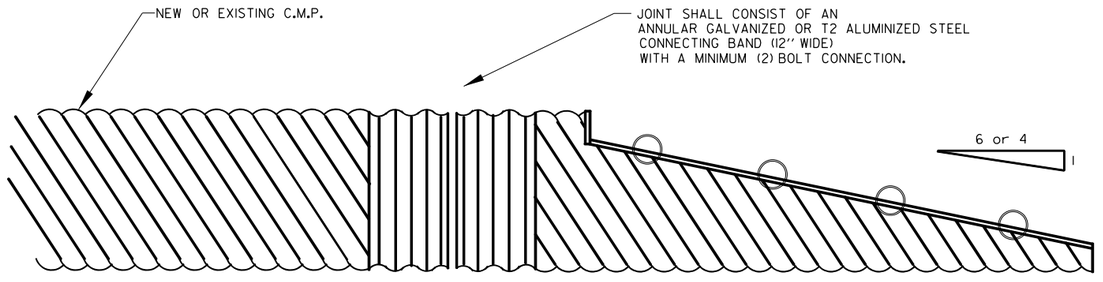

SPECIAL NOTE:

WHERE THE LENGTH OF DITCH OR THE DISTANCE BETWEEN TOE POINTS OF THE END SECTION ON SEPARATE INSTALLATIONS WOULD BE LESS THAN 30 FT., CONTINUED S.D. PIPE WITH AN INTERMEDIATE INLET OR OTHER ALTERNATE MAY BE SPECIFIED INSTEAD.

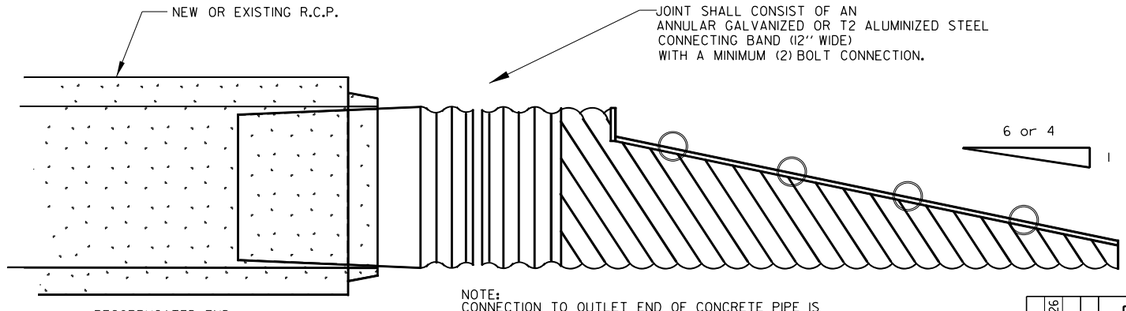

NOTE:
CONNECTION TO OUTLET END OF CONCRETE PIPE IS ILLUSTRATED. CONNECTION TO INLET END WILL BE PERFORMED IN THE SAME MANNER.

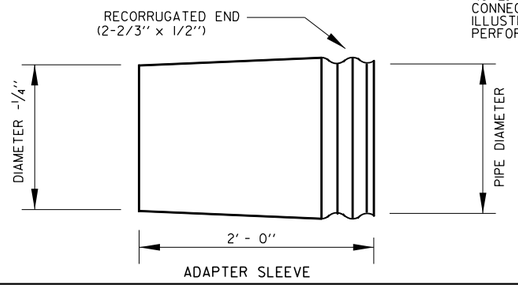

ADAPTER SLEEVE

DATE	REVISION	BY
07-01-26	ADDED T2 ALUMINIZED ALT.	J.A.H.R.
	REV. 3'' SCH. 40 PIPE COATING	

DEPARTMENT OF TRANSPORTATION
STATE OF GEORGIA

STANDARD SAFETY END SECTION (METAL)

(FOR SIDE DRAIN PIPE-OR FOR STORM DRAIN PIPE PARALLEL TO MAINLINE)

ALTERNATE 2

NO SCALE | JAN. 2005

DESIGNED ____ DRAWN ____ TRACED ____ CHECKED ____

(SUBMITTED) Daniel C. Lau — STATE DESIGN POLICY ENGINEER

(APPROVED) Marcus B. Purdue — CHIEF ENGINEER

NUMBER 1122

STATE	PROJECT NUMBER	SHEET NO.	TOTAL SHEETS
GA.			

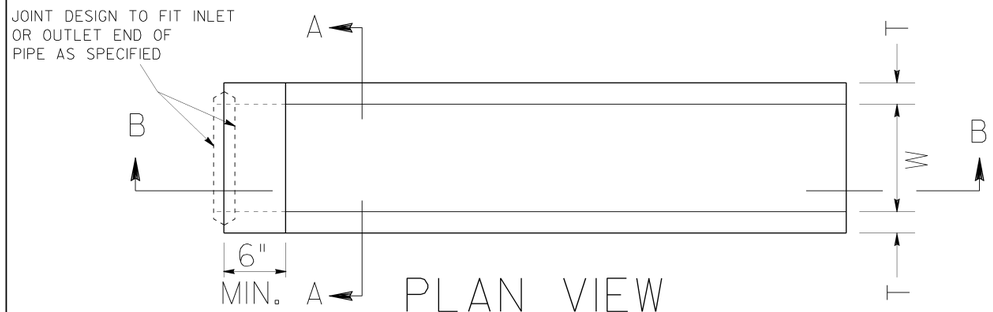

PLAN VIEW

(BAR GRATE NOT SHOWN)

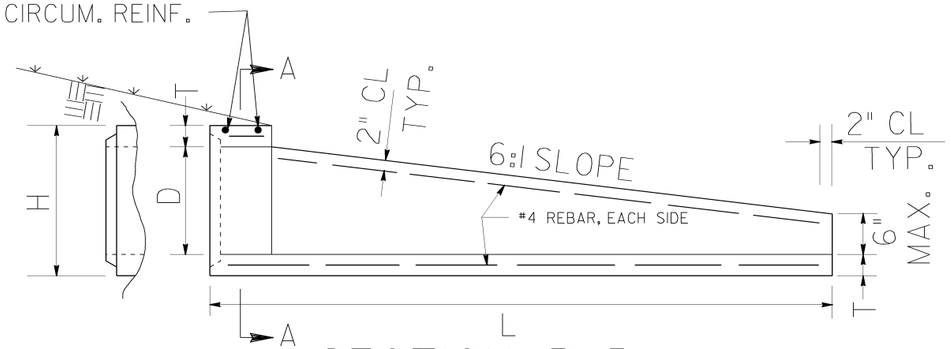

SECTION B-B

ALTERNATE 3

PIPE DIA	T (MIN)	D	H	L
15"	3"	15"	21"	4'-6"
18"	3"	18"	24"	6'-0"
24"	3"	24"	30"	9'-0"
30"	4"	30"	38"	12'-6"
36"	4"	36"	44"	15'-6"
42"	4"	42"	50"	18'-6"
48"	5"	48"	58"	22'-0"

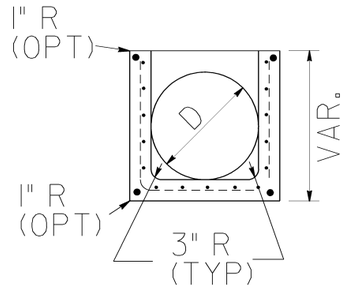

SECTION A-A

GENERAL NOTES:

1. CONCRETE STRENGTH SHALL BE 4000 PSI MINIMUM
2. REINFORCING SHALL BE PER AASHTO M170, CLASS II REINFORCED CONCRETE PIPE, PLUS ONE #4 BAR TOP AND BOTTOM, EACH SIDE.
3. WALLS MAY HAVE 1/4" TAPER. WALL THICKNESSES SHOWN ARE THE MINIMUM.
4. LIFT HOLES MAY BE PROVIDED IN THE SIDE WALLS FOR HANDLING.
5. END SECTION JOINT WILL BE A MATCHED FIT TO THE ADJOINING PIPE JOINT AT ALL INLET AND OUTLET ENDS. NON-FITTING JOINTS WILL REQUIRE A BUILT-IN-PLACE REINFORCED COLLAR CONNECTION WITH NO ADDITIONAL PAYMENT.
6. ALL END SECTIONS FOR PIPES WITH "D" OVER 24" ON SINGLE LINES WILL HAVE GALV. SAFETY BARS, SPACED NOT MORE THAN 24" ON CENTERS, AND INSTALLED PERPENDICULAR TO THE MAINLINE TRAFFIC FLOW. ALL END SECTIONS FOR MULTIPLE LINE PIPES WILL HAVE GRATES.
7. TYPICAL USE OF SAFETY END SECTIONS IS AT THE ENDS OF PIPES UNDER DRIVEWAYS OR SIDEROADS WHERE THE PIPE CULVERT IS PARALLEL TO THE MAINLINE AND FALLS INSIDE THE MAINLINE CLEAR ZONE WIDTH.

D	(MIN) GRATE LENGTH	GRATE WIDTH (TYP) #
15"	2'-4"	1'-9 5/8"
18"	2'-4"	2'-0 5/8"
24"	6'-4"	2'-6 5/8"
30"	8'-6"	3'-2 5/8"
36"	12'-4"	3'-8 5/8"
42"	14'-6"	4'-2 5/8"
48"	18'-4"	4'-10 5/8"

TYPICAL GRATE WIDTHS SHOWN ARE MEASURED FROM INSIDE TO INSIDE OF THE 3/8" THICK ANGLE IRON. GRATE FIT WITH END SECTION SHALL BE CHECKED BEFORE DELIVERY.

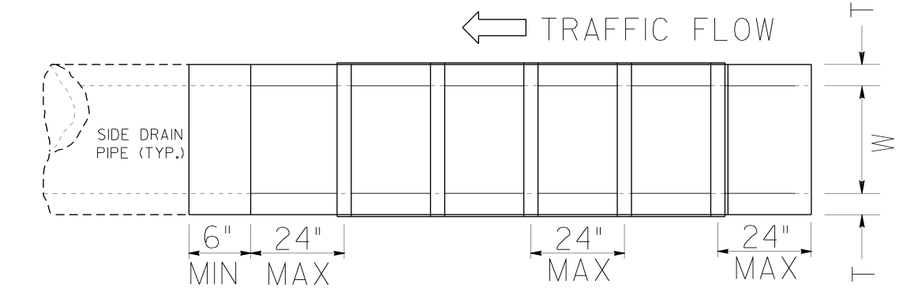

PLAN VIEW

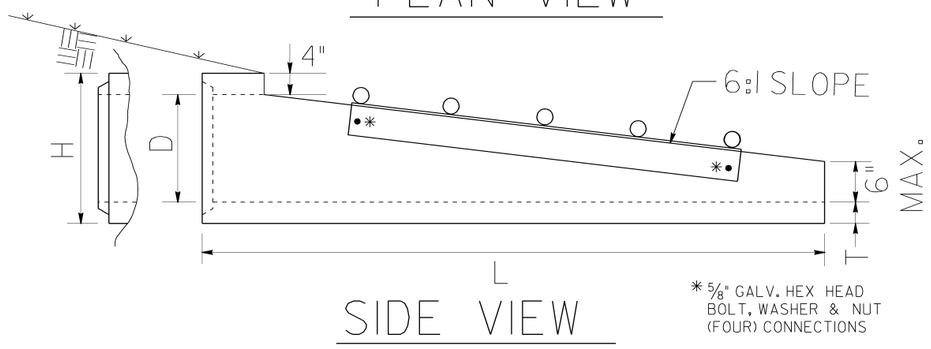

SIDE VIEW

* 5/8" GALV. HEX HEAD BOLT, WASHER & NUT (FOUR) CONNECTIONS

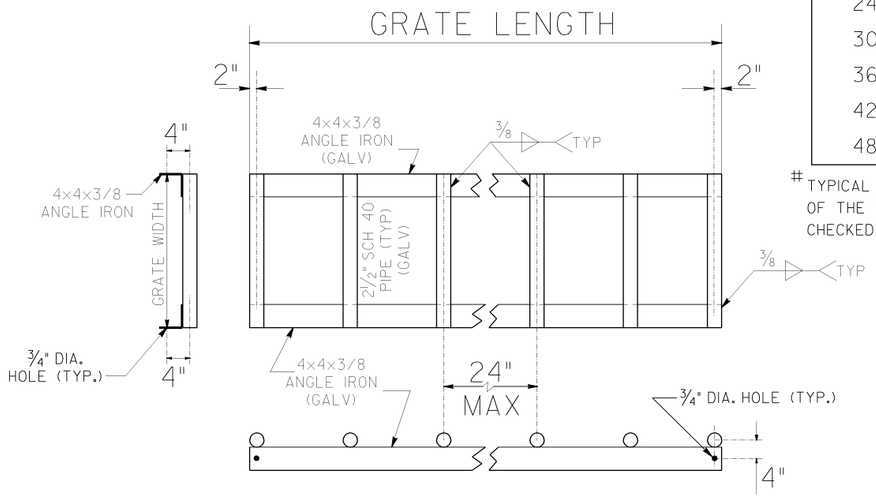

GALVANIZED SAFETY GRATE DETAIL

DATE	REVISION	BY
1-28-05	REVISED TO 1122 PAGE 3	G.L.O.

DEPARTMENT OF TRANSPORTATION
STATE OF GEORGIA

STANDARD
SAFETY END SECTION
(CONCRETE)
(FOR SIDE DRAIN PIPE-OR FOR STORM DRAIN PIPE PARALLEL TO MAINLINE)
ALTERNATE 3

NO SCALE — OCT., 2000

DESIGNED ____ DRAWN ____ TRACED ____ CHECKED ____

(SUBMITTED) STATE ROAD & AIRPORT DESIGN ENGINEER

(APPROVED) CHIEF ENGINEER

NUMBER 1122

SHEET 3 OF 3

STATE	PROJECT NUMBER	SHEET NO.	TOTAL SHEETS
GA.			

OUTLET HEADWALL

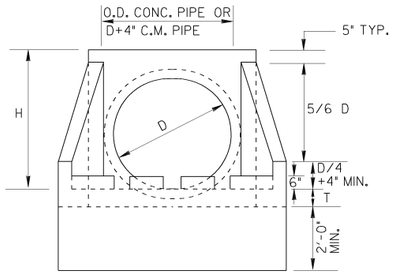

FRONT ELEVATION

INLET HEADWALL

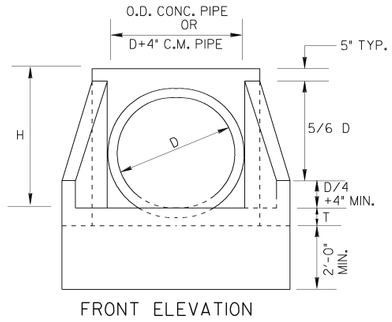

FRONT ELEVATION

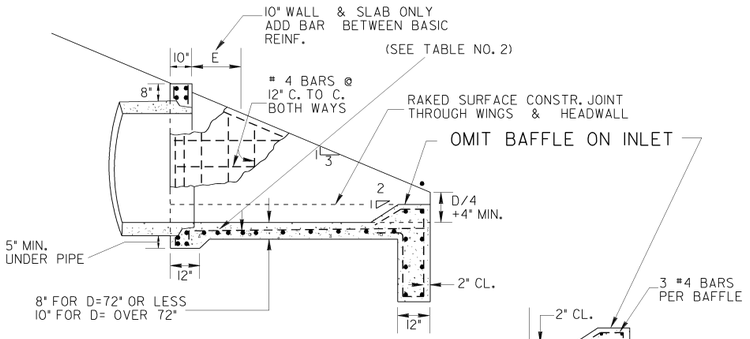

SECTION A-A

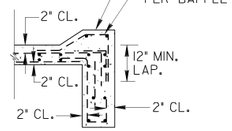

10" SLAB

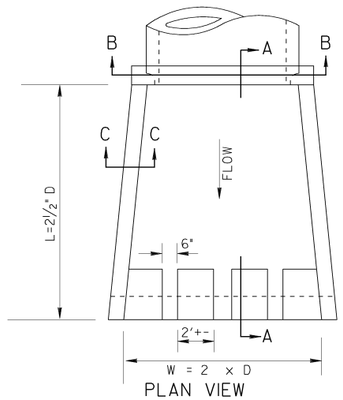

PLAN VIEW

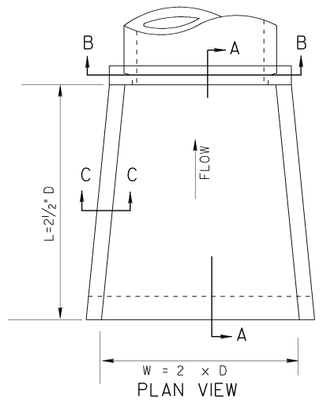

PLAN VIEW

D = INSIDE DIAMETER OF PIPE

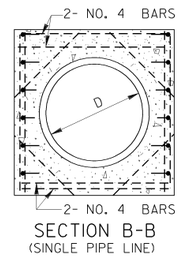

SECTION B-B
(SINGLE PIPE LINE)

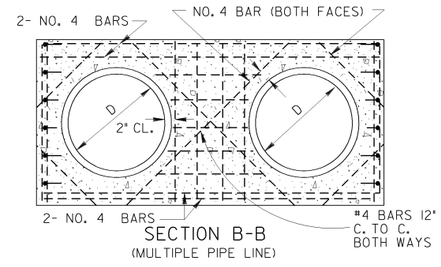

SECTION B-B
(MULTIPLE PIPE LINE)

TABLE NO. 1- QUANTITIES FOR HEADWALLS

D	CU. YDS. CONCRETE (PAY QUANTITIES) FOR SINGLE LINE INLET	FOR SINGLE LINE OUTLET	ADD FOR ADD'L LINE INLET	ADD FOR ADD'L LINE OUTLET	LBS. STEEL (GIVEN FOR INFORMATION ONLY) FOR SINGLE LINE INLET	FOR SINGLE LINE OUTLET	ADD FOR EACH ADD'L LINE INLET	ADD FOR EACH ADD'L LINE OUTLET
15"	0.87	0.93	0.60	0.66	102	113	73	83
18"	1.10	1.16	0.85	0.93	106	117	93	104
24"	1.61	1.69	1.29	1.37	127	138	124	134
30"	2.21	2.32	1.83	1.96	170	180	154	164
36"	2.92	3.05	2.49	2.63	238	254	196	212
42"	3.73	3.87	3.00	3.17	290	306	231	247
48"	4.62	4.80	3.58	3.74	335	351	265	281
54"	5.63	5.83	4.17	4.38	407	428	319	340
60"	6.72	6.95	4.82	5.01	456	477	360	391
72"	9.22	9.48	6.24	6.46	623	649	475	494
84"	14.84	15.19	9.05	9.29	1517	1539	1017	1044
96"	18.88	19.27	11.13	11.41	2118	2150	1323	1350

*NOTE:
QUANTITIES SHOWN WILL BE ACTUAL PAY QUANTITIES FOR CLASS "A" CONCRETE, INCLUDING REINFORCED STEEL. NO ADJUSTMENT WILL BE MADE FOR AS BUILT QUANTITIES.

D - INSIDE DIAMETER OF PIPE CULVERT

H = D + 10" MIN. FOR C.M. PIPE

H = D + PIPE WALL THICKNESS + 8" FOR CONC. PIPE
(13/12 D + 9" TYP.)

T = 8" FOR D = 72" OR LESS
T = 10" FOR D = OVER 72"

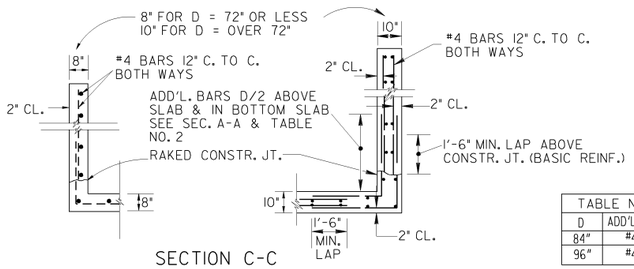

SECTION C-C

TABLE NO. 2		
D	ADD'L.BAR	E
84"	#4	5'
96"	#4	8'

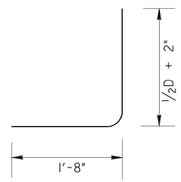

ADDITIONAL BAR DETAIL

DEPARTMENT OF TRANSPORTATION
STATE OF GEORGIA

STANDARD
TAPERED
INLET HEADWALL - OUTLET HEADWALL
(BUILT-IN-PLACE)

NO SCALE — REV. & REDR. OCT., 1999

DATE | REVISION | BY

DES. ____ DRW. ____ TRA. ____ CHK. ____

(SUBMITTED) STATE ROAD & AIRPORT DESIGN ENGR.

(APPROVED) CHIEF ENGINEER

NUMBER 1125

STATE	PROJECT NUMBER	SHEET NO.	TOTAL SHEETS
GA.			

STORM DRAIN AND UTILITY INSTALLATION BY OPEN CUT - GENERAL

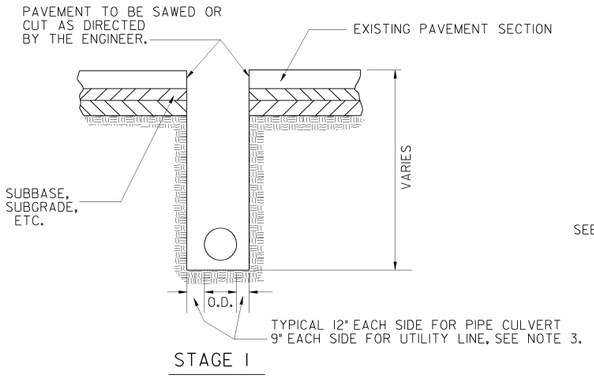

STAGE 1

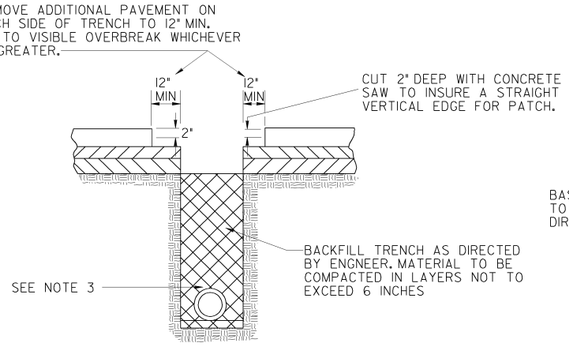

STAGE 2

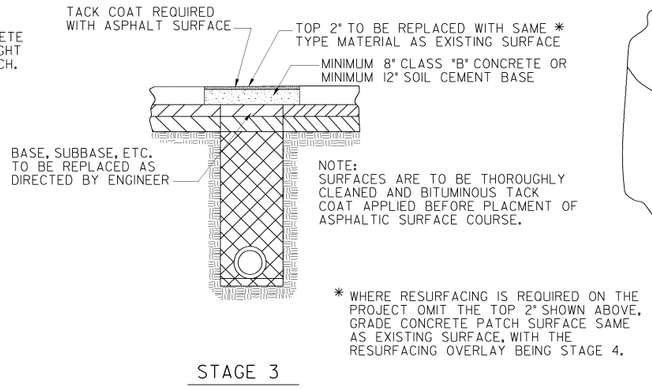

STAGE 3

* WHERE RESURFACING IS REQUIRED ON THE PROJECT OMIT THE TOP 2" SHOWN ABOVE, GRADE CONCRETE PATCH SURFACE SAME AS EXISTING SURFACE, WITH THE RESURFACING OVERLAY BEING STAGE 4.

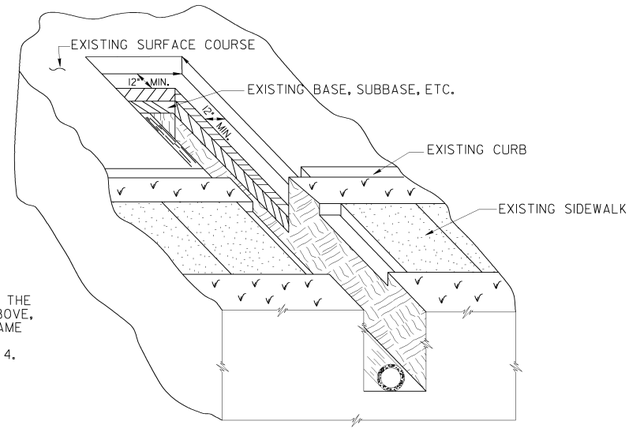

STORM DRAIN AND UTILITY INSTALLATION BY OPEN CUT ACROSS P.C. CONCRETE PAVING

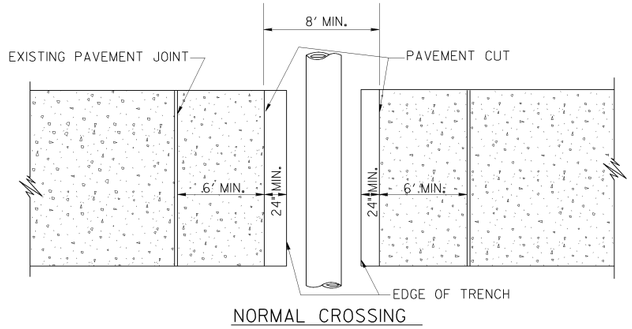

NORMAL CROSSING

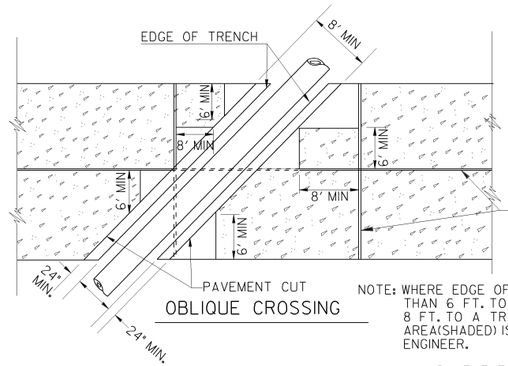

OBLIQUE CROSSING

NOTE: WHERE EDGE OF CUT IN RIGID PAVEMENT IS CLOSER THAN 6 FT. TO A LONGITUDINAL JOINT, OR CLOSER THAN 8 FT. TO A TRANSVERSE JOINT, ALL PAVEMENT IN THAT AREA (SHADED) IS TO BE REPLACED AS DIRECTED BY THE ENGINEER.

ALL PAVEMENT JOINTS ARE TO BE RE-ESTABLISHED.

DOWELS AND TIE-BARS ARE TO BE REPLACED.

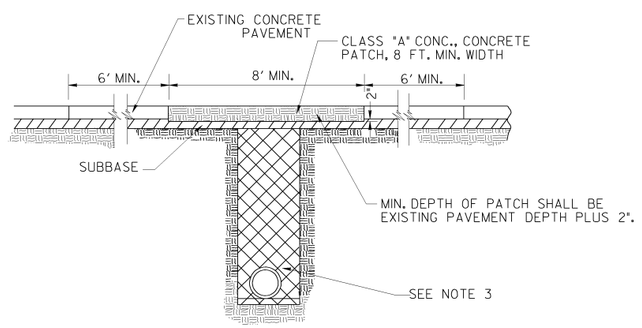

NOTE:
WHEN THE CONCRETE IS POURED, IT SHALL BE STRUCK OFF AT AN ELEVATION SLIGHTLY HIGHER THAN THE INTENDED SURFACE AND TAMPED TO OFFSET SHRINKAGE. MECHANICAL VIBRATING EQUIPMENT SHALL BE USED TO CONSOLIDATE THE PLACED CONCRETE, ESPECIALLY AT THE EDGES AND AROUND THE STEEL AT JOINTS. THE CONCRETE SHALL THEN BE TAMPED A SECOND TIME, THEN SCREEDED AND CHECKED WITH A STRAIGHT EDGE TO GIVE THE SAME SURFACE GRADE AS THE EXISTING PAVMENT.

GENERAL NOTES:

1. SPECIFICATIONS: GEORGIA STANDARD, CURRENT EDITION & SUPPLEMENTS THERETO.

2. (a) OTHER PAVEMENT REPLACEMENT MATERIALS, SUCH AS HIGH EARLY STRENGTH CONCRETE, MAY BE SUBSTITUTED FOR MATERIALS SHOWN WHEN CALLED FOR IN THE PLANS OR BY THE ENGINEER.
   (b) PAYMENT FOR PIPE CULVERT OR UTILITY SHALL INCLUDE SAWING AND/OR CUTTING AND REMOVING EXISTING PAVEMENT AND REPLACING THE PAVEMENT AS SPECIFIED. PAYMENT FOR PIPE OR UTILITY INCLUDES THIS PAVEMENT REPLACEMENT MATERIAL. REGARDLESS OF WHERE MATERIALS SHOWN ARE USED OR WHERE OTHER MATERIALS SUCH AS HIGH EARLY STRENGTH CONCRETE ARE USED.
   (c) PAYMENT FOR PIPE CULVERT OR UTILITY INSTALLATION SHALL INCLUDE REPLACING IN KIND ANY PORTIONS OF SIDEWALK, CURB, CURB & GUTTER, MEDIAN PAVING, DRIVEWAYS, ETC., WHICH ARE DISTURBED DUE TO THE INSTALLATION.

3. TRENCH DETAIL SHOWN IS GENERAL, SEE STANDARD 1030D FOR DETAILS REQUIRED FOR PIPE CULVERT INSTALLATIONS. SEE THE UTILITIES MANUAL FOR UTILITY INSTALLATION REQUIREMENTS.

4. AFTER REMOVING EXISTING PAVEMENT, THE SUBBASE AND VERTICAL FACE OF EXISTING PAVING SHALL BE DAMPED (BUT NOT WET), ADDITIONALLY, THE VERTICAL FACE OF THE EXISTING PAVEMENT SHALL BE PAINTED WITH A SOLUTION OF PORTLAND CEMENT AND WATER MIXED TO THE CONSISTENCY OF HEAVY PAINT. THE CONCRETE MIX SHALL THEN BE POURED BEFORE THIS SURFACE DRIES OUT. AFTER CONCRETE IS POURED, IT SHALL BE WORKED INTO ALL CORNERS AND INTO ALL ROUGH SURFACES OF THE EXISTING PAVEMENT.

5. WHERE PIPE IS REMOVED, BUT NOT REPLACED, PAYMENT FOR PIPE REMOVAL INCLUDES ALL ITEMS DESCRIBED IN GENERAL NOTE 2., WITH ALL OTHER NOTES AND DETAILS ALSO BEING APPLICABLE.

NOTE:
THIS STANDARD IS FOR USE WHERE PERMANENT PAVEMENT PATCHING IS REQUIRED. TEMPORARY PATCHING, IF REQUIRED, SHALL BE ACCORDING TO OTHER DETAILS, SPECIFICATIONS, AND/OR AS DIRECTED BY THE ENGINEER.

DEPARTMENT OF TRANSPORTATION
STATE OF GEORGIA

STANDARD

PAVEMENT PATCHING DETAILS
(STORM DRAIN OR UTILITY INSTALLATIONS BY OPEN CUT ACROSS EXISTING PAVEMENT)

NO SCALE — REV. & REDR., AUG. 1999

DATE | REVISION | BY

REV. ____
TRA. ____
CHK. ____

(SUBMITTED) STATE ROAD & AIRPORT DESIGN ENGR.
(APPROVED) CHIEF ENGINEER

NUMBER 1401

STATE	PROJECT NUMBER	SHEET NO.	TOTAL SHEETS
GA.			

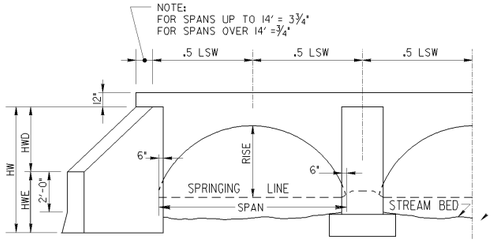

PART END ELEVATION

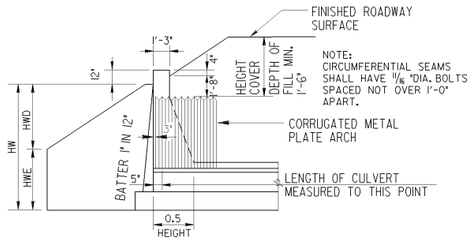

PART SECTION ON ℄ OF ARCH

GAUGE TABLE H-15									
SPAN FEET	HEIGHT OF COVER IN FEET								
	2	3	4	5	6	7	8	9	10
7	10	10	10	10	10	10	10	10	10
8	10	10	10	10	10	10	10	10	10
9	8	10	10	10	10	10	10	10	10
10	7	8	10	10	10	10	10	10	10
11	7	8	10	10	10	10	10	8	8
12	7	7	8	8	10	8	8	7	7
13	5	7	7	8	8	8	7	7	5
14	5	7	7	7	7	7	5	5	3
15	3	5	5	7	7	5	5	5	3
16	3	3	5	5	7	5	3	1	1
17	1	1	3	5	5	3	3	1	
18	1	1	3	3	5	3	1	1	
19			1	1	3	1	1		
20				1	1	1			

NOTE:
USE NO. 12 GAUGE FOR ALL SPANS SHORTER THAN SHOWN IN TABLE. SEE INDEX NUMBER FOR LONGER SPANS.

U.S. STANDARD GAUGES
NO. 12 GAUGE = 1/64 "
NO. 10 GAUGE = 9/64 "
NO. 8 GAUGE = 11/64 "
NO. 7 GAUGE = 3/16"
NO. 5 GAUGE = 1/32 "
NO. 3 GAUGE = 1/4"
NO. 1GAUGE = 3/32 "

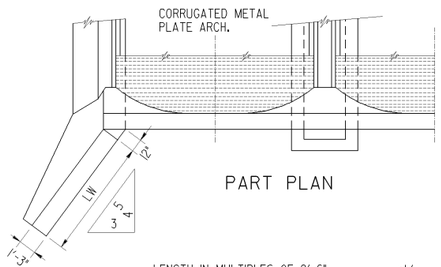

PART PLAN

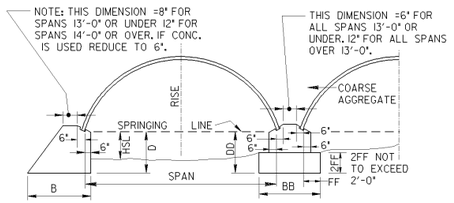

LONGITUDINAL SECTION AT ℄

QUANTITIES AND DIMENSIONS ONE WINGWALL				
HW	HWD	HWE	LW	CU.YDS.
5'-6"	2'-0"	3'-6"	3'-9"	1.168
6'-0"	2'-4"	3'-8"	4'-4"	1.455
6'-6"	2'-8"	3'-10"	5'-0"	1.880
7'-0"	3'-0"	4'-0"	5'-6"	2.286
7'-6"	3'-3"	4'-3"	6'-0"	2.740
8'-0"	3'-6"	4'-6"	6'-6"	3.269
8'-6"	3'-9"	4'-9"	7'-0"	3.869
9'-0"	4'-0"	5'-0"	7'-6"	4.538
9'-6"	4'-4"	5'-2"	8'-0"	5.247
10'-0"	4'-8"	5'-4"	8'-9"	6.160
10'-6"	5'-0"	5'-6"	9'-6"	7.185
11'-0"	5'-3"	5'-9"	10'-0"	8.274
11'-6"	5'-6"	6'-0"	10'-6"	9.290
12'-0"	5'-9"	6'-3"	11'-0"	10.478
12'-6"	6'-0"	6'-6"	11'-6"	11.763
13'-0"	6'-4"	6'-8"	12'-0"	12.769
13'-6"	6'-8"	6'-10"	12'-6"	14.481
14'-0"	7'-0"	7'-0"	13'-0"	15.970
14'-6"	7'-3"	7'-3"	13'-6"	17.674
15'-0"	7'-6"	7'-6"	14'-0"	19.486
15'-6"	7'-9"	7'-9"	14'-6"	21.426
16'-0"	8'-0"	8'-0"	15'-0"	23.057

SLOPE ANGLE OF ARCH SEAT

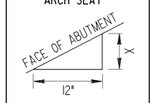

RISE/SPAN R/S	DISTANCE X
0.50	0"
0.48	1/2"
0.46	1"
0.44	1 1/2"
0.42	2 1/8"
0.40	2 3/4"
0.38	3 3/8"
0.36	4"
0.34	4 3/4"
0.32	5 1/2"
0.30	6 3/8"
0.28	7 3/4"
0.26	8 3/8"
0.24	9 5/8"
0.22	11"

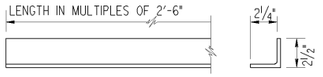

DETAIL OF 7/64 " (12 GA.) ANGLE

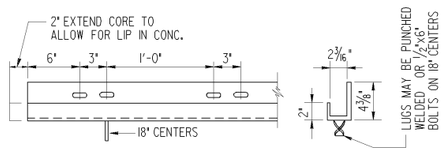

DETAIL OF 3/16 " ANCHOR CHANNEL

NOTE:
BEARING ANGLES SHALL BE USED FOR SPANS UP TO 12'-0". FOR SPANS OVER 12'-0" USE BEARING CHANNELS.



5/8" DIA. STANDARD HOOK BOLT

TO BE USED ON ALL SKEWED ARCHES TOGETHER WITH R.C. ARCH RING OR R.C. HEADWALL FOR SUPPORTING ENDS OF METAL ARCH.

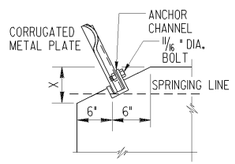

DETAIL OF ARCH SEAT

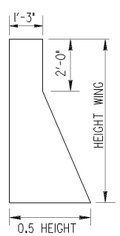

TYP. WALL OR WING SECTION

GENERAL NOTES

SPECIFICATIONS- GEORGIA STANDARD

FOUNDATIONS- SHALL BE CONSTRUCTED OF CEMENT MORTAR RUBBLE MASONRY UNLESS SPECIFIED OTHERWISE BY THE ENGINEER AS PROVIDED BELOW. IF IT IS FOUND NECESSARY TO VARY THE DEPTH "D" FROM THAT SHOWN ON PLANS, THE WIDTH "B" MUST BE VARIED IN THE SAME PROPORTION.

WALLS AND WINGS- SHALL BE CONSTRUCTED OF CEMENT MORTAR RUBBLE MASONRY UNLESS SPECIFIED OTHERWISE BY THE ENGINEER AS PROVIDED BELOW. BASE OF WINGS MAY BE RAISED OR LOWERED BY THE ENGINEER TO SUIT FOUNDATION CONDITIONS, BUT IN NO CASE SHALL WIDTH OF BASE OF WINGS OR WALLS BE LESS THAN 0.5 THE HEIGHT.

ARCH- SHALL BE CONSTRUCTED OF GALVANIZED CORRUGATED METAL PLATES OF THE GAUGE AND DIMENSIONS SHOWN ON THE PLANS OR PROPOSAL.

CONCRETE CLASS A- SHALL BE USED IN CASE THE ENGINEER DESIRES TO SUBSTITUTE MASS CONCRETE FOR RUBBLE MASONRY. ALL EXPOSED EDGES SHALL BE CHAMFERED 3/4" IF CONCRETE IS USED REDUCE THICKNESS OF STRAIGHT SECTIONS OF WINGS AND SPANDREL WALLS TO 12" AND BUILD FACE OF SPANDREL FLUSH WITH ENDS OF METAL.

QUANTITIES- SHOWN ON PLANS ARE FOR ESTIMATING PURPOSES ONLY, AND PAYMENT SHALL BE MADE FOR EXACT QUANTITIES PLACED AS COMPUTED BY THE ENGINEER.

ANCHOR CHANNELS-HEAVY ASPHALT-COARSE AGGREGATE- AND OTHER APPURTENANCE NECESSARY FOR CONSTRUCTING METAL PLATE ARCH CULVERT NOT LISTED IN QUANTITIES SHALL NOT BE PAID FOR DIRECTLY BUT SHALL BE INCLUDED IN UNIT PRICE BID FOR CONTRACT ITEM.

ERECTION AND DRAINAGE- AFTER METAL PLATE ARCH HAS BEEN ASSEMBLED THE NOTCH IN ANCHOR CHANNEL SHALL BE FILLED WITH HEAVY ASPHALT 99.5% SOLUBLE IN CARBON BISULFIDE BEING SURE THAT THE UPPER LINE OF HOLES IN BASE PLATES ARE LEFT OPEN. IMMEDIATELY BACK OF THESE HOLES A LAYER OF COARSE AGGREGATE SHALL BE PLACED NOT LESS THAN 12" DEEP TO INSURE PROPER DRAINAGE. IF BASE PLATES ARE NOT REGULARLY FURNISHED WITH A DOUBLE LINE OF HOLES, THE MANUFACTURE SHALL PROVIDE 3/4" WEEP HOLES ON 6" CENTERS AND 3 1/2" FROM EDGES OF PLATES.

DATE	REVISION	BY
6-30-98	REDRAWN	

DEPARTMENT OF TRANSPORTATION
STATE OF GEORGIA

STANDARD
CORRUGATED METAL PLATE ARCH CULVERTS SPANS 6'-0" TO 20'-0" INCLUSIVE

DES. ____
DRW. ____
TRA. ____
CHK. ____

(SUBMITTED) James A. Kemp
STATE ROAD & AIRPORT DESIGN ENGINEER

(APPROVED) Lloyd L. Ledbetter
CHIEF ENGINEER

NUMBER 2010

SHEET 1 OF 2

STATE	PROJECT NUMBER	SHEET NO.	TOTAL SHEETS
GA.			

SPAN IN FEET	RISE NO. OF PLATES AND R/S	SPRINGING LINE ABOVE STREAMBED-HSL 0′	1′	2′	3′ (TOTAL AREA (SQ. FT.))	SPANDREL ONE WALL LSW	CU.YD.	COVER IN FEET	SOIL BEARING = 6000 LBS. PER SQ. FT. ABUTMENT DEPTH D=3′ B	CY./FT.	DEPTH D=5′ B	CY./FT.	PIER BB	FF	CY./FOOT DD=3	DD=5	SOIL BEARING = 10000 LBS. PER SQ. FT. ABUTMENT DEPTH D=3′ B	CY./FT.	DEPTH D=5′ B	CY./FT.	PIER BB	FF	CY./FOOT DD=3	DD=5
6	2′-5″ 2 0.40	11	16	21	26	7′-6″	1.124 • .155	2 AND 3 4 TO 6 7 AND 8 9 AND 10	2.2 2.3 2.3 2.5	.215 .221 .221 .232	2.9 3.0 3.1 3.4	.417 .426 .435 .463	2.5 2.5 2.5 2.5	0 0 0 0	.287 .287 .287 .287	.472 .472 .472 .472	2.1 2.0 2.0 2.1	.209 .204 .204 .209	2.6 2.4 2.5 2.75	.389 .371 .380 .403	2.5	0	.287	.472
7	3′-1″ 2½ 0.44	16	22	28	34	8′-6″	1.402 • .194	2 AND 3 4 TO 6 7 AND 8 9 AND 10	2.2 2.2 2.4 2.6	.215 .215 .226 .237	2.9 2.9 3.2 3.4	.417 .417 .447 .463	2.5 2.5 2.5 2.5	0 0 0 0	.287 .287 .287 .287	.472 .472 .472 .472	2.0 1.8 1.8 2.1	.204 .193 .193 .209	2.4 2.3 2.4 2.6	.371 .361 .371 .389	2.5	0	.287	.472
8	2′-8″ 2½ 0.33	15	22	29	36	9′-6″	1.487 • .169	2 AND 3 4 TO 6 7 AND 8 9 AND 10	2.5 2.5 2.7 3.1	.232 .232 .243 .265	3.3 3.4 3.8 4.1	.454 .463 .500 .528	2.5 2.5 2.5 2.5	0 0 0 0	.287 .287 .287 .287	.472 .472 .472 .472	2.4 2.3 2.3 2.4	.226 .221 .221 .226	2.8 2.9 3.0 3.2	.408 .417 .426 .447	2.5	0	.287	.472
	3′-10″ 3 0.48	24	31	38	45	9′-6″	1.731 • .243	2 AND 3 4 TO 6 7 AND 8 9 AND 10	2.1 2.3 2.4 2.6	.209 .221 .226 .237	2.8 3.2 3.2 3.4	.408 .447 .447 .463	2.5 2.5 2.5 2.5	0 0 0 0	.287 .287 .287 .287	.472 .472 .472 .472	1.9 1.9 2.0 2.1	.198 .198 .204 .209	2.5 2.6 2.6 2.8	.380 .380 .389 .408	2.5	0	.287	.472
9	3′-6″ 3 0.39	23	31	39	47	10′-6″	1.843 • .220	2 AND 3 4 TO 6 7 AND 8 9 AND 10	2.4 2.6 2.9 3.1	.226 .237 .254 .265	3.3 3.4 3.8 4.1	.454 .463 .500 .528	2.5 2.5 2.5 2.7	0 0 0 0.1	.287 .287 .287 .289	.472 .472 .472 .474	2.2 2.1 2.2 2.4	.215 .209 .215 .226	2.9 2.8 2.9 3.1	.417 .408 .417 .435	2.5	0	.287	.472
	4′-6″ 3½ 0.50	32	40	48	56	10′-6″	2.080 • .292	2 AND 3 4 TO 6 7 AND 8 9 AND 10	2.1 2.3 2.5 2.7	.209 .221 .232 .243	2.8 3.0 3.3 3.5	.408 .426 .454 .472	2.5 2.5 2.5 2.7	0 0 0 0.1	.287 .287 .287 .289	.472 .472 .472 .474	1.8 1.9 2.0 2.2	.193 .198 .204 .215	2.3 2.4 2.5 2.7	.361 .371 .380 .398	2.5	0	.287	.472
10	3′-0″ 3 0.30	21	30	39	48	11′-6″	1.941 • .188	2 AND 3 4 TO 6 7 AND 8 9 AND 10	2.8 3.2 3.4 3.5	.248 .271 .282 .287	3.7 4.1 4.5 4.8	.491 .528 .565 .593	2.5 2.5 2.5 2.9	0 0 0 0.2	.287 .287 .287 .293	.472 .472 .472 .478	2.5 2.6 2.6 2.8	.232 .237 .237 .248	3.3 3.4 3.5 3.7	.454 .463 .472 .491	2.5	0	.287	.472
	4′-3″ 3½ 0.42	31	40	49	58	11′-6″	2.374 • .273	2 AND 3 4 TO 6 7 AND 8 9 AND 10	2.4 2.6 3.0 3.4	.226 .237 .259 .282	3.2 3.5 3.9 4.5	.447 .472 .509 .565	2.5 2.5 2.5 2.9	0 0 0 0.2	.287 .287 .287 .293	.472 .472 .472 .478	2.0 2.1 2.4 2.7	.204 .209 .226 .243	2.6 2.8 3.0 3.4	.389 .408 .426 .463	2.5	0	.287	.472
	5′-2″ 4 0.50	41	50	59	68	11′-6″	2.465 • .346	2 AND 3 4 TO 6 7 AND 8 9 AND 10	2.3 2.4 2.6 2.8	.221 .226 .237 .248	3.1 3.2 3.4 3.7	.435 .447 .463 .491	2.5 2.5 2.5 2.9	0 0 0 0.2	.287 .287 .287 .293	.472 .472 .472 .478	1.9 1.9 2.1 2.2	.198 .198 .209 .215	2.5 2.6 2.7 2.8	.380 .389 .398 .408	2.5	0	.287	.472
11	3′-10″ 3½ 0.34	30	40	50	60	12′-6″	2.832 • .243	2 AND 3 4 TO 6 7 AND 8 9 AND 10	2.8 3.0 3.2 3.4	.248 .259 .271 .282	3.6 4.0 4.3 4.5	.482 .519 .546 .565	2.5 2.5 2.7 3.1	0 0 0.1 0.3	.287 .287 .289 .301	.472 .472 .474 .486	2.5 2.5 2.6 2.8	.232 .232 .237 .248	3.2 3.2 3.4 3.5	.447 .447 .463 .472	2.5	0	.287	.472
	5′-0″ 4 0.45	41	51	61	71	12′-6″	2.804 • .333	2 AND 3 4 TO 6 7 AND 8 9 AND 10	2.4 2.7 3.0 3.3	.226 .243 .259 .276	3.2 3.5 3.8 4.1	.447 .472 .500 .528	2.5 2.5 2.7 3.1	0 0 0.1 0.3	.287 .287 .289 .301	.472 .472 .474 .486	2.0 2.0 2.3 2.5	.204 .204 .221 .232	2.6 2.7 2.8 3.1	.389 .398 .408 .435	2.5	0	.287	.472
12	3′-3″ 3½ 0.27	27	38	49	60	13′-6″	2.366 • .204	2 AND 3 4 TO 6 7 AND 8 9 AND 10	3.2 3.5 3.9 4.2	.271 .287 .309 .326	4.2 4.8 5.1 5.5	.537 .593 .621 .658	2.5 2.5 2.9 3.3	0 0 0.2 0.4	.287 .287 .293 .311	.472 .472 .478 .496	2.8 2.9 3.1 3.3	.248 .254 .265 .276	3.8 3.8 4.0 4.3	.500 .500 .519 .546	2.5	0	.287	.472
	4′-7″ 4 0.38	41	52	63	74	13′-6″	2.696 • .299	2 AND 3 4 TO 6 7 AND 8 9 AND 10	2.7 2.9 3.2 3.4	.243 .254 .271 .282	3.5 3.9 4.3 4.6	.472 .509 .546 .574	2.5 2.5 2.9 3.3	0 0 0.2 0.4	.287 .287 .293 .311	.472 .472 .478 .496	2.2 2.4 2.5 2.7	.215 .226 .232 .243	3.1 3.2 3.4 3.5	.435 .447 .463 .472	2.5	0	.287	.472
	5′-8″ 4½ 0.47	51	62	73	84	13′-6″	3.370 • .392	2 AND 3 4 TO 6 7 AND 8 9 AND 10	2.4 2.7 2.9 3.1	.226 .243 .254 .265	3.2 3.5 3.8 4.1	.447 .472 .500 .528	2.5 2.5 2.9 3.3	0 0 0.2 0.4	.287 .287 .293 .311	.472 .472 .478 .496	1.9 2.1 2.3 2.4	.198 .209 .221 .226	2.5 2.7 2.9 3.1	.380 .398 .417 .435	2.5	0	.287	.472
13	4′-2″ 4 0.32	38	50	62	74	14′-6″	2.988 • .266	2 AND 3 4 TO 6 7 AND 8 9 AND 10	3.1 3.4 3.7 4.0	.265 .282 .298 .315	4.0 4.5 4.9 5.3	.519 .565 .602 .639	2.5 2.9 3.1 3.5	0 0.2 0.3 0.5	.287 .293 .301 .324	.472 .478 .486 .509	2.7 2.8 3.0 3.2	.243 .248 .259 .271	3.6 3.6 3.8 4.1	.482 .482 .500 .528	2.5	0	.287	.472
	5′-3″ 4½ 0.40	51	63	75	87	14′-6″	3.222 • .355	2 AND 3 4 TO 6 7 AND 8 9 AND 10	2.6 2.9 3.1 3.3	.237 .254 .265 .276	3.4 3.8 4.1 4.4	.463 .500 .528 .556	2.5 2.9 3.1 3.5	0 0.2 0.3 0.5	.287 .293 .301 .324	.472 .478 .486 .509	2.5 2.7 2.7 2.75	.232 .243 .243 .246	3.5 3.7 3.9 4.1	.472 .491 .509 .528	2.5	0	.287	.472
14	4′-10″ 4½ 0.35	49	62	75	88	16′-0″	3.576 • .064	2 AND 3 4 TO 6 7 AND 8 9 AND 10	3.1 3.4 3.6 3.9	.302 .319 .330 .346	4.4 4.7 4.9 5.2	.611 .639 .657 .685	3.0 3.0 3.2 3.8	0 0 0.1 0.4	.352 .352 .353 .376	.574 .574 .576 .598	2.75 2.75 3.11 3.4	.282 .282 .302 .319	3.5 4.0 4.3 4.6	.528 .574 .602 .630	3.0	0	.352	.574
	6′-1″ 5 0.43	63	76	89	102	16′-0″	4.425 • .086	2 AND 3 4 TO 6 7 AND 8 9 AND 10	2.7 3.0 3.2 3.3	.280 .296 .307 .313	3.7 4.2 4.3 4.5	.546 .593 .602 .620	3.0 3.0 3.2 3.8	0 0 0.1 0.4	.352 .352 .353 .376	.574 .574 .576 .598	2.2 2.6 2.7 2.75	.252 .274 .280 .282	2.9 3.0 3.37 3.75	.472 .481 .516 .551	3.0	0	.352	.574
15	5′-8″ 5 0.38	62	76	90	104	17′-0″	4.345 • .079	2 AND 3 4 TO 6 7 AND 8 9 AND 10	3.0 3.3 3.6 3.9	.296 .313 .330 .346	4.1 4.5 4.8 5.1	.583 .620 .648 .676	3.0 3.0 3.4 4.0	0 0 0.2 0.5	.352 .352 .358 .389	.574 .574 .580 .611	2.5 2.6 2.75 2.9	.269 .274 .282 .291	3.4 3.4 3.65 3.9	.518 .518 .542 .565	3.0	0	.352	.574
	6′-9″ 5½ 0.45	76	90	104	118	17′-0″	4.961 • .100	2 AND 3 4 TO 6 7 AND 8 9 AND 10	2.8 3.1 3.3 3.5	.285 .302 .313 .324	3.75 4.1 4.25 4.5	.551 .583 .598 .620	3.0 3.0 3.4 4.0	0 0 0.2 0.5	.352 .352 .358 .389	.574 .574 .580 .611	2.25 2.5 2.6 2.7	.255 .269 .274 .280	2.9 3.2 3.4 3.6	.472 .500 .518 .537	3.0	0	.352	.574
	7′-8″ 6 H. C.	91	105	119	133	17′-0″	5.107 • .120	2 AND 3 4 TO 6 7 AND 8 9 AND 10	2.6 2.9 3.1 3.3	.274 .291 .302 .313	3.3 3.8 4.1 4.3	.509 .556 .583 .602	3.0 3.0 3.4 4.0	0 0 0.2 0.5	.352 .352 .358 .389	.574 .574 .580 .611	2.2 2.4 2.5 2.6	.252 .263 .269 .274	2.7 2.9 3.3 3.5	.454 .472 .509 .528	3.0	0	.352	.574

SPAN IN FEET	RISE NO. OF PLATES AND R/S	SPRINGING LINE ABOVE STREAMBED-HSL 0′	1′	2′	3′ (TOTAL AREA (SQ. FT.))	SPANDREL ONE WALL LSW	CU.YD.	COVER IN FEET	SOIL BEARING = 6000 LBS. PER SQ. FT. ABUTMENT DEPTH D=3′ B	CY./FT.	DEPTH D=5′ B	CY./FT.	PIER BB	FF	CY./FOOT DD=3	DD=5	SOIL BEARING = 10000 LBS. PER SQ. FT. ABUTMENT DEPTH D=3′ B	CY./FT.	DEPTH D=5′ B	CY./FT.	PIER BB	FF	CY./FOOT DD=3	DD=5
16	5′-2″ 5 0.32	60	75	90	105	18′-0″	4.155 • .070	2 AND 3 4 TO 6 7 AND 8 9 AND 10	3.4 3.8 4.0 4.2	.319 .341 .352 .363	4.8 5.1 5.4 5.75	.648 .676 .704 .736	3.0 3.1 3.7 4.3	0 0.05 0.35 0.65	.352 .352 .370 .414	.574 .574 .592 .637	2.9 3.4 3.4 3.4	.291 .319 .319 .319	3.8 4.5 4.7 4.8	.556 .620 .639 .648	3.0	0	.352	.574
	6′-5″ 5½ 0.40	76	91	106	121	18′-0″	5.055 • .093	2 AND 3 4 TO 6 7 AND 8 9 AND 10	2.9 3.3 3.6 3.8	.291 .313 .330 .341	4.1 4.5 4.7 5.0	.583 .620 .639 .667	3.0 3.1 3.7 4.3	0 0.05 0.35 0.65	.352 .352 .370 .414	.574 .574 .592 .637	2.4 2.6 3.0 3.25	.263 .274 .296 .310	3.3 3.4 3.7 3.9	.509 .518 .546 .565	3.0	0	.352	.574
	7′-6″ 6 0.47	90	105	120	135	18′-0″	5.944 • .116	2 AND 3 4 TO 6 7 AND 8 9 AND 10	2.7 3.1 3.3 3.5	.280 .302 .313 .324	3.6 3.9 4.0 4.4	.537 .565 .574 .611	3.0 3.1 3.7 4.3	0 0.05 0.35 0.65	.352 .352 .370 .414	.574 .574 .592 .637	2.3 2.5 2.8 3.2	.257 .269 .285 .307	3.1 3.3 3.5 3.7	.491 .509 .528 .546	3.0	0	.352	.574
17	5′-11″ 5½ 0.35	72	88	104	120	19′-0″	5.261 • .083	2 TO 4 5 TO 7 8 TO 10	3.4 3.7 4.2	.319 .335 .363	4.6 4.9 5.5	.630 .657 .713	3.0 3.7 4.6	0 0.35 0.8	.352 .370 .447	.574 .592 .669	2.8 3.2 3.5	.285 .307 .324	3.7 4.2 4.5	.546 .593 .620	3.0	0	.352	.574
	7′-2″ 6 0.42	90	106	122	138	19′-0″	5.955 • .108	2 TO 4 5 TO 7 8 TO 10	3.0 3.5 4.0	.296 .324 .352	4.2 4.5 4.9	.593 .620 .657	3.0 3.7 4.6	0 0.35 0.8	.352 .370 .447	.574 .592 .669	2.25 2.7 3.4	.255 .280 .319	3.1 3.6 4.3	.491 .537 .602	3.0	0	.352	.574
	8′-2″ 6½ 0.48	106	122	138	154	19′-0″	6.482 • .132	2 TO 4 5 TO 7 8 TO 10	2.9 3.3 3.5	.291 .313 .324	3.8 4.1 4.4	.556 .583 .611	3.0 3.7 4.6	0 0.35 0.8	.352 .370 .447	.574 .592 .669	2.2 2.6 3.3	.252 .274 .313	2.8 3.5 4.2	.463 .528 .593	3.0	0	.352	.574
18	5′-5″ 5½ 0.30	70	87	104	121	20′-0″	4.771 • .065	2 TO 4 5 TO 7 8 TO 10	3.4 4.1 4.4	.319 .357 .374	4.9 5.4 5.8	.657 .704 .741	3.0 3.9 4.8	0 0.45 0.9	.352 .382 .472	.574 .407 .694	3.15 3.4 3.6	.305 .319 .330	4.3 4.6 4.75	.602 .630 .644	3.0	0	.352	.574
	6′-9″ 6 0.37	88	105	122	139	20′-0″	6.063 • .100	2 TO 4 5 TO 7 8 TO 10	3.3 3.7 4.0	.313 .335 .352	4.6 5.0 5.6	.630 .667 .722	3.0 3.9 4.8	0 0.45 0.9	.352 .382 .472	.574 .407 .694	2.7 3.0 3.3	.280 .296 .313	3.65 4.1 4.3	.542 .583 .602	3.0	0	.352	.574
	7′-11″ 6½ 0.44	106	123	140	157	20′-0″	6.912 • .126	2 TO 4 5 TO 7 8 TO 10	3.1 3.5 3.8	.302 .324 .341	4.2 4.5 4.9	.593 .620 .657	3.0 3.9 4.8	0 0.45 0.9	.352 .382 .472	.574 .407 .694	2.45 2.7 2.9	.266 .280 .291	3.1 3.5 3.8	.491 .528 .556	3.0	0	.352	.574
	8′-10″ 7 0.49	124	141	158	175	20′-0″	6.854 • .148	2 TO 4 5 TO 7 8 TO 10	2.9 3.4 3.7	.291 .319 .335	3.8 4.2 4.5	.556 .593 .620	3.0 3.9 4.8	0 0.45 0.9	.352 .382 .472	.574 .407 .694	2.2 2.6 2.7	.252 .274 .280	2.9 3.3 3.6	.472 .509 .537	3.0	0	.352	.574
19	6′-3″ 6 0.33	85	103	121	139	21′-0″	5.854 • .090	2 TO 4 5 TO 7 8 TO 10	3.6 4.3 4.5	.330 .368 .380	4.8 5.5 5.9	.648 .713 .750	3.1 4.0 5.0	0.05 0.5 1.0	.352 .389 .500	.574 .611 .722	3.1 3.5 4.0	.302 .324 .352	4.0 4.2 4.7	.574 .593 .639	3.0	0	.352	.574
	7′-6″ 6½ 0.39	106	124	142	160	21′-0″	6.555 • .116	2 TO 4 5 TO 7 8 TO 10	3.3 3.8 4.0	.313 .341 .352	4.6 5.0 5.4	.630 .667 .704	3.1 4.0 5.0	0.05 0.5 1.0	.352 .389 .500	.574 .611 .722	2.7 2.9 3.25	.280 .291 .310	3.6 3.9 4.3	.537 .565 .602	3.0	0	.352	.574
	8′-7″ 7 0.45	123	141	159	177	21′-0″	7.507 • .142	2 TO 4 5 TO 7 8 TO 10	3.1 3.5 3.8	.302 .324 .341	4.3 4.8 5.3	.602 .648 .694	3.2 4.1 5.1	0.1 0.55 1.05	.353 .397 .515	.576 .619 .737	2.35 2.6 3.0	.260 .274 .296	3.2 3.6 4.0	.500 .537 .534	3.0	0	.352	.574
	9′-6″ 7½ 0.50	142	160	178	196	21′-0″	7.546 • .166	2 TO 4 5 TO 7 8 TO 10	3.0 3.4 3.8	.296 .319 .341	3.9 4.6 5.0	.565 .630 .667	3.2 4.2 5.1	0.1 0.6 1.05	.353 .405 .515	.576 .627 .737	2.3 2.5 2.8	.257 .269 .285	3.0 3.5 3.8	.481 .528 .556	3.1	0.05	.352	.574
20	7′-1″ 6½ 0.35	101	120	139	158	22′-0″	7.116 • .107	2 TO 4 5 TO 7 8 TO 10	3.4 4.0 4.2	.319 .352 .363	4.8 5.6 5.9	.648 .722 .750	3.2 4.2 5.2	0.1 0.6 1.1	.353 .405 .531	.576 .627 .753	3.0 3.3 3.8	.296 .313 .341	4.0 4.6 5.0	.574 .630 .667	3.1	0.05	.352	.574
	8′-3″ 7 0.41	123	142	161	180	22′-0″	7.444 • .133	2 TO 4 5 TO 7 8 TO 10	3.3 3.7 4.1	.313 .335 .357	4.6 5.1 5.5	.630 .676 .713	3.2 4.2 5.3	0.1 0.6 1.15	.353 .405 .548	.576 .627 .770	2.6 2.9 3.3	.274 .291 .313	3.4 3.8 4.4	.518 .556 .611	3.2	0.1	.353	.577
	9′-3″ 7½ 0.46	141	160	179	198	22′-0″	8.186 • .160	2 TO 4 5 TO 7 8 TO 10	3.1 3.5 3.9	.302 .324 .346	4.3 4.9 5.4	.602 .657 .704	3.3 4.3 5.3	0.15 0.65 1.15	.355 .414 .548	.577 .637 .770	2.5 2.7 3.0	.269 .280 .296	3.1 3.7 4.2	.491 .546 .593	3.2	0.1	.353	.577
	10′-2″ 8 HC	161	180	199	218	22′-0″	8.338 • .184	2 TO 4 5 TO 7 8 TO 10	2.9 3.4 3.7	.291 .319 .335	3.8 4.4 4.9	.556 .611 .657	3.3 4.3 5.3	0.15 0.65 1.15	.355 .414 .548	.577 .637 .770	2.4 3.0 3.0	.263 .296 .296	3.0 3.5 3.9	.481 .528 .565	3.2	0.1	.353	.577

• THIS QUANTITY SHALL BE ADDED TO SPANDREL WALL QUANTITY FOR EACH END SPAN WALL

DEPARTMENT OF TRANSPORTATION
STATE OF GEORGIA

DATE 6-30-98
REDRAWN
REVISION
BY

STANDARD
CORRUGATED METAL PLATE ARCH CULVERTS SPANS 6′-0" TO 20′-0" INCLUSIVE

DES. ____
DRW. ____
TRA. ____
CHK. ____

(SUBMITTED) James A. Kaiser
STATE ROAD & AIRPORT DESIGN ENGINEER
(APPROVED) Frank L. Doblin
CHIEF ENGINEER

NUMBER 2010
SHEET 2 OF 2

STATE	PROJECT NUMBER	SHEET NO.	TOTAL SHEETS
GA.			

STRUCTURAL PLATE CORRUGATED STEEL AND ALUMINUM CIRCULAR PIPE
MINIMUM THICKNESS REQUIRED (H-20 LOADING)

DIAMETER INCH	STEEL 6"x2" CORRUGAT.	ALUMINUM 9"x 2-1/2" CORRUGAT.	HEIGHT OF COVER FEET 1-5	5-10	10-15	15-20	20-25	25-30	30-35	35-40	40-45	45-50	50-55	55-60	60-70	70-80	80-90	90-100
72	•		.109	.109	.109	.109	.109	.109	.138 / .109 *	.168 / .138 *	.218 / .138 *	.249 / .138 *	.280 / .168 *	.280 / .168 *	.188 *	.218 *	.218 *	.280 *
		•	.09	.09	.09	.10	.125	.175 / .15 *	.225 / .175 *	.175 *	.20 *	.20 *	.25 *					
78	•		.109	.109	.109	.109	.109	.109	.168 / .138 *	.188 / .138 *	.249 / .138 *	.280 / .168 *	.168 *	.168 *	.188 *	.218 *	.280 *	
		•	.09	.09	.09	.10	.125	.20 / .15 *	.175 *	.175 *	.20 *	.225 *	.25 *					
84	•		.109	.109	.109	.109	.109	.138 / .109 *	.218 / .138 *	.249 / .138 *	.168 *	.168 *	.168 *	.188 *	.218 *	.249 *		
		•	.09	.09	.10	.125	.15 / .125 *	.25 / .15 *	.175 *	.20 *	.225 *	.25 *						
90	•		.109	.109	.109	.109	.109	.168 / .138 *	.249 / .138 *	.138	.168 *	.168 *	.188 *	.188 *	.249 *			
		•	.09	.09	.10	.125	.20 / .15 *	.175 *	.175 *	.225 *	.25 *							
96	•		.109	.109	.109	.109	.138 / .109 *	.218 / .138 *	.280 / .138 *	.168 *	.168 *	.168 *	.188 *	.218 *	.280 *			
		•	.09	.09	.10	.125	.225 / .15 *	.175 *	.20 *	.225 *	.25 *							
102	•		.109	.109	.109	.109	.168 / .138 *	.249 / .138 *	.138 *	.168 *	.168 *	.188 *	.188 *	.249 *				
		•	.10	.10	.125	.125	.15 *	.175 *	.20 *	.25 *								
108	•		.109	.109	.109	.109	.188 / .138 *	.280 / .138 *	.138 *	.168 *	.168 *	.188 *	.249 *	.280 *				
		•	.10	.10	.125	.15	.175 *	.175 *	.225 *	.25 *								
114	•		.109	.109	.109	.109	.218 / .138 *	.138 *	.168 *	.168 *	.188 *	.218 *	.280 *					
		•	.10	.10	.125	.175 / .15 *	.175 *	.20 *	.25 *									
120	•		.109	.109	.109	.109	.249 / .138 *	.138 *	.168 *	.168 *	.188 *	.249 *						
		•	.10	.10	.125	.175 / .15 *	.175 *	.20 *	.25 *									
126	•		.109	.109	.109	.138	.280 / .138 *	.138 *	.168 *	.188 *	.218 *	.280 *						
		•	.125	.125	.125	.20 / .15 *	.175 *	.225 *	.25 *									
132	•		.109	.109	.109	.138	.138 *	.168 *	.168 *	.188 *	.218 *							
		•	.125	.125	.15	.20 / .15 *	.20 *	.225 *										
138	•		.109	.109	.109	.168 / .138 *	.168 *	.168 *	.188 *	.188 *	.280 *							
		•	.125	.125	.15	.225 / .175 *	.20 *	.25 *										
144	•		.109	.109	.109	.168 / .138 *	.138 *	.168 *	.188 *	.218 *	.280 *							
		•	.125	.125	.15	.225 / .175 *	.20 *	.25 *										
150	•		.109	.109	.109	.168 / .138 *	.168 *	.168 *	.188 *	.218 *								
		•	.15	.15	.175	.175 *	.225 *											
156	•		.109	.109	.109	.188 / .138 *	.168 *	.168 *	.188 *	.218 *								
		•	.15	.15	.175	.175 *	.225											
162	•		.109	.109	.109	.249 / .138 *	.168 *	.168 *	.218 *	.249 *								
		•	.15	.15	.175	.175 *	.25 *											
168	•		.109	.109	.138	.249 / .138 *	.168 *	.188 *	.218 *	.249 *								
		•	.15	.15	.175	.175 *	.25 *											
174	•		.138	.138	.138	.280 / .138 *	.168 *	.188 *	.218 *	.280 *								
		•	.175	.175	.20	.20 *												
180	•		.138	.138	.138	.280 / .138 *	.168 *	.188 *	.218 *	.280 *								
		•	.175	.175	.20	.20 *												

NOTE:
* THICKNESSES SHOWN IN ABOVE TABLE ARE FOR STRUCTURAL PLATE PIPE. ASSEMBLED WITH 4 BOLTS PER FOOT LONGITUDINAL SEAM.
DENOTES CIRCULAR CROSS SECTION FACTORY ELONGATED ON VERTICAL AXIS 5% +- NOMINAL DIAMETER.

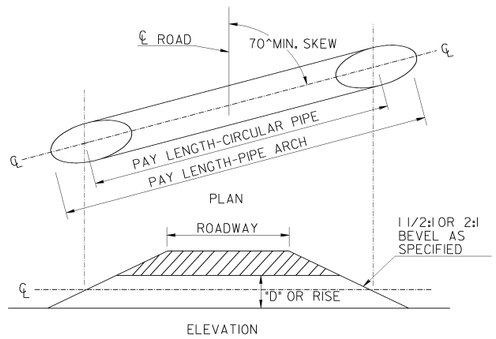

END TREATMENT

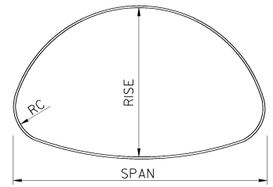

PIPE ARCH

STRUCTURAL PLATE CORRUGATED STEEL PIPE ARCHES (6"x2" CORRUGATIONS)

SPAN FT.-IN.	RISE FT.-IN.	MIN. THICKNESS IN.	HEIGHT COVER MIN IN.	HEIGHT COVER MAX.FT	X-SECT AREA SQ.FT.	DIA. PIPE EQUAL PERIPHERY
18 INCH CORNER RADIUS, Rc						
6-1	4-7	.109	18	15	22	66"
7-0	5-1	.109	18	15	28	75"
7-11	5-7	.109	18	12	35	84"
8-10	6-1	.109	24	11	43	93"
9-9	6-7	.109	24	10	52	102"
10-11	7-1	.109	24	9	61	111"
11-10	7-7	.109	24	7	71	120"
12-10	8-4	.109	24	6	85	132"
14-1	8-9	.109	24	5	97	141"
31 INCH CORNER RADIUS, Rc						
13-3	9-4	.109	24	13	98	138"
14-2	9-10	.109	24	12	110	147"
15-4	10-4	.138	24	11	124	156"
16-3	10-10	.138	36	11	138	165"
17-2	11-4	.138	36	10	153	174"
18-1	11-10	.168	36	9	168	183"
19-3	12-4	.168	36	9	185	192"
19-11	12-10	.168	36	8	202	201"
20-7	13-2	.168	36	7	214	207"

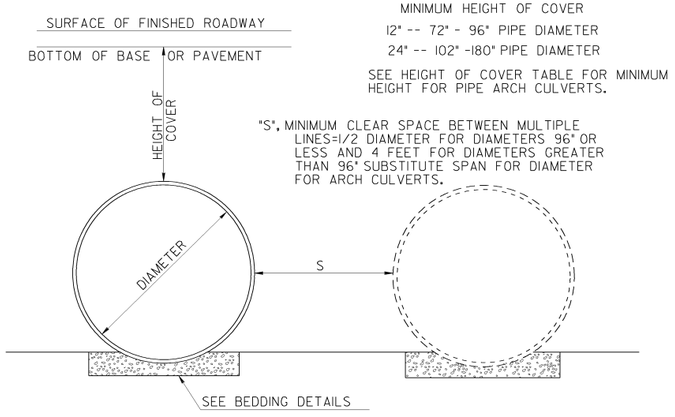

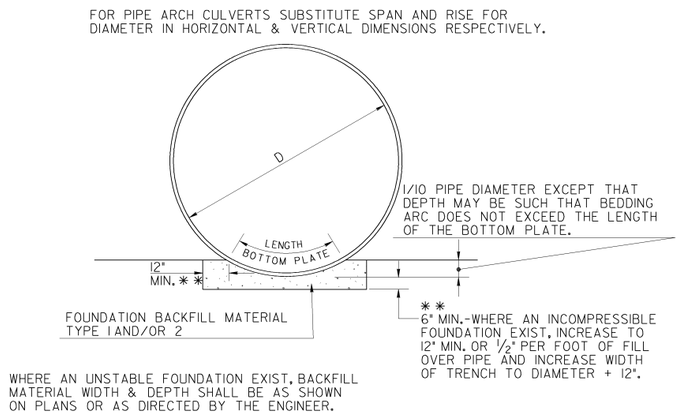

BEDDING DETAIL

DEPARTMENT OF TRANSPORTATION
STATE OF GEORGIA

STANDARD
STRUCTURAL PLATE PIPE AND PIPE ARCH CULVERTS

NO SCALE — RE-DRAWN OCT. 1999

DATE / REVISION / BY

DES. ____ DRW. ____ TRA. ____ CHK. ____

(SUBMITTED) James A. Kemp — STATE ROAD & AIRPORT DESIGN ENGR.

(APPROVED) Arnold L. Fabbri — CHIEF ENGINEER

NUMBER 2011B

GDOT Georgia Department of Transportation | P. I. No. XXXXXXX

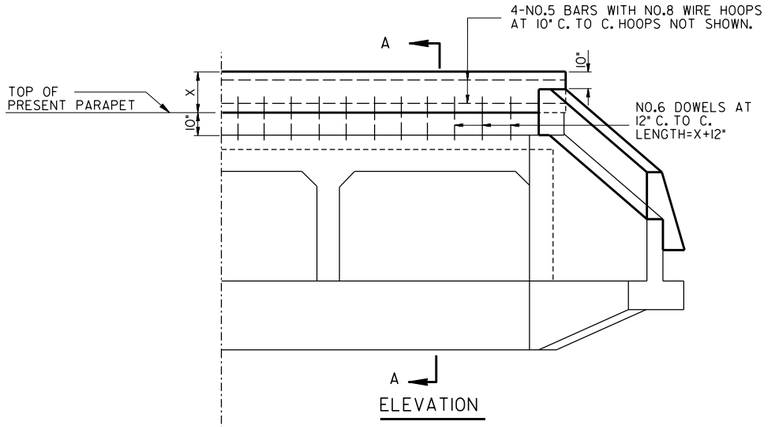

ELEVATION

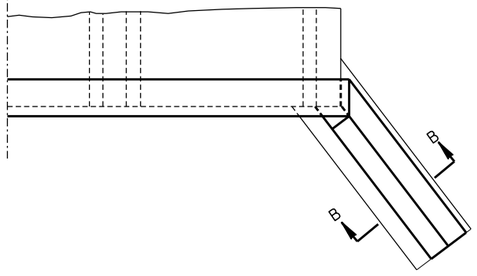

PLAN

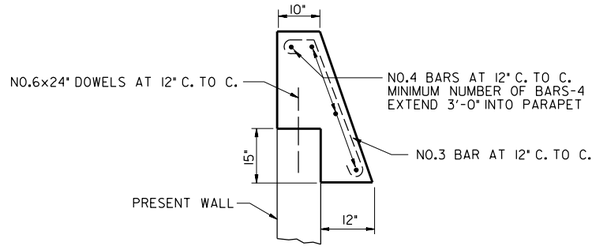

SECTION B-B

DETAILS FOR RAISING PARAPETS OF CULVERTS

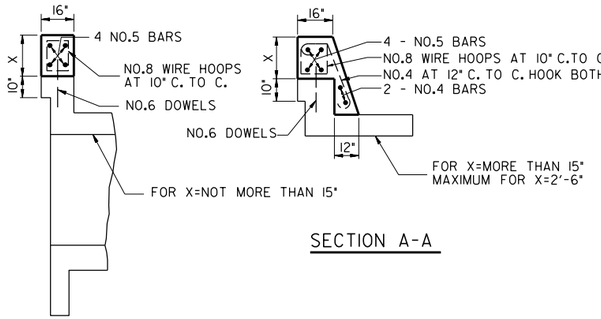

SECTION A-A

SECTION A-A

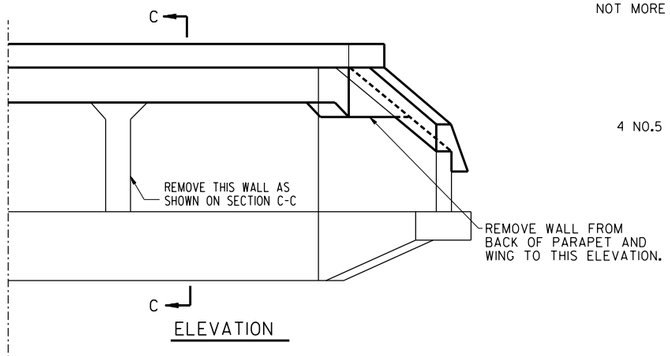

ELEVATION

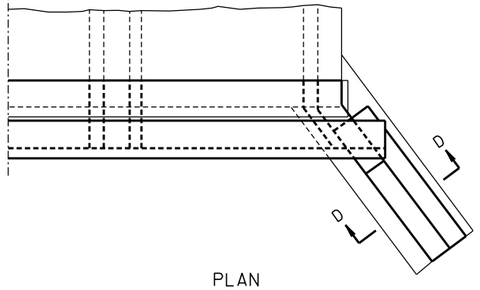

PLAN

DETAILS FOR LENGTHENING CULVERTS

GENERAL NOTES

ALL CONCRETE TO BE CLASS "A".

WHERE NEW CONCRETE JOINS OLD, CLEAN SURFACE OF OLD CONCRETE AND ROUGHEN WITH CHISEL OR PICK. WET OLD CONCRETE THOROUGHLY BEFORE PLACING NEW.

DOWELS TO BE GROUTED INTO OLD CONCRETE. DO NOT TRY TO HAVE DOWELS PARALLEL. THEY AFFORD BETTER BOND IF INCLINED IN VARIOUS DIRECTIONS.

WHEN REMOVING PARTS OF PRESENT CULVERT PRESERVE ALL STEEL THAT CAN BE USED TO TIE NEW WORK TO OLD.

CLEAN STEEL OF ALL OLD CONCRETE BEFORE PLACING NEW.

FOR ADDITIONAL NOTES AND DETAILS SEE STANDARD PLANS BY WHICH PRESENT CULVERTS WERE BUILT.

INCIDENTAL WORK AND MATERIAL SUCH AS EXCAVATION, DRILLING FOR DOWELS, CLEANING AND REMOVING OLD CONCRETE, CABLE CLAMPS, ETC. WILL NOT BE PAID FOR SEPARATELY. COST OF SUCH ITEMS TO BE INCLUDED IN PRICE BID FOR CLASS "A" CONCRETE OR REINFORCING STEEL.

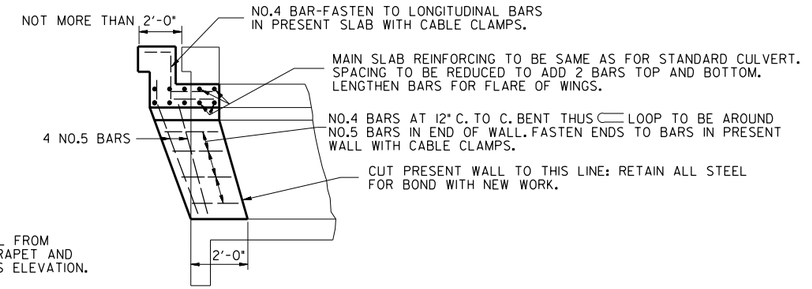

SECTION C-C

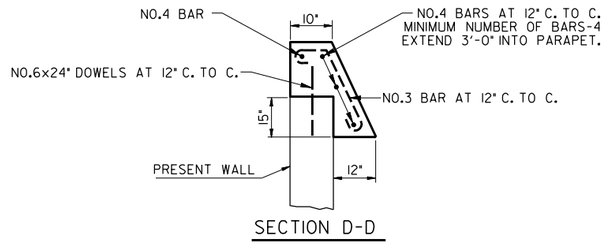

SECTION D-D

PRESENT STRUCTURE SHOWN IN LIGHT LINES

ADDED PORTIONS SHOWN IN HEAVY LINES

DEPARTMENT OF TRANSPORTATION
STATE OF GEORGIA

STANDARD

DETAILS FOR EXTENDING CULVERTS

NOT TO SCALE | REDRAWN JULY 2024 | JULY 1958

DATE | REVISION | BY

DESIGNED B.L.C.
REDRAWN H.L.K.
TRACED H.L.K.
CHECKED B.L.C.

(SUBMITTED) BRIDGE ENGINEER

(APPROVED) STATE HIGHWAY ENGINEER

NUMBER 2312

GDOT Georgia Department of Transportation | P. I. No. XXXXXXX

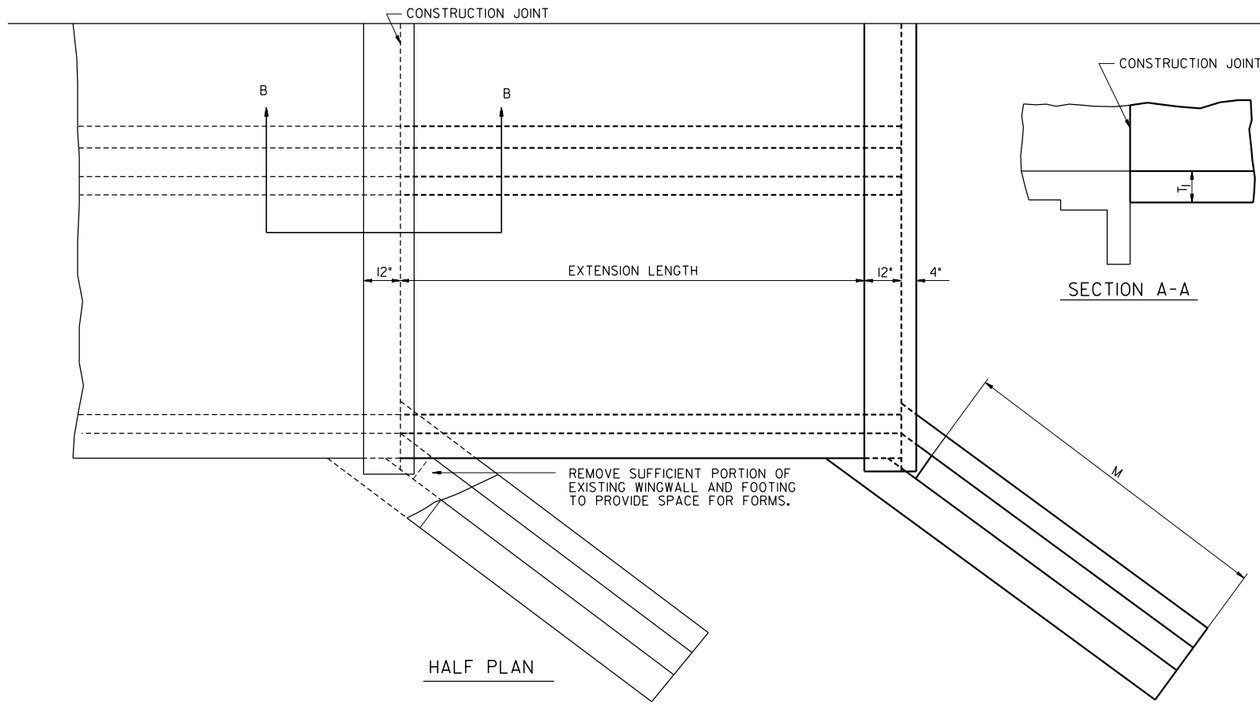

HALF PLAN

SECTION A-A

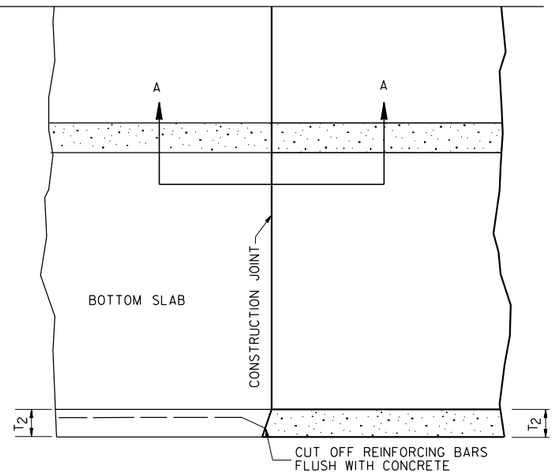

PARTIAL SECTION PLAN AT CONSTRUCTION JOINT

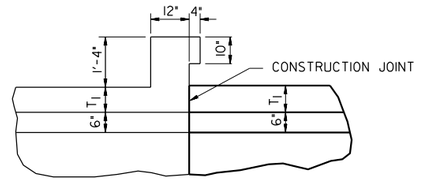

SECTION B-B

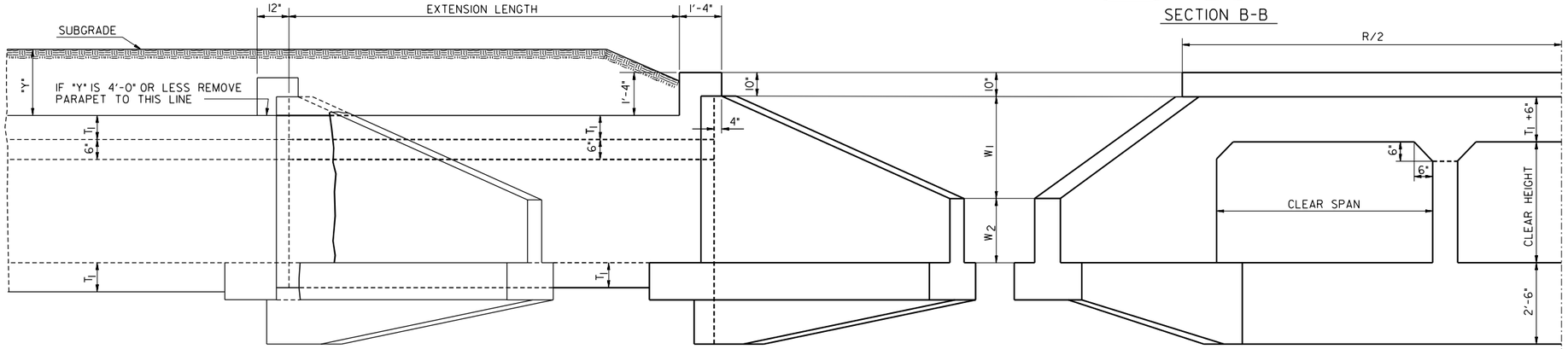

SIDE ELEVATION

HALF END ELEVATION

GENERAL NOTES

ALL CONCRETE SHALL BE CLASS "A".

FOR DETAILS OF EXTENDED PORTION OF CULVERT SEE STANDARD DRAWING REFERRED TO ON SUMMARY SHEET OF PLANS.
EXISTING STRUCTURE SHOWN IN LIGHT LINES.
ADDED PORTION SHOWN IN HEAVY LINES.

DEPARTMENT OF TRANSPORTATION
STATE OF GEORGIA

STANDARD

DETAILS FOR EXTENDING CONCRETE BOX CULVERTS

DEL. REF. BID PRICE REVISION	BY	DATE
		I-66

NOT TO SCALE — REDRAWN JULY 2024 — AUGUST 1949

DESIGNED R.K.J.
DRAWN R.K.J.
TRACED H.L.K.
CHECKED C.A.N.

(SUBMITTED) BRIDGE ENGINEER

(APPROVED) STATE HIGHWAY ENGINEER

NUMBER 2317

GDOT Georgia Department of Transportation | P. I. No. XXXXXXX

NOTE-FILL HEIGHT REFERRED TO IS MEASURED BETWEEN SUBGRADE AND TOP OF TOP SLAB.

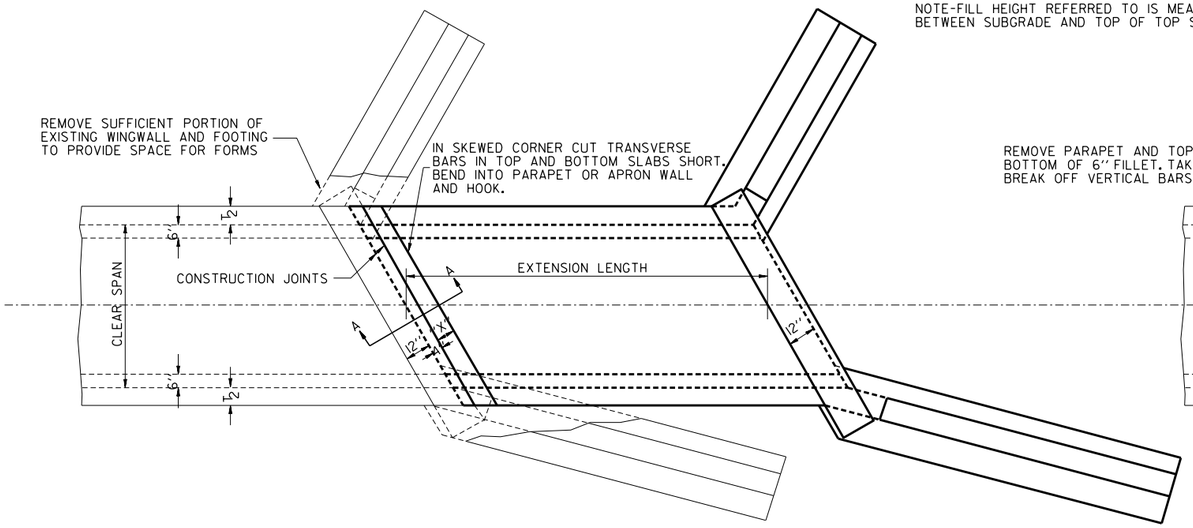

PLAN WHEN FILL IS OVER 4'0" HIGH

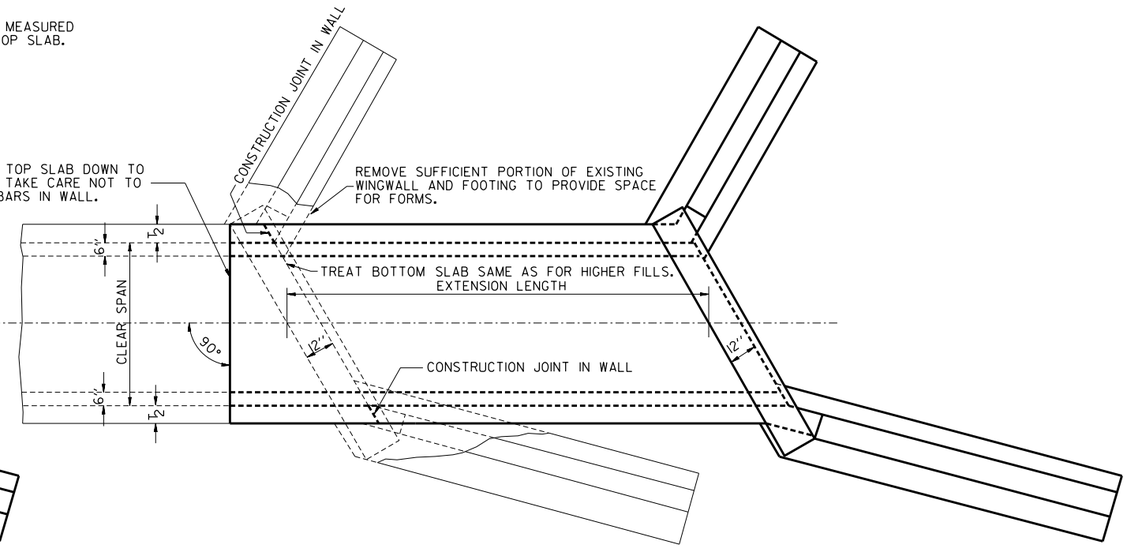

PLAN WHEN FILL IS 4'0" OR LESS IN HEIGHT

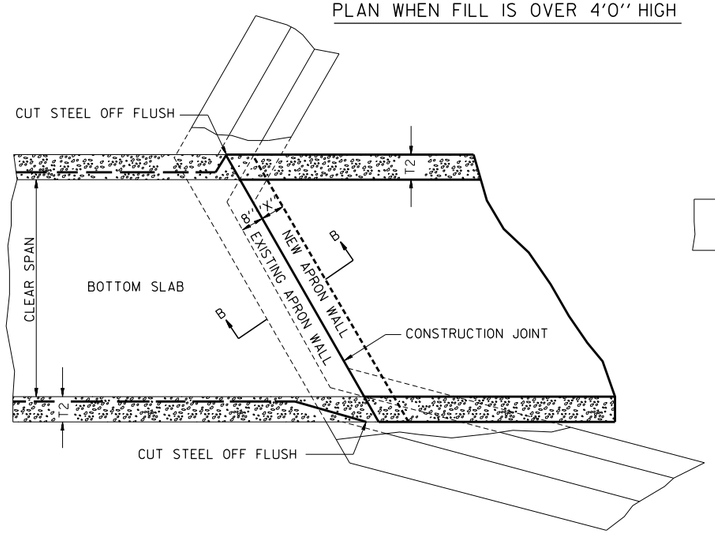

SECTIONAL PLAN AT CONSTRUCTION JOINT
TYPICAL FOR ALL FILL HEIGHTS

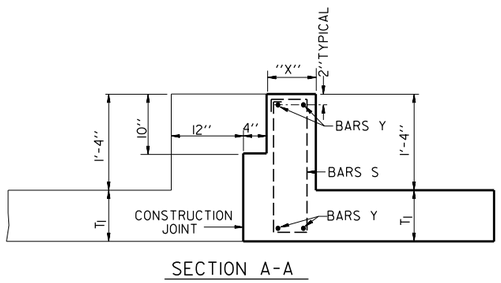

SECTION A-A

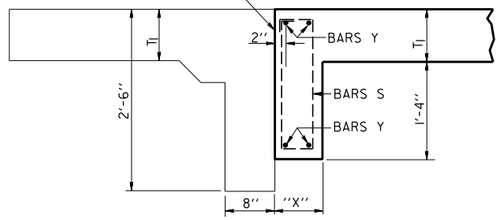

SECTION B-B

CLEAR SPAN	"X"	Y BARS	S BARS
3'-0"	8"	2'-¾" Ø	⅜" Ø AT 16
4'-0"	8"	2'-¾" Ø	⅜" Ø AT 16
5'-0"	8"	2'-¾" Ø	⅜" Ø AT 16
6'-0"	8"	2'-1" Ø	⅜" Ø AT 9
7'-0	8"	2'-1" Ø	½" Ø AT 10
8'-0"	8"	2'-1⅛" Ø	½" Ø AT 7½
9'-0"	11"	3'-1⅛" Ø	½" Ø AT 7
10'-0"	13"	3'-1¼" Ø	½" Ø AT 6

NOTE- HOOK BOTH ENDS OF BARS Y.
NUMBER OF Y BARS SHOWN REQUIRED AT EACH PLACE NOTED ON SECTIONS A & B.
PARAPET AT END OF CULVERT SHALL BE REINFORCED AS SHOWN ON SECTION A-A INSTEAD OF STANDARD REINFORCING.

GENERAL NOTES

ALL CONCRETE SHALL BE CLASS "A"

FOR DETAILS OF EXTENDED PORTION OF CULVERT SEE STANDARD DRAWING REFERRED TO ON SUMMARY SHEET OF PLANS.
EXISTING STRUCTURE SHOWN IN LIGHT LINES.
ADDED PORTION SHOWN IN HEAVY LINES.

GEN. NOTES REV. | 7-28-78 | DATE
R.M.U. | BY

DEPARTMENT OF TRANSPORTATION
STATE OF GEORGIA

STANDARD

DETAILS FOR EXTENDING CONCRETE BOX CULVERTS WITH SKEWS BELOW 75°

NOT TO SCALE | REDRAWN JULY 2024 | JUNE 1955

DES. E.E.L
DRW. E.E.L
TRA. H.L.K.
CHK. R.K.J

(SUBMITTED) C. N. Crocker BRIDGE ENGINEER
(APPROVED) M. L. Hodhum STATE HIGHWAY ENGINEER

NUMBER 2318

STATE	PROJECT NUMBER	SHEET NO.	TOTAL SHEETS
GA.			

CULVERT STANDARDS BY SPAN AND HEIGHT

SIZE (feet) SPAN	SIZE (feet) HEIGHT	SINGLES Standard Number & Sheet	DOUBLES Standard Number & Sheet	TRIPLES Standard Number & Sheet	SIZE (feet) HEIGHT	SIZE (feet) SPAN
4	3	2401-1, 2-A, 3	2402-1, 2-A, 3	2403-1, 2-A, 3	3	4
	4				4	
	5				5	
	6				6	
5	3	2401-1, 2-B, 3	2402-1, 2-B, 3	2403-1, 2-B, 3	3	5
	4				4	
	5	2401-1, 2-C, 3	2402-1, 2-C, 3	2403-1, 2-C, 3	5	
	6				6	
	7				7	
	8				8	
6	3	2401-1, 2-D, 3	2402-1, 2-D, 3	2403-1, 2-D, 3	3	6
	4				4	
	5	2401-1, 2-E, 3	2402-1, 2-E, 3	2403-1, 2-E, 3	5	
	6				6	
	7				7	
	8				8	
7	4	2401-1, 2-F, 3	2402-1, 2-F, 3	2403-1, 2-F, 3	4	7
	5	2401-1, 2-G, 3	2402-1, 2-G, 3	2403-1, 2-G, 3	5	
	6				6	
	7				7	
	8				8	
8	4	2401-1, 2-H, 3	2402-1, 2-H, 3	2403-1, 2-H, 3	4	8
	5				5	
	6				6	
	7	2401-1, 2-I, 3	2402-1, 2-I, 3	2403-1, 2-I, 3	7	
	8				8	
	9				9	
	10				10	
9	4	2401-1, 2-J, 3	2402-1, 2-J, 3	2403-1, 2-J, 3	4	9
	5				5	
	6				6	
	7	2401-1, 2-K, 3	2402-1, 2-K, 3	2403-1, 2-K, 3	7	
	8				8	
	9				9	
	10				10	
10	4	2401-1, 2-L, 3	2402-1, 2-L, 3	2403-1, 2-L, 3	4	10
	5	2401-1, 2-M, 3	2402-1, 2-M, 3	2403-1, 2-M, 3	5	
	6				6	
	7				7	
	8				8	
	9	2401-1, 2-N, 3	2402-1, 2-N, 3	2403-1, 2-N, 3	9	
	10				10	
	11				11	
	12				12	

WINGWALLS AND PARAPETS STANDARDS BY SKEW

SKEW	Standard Number & Sheet
90 DEG	2404-1
75 DEG	2405-1, 2
60 DEG	2405-1, 2
45 DEG	2405-1, 3

APRON STANDARDS

Standard Number & Sheet
2406-1, 2

INDEX OF BOX CULVERTS

STANDARD		INDEX	SHEET	TITLE
SINGLES	2401	2401-1	1 OF 3	REINFORCED CONCRETE SINGLE BOX CULVERT
		2401-2-A	2-A OF 3	4'X3', 4'X4', 4'X5' AND 4'X6'
		2401-2-B	2-B OF 3	5'X3' AND 5'X4'
		2401-2-C	2-C OF 3	5'X5', 5'X6', 5'X7' AND 5'X8'
		2401-2-D	2-D OF 3	6'X3' AND 6'X4'
		2401-2-E	2-E OF 3	6'X5', 6'X6', 6'X7' AND 6'X8'
		2401-2-F	2-F OF 3	7'X4'
		2401-2-G	2-G OF 3	7'X5', 7'X6', 7'X7' AND 7'X8'
		2401-2-H	2-H OF 3	8'X4', 8'X5' AND 8'X6'
		2401-2-I	2-I OF 3	8'X7', 8'X8', 8'X9' AND 8'X10'
		2401-2-J	2-J OF 3	9'X4', 9'X5' AND 9'X6'
		2401-2-K	2-K OF 3	9'X7', 9'X8', 9'X9'AND 9'X10'
		2401-2-L	2-L OF 3	10'X4'
		2401-2-M	2-M OF 3	10'X5'. 10'X6'. 10'X7' AND 10'X8'
		2401-2-N	2-N OF 3	10'X9', 10'X10', 10'XII' AND 10'X12'
		2401-3	3 OF 3	REINFORCED CONCRETE SINGLE BOX CULVERT
DOUBLES	2402	2402-1	1 OF 3	REINFORCED CONCRETE DOUBLE BOX CULVERT
		2402-2-A	2-A OF 3	4'X3', 4'X4', 4'X5' AND 4'X6'
		2402-2-B	2-B OF 3	5'X3' AND 5'X4'
		2402-2-C	2-C OF 3	5'X5', 5'X6', 5'X7' AND 5'X8'
		2402-2-D	2-D OF 3	6'X3' AND 6'X4'
		2402-2-E	2-E OF 3	6'X5', 6'X6', 6'X7' AND 6'X8'
		2402-2-F	2-F OF 3	7'X4'
		2402-2-G	2-G OF 3	7'X5', 7'X6', 7'X7' AND 7'X8'
		2402-2-H	2-H OF 3	8'X4', 8'X5' AND 8'X6'
		2402-2-I	2-I OF 3	8'X7', 8'X8', 8'X9' AND 8'X10'
		2402-2-J	2-J OF 3	9'X4', 9'X5' AND 9'X6'
		2402-2-K	2-K OF 3	9'X7', 9'X8', 9'X9'AND 9'X10'
		2402-2-L	2-L OF 3	10'X4'
		2402-2-M	2-M OF 3	10'X5'. 10'X6'. 10'X7' AND 10'X8'
		2402-2-N	2-N OF 3	10'X9', 10'X10', 10'XII' AND 10'X12'
		2402-3	3 OF 3	REINFORCED CONCRETE DOUBLE BOX CULVERT
TRIPLES	2403	2403-1	1 OF 3	REINFORCED CONCRETE TRIPLE BOX CULVERT
		2403-2-A	2-A OF 3	4'X3', 4'X4', 4'X5' AND 4'X6'
		2403-2-B	2-B OF 3	5'X3' AND 5'X4'
		2403-2-C	2-C OF 3	5'X5', 5'X6', 5'X7' AND 5'X8'
		2403-2-D	2-D OF 3	6'X3' AND 6'X4'
		2403-2-E	2-E OF 3	6'X5', 6'X6', 6'X7' AND 6'X8'
		2403-2-F	2-F OF 3	7'X4'
		2403-2-G	2-G OF 3	7'X5', 7'X6', 7'X7' AND 7'X8'
		2403-2-H	2-H OF 3	8'X4', 8'X5' AND 8'X6'
		2403-2-I	2-I OF 3	8'X7', 8'X8', 8'X9' AND 8'X10'
		2403-2-J	2-J OF 3	9'X4', 9'X5' AND 9'X6'
		2403-2-K	2-K OF 3	9'X7', 9'X8', 9'X9'AND 9'X10'
		2403-2-L	2-L OF 3	10'X4'
		2403-2-M	2-M OF 3	10'X5'. 10'X6'. 10'X7' AND 10'X8'
		2403-2-N	2-N OF 3	10'X9', 10'X10', 10'XII' AND 10'X12'
		2403-3	3 OF 3	REINFORCED CONCRETE TRIPLE BOX CULVERT

INDEX OF WINGWALLS, PARAPETS & APRONS

WINGWALL & PARAPETS	2404	2404-1	1 OF 1	REINF. CONC. WINGWALLS, TOEWALLS AND PARAPETS FOR CONC. BOX CULVERTS
	2405	2405-1	1 OF 3	REINF. CONC. SKEWED WINGWALLS, TOEWALLS AND PARAPETS FOR 75 AND 60 DEGREES SKEWS
		2405-2	2 OF 3	REINF. CONC. SKEWED WINGWALLS, TOEWALLS AND PARAPETS FOR 75 AND 60 DEGREE SKEWS
		2405-3	3 OF 3	REINF. CONC. SKEWED WINGWALLS, TOEWALLS AND PARAPETS FOR 45 DEGREE SKEW
APRONS	2406	2406-1	1 OF 2	CONCRETE BOX CULVERT APRONS AND BAFFLES DETAIL
		2406-2	2 OF 2	CONCRETE BOX CULVERT APRONS AND BAFFLES DETAIL

DEPARTMENT OF TRANSPORTATION
STATE OF GEORGIA

STANDARD

INDEX OF REINFORCED CONCRETE BOX CULVERTS

NO SCALE — SEPTEMBER 2017

DATE | REVISION | BY

DES. FBF
DRW. HAC
TRA. ___
CHK. FBF

(SUBMITTED) STATE DESIGN POLICY ENGINEER
(APPROVED) Margaret B Pirkle CHIEF ENGINEER

NUMBER 2400

STATE	PROJECT NUMBER	SHEET NO.	TOTAL SHEETS
GA.			

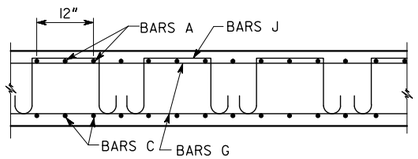

TOP SLAB

NOTE: SPACING OF BARS A AND C IS 6" OR 12". SEE BARREL REINFORCEMENT QUANTITIES AND DIMENSIONS.

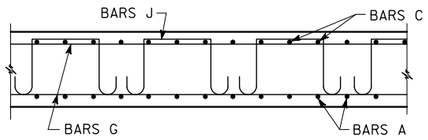

BOTTOM SLAB

NOTE: LONGITUDINAL WINGWALL AND PARAPET BARS EXTEND INTO BARREL. SEE WINGWALL AND PARAPET STANDARDS.

SECTION A-A

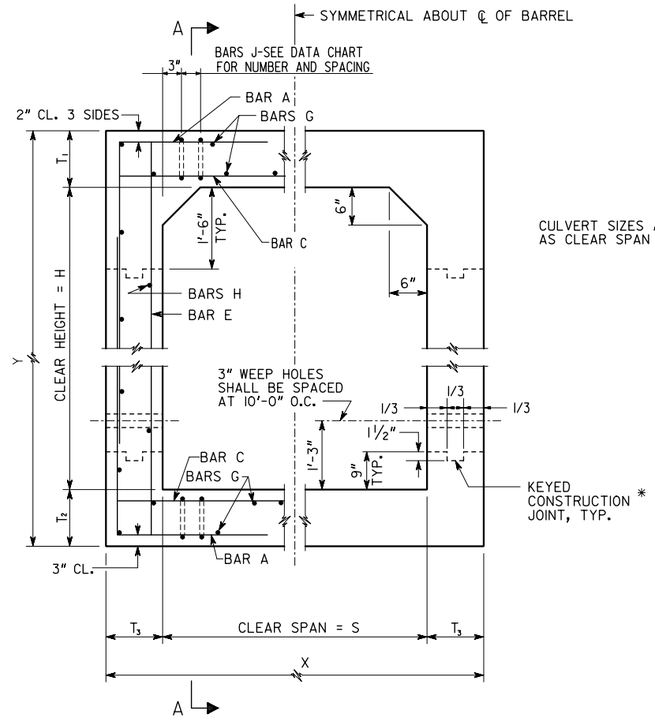

CULVERT SIZES ARE DESIGNATED AS CLEAR SPAN (S) X CLEAR HEIGHT (H).

* AT CONTRACTORS OPTION, THE LOWER CONSTRUCTION JOINT IN THE BARREL WALL MAY BE SHIFTED TO 6" ABOVE THE TOP OF THE BOTTOM SLAB.

TYPICAL BARREL SECTION-ALL DESIGNS

DESIGN	1	2	3	4	5	6	7	8
MAXIMUM FILL HEIGHT	10'	20'	30'	40'	50'	60'	70'	80'

1) MINIMUM HEIGHT FROM TOP OF CULVERT TO BOTTOM OF BASE WITHIN TRAVELWAY SHALL BE 1'-0".

2) DESIGN OF THE CULVERT SHALL BE DETERMINED BY THE MAXIMUM HEIGHT OF FILL WITH ONLY A SINGLE DESIGN BEING USED FOR THE ENTIRE INSTALLATION.

3) TRANSVERSE CONSTRUCTION JOINTS SHALL BE PLACED NORMAL TO THE CENTERLINE OF THE CULVERT AT THE OUTSIDE SHOULDER BREAK POINTS. THE MAXIMUM POUR LENGTH ALONG THE LENGTH OF THE CULVERT SHALL NOT EXCEED 40'-0" FOR DESIGNS 1 TO 3 AND 30'-0" FOR DESIGNS 4 AND ABOVE.

4) LONGITUDINAL BARREL REINFORCEMENT STEEL IN THE TRANSVERSE CONSTRUCTION JOINTS SHALL EXTEND THROUGH JOINTS.

5) CONSTRUCTION JOINTS SHALL BE WATERPROOFED ON THE EXTERIOR TOP AND SIDES OF BARREL IN ACCORDANCE WITH SECTION 530 OF GEORGIA STANDARD SPECIFICATIONS. WATERFPROOFING SHALL BE APPLIED WHEN CONCRETE IS AT LEAST 7 DAYS OLD. ALL COSTS ASSOCIATED WITH WATERPROOFING SHALL BE INCLUDED IN OTHER ITEMS AND WILL NOT BE MEASURED SEPARATELY FOR PAYMENT.

FOR BAR DIMENSIONS SEE BAR REINFORCEMENT DETAILS. NUMBER OF J BARS SHOWN IN DATA CHART IS THE NUMBER PER CORNER IN ANY ONE TRANSVERSE PLANE. THE TOTAL NUMBER OF J BARS REQUIRED DEPENDS UPON THE LENGTH OF THE SECTION.

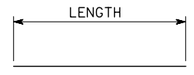

TYPE 1

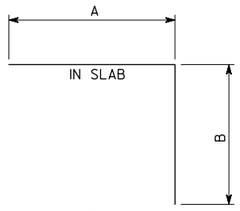

TYPE 3

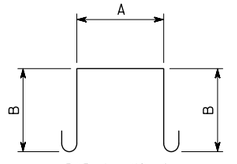

TYPE 6

A = 12"+ DIAMETER BAR A + 1"
B = T_1 - 3"

GENERAL NOTES

1) SPECIFICATIONS: GEORGIA STANDARD, CURRENT EDITION & SUPPLEMENTS THERETO.

2) ALL CONCRETE SHALL BE CLASS "AA".

3) CHAMFER ALL EXPOSED EDGES ¾".

4) COST OF DRAIN PIPES, WEEP HOLES, COARSE AGGREGATE, AND ANY OTHER INCIDENTAL ITEMS SHALL BE INCLUDED IN THE PRICE BID FOR CONTRACT ITEMS.

5) CONSTRUCTION JOINTS IN BARREL WALLS ARE REQUIRED.

6) FOR DETAILS OF WINGWALLS AND PARAPETS SEE "REINFORCED CONCRETE WINGWALLS, TOEWALLS AND PARAPETS FOR CONCRETE BOX CULVERTS" SHEETS.

DESIGN DATA

SPECIFICATIONS - AASHTO LRFD BRIDGE DESIGN SPECIFICATIONS, 7TH EDITION, 2014.
TYPICAL HL-93 LOADING.

DEPARTMENT OF TRANSPORTATION
STATE OF GEORGIA

STANDARD

REINFORCED CONCRETE SINGLE BOX CULVERT

NO SCALE — SEPTEMBER 2017

DATE | REVISION | BY

DES. YSK
DRW. FGS
TRA. ___
CHK. JWB

(SUBMITTED) STATE DESIGN POLICY ENGINEER
(APPROVED) Margaret B Pitts CHIEF ENGINEER

NUMBER 2401
SHEET 1 OF 3

STATE	PROJECT NUMBER	SHEET NO.	TOTAL SHEETS
GA.			

SINGLE 4'-0" X 3'-0" BOX CULVERT

BARREL REINFORCEMENT QUANTITIES AND DIMENSIONS

DESIGN	1	2	3	4	5	6	7	8
BAR A	401A @ 12"	501A @ 12"	401A @ 6"	401A @ 6"	402A @ 6"			
BAR C	501@ 12"	408 @ 6"	408 @ 6"	501@ 6"	502 @ 6"			
BAR E	403 @ 12"	403 @ 12"	403 @ 12"	403 @ 12"	404 @ 12"			
BAR G IN 2 SLABS	16 - 401	16 - 401	16 - 401	16 - 401	16 - 401			
BAR H IN 2 WALLS	10 - 402	10 - 402	10 - 402	10 - 402	10 - 402			
BAR J IN EXT. CORNER	0	0	0	3-401B @ 4½"	3-403B @ 5"			
T_1	8"	8"	8"	8"	9"			
T_2	9"	9"	9"	9"	10"			
T_3	8"	8"	8"	8"	9"			
X	5'-4"	5'-4"	5'-4"	5'-4"	5'-6"			
Y	4'-5"	4'-5"	4'-5"	4'-5"	4'-7"			
YD^3 CLASS AA CONCRETE/FT	0.437	0.437	0.437	0.437	0.498			
LB BAR REINF STEEL/FT	44.9	54.5	59.7	79.7	82.2			
PARAPET, BARREL END, AND TOEWALL QUANTITIES - 90° SKEW - TOTAL								
YD^3 CLASS AA CONCRETE	1.9	1.9	1.9	1.9	2.0			
LB BAR REINF STEEL	391	391	391	391	393			
PARAPET, BARREL END, AND TOEWALL QUANTITIES - 75° SKEW - TOTAL								
YD^3 CLASS AA CONCRETE	2.1	2.1	2.1	2.1	2. 2			
LB BAR REINF STEEL	482	482	482	482	487			
PARAPET, BARREL END, AND TOEWALL QUANTITIES - 60° SKEW - TOTAL								
YD^3 CLASS AA CONCRETE	2.3	2.3	2.3	2.3	2.4			
LB BAR REINF STEEL	511	511	511	511	516			
PARAPET, BARREL END, AND TOEWALL QUANTITIES - 45° SKEW - TOTAL								
YD^3 CLASS AA CONCRETE	2.9	2.9	2.9	2.9	3.0			
LB BAR REINF STEEL	593	593	593	593	600			

SINGLE 4'-0" X 4'-0" BOX CULVERT

BARREL REINFORCEMENT QUANTITIES AND DIMENSIONS

DESIGN	1	2	3	4	5	6	7	8
BAR A	408A @ 12"	505A @ 12"	405A @ 6"	405A @ 6"	407A @ 6"			
BAR C	408 @ 6"	408 @ 6"	408 @ 6"	501@ 6"	502 @ 6"			
BAR E	408 @ 12"	408 @ 12"	408 @ 12"	408 @ 12"	409 @ 12"			
BAR G IN 2 SLABS	16 - 401	16 - 401	16 - 401	16 - 401	16 - 401			
BAR H IN 2 WALLS	12 - 402	12 - 402	12 - 402	12 - 402	12 - 402			
BAR J IN EXT. CORNER	0	0	0	3-401B @ 4½"	3-403B @ 5"			
T_1	8"	8"	8"	8"	9"			
T_2	9"	9"	9"	9"	10"			
T_3	8"	8"	8"	8"	9"			
X	5'-4"	5'-4"	5'-4"	5'-4"	5'-6"			
Y	5'-5"	5'-5"	5'-5"	5'-5"	5'-7"			
YD^3 CLASS AA CONCRETE/FT	0.487	0.487	0.487	0.487	0.554			
LB BAR REINF. STEEL/FT	53.7	61.7	67.7	87.7	90.2			
PARAPET, BARREL END, AND TOEWALL QUANTITIES - 90° SKEW - TOTAL								
YD^3 CLASS AA CONCRETE	2.2	2.2	2.2	2.2	2.3			
LB BAR REINF STEEL	420	420	420	420	422			
PARAPET, BARREL END, AND TOEWALL QUANTITIES - 75° SKEW - TOTAL								
YD^3 CLASS AA CONCRETE	2.3	2.3	2.3	2.3	2.5			
LB BAR REINF STEEL	512	512	512	512	517			
PARAPET, BARREL END, AND TOEWALL QUANTITIES - 60° SKEW - TOTAL								
YD^3 CLASS AA CONCRETE	2.6	2.6	2.6	2.6	2.7			
LB BAR REINF STEEL	540	540	540	540	546			
PARAPET, BARREL END, AND TOEWALL QUANTITIES - 45° SKEW - TOTAL								
YD^3 CLASS AA CONCRETE	3.3	3.3	3.3	3.3	3.4			
LB BAR REINF STEEL	623	623	623	623	630			

SINGLE 4'-0" X 5'-0" BOX CULVERT

BARREL REINFORCEMENT QUANTITIES AND DIMENSIONS

DESIGN	1	2	3	4	5	6	7	8
BAR A	422A @ 12"	511A @ 12"	413A @ 6"	413A @ 6"	415A @ 6"			
BAR C	408 @ 6"	408 @ 6"	501@ 6"	501@ 6"	502 @ 6"			
BAR E	414 @ 12"	414 @ 12"	503 @ 12"	503 @ 12"	504 @ 12"			
BAR G IN 2 SLABS	16 - 401	16 - 401	16 - 401	16 - 401	16 - 401			
BAR H IN 2 WALLS	14 - 402	14 - 402	14 - 402	14 - 402	14 - 402			
BAR J IN EXT. CORNER	0	0	0	3-401B @ 4½"	3-403B @ 5"			
T_1	8"	8"	8"	8"	9"			
T_2	9"	9"	9"	9"	10"			
T_3	8"	8"	8"	8"	9"			
X	5'-4"	5'-4"	5'-4"	5'-4"	5'-6"			
Y	6'-5"	6'-5"	6'-5"	6'-5"	6'-7"			
YD^3 CLASS AA CONCRETE/FT	0.536	0.536	0.536	0.536	0.610			
LB BAR REINF STEEL/FT	61.5	69.6	88.6	101.1	103.7			
PARAPET, BARREL END, AND TOEWALL QUANTITIES - 90° SKEW - TOTAL								
YD^3 CLASS AA CONCRETE	2.3	2.3	2.3	2.3	2.4			
LB BAR REINF STEEL	444	444	444	444	446			
PARAPET, BARREL END, AND TOEWALL QUANTITIES - 75° SKEW - TOTAL								
YD^3 CLASS AA CONCRETE	2.4	2.4	2.4	2.4	2.6			
LB BAR REINF STEEL	537	537	537	537	541			
PARAPET, BARREL END, AND TOEWALL QUANTITIES - 60° SKEW - TOTAL								
YD^3 CLASS AA CONCRETE	2.7	2.7	2.7	2.7	2.9			
LB BAR REINF STEEL	565	565	565	565	571			
PARAPET, BARREL END, AND TOEWALL QUANTITIES - 45° SKEW - TOTAL								
YD^3 CLASS AA CONCRETE	3.4	3.4	3.4	3.4	3.6			
LB BAR REINF STEEL	649	649	649	649	656			

SINGLE 4'-0" X 6'-0" BOX CULVERT

BARREL REINFORCEMENT QUANTITIES AND DIMENSIONS

DESIGN	1	2	3	4	5	6	7	8
BAR A	435A @ 12"	427A @ 6"	427A @ 6"	522A @ 6"	524A @ 6"			
BAR C	408 @ 6"	408 @ 6"	408 @ 6"	501@ 6"	502 @ 6"			
BAR E	420 @ 12"	505 @ 12"	505 @ 12"	420 @ 6"	603 @ 12"			
BAR G IN 2 SLABS	16 - 401	16 - 401	16 - 401	16 - 401	16 - 401			
BAR H IN 2 WALLS	18 - 402	18 - 402	18 - 402	18 - 402	18 - 402			
BAR J IN EXT. CORNER	0	0	0	3-402B @ 4½"	3-404B @ 5"			
T_1	8"	8"	8"	8"	9"			
T_2	9"	9"	9"	9"	10"			
T_3	8"	8"	8"	8"	9"			
X	5'-4"	5'-4"	5'-4"	5'-4"	5'-6"			
Y	7'-5"	7'-5"	7'-5"	7'-5"	7'-7"			
YD^3 CLASS AA CONCRETE/FT	0.585	0.585	0.585	0.585	0.665			
LB BAR REINF. STEEL/FT	69.0	93.9	93.9	143.0	147.9			
PARAPET, BARREL END, AND TOEWALL QUANTITIES - 90° SKEW - TOTAL								
YD^3 CLASS AA CONCRETE	2.4	2.4	2.4	2.4	2.6			
LB BAR REINF STEEL	492	492	492	492	494			
PARAPET, BARREL END, AND TOEWALL QUANTITIES - 75° SKEW - TOTAL								
YD^3 CLASS AA CONCRETE	2.5	2.5	2.5	2.5	2.7			
LB BAR REINF STEEL	586	586	586	586	590			
PARAPET, BARREL END, AND TOEWALL QUANTITIES - 60° SKEW - TOTAL								
YD^3 CLASS AA CONCRETE	2.8	2.8	2.8	2.8	3.0			
LB BAR REINF STEEL	615	615	615	615	620			
PARAPET, BARREL END, AND TOEWALL QUANTITIES - 45° SKEW - TOTAL								
YD^3 CLASS AA CONCRETE	3.5	3.5	3.5	3.5	3.7			
LB BAR REINF STEEL	700	700	700	700	707			

DEPARTMENT OF TRANSPORTATION
STATE OF GEORGIA

STANDARD

REINFORCED CONCRETE SINGLE BOX CULVERT 4'X3', 4'X4', 4'X5' AND 4'X6'

NO SCALE — SEPTEMBER 2017

DATE | REVISION | BY

DES. YSK
DRW. FGS
TRA. ____
CHK. JWB

(SUBMITTED) STATE DESIGN POLICY ENGINEER
(APPROVED) Margaret B Pirkle CHIEF ENGINEER

NUMBER 2401

SHEET 2A OF 3

STATE	PROJECT NUMBER	SHEET NO.	TOTAL SHEETS
GA.			

SINGLE 5′-0″ X 3′-0″ BOX CULVERT

BARREL REINFORCEMENT QUANTITIES AND DIMENSIONS

DESIGN	1	2	3	4	5	6	7	8
BAR A	502A @ 12″	403A @ 6″	404A @ 6″	503A @ 6″	504A @ 6″			
BAR C	414 @ 6″	414 @ 6″	504 @ 6″	601 @ 6″	602 @ 6″			
BAR E	403 @ 12″	403 @ 12″	404 @ 12″	404 @ 12″	405 @ 12″			
BAR G IN 2 SLABS	18 - 401	18 - 401	20 - 401	20 - 401	20 - 401			
BAR H IN 2 WALLS	10 - 402	10 - 402	10 - 402	10 - 402	10 - 402			
BAR J IN EXT. CORNER	0	0	3-403B @ 5″	4-404B @ 5″	4-407B @ 5¾″			
T_1	8″	8″	9″	9″	10″			
T_2	9″	9″	10″	10″	11″			
T_3	8″	8″	9″	9″	10″			
X	6′-4″	6′-4″	6′-6″	6′-6″	6′-8″			
Y	4′-5″	4′-5″	4′-7″	4′-7″	4′-9″			
YD³ CLASS AA CONCRETE/FT	0.490	0.490	0.557	0.557	0.627			
LB BAR REINF STEEL/FT	60.6	66.4	91.7	122.7	126.2			
PARAPET, BARREL END, AND TOEWALL QUANTITIES - 90° SKEW - TOTAL								
YD³ CLASS AA CONCRETE	2.3	2.3	2.4	2.4	2.5			
LB BAR REINF STEEL	432	432	453	453	455			
PARAPET, BARREL END, AND TOEWALL QUANTITIES - 75° SKEW - TOTAL								
YD³ CLASS AA CONCRETE	2.4	2.4	2.5	2.5	2.6			
LB BAR REINF STEEL	536	536	560	560	564			
PARAPET, BARREL END, AND TOEWALL QUANTITIES - 60° SKEW - TOTAL								
YD³ CLASS AA CONCRETE	2.7	2.7	2.8	2.8	2.9			
LB BAR REINF STEEL	569	569	593	593	598			
PARAPET, BARREL END, AND TOEWALL QUANTITIES - 45° SKEW - TOTAL								
YD³ CLASS AA CONCRETE	3.3	3.3	3.5	3.5	3.6			
LB BAR REINF STEEL	659	659	685	685	691			

SINGLE 5′-0″ X 4′-0″ BOX CULVERT

BARREL REINFORCEMENT QUANTITIES AND DIMENSIONS

DESIGN	1	2	3	4	5	6	7	8
BAR A	507A @ 12″	410A @ 6″	411A @ 6″	411A @ 6″	510A @ 6″			
BAR C	414 @ 6″	414 @ 6″	504 @ 6″	601@ 6″	602 @ 6″			
BAR E	408 @ 12″	408 @ 12″	409 @ 12″	409 @ 12″	410 @ 12″			
BAR G IN 2 SLABS	18 - 401	18 - 401	20 - 401	20 - 401	20 - 401			
BAR H IN 2 WALLS	12 - 402	12 - 402	12 - 402	12 - 402	12 - 402			
BAR J IN EXT. CORNER	0	0	3-403B @ 5″	4-403B @ 5″	4-407B @ 5¾″			
T_1	8″	8″	9″	9″	10″			
T_2	9″	9″	10″	10″	11″			
T_3	8″	8″	9″	9″	10″			
X	6′-4″	6′-4″	6′-6″	6′-6″	6′-8″			
Y	5′-5″	5′-5″	5′-7″	5′-7″	5′-9″			
YD³ CLASS AA CONCRETE/FT	0.539	0.539	0.613	0.613	0.688			
LB BAR REINF STEEL/FT	67.4	74.4	99.7	115.4	137.2			
PARAPET, BARREL END, AND TOEWALL QUANTITIES - 90° SKEW - TOTAL								
YD³ CLASS AA CONCRETE	2.6	2.6	2.7	2.7	2.8			
LB BAR REINF STEEL	461	461	483	483	485			
PARAPET, BARREL END, AND TOEWALL QUANTITIES - 75° SKEW - TOTAL								
YD³ CLASS AA CONCRETE	2.7	2.7	2.8	2.8	2.9			
LB BAR REINF STEEL	567	567	591	591	595			
PARAPET, BARREL END, AND TOEWALL QUANTITIES - 60° SKEW - TOTAL								
YD³ CLASS AA CONCRETE	3.0	3.0	3.2	3.2	3.3			
LB BAR REINF STEEL	599	599	624	624	629			
PARAPET, BARREL END, AND TOEWALL QUANTITIES - 45° SKEW - TOTAL								
YD³ CLASS AA CONCRETE	3.8	3.8	3.9	3.9	4.1			
LB BAR REINF STEEL	690	690	717	717	723			

BY	REVISION	DATE

DEPARTMENT OF TRANSPORTATION
STATE OF GEORGIA

STANDARD

REINFORCED CONCRETE
SINGLE BOX CULVERT
5′X3′ AND 5′X′4′

NO SCALE — SEPTEMBER 2017

DES. YSK
DRW. FGS
TRA. ___
CHK. JWB

(SUBMITTED) STATE DESIGN POLICY ENGINEER

(APPROVED) Margaret B Pirkle
CHIEF ENGINEER

NUMBER 2401

SHEET 2B OF 3

STATE	PROJECT NUMBER	SHEET NO.	TOTAL SHEETS
GA.			

SINGLE 5'-0" X 5'-0" BOX CULVERT

BARREL REINFORCEMENT QUANTITIES AND DIMENSIONS

DESIGN	1	2	3	4	5	6	7	8
BAR A	513A @ 12"	417A @ 6"	418A @ 6"	514A @ 6"	516A @ 6"			
BAR C	414 @ 6"	503 @ 6"	504 @ 6"	601@ 6"	602 @ 6"			
BAR E	414 @ 12"	414 @ 12"	415 @ 12"	415 @ 12"	416 @ 12"			
BAR G IN 2 SLABS	18 - 401	18 - 401	20 - 401	20 - 401	20 - 401			
BAR H IN 2 WALLS	14 - 402	14 - 402	14 - 402	14 - 402	14 - 402			
BAR J IN EXT. CORNER	0	0	3-403B @ 5"	4-404B @ 5"	4-407B @ 5 3/4"			
T_1	8"	8"	9"	9"	10"			
T_2	9"	9"	10"	10"	11"			
T_3	8"	8"	9"	9"	10"			
X	6'-4"	6'-4"	6'-6"	6'-6"	6'-8"			
Y	6'-5"	6'-5"	6'-7"	6'-7"	6'-9"			
YD³CLASS AA CONCRETE/FT	0.588	0.588	0.668	0.668	0.750			
LB BAR REINF STEEL/FT	74.6	91.4	107.7	144.7	148.3			
PARAPET, BARREL END, AND TOEWALL QUANTITIES - 90° SKEW - TOTAL								
YD³CLASS AA CONCRETE	2.7	2.7	2.8	2.8	2.9			
LB BAR REINF STEEL	485	485	507	507	509			
PARAPET, BARREL END, AND TOEWALL QUANTITIES - 75° SKEW - TOTAL								
YD³CLASS AA CONCRETE	2.8	2.8	2.9	2.9	3.1			
LB BAR REINF STEEL	591	591	615	615	620			
PARAPET, BARREL END, AND TOEWALL QUANTITIES - 60° SKEW - TOTAL								
YD³CLASS AA CONCRETE	3.1	3.1	3.3	3.3	3.4			
LB BAR REINF STEEL	624	624	649	649	654			
PARAPET, BARREL END, AND TOEWALL QUANTITIES - 45° SKEW - TOTAL								
YD³CLASS AA CONCRETE	3.9	3.9	4.1	4.1	4.3			
LB BAR REINF STEEL	716	716	742	742	749			

SINGLE 5'-0" X 7'-0" BOX CULVERT

BARREL REINFORCEMENT QUANTITIES AND DIMENSIONS

DESIGN	1	2	3	4	5	6	7	8
BAR A	546A @ 12"	439A @ 6"	533A @ 6"	536A @ 6"	537A @ 6"			
BAR C	503 @ 6"	503 @ 6"	504 @ 6"	601 @ 6"	602 @ 6"			
BAR E	509 @ 12"	509 @ 12"	427 @ 6"	607 @ 12"	702 @ 12"			
BAR G IN 2 SLABS	18 - 401	18 - 401	20 - 401	20 - 401	20 - 401			
BAR H IN 2 WALLS	20 - 402	20 - 402	20 - 402	20 - 402	20 - 402			
BAR J IN EXT. CORNER	0	0	2-404B @ 5"	4-404B @ 5"	4-407B @ 5 3/4"			
T_1	8"	8"	9"	9"	10"			
T_2	9"	9"	10"	10"	11"			
T_3	8"	8"	9"	9"	10"			
X	6'-4"	6'-4"	6'-6"	6'-6"	6'-8"			
Y	8'-5"	8'-5"	8'-7"	8'-7"	8'-9"			
YD³CLASS AA CONCRETE/FT	0.687	0.687	0.779	0.779	0.873			
LB BAR REINF STEEL/FT	110.6	116.5	161.7	185.2	197.3			
PARAPET, BARREL END, AND TOEWALL QUANTITIES - 90° SKEW - TOTAL								
YD³CLASS AA CONCRETE	2.9	2.9	3.0	3.0	3.2			
LB BAR REINF STEEL	558	558	580	580	582			
PARAPET, BARREL END, AND TOEWALL QUANTITIES - 75° SKEW - TOTAL								
YD³CLASS AA CONCRETE	3.0	3.0	3.2	3.2	3.4			
LB BAR REINF STEEL	665	665	690	690	694			
PARAPET, BARREL END, AND TOEWALL QUANTITIES - 60° SKEW - TOTAL								
YD³CLASS AA CONCRETE	3.4	3.4	3.6	3.6	3.7			
LB BAR REINF STEEL	699	699	724	724	729			
PARAPET, BARREL END, AND TOEWALL QUANTITIES - 45° SKEW - TOTAL								
YD³CLASS AA CONCRETE	4.2	4.2	4.4	4.4	4.6			
LB BAR REINF STEEL	793	793	820	820	826			

SINGLE 5'-0" X 6'-0" BOX CULVERT

BARREL REINFORCEMENT QUANTITIES AND DIMENSIONS

DESIGN	1	2	3	4	5	6	7	8
BAR A	532A @ 12"	425A @ 6"	426A @ 6"	520A @ 6"	523A @ 6"			
BAR C	414 @ 6"	503 @ 6"	504 @ 6"	601@ 6"	602 @ 6"			
BAR E	420 @ 12"	505 @ 12"	506 @ 12"	506 @ 12"	507 @ 12"			
BAR G IN 2 SLABS	18 - 401	18 - 401	20 - 401	20 - 401	20 - 401			
BAR H IN 2 WALLS	18 - 402	18 - 402	18 - 402	18 - 402	18 - 402			
BAR J IN EXT. CORNER	0	0	3-403B @ 5"	4-404B @ 5"	4-406B @ 5 3/4"			
T_1	8"	8"	9"	9"	10"			
T_2	9"	9"	10"	10"	11"			
T_3	8"	8"	9"	9"	10"			
X	6'-4"	6'-4"	6'-6"	6'-6"	6'-8"			
Y	7'-5"	7'-5"	7'-7"	7'-7"	7'-9"			
YD³CLASS AA CONCRETE/FT	0.638	0.638	0.724	0.724	0.812			
LB BAR REINF STEEL/FT	88.4	106.0	122.5	162.5	166.1			
PARAPET, BARREL END, AND TOEWALL QUANTITIES - 90° SKEW - TOTAL								
YD³CLASS AA CONCRETE	2.8	2.8	2.9	2.9	3.1			
LB BAR REINF STEEL	533	533	555	555	558			
PARAPET, BARREL END, AND TOEWALL QUANTITIES - 75° SKEW - TOTAL								
YD³CLASS AA CONCRETE	2.9	2.9	3.1	3.1	3.2			
LB BAR REINF STEEL	640	640	664	664	669			
PARAPET, BARREL END, AND TOEWALL QUANTITIES - 60° SKEW - TOTAL								
YD³CLASS AA CONCRETE	3.3	3.3	3.4	3.4	3.6			
LB BAR REINF STEEL	674	674	698	698	703			
PARAPET, BARREL END, AND TOEWALL QUANTITIES - 45° SKEW - TOTAL								
YD³CLASS AA CONCRETE	4.0	4.0	4.2	4.2	4.4			
LB BAR REINF STEEL	767	767	793	793	800			

SINGLE 5'-0" X 8'-0" BOX CULVERT

BARREL REINFORCEMENT QUANTITIES AND DIMENSIONS

DESIGN	1	2	3	4	5	6	7	8
BAR A	456A @ 6"	458A @ 6"	560A @ 6"	619A @ 6"	618A @ 6"			
BAR C	503 @ 6"	503 @ 6"	504 @ 6"	601@ 6"	602 @ 6"			
BAR E	515 @ 12"	432 @ 6"	705 @ 12"	801 @ 12"	802 @ 12"			
BAR G IN 2 SLABS	18 - 401	18 - 401	20 - 401	18 - 401	20 - 401			
BAR H IN 2 WALLS	22 - 402	22 - 402	22 - 402	22 - 402	22 - 402			
BAR J IN EXT. CORNER	0	0	3-404B @ 5"	4-405B @ 5"	4-408B @ 5 3/4"			
T_1	8"	8"	9"	9"	10"			
T_2	9"	9"	10"	10"	11"			
T_3	8"	8"	9"	9"	10"			
X	6'-4"	6'-4"	6'-6"	6'-6"	6'-8"			
Y	9'-5"	9'-5"	9'-7"	9'-7"	9'-9"			
YD³CLASS AA CONCRETE/FT	0.737	0.737	0.835	0.835	0.935			
LB BAR REINF STEEL/FT	130.6	136.8	201.1	268.6	272.7			
PARAPET, BARREL END, AND TOEWALL QUANTITIES - 90° SKEW - TOTAL								
YD³CLASS AA CONCRETE	3.0	3.0	3.2	3.2	3.4			
LB BAR REINF STEEL	583	583	605	585	607			
PARAPET, BARREL END, AND TOEWALL QUANTITIES - 75° SKEW - TOTAL								
YD³CLASS AA CONCRETE	3.2	3.2	3.4	3.4	3.5			
LB BAR REINF STEEL	691	691	715	696	720			
PARAPET, BARREL END, AND TOEWALL QUANTITIES - 60° SKEW - TOTAL								
YD³CLASS AA CONCRETE	3.6	3.6	3.7	3.7	3.9			
LB BAR REINF STEEL	725	725	750	730	755			
PARAPET, BARREL END, AND TOEWALL QUANTITIES - 45° SKEW - TOTAL								
YD³CLASS AA CONCRETE	4.4	4.4	4.6	4.6	4.9			
LB BAR REINF STEEL	820	820	846	827	853			

DEPARTMENT OF TRANSPORTATION
STATE OF GEORGIA

STANDARD

REINFORCED CONCRETE
SINGLE BOX CULVERT
5'X5', 5'X6', 5'X7' AND 5'X8'

NO SCALE — SEPTEMBER 2017

DATE | REVISION | BY

DES. YSK
DRW. EGS
TRA. ____
CHK. JWB

(SUBMITTED) _____ STATE DESIGN POLICY ENGINEER
(APPROVED) Margaret B Pirkle CHIEF ENGINEER

NUMBER 2401
SHEET 2C OF 3

STATE	PROJECT NUMBER	SHEET NO.	TOTAL SHEETS
GA.			

SINGLE 6′-0″ X 3′-0″ BOX CULVERT

BARREL REINFORCEMENT QUANTITIES AND DIMENSIONS

DESIGN	1	2	3	4	5	6	7	8
BAR A	406A @ 6″	409A @ 6″	506A @ 6″	508A @ 6″	509A @ 6″			
BAR C	505 @ 6″	506 @ 6″	507 @ 6″	605 @ 6″	606 @ 6″			
BAR E	403 @ 12″	404 @ 12″	405 @ 12″	406 @ 12″	407 @ 12″			
BAR G IN 2 SLABS	22 - 401	22 - 401	22 - 401	22 - 401	24 - 401			
BAR H IN 2 WALLS	10 - 402	10 - 402	10 - 402	10 - 402	10 - 402			
BAR J IN EXT. CORNER	0	0	3-407B @ 5¾″	3-409B @ 6¼″	4-410B @ 7″			
T_1	8″	9″	10″	11″	12″			
T_2	9″	10″	11″	12″	13″			
T_3	8″	9″	10″	11″	12″			
X	7′-4″	7′-6″	7′-8″	7′-10″	8′-0″			
Y	4′-5″	4′-7″	4′-9″	4′-11″	5′-1″			
YD³CLASS AA CONCRETE/FT	0.542	0.616	0.691	0.769	0.849			
LB BAR REINF STEEL/FT	84.9	86.7	119.6	136.4	146.1			
PARAPET, BARREL END, AND TOEWALL QUANTITIES - 90° SKEW - TOTAL								
YD³CLASS AA CONCRETE	2.6	2.7	2.8	2.9	3.0			
LB BAR REINF STEEL	492	494	496	498	519			
PARAPET, BARREL END, AND TOEWALL QUANTITIES - 75° SKEW - TOTAL								
YD³CLASS AA CONCRETE	2.7	2.8	2.9	3.0	3.1			
LB BAR REINF STEEL	610	614	618	623	645			
PARAPET, BARREL END, AND TOEWALL QUANTITIES - 60° SKEW - TOTAL								
YD³CLASS AA CONCRETE	3.0	3.1	3.3	3.4	3.5			
LB BAR REINF STEEL	646	651	656	661	684			
PARAPET, BARREL END, AND TOEWALL QUANTITIES - 45° SKEW - TOTAL								
YD³CLASS AA CONCRETE	3.8	3.9	4.1	4.2	4.3			
LB BAR REINF STEEL	745	751	758	764	789			

SINGLE 6′-0″ X 4′-0″ BOX CULVERT

BARREL REINFORCEMENT QUANTITIES AND DIMENSIONS

DESIGN	1	2	3	4	5	6	7	8
BAR A	412A @ 6″	414A @ 6″	416A @ 6″	512A @ 6″	515A @ 6″			
BAR C	505 @ 6″	506 @ 6″	507 @ 6″	605 @ 6″	606 @ 6″			
BAR E	408 @ 12″	409 @ 12″	410 @ 12″	411@ 12″	412 @ 12″			
BAR G IN 2 SLABS	22 - 401	22 - 401	22 - 401	22 - 401	24 - 401			
BAR H IN 2 WALLS	12 - 402	12 - 402	12 - 402	12 - 402	12 - 402			
BAR J IN EXT. CORNER	2-401B @ 4½″	0	3-406B @ 5¾″	3-409B @ 6¼″	4-410B @ 7″			
T_1	8″	9″	10″	11″	12″			
T_2	9″	10″	11″	12″	13″			
T_3	8″	9″	10″	11″	12″			
X	7′-4″	7′-6″	7′-8″	7′-10″	8′-0″			
Y	5′-5″	5′-7″	5′-9″	5′-11″	6′-1″			
YD³CLASS AA CONCRETE/FT	0.592	0.671	0.753	0.837	0.923			
LB BAR REINF STEEL/FT	101.2	94.7	110.4	147.4	157.1			
PARAPET, BARREL END, AND TOEWALL QUANTITIES - 90° SKEW - TOTAL								
YD³CLASS AA CONCRETE	2.9	3.1	3.2	3.3	3.4			
LB BAR REINF STEEL	522	525	527	529	550			
PARAPET, BARREL END, AND TOEWALL QUANTITIES - 75° SKEW - TOTAL								
YD³CLASS AA CONCRETE	3.1	3.2	3.3	3.4	3.6			
LB BAR REINF STEEL	641	645	650	654	677			
PARAPET, BARREL END, AND TOEWALL QUANTITIES - 60° SKEW - TOTAL								
YD³CLASS AA CONCRETE	3.4	3.6	3.7	3.8	4.0			
LB BAR REINF STEEL	677	682	687	692	716			
PARAPET, BARREL END, AND TOEWALL QUANTITIES - 45° SKEW - TOTAL								
YD³CLASS AA CONCRETE	4.3	4.4	4.6	4.8	4.9			
LB BAR REINF STEEL	777	784	790	797	822			

DEPARTMENT OF TRANSPORTATION
STATE OF GEORGIA

STANDARD

REINFORCED CONCRETE SINGLE BOX CULVERT 6′X3′ AND 6′X4′

NO SCALE — SEPTEMBER 2017

DATE | REVISION | BY

DES. YSK
DRW. FGS
TRA. ___
CHK. JWB

(SUBMITTED) STATE DESIGN POLICY ENGINEER
(APPROVED) Margaret B Pirkle CHIEF ENGINEER

NUMBER 2401

SHEET 2D OF 3

STATE	PROJECT NUMBER	SHEET NO.	TOTAL SHEETS
GA.			

SINGLE 6'-0" X 5'-0" BOX CULVERT

BARREL REINFORCEMENT QUANTITIES AND DIMENSIONS

DESIGN	1	2	3	4	5	6	7	8
BAR A	421A @ 6"	423A @ 6"	424A @ 6"	519A @ 6"	521A @ 6"			
BAR C	505 @ 6"	506 @ 6"	604 @ 6"	605 @ 6"	606 @ 6"			
BAR E	414 @ 12"	415 @ 12"	416 @ 12"	417 @ 12"	418 @ 12"			
BAR G IN 2 SLABS	22 - 401	22 - 401	22 - 401	22 - 401	24 - 401			
BAR H IN 2 WALLS	14 - 402	14 - 402	14 - 402	14 - 402	14 - 402			
BAR J IN EXT. CORNER	2-401B @ 4½"	0	3-406B @ 5¾"	4-409B @ 6¼"	4-410B @ 7"			
T_1	8"	9"	10"	11"	12"			
T_2	9"	10"	11"	12"	13"			
T_3	8"	9"	10"	11"	12"			
X	7'-4"	7'-6"	7'-8"	7'-10"	8'-0"			
Y	6'-5"	6'-7"	6'-9"	6'-11"	7'-1"			
YD³ CLASS AA CONCRETE/FT	0.641	0.727	0.815	0.905	0.997			
LB BAR REINF STEEL/FT	109.3	102.7	131.8	163.3	168.1			
PARAPET, BARREL END, AND TOEWALL QUANTITIES - 90° SKEW - TOTAL								
YD³ CLASS AA CONCRETE	3.0	3.2	3.3	3.4	3.6			
LB BAR REINF STEEL	546	549	551	553	574			
PARAPET, BARREL END, AND TOEWALL QUANTITIES - 75° SKEW - TOTAL								
YD³ CLASS AA CONCRETE	3.2	3.3	3.4	3.6	3.7			
LB BAR REINF STEEL	665	670	674	679	702			
PARAPET, BARREL END, AND TOEWALL QUANTITIES - 60° SKEW - TOTAL								
YD³ CLASS AA CONCRETE	3.6	3.7	3.8	4.0	4.2			
LB BAR REINF STEEL	702	707	712	717	741			
PARAPET, BARREL END, AND TOEWALL QUANTITIES - 45° SKEW - TOTAL								
YD³ CLASS AA CONCRETE	4.4	4.6	4.8	5.0	5.2			
LB BAR REINF STEEL	803	809	816	822	848			

SINGLE 6'-0" X 6'-0" BOX CULVERT

BARREL REINFORCEMENT QUANTITIES AND DIMENSIONS

DESIGN	1	2	3	4	5	6	7	8
BAR A	432A @ 6"	433A @ 6"	434A @ 6"	529A @ 6"	530A @ 6"			
BAR C	505 @ 6"	506 @ 6"	604 @ 6"	605 @ 6"	701 @ 6"			
BAR E	420 @ 12"	421 @ 12"	422 @ 12"	423 @ 12"	508 @ 12"			
BAR G IN 2 SLABS	22 - 401	22 - 401	22 - 401	22 - 401	24 - 401			
BAR H IN 2 WALLS	18 - 402	18 - 402	18 - 402	18 - 402	18 - 402			
BAR J IN EXT. CORNER	2-401B @ 4½"	0	3-406B @ 5¾"	4-409B @ 6¼"	4-410B @ 6¾"			
T_1	8"	9"	10"	11"	12"			
T_2	9"	10"	11"	12"	13"			
T_3	8"	9"	10"	11"	12"			
X	7'-4"	7'-6"	7'-8"	7'-10"	8'-0"			
Y	7'-5"	7'-7"	7'-9"	7'-11"	8'-1"			
YD³ CLASS AA CONCRETE/FT	0.690	0.782	0.877	0.973	1.071			
LB BAR REINF STEEL/FT	118.6	112.1	141.2	175.6	202.8			
PARAPET, BARREL END, AND TOEWALL QUANTITIES - 90° SKEW - TOTAL								
YD³ CLASS AA CONCRETE	3.1	3.3	3.4	3.6	3.7			
LB BAR REINF STEEL	595	597	599	601	622			
PARAPET, BARREL END, AND TOEWALL QUANTITIES - 75° SKEW - TOTAL								
YD³ CLASS AA CONCRETE	3.3	3.4	3.6	3.7	3.9			
LB BAR REINF STEEL	715	719	723	728	751			
PARAPET, BARREL END, AND TOEWALL QUANTITIES - 60° SKEW - TOTAL								
YD³ CLASS AA CONCRETE	3.7	3.8	4.0	4.2	4.3			
LB BAR REINF STEEL	752	757	762	767	791			
PARAPET, BARREL END, AND TOEWALL QUANTITIES - 45° SKEW - TOTAL								
YD³ CLASS AA CONCRETE	4.5	4.7	4.9	5.2	5.4			
LB BAR REINF STEEL	854	861	867	873	899			

SINGLE 6'-0" X 7'-0" BOX CULVERT

BARREL REINFORCEMENT QUANTITIES AND DIMENSIONS

DESIGN	1	2	3	4	5	6	7	8
BAR A	452A @ 6"	443A @ 6"	540A @ 6"	542A @ 6"	543A @ 6"			
BAR C	505 @ 6"	506 @ 6"	604 @ 6"	605 @ 6"	701 @ 6"			
BAR E	426 @ 12"	510 @ 12"	511 @ 12"	512 @ 12"	513 @ 12"			
BAR G IN 2 SLABS	22 - 401	22 - 401	22 - 401	22 - 401	24 - 401			
BAR H IN 2 WALLS	20 - 402	20 - 402	20 - 402	20 - 402	20 - 402			
BAR J IN EXT. CORNER	2-401B @ 4½"	0	3-407B @ 5¾"	4-409B @ 6¼"	4-410B @ 6¾"			
T_1	8"	9"	10"	11"	12"			
T_2	9"	10"	11"	12"	13"			
T_3	8"	9"	10"	11"	12"			
X	7'-4"	7'-6"	7'-8"	7'-10"	8'-0"			
Y	8'-5"	8'-7"	8'-9"	8'-11"	9'-1"			
YD³ CLASS AA CONCRETE/FT	0.740	0.838	0.938	1.041	1.145			
LB BAR REINF STEEL/FT	133.7	126.2	184.8	193.0	214.6			
PARAPET, BARREL END, AND TOEWALL QUANTITIES - 90° SKEW - TOTAL								
YD³ CLASS AA CONCRETE	3.3	3.4	3.6	3.7	3.9			
LB BAR REINF STEEL	619	621	624	626	647			
PARAPET, BARREL END, AND TOEWALL QUANTITIES - 75° SKEW - TOTAL								
YD³ CLASS AA CONCRETE	3.4	3.6	3.7	3.9	4.1			
LB BAR REINF STEEL	740	744	749	753	776			
PARAPET, BARREL END, AND TOEWALL QUANTITIES - 60° SKEW - TOTAL								
YD³ CLASS AA CONCRETE	3.8	4.0	4.2	4.3	4.5			
LB BAR REINF STEEL	777	782	788	793	816			
PARAPET, BARREL END, AND TOEWALL QUANTITIES - 45° SKEW - TOTAL								
YD³ CLASS AA CONCRETE	4.7	4.9	5.2	5.4	5.6			
LB BAR REINF STEEL	880	887	893	900	925			

SINGLE 6'-0" X 8'-0" BOX CULVERT

BARREL REINFORCEMENT QUANTITIES AND DIMENSIONS

DESIGN	1	2	3	4	5	6	7	8
BAR A	460A @ 6"	451A @ 6"	550A @ 6"	552A @ 6"	553A @ 6"			
BAR C	505 @ 6"	506 @ 6"	604 @ 6"	605 @ 6"	701 @ 6"			
BAR E	515 @ 12"	516 @ 12"	434 @ 6"	610 @ 12"	706 @ 12"			
BAR G IN 2 SLABS	22 - 401	22 - 401	22 - 401	22 - 401	24 - 401			
BAR H IN 2 WALLS	22 - 402	22 - 402	22 - 402	22 - 402	22 - 402			
BAR J IN EXT. CORNER	3-401B @ 4½"	0	3-407B @ 5¾"	4-409B @ 6¼"	4-410B @ 6¾"			
T_1	8"	9"	10"	11"	12"			
T_2	9"	10"	11"	12"	13"			
T_3	8"	9"	10"	11"	12"			
X	7'-4"	7'-6"	7'-8"	7'-10"	8'-0"			
Y	9'-5"	9'-7"	9'-9"	9'-11"	10'-1"			
YD³ CLASS AA CONCRETE/FT	0.789	0.894	1.000	1.109	1.219			
LB BAR REINF STEEL/FT	152.7	135.4	202.0	213.5	245.7			
PARAPET, BARREL END, AND TOEWALL QUANTITIES - 90° SKEW - TOTAL								
YD³ CLASS AA CONCRETE	3.4	3.6	3.7	3.9	4.1			
LB BAR REINF STEEL	645	647	649	651	672			
PARAPET, BARREL END, AND TOEWALL QUANTITIES - 75° SKEW - TOTAL								
YD³ CLASS AA CONCRETE	3.6	3.7	3.9	4.1	4.3			
LB BAR REINF STEEL	766	770	774	779	802			
PARAPET, BARREL END, AND TOEWALL QUANTITIES - 60° SKEW - TOTAL								
YD³ CLASS AA CONCRETE	4.0	4.2	4.4	4.6	4.8			
LB BAR REINF STEEL	804	809	814	819	843			
PARAPET, BARREL END, AND TOEWALL QUANTITIES - 45° SKEW - TOTAL								
YD³ CLASS AA CONCRETE	4.9	5.2	5.4	5.6	5.9			
LB BAR REINF STEEL	907	914	920	927	952			

DEPARTMENT OF TRANSPORTATION
STATE OF GEORGIA

STANDARD

REINFORCED CONCRETE
SINGLE BOX CULVERT
6'X5', 6'X6', 6'X7' AND 6'X8'

NO SCALE — SEPTEMBER 2017

DATE | REVISION | BY

DES. YSK
DRW. EGS
TRA. ____
CHK. JWB

(SUBMITTED) STATE DESIGN POLICY ENGINEER
(APPROVED) Margaret B Pirkle CHIEF ENGINEER

NUMBER 2401
SHEET 2E OF 3

STATE	PROJECT NUMBER	SHEET NO.	TOTAL SHEETS
GA.			

SINGLE 7'-0" X 4'-0" BOX CULVERT

BARREL REINFORCEMENT QUANTITIES AND DIMENSIONS

DESIGN	1	2	3	4	5	6	7	8
BAR A	419A @ 6"	420A @ 6"	517A @ 6"	518A @ 6"	601A @ 6"			
BAR C	510 @ 6"	511 @ 6"	608 @ 6"	609 @ 6"	704 @ 6"			
BAR E	409 @ 12"	410 @ 12"	411@ 12"	412 @ 12"	413 @ 12"			
BAR G IN 2 SLABS	24 - 401	24 - 401	24 - 401	24 - 401	24 - 401			
BAR H IN 2 WALLS	12 - 402	12 - 402	12 - 402	12 - 402	12 - 402			
BAR J IN EXT. CORNER	2-403B @ 5"	0	3-409B @ 6¼"	4-410B @ 7"	4-411B @ 7½"			
T_1	9"	10"	11"	12"	13"			
T_2	10"	11"	12"	13"	14"			
T_3	9"	10"	11"	12"	13"			
X	8'-6"	8'-8"	8'-10"	9'-0"	9'-2"			
Y	5'-7"	5'-9"	5'-11"	6'-1"	6'-3"			
YD^3 CLASS AA CONCRETE/FT	0.730	0.818	0.908	1.000	1.094			
LB BAR REINF STEEL/FT	111.7	104.7	158.9	167.3	218.5			
PARAPET, BARREL END, AND TOEWALL QUANTITIES - 90° SKEW - TOTAL								
YD^3 CLASS AA CONCRETE	3.4	3.5	3.6	3.8	3.9			
LB BAR REINF STEEL	565	567	569	571	573			
PARAPET, BARREL END, AND TOEWALL QUANTITIES - 75° SKEW - TOTAL								
YD^3 CLASS AA CONCRETE	3.6	3.7	3.8	3.9	4.1			
LB BAR REINF STEEL	699	703	707	711	716			
PARAPET, BARREL END, AND TOEWALL QUANTITIES - 60° SKEW - TOTAL								
YD^3 CLASS AA CONCRETE	4.0	4.1	4.3	4.4	4.5			
LB BAR REINF STEEL	740	745	750	754	759			
PARAPET, BARREL END, AND TOEWALL QUANTITIES - 45° SKEW - TOTAL								
YD^3 CLASS AA CONCRETE	4.9	5.1	5.3	5.5	5.6			
LB BAR REINF STEEL	850	856	862	869	875			

BY	DATE	REVISION

DEPARTMENT OF TRANSPORTATION
STATE OF GEORGIA

STANDARD

REINFORCED CONCRETE
SINGLE BOX CULVERT
7'X4'

NO SCALE — SEPTEMBER 2017

DES. YSK
DRW. EGS
TRA. ____
CHK. JWB

(SUBMITTED) STATE DESIGN POLICY ENGINEER
(APPROVED) Margaret B Pirkle CHIEF ENGINEER

NUMBER 2401

STATE	PROJECT NUMBER	SHEET NO.	TOTAL SHEETS
GA.			

SINGLE 7'-0" X 5'-0" BOX CULVERT

BARREL REINFORCEMENT QUANTITIES AND DIMENSIONS

DESIGN	1	2	3	4	5	6	7	8
BAR A	428A @ 6"	430A @ 6"	525A @ 6"	527A @ 6"	603A @ 6"			
BAR C	510 @ 6"	511 @ 6"	608 @ 6"	703 @ 6"	704 @ 6"			
BAR E	415 @ 12"	416 @ 12"	417 @ 12"	418 @ 12"	419 @ 12"			
BAR G IN 2 SLABS	24 - 401	24 - 401	24 - 401	24 - 401	24 - 401			
BAR H IN 2 WALLS	14 - 402	14 - 402	14 - 402	14 - 402	14 - 402			
BAR J IN EXT. CORNER	2-403B @ 5"	0	3-409B @ 6¼"	4-410B @ 6¾"	4-411B @ 7½"			
T_1	9"	10"	11"	12"	13"			
T_2	10"	11"	12"	13"	14"			
T_3	9"	10"	11"	12"	13"			
X	8'-6"	8'-8"	8'-10"	9'-0"	9'-2"			
Y	6'-7"	6'-9"	6'-11"	7'-1"	7'-3"			
YD^3 CLASS AA CONCRETE/FT	0.785	0.880	0.976	1.074	1.174			
LB BAR REINF STEEL/FT	119.7	112.7	169.9	197.1	233.1			
PARAPET, BARREL END, AND TOEWALL QUANTITIES - 90° SKEW - TOTAL								
YD^3 CLASS AA CONCRETE	3.5	3.6	3.8	3.9	4.1			
LB BAR REINF STEEL	589	591	593	595	597			
PARAPET, BARREL END, AND TOEWALL QUANTITIES - 75° SKEW - TOTAL								
YD^3 CLASS AA CONCRETE	3.7	3.8	4.0	4.1	4.2			
LB BAR REINF STEEL	724	728	732	736	740			
PARAPET, BARREL END, AND TOEWALL QUANTITIES - 60° SKEW - TOTAL								
YD^3 CLASS AA CONCRETE	4.1	4.3	4.4	4.6	4.7			
LB BAR REINF STEEL	765	770	774	779	784			
PARAPET, BARREL END, AND TOEWALL QUANTITIES - 45° SKEW - TOTAL								
YD^3 CLASS AA CONCRETE	5.1	5.3	5.5	5.7	5.9			
LB BAR REINF STEEL	876	882	888	894	901			

SINGLE 7'-0" X 6'-0" BOX CULVERT

BARREL REINFORCEMENT QUANTITIES AND DIMENSIONS

DESIGN	1	2	3	4	5	6	7	8
BAR A	437A @ 6"	440A @ 6"	534A @ 6"	538A @ 6"	607A @ 6"			
BAR C	510 @ 6"	511 @ 6"	608 @ 6"	703 @ 6"	704 @ 6"			
BAR E	421 @ 12"	422 @ 12"	423 @ 12"	424 @ 12"	425 @ 12"			
BAR G IN 2 SLABS	24 - 401	24 - 401	24 - 401	24 - 401	24 - 401			
BAR H IN 2 WALLS	18 - 402	18 - 402	18 - 402	18 - 402	18 - 402			
BAR J IN EXT. CORNER	2-403B @ 5"	2-406B @ 5¾"	3-409B @ 6¼"	4-410B @ 6¾"	4-411B @ 7½"			
T_1	9"	10"	11"	12"	13"			
T_2	10"	11"	12"	13"	14"			
T_3	9"	10"	11"	12"	13"			
X	8'-6"	8'-8"	8'-10"	9'-0"	9'-2"			
Y	7'-7"	7'-9"	7'-11"	8'-1"	8'-3"			
YD^3 CLASS AA CONCRETE/FT	0.841	0.941	1.044	1.148	1.255			
LB BAR REINF STEEL/FT	129.0	131.3	182.3	209.4	249.2			
PARAPET, BARREL END, AND TOEWALL QUANTITIES - 90° SKEW - TOTAL								
YD^3 CLASS AA CONCRETE	3.6	3.8	3.9	4.1	4.2			
LB BAR REINF STEEL	637	639	641	643	645			
PARAPET, BARREL END, AND TOEWALL QUANTITIES - 75° SKEW - TOTAL								
YD^3 CLASS AA CONCRETE	3.8	3.9	4.1	4.3	4.4			
LB BAR REINF STEEL	773	777	781	785	789			
PARAPET, BARREL END, AND TOEWALL QUANTITIES - 60° SKEW - TOTAL								
YD^3 CLASS AA CONCRETE	4.2	4.4	4.6	4.7	4.9			
LB BAR REINF STEEL	815	819	824	829	834			
PARAPET, BARREL END, AND TOEWALL QUANTITIES - 45° SKEW - TOTAL								
YD^3 CLASS AA CONCRETE	5.3	5.5	5.7	5.9	6.1			
LB BAR REINF STEEL	927	933	939	946	952			

SINGLE 7'-0" X 7'-0" BOX CULVERT

BARREL REINFORCEMENT QUANTITIES AND DIMENSIONS

DESIGN	1	2	3	4	5	6	7	8
BAR A	445A @ 6"	448A @ 6"	545A @ 6"	548A @ 6"	613A @ 6"			
BAR C	510 @ 6"	511 @ 6"	608 @ 6"	703 @ 6"	704 @ 6"			
BAR E	427 @ 12"	428 @ 12"	429 @ 12"	513 @ 12"	514 @ 12"			
BAR G IN 2 SLABS	24 - 401	24 - 401	24 - 401	24 - 401	24 - 401			
BAR H IN 2 WALLS	20 - 402	20 - 402	20 - 402	20 - 402	20 - 402			
BAR J IN EXT. CORNER	2-403B @ 5"	2-406B @ 5¾"	3-409B @ 6¼"	4-410B @ 6¾"	4-411B @ 7½"			
T_1	9"	10"	11"	12"	13"			
T_2	10"	11"	12"	13"	14"			
T_3	9"	10"	11"	12"	13"			
X	8'-6"	8'-8"	8'-10"	9'-0"	9'-2"			
Y	8'-7"	8'-9"	8'-11"	9'-1"	9'-3"			
YD^3 CLASS AA CONCRETE/FT	0.897	1.003	1.112	1.222	1.335			
LB BAR REINF STEEL/FT	137.1	139.3	193.3	227.0	270.5			
PARAPET, BARREL END, AND TOEWALL QUANTITIES - 90° SKEW - TOTAL								
YD^3 CLASS AA CONCRETE	3.8	3.9	4.1	4.2	4.4			
LB BAR REINF STEEL	662	664	666	668	670			
PARAPET, BARREL END, AND TOEWALL QUANTITIES - 75° SKEW - TOTAL								
YD^3 CLASS AA CONCRETE	3.9	4.1	4.3	4.4	4.6			
LB BAR REINF STEEL	798	802	806	810	815			
PARAPET, BARREL END, AND TOEWALL QUANTITIES - 60° SKEW - TOTAL								
YD^3 CLASS AA CONCRETE	4.4	4.6	4.8	4.9	5.1			
LB BAR REINF STEEL	840	845	850	855	859			
PARAPET, BARREL END, AND TOEWALL QUANTITIES - 45° SKEW - TOTAL								
YD^3 CLASS AA CONCRETE	5.4	5.7	5.9	6.1	6.4			
LB BAR REINF STEEL	953	959	966	972	978			

SINGLE 7'-0" X 8'-0" BOX CULVERT

BARREL REINFORCEMENT QUANTITIES AND DIMENSIONS

DESIGN	1	2	3	4	5	6	7	8
BAR A	466A @ 6"	555A @ 6"	557A @ 6"	559A @ 6"	621A @ 6"			
BAR C	607 @ 6"	511 @ 6"	608 @ 6"	703 @ 6"	704 @ 6"			
BAR E	516 @ 12"	517 @ 12"	518 @ 12"	436 @ 6"	437 @ 6"			
BAR G IN 2 SLABS	24 - 401	24 - 401	24 - 401	24 - 401	24 - 401			
BAR H IN 2 WALLS	22 - 402	22 - 402	22 - 402	22 - 402	22 - 402			
BAR J IN EXT. CORNER	2-403B @ 5"	0	3-409B @ 6¼"	4-410B @ 6¾"	4-411B @ 7½"			
T_1	9"	10"	11"	12"	13"			
T_2	10"	11"	12"	13"	14"			
T_3	9"	10"	11"	12"	13"			
X	8'-6"	8'-8"	8'-10"	9'-0"	9'-2"			
Y	9'-7"	9'-9"	9'-11"	10'-1"	10'-3"			
YD^3 CLASS AA CONCRETE/FT	0.952	1.065	1.180	1.296	1.415			
LB BAR REINF STEEL/FT	174.5	178.8	211.4	244.4	291.7			
PARAPET, BARREL END, AND TOEWALL QUANTITIES - 90° SKEW - TOTAL								
YD^3 CLASS AA CONCRETE	3.9	4.1	4.3	4.4	4.6			
LB BAR REINF STEEL	687	689	691	693	695			
PARAPET, BARREL END, AND TOEWALL QUANTITIES - 75° SKEW - TOTAL								
YD^3 CLASS AA CONCRETE	4.1	4.3	4.5	4.6	4.8			
LB BAR REINF STEEL	824	828	832	836	840			
PARAPET, BARREL END, AND TOEWALL QUANTITIES - 60° SKEW - TOTAL								
YD^3 CLASS AA CONCRETE	4.6	4.8	5.0	5.2	5.4			
LB BAR REINF STEEL	866	871	876	881	886			
PARAPET, BARREL END, AND TOEWALL QUANTITIES - 45° SKEW - TOTAL								
YD^3 CLASS AA CONCRETE	5.7	5.9	6.2	6.4	6.7			
LB BAR REINF STEEL	980	986	992	999	1005			

DEPARTMENT OF TRANSPORTATION
STATE OF GEORGIA

STANDARD

REINFORCED CONCRETE
SINGLE BOX CULVERT
7'X5', 7'X6', 7'X7' AND 7'X8'

NO SCALE — SEPTEMBER 2017

DATE | REVISION | BY

DES. YSK
DRW. FGS
TRA. ____
CHK. JWB

(SUBMITTED) STATE DESIGN POLICY ENGINEER
(APPROVED) Margaret B Pirkle CHIEF ENGINEER

NUMBER 2401
SHEET 2G OF 3

STATE	PROJECT NUMBER	SHEET NO.	TOTAL SHEETS
GA.			

SINGLE 8'-0" X 4'-0" BOX CULVERT

BARREL REINFORCEMENT QUANTITIES AND DIMENSIONS

DESIGN	1	2	3	4	5	6	7	8
BAR A	429A @ 6"	431A @ 6"	526A @ 6"	602A @ 6"	604A @ 6"			
BAR C	706 @ 12"	520 @ 6"	611@ 6"	612 @ 6"	708 @ 6"			
BAR E	412 @ 12"	413 @ 12"	414 @ 12"	415 @ 12"	416 @ 12"			
BAR G IN 2 SLABS	28 - 401	28 - 401	28 - 401	28 - 401	28 - 401			
BAR H IN 2 WALLS	12 - 402	12 - 402	12 - 402	12 - 402	12 - 402			
BAR J IN EXT. CORNER	0	0	3-412B @ 8½"	3-414B @ 9½"	3-416B @ 10"			
T_1	12"	13"	14"	15"	16"			
T_2	13"	14"	15"	16"	17"			
T_3	12"	13"	14"	15"	16"			
X	10'-0"	10'-2"	10'-4"	10'-6"	10'-8"			
Y	6'-1"	6'-3"	6'-5"	6'-7"	6'-9"			
YD^3 CLASS AA CONCRETE/FT	1.077	1.177	1.280	1.384	1.491			
LB BAR REINF STEEL/FT	117.0	119.6	181.6	216.5	242.8			
PARAPET, BARREL END, AND TOEWALL QUANTITIES - 90° SKEW - TOTAL								
YD^3 CLASS AA CONCRETE	4.1	4.3	4.4	4.5	4.7			
LB BAR REINF STEEL	631	633	635	636	638			
PARAPET, BARREL END, AND TOEWALL QUANTITIES - 75° SKEW - TOTAL								
YD^3 CLASS AA CONCRETE	4.3	4.5	4.6	4.7	4.9			
LB BAR REINF STEEL	785	789	793	797	801			
PARAPET, BARREL END, AND TOEWALL QUANTITIES - 60° SKEW - TOTAL								
YD^3 CLASS AA CONCRETE	4.8	5.0	5.1	5.3	5.4			
LB BAR REINF STEEL	832	836	841	845	850			
PARAPET, BARREL END, AND TOEWALL QUANTITIES - 45° SKEW - TOTAL								
YD^3 CLASS AA CONCRETE	6.0	6.1	6.3	6.5	6.7			
LB BAR REINF STEEL	955	961	967	973	979			

SINGLE 8'-0" X 5'-0" BOX CULVERT

BARREL REINFORCEMENT QUANTITIES AND DIMENSIONS

DESIGN	1	2	3	4	5	6	7	8
BAR A	438A @ 6"	441A @ 6"	535A @ 6"	539A @ 6"	608A @ 6"			
BAR C	706 @ 12"	520 @ 6"	611 @ 6"	707 @ 6"	708 @ 6"			
BAR E	418 @ 12"	419 @ 12"	420 @ 12"	421 @ 12"	422 @ 12"			
BAR G IN 2 SLABS	28 - 401	28 - 401	28 - 401	28 - 401	28 - 401			
BAR H IN 2 WALLS	14 - 402	14 - 402	14 - 402	14 - 402	14 - 402			
BAR J IN EXT. CORNER	0	0	3-412B @ 8½"	3-413B @ 9"	3-416B @ 10"			
T_1	12"	13"	14"	15"	16"			
T_2	13"	14"	15"	16"	17"			
T_3	12"	13"	14"	15"	16"			
X	10'-0"	10'-2"	10'-4"	10'-6"	10'-8"			
Y	7'-1"	7'-3"	7'-5"	7'-7"	7'-9"			
YD^3 CLASS AA CONCRETE/FT	1.151	1.258	1.366	1.477	1.590			
LB BAR REINF STEEL/FT	125.0	127.6	192.6	218.0	257.4			
PARAPET, BARREL END, AND TOEWALL QUANTITIES - 90° SKEW - TOTAL								
YD^3 CLASS AA CONCRETE	4.3	4.4	4.6	4.7	4.9			
LB BAR REINF STEEL	655	657	659	661	662			
PARAPET, BARREL END, AND TOEWALL QUANTITIES - 75° SKEW - TOTAL								
YD^3 CLASS AA CONCRETE	4.5	4.6	4.8	4.9	5.1			
LB BAR REINF STEEL	809	813	817	821	825			
PARAPET, BARREL END, AND TOEWALL QUANTITIES - 60° SKEW - TOTAL								
YD^3 CLASS AA CONCRETE	5.0	5.2	5.3	5.5	5.7			
LB BAR REINF STEEL	857	861	866	870	875			
PARAPET, BARREL END, AND TOEWALL QUANTITIES - 45° SKEW - TOTAL								
YD^3 CLASS AA CONCRETE	6.2	6.4	6.6	6.8	7.0			
LB BAR REINF STEEL	980	986	992	998	1004			

SINGLE 8'-0" X 6'-0" BOX CULVERT

BARREL REINFORCEMENT QUANTITIES AND DIMENSIONS

DESIGN	1	2	3	4	5	6	7	8
BAR A	446A @ 6"	449A @ 6"	547A @ 6"	549A @ 6"	614A @ 6"			
BAR C	706 @ 12"	520 @ 6"	611@ 6"	707 @ 6"	708 @ 6"			
BAR E	424 @ 12"	425 @ 12"	426 @ 12"	427 @ 12"	428 @ 12"			
BAR G IN 2 SLABS	28 - 401	28 - 401	28 - 401	28 - 401	28 - 401			
BAR H IN 2 WALLS	18 - 402	18 - 402	18 - 402	18 - 402	18 - 402			
BAR J IN EXT. CORNER	0	0	3-412B @ 8½"	3-413B @ 9"	3-416B @ 10"			
T_1	12"	13"	14"	15"	16"			
T_2	13"	14"	15"	16"	17"			
T_3	12"	13"	14"	15"	16"			
X	10'-0"	10'-2"	10'-4"	10'-6"	10'-8"			
Y	8'-1"	8'-3"	8'-5"	8'-7"	8'-9"			
YD^3 CLASS AA CONCRETE/FT	1.225	1.338	1.453	1.569	1.688			
LB BAR REINF STEEL/FT	134.4	137.0	205.0	230.3	273.5			
PARAPET, BARREL END, AND TOEWALL QUANTITIES - 90° SKEW - TOTAL								
YD^3 CLASS AA CONCRETE	4.4	4.6	4.7	4.9	5.1			
LB BAR REINF STEEL	703	705	707	709	710			
PARAPET, BARREL END, AND TOEWALL QUANTITIES - 75° SKEW - TOTAL								
YD^3 CLASS AA CONCRETE	4.6	4.8	4.9	5.1	5.3			
LB BAR REINF STEEL	859	863	866	870	874			
PARAPET, BARREL END, AND TOEWALL QUANTITIES - 60° SKEW - TOTAL								
YD^3 CLASS AA CONCRETE	5.2	5.3	5.5	5.7	5.9			
LB BAR REINF STEEL	906	911	916	920	925			
PARAPET, BARREL END, AND TOEWALL QUANTITIES - 45° SKEW - TOTAL								
YD^3 CLASS AA CONCRETE	6.4	6.6	6.8	7.0	7.3			
LB BAR REINF STEEL	1031	1038	1044	1050	1056			

DEPARTMENT OF TRANSPORTATION
STATE OF GEORGIA

STANDARD

REINFORCED CONCRETE SINGLE BOX CULVERT 8'X4', 8'X5' AND 8'X6'

NO SCALE — SEPTEMBER 2017

DATE / REVISION / BY

DES. YSK
DRW. FGS
TRA. ___
CHK. JWB

(SUBMITTED) STATE DESIGN POLICY ENGINEER

(APPROVED) Margaret B Pirkle CHIEF ENGINEER

NUMBER 2401

SHEET 2H OF 3

STATE	PROJECT NUMBER	SHEET NO.	TOTAL SHEETS
GA.			

SINGLE 8'-0" X 7'-0" BOX CULVERT

BARREL REINFORCEMENT QUANTITIES AND DIMENSIONS

DESIGN	1	2	3	4	5	6	7	8
BAR A	454A @ 6"	457A @ 6"	558A @ 6"	561A @ 6"	622A @ 6"			
BAR C	706 @ 12"	520 @ 6"	611@ 6"	707 @ 6"	708 @ 6"			
BAR E	430 @ 12"	431@ 12"	432 @ 12"	433 @ 12"	434 @ 12"			
BAR G IN 2 SLABS	28 - 401	28 - 401	28 - 401	28 - 401	28 - 401			
BAR H IN 2 WALLS	20 - 402	20 - 402	20 - 402	20 - 402	20 - 402			
BAR J IN EXT. CORNER	0	0	3-412B @ 8½"	3-413B @ 9"	4-416B @ 10"			
T_1	12"	13"	14"	15"	16"			
T_2	13"	14"	15"	16"	17"			
T_3	12"	13"	14"	15"	16"			
X	10'-0"	10'-2"	10'-4"	10'-6"	10'-8"			
Y	9'-1"	9'-3"	9'-5"	9'-7"	9'-9"			
YD^3CLASS AA CONCRETE/FT	1.299	1.418	1.539	1.662	1.787			
LB BAR REINF STEEL/FT	142.4	145.0	216.0	241.3	294.1			
PARAPET, BARREL END, AND TOEWALL QUANTITIES - 90° SKEW - TOTAL								
YD^3CLASS AA CONCRETE	4.6	4.8	4.9	5.1	5.3			
LB BAR REINF STEEL	728	730	732	733	735			
PARAPET, BARREL END, AND TOEWALL QUANTITIES - 75° SKEW - TOTAL								
YD^3CLASS AA CONCRETE	4.8	5.0	5.2	5.3	5.5			
LB BAR REINF STEEL	884	888	892	896	900			
PARAPET, BARREL END, AND TOEWALL QUANTITIES - 60° SKEW - TOTAL								
YD^3CLASS AA CONCRETE	5.4	5.6	5.8	6.0	6.1			
LB BAR REINF STEEL	932	937	941	946	950			
PARAPET, BARREL END, AND TOEWALL QUANTITIES - 45° SKEW - TOTAL								
YD^3CLASS AA CONCRETE	6.6	6.9	7.1	7.3	7.6			
LB BAR REINF STEEL	1058	1064	1070	1076	1082			

SINGLE 8'-0" X 8'-0" BOX CULVERT

BARREL REINFORCEMENT QUANTITIES AND DIMENSIONS

DESIGN	1	2	3	4	5	6	7	8
BAR A	462A @ 6"	464A @ 6"	565A @ 6"	567A @ 6"	626A @ 6"			
BAR C	519 @ 6"	520 @ 6"	611@ 6"	707 @ 6"	708 @ 6"			
BAR E	436 @ 12"	437 @ 12"	521 @ 12"	522 @ 12"	523 @ 12"			
BAR G IN 2 SLABS	28 - 401	28 - 401	28 - 401	28 - 401	28 - 401			
BAR H IN 2 WALLS	22 - 402	22 - 402	22 - 402	22 - 402	22 - 402			
BAR J IN EXT. CORNER	0	0	3-412B @ 8½"	3-413B @ 9"	4-416B @ 10"			
T_1	12"	13"	14"	15"	16"			
T_2	13"	14"	15"	16"	17"			
T_3	12"	13"	14"	15"	16"			
X	10'-0"	10'-2"	10'-4"	10'-6"	10'-8"			
Y	10'-1"	10'-3"	10'-5"	10'-7"	10'-9"			
YD^3CLASS AA CONCRETE/FT	1.373	1.498	1.626	1.755	1.886			
LB BAR REINF STEEL/FT	151.2	153.0	234.5	260.0	316.6			
PARAPET, BARREL END, AND TOEWALL QUANTITIES - 90° SKEW - TOTAL								
YD^3CLASS AA CONCRETE	4.8	5.0	5.2	5.4	5.5			
LB BAR REINF STEEL	754	756	757	759	761			
PARAPET, BARREL END, AND TOEWALL QUANTITIES - 75° SKEW - TOTAL								
YD^3CLASS AA CONCRETE	5.0	5.2	5.4	5.6	5.8			
LB BAR REINF STEEL	910	914	918	922	926			
PARAPET, BARREL END, AND TOEWALL QUANTITIES - 60° SKEW - TOTAL								
YD^3CLASS AA CONCRETE	5.6	5.8	6.0	6.2	6.5			
LB BAR REINF STEEL	959	963	968	972	977			
PARAPET, BARREL END, AND TOEWALL QUANTITIES - 45° SKEW - TOTAL								
YD^3CLASS AA CONCRETE	6.9	7.2	7.4	7.7	8.0			
LB BAR REINF STEEL	1085	1091	1097	1103	1109			

SINGLE 8'-0" X 9'-0" BOX CULVERT

BARREL REINFORCEMENT QUANTITIES AND DIMENSIONS

DESIGN	1	2	3	4	5	6	7	8
BAR A	474A @ 6"	469A @ 6"	570A @ 6"	572A @ 6"	630A @ 6"			
BAR C	519 @ 6"	520 @ 6"	611@ 6"	707 @ 6"	708 @ 6"			
BAR E	442 @ 12"	524 @ 12"	525 @ 12"	444 @ 6"	445 @ 6"			
BAR G IN 2 SLABS	28 - 401	28 - 401	28 - 401	28 - 401	28 - 401			
BAR H IN 2 WALLS	26 - 402	26 - 402	26 - 402	26 - 402	26 - 402			
BAR J IN EXT. CORNER	0	0	3-412B @ 8½"	3-413B @ 9"	4-416B @ 10"			
T_1	12"	13"	14"	15"	16"			
T_2	13"	14"	15"	16"	17"			
T_3	12"	13"	14"	15"	16"			
X	10'-0"	10'-2"	10'-4"	10'-6"	10'-8"			
Y	11'-1"	11'-3"	11'-5"	11'-7"	11'-9"			
YD^3CLASS AA CONCRETE/FT	1.448	1.579	1.712	1.847	1.985			
LB BAR REINF STEEL/FT	168.6	170.5	247.6	279.6	340.0			
PARAPET, BARREL END, AND TOEWALL QUANTITIES - 90° SKEW - TOTAL								
YD^3CLASS AA CONCRETE	5.0	5.2	5.4	5.6	5.8			
LB BAR REINF STEEL	803	804	806	808	810			
PARAPET, BARREL END, AND TOEWALL QUANTITIES - 75° SKEW - TOTAL								
YD^3CLASS AA CONCRETE	5.2	5.4	5.6	5.8	6.0			
LB BAR REINF STEEL	960	964	968	972	976			
PARAPET, BARREL END, AND TOEWALL QUANTITIES - 60° SKEW - TOTAL								
YD^3CLASS AA CONCRETE	5.8	6.0	6.3	6.5	6.7			
LB BAR REINF STEEL	1009	1014	1018	1023	1028			
PARAPET, BARREL END, AND TOEWALL QUANTITIES - 45° SKEW - TOTAL								
YD^3CLASS AA CONCRETE	7.2	7.5	7.7	8.0	8.3			
LB BAR REINF STEEL	1137	1143	1149	1155	1161			

SINGLE 8'-0" X 10'-0" BOX CULVERT

BARREL REINFORCEMENT QUANTITIES AND DIMENSIONS

DESIGN	1	2	3	4	5	6	7	8
BAR A	476A @ 6"	704A @ 12"	575A @ 6"	634A @ 6"	636A @ 6"			
BAR C	519 @ 6"	520 @ 6"	611@ 6"	707 @ 6"	708 @ 6"			
BAR E	529 @ 12"	530 @ 12"	447 @ 6"	714 @ 12"	715 @ 12"			
BAR G IN 2 SLABS	28 - 401	28 - 401	28 - 401	28 - 401	28 - 401			
BAR H IN 2 WALLS	28 - 402	28 - 402	28 - 402	28 - 402	28 - 402			
BAR J IN EXT. CORNER	0	0	3-412B @ 8½"	3-414B @ 9"	4-416B @ 10"			
T_1	12"	13"	14"	15"	16"			
T_2	13"	14"	15"	16"	17"			
T_3	12"	13"	14"	15"	16"			
X	10'-0"	10'-2"	10'-4"	10'-6"	10'-8"			
Y	12'-1"	12'-3"	12'-5"	12'-7"	12'-9"			
YD^3CLASS AA CONCRETE/FT	1.522	1.659	1.798	1.940	2.083			
LB BAR REINF STEEL/FT	185.4	219.6	266.4	362.8	373.5			
PARAPET, BARREL END, AND TOEWALL QUANTITIES - 90° SKEW - TOTAL								
YD^3CLASS AA CONCRETE	5.1	5.4	5.6	5.8	6.0			
LB BAR REINF STEEL	827	829	830	832	834			
PARAPET, BARREL END, AND TOEWALL QUANTITIES - 75° SKEW - TOTAL								
YD^3CLASS AA CONCRETE	5.4	5.6	5.8	6.0	6.2			
LB BAR REINF STEEL	985	989	993	996	1000			
PARAPET, BARREL END, AND TOEWALL QUANTITIES - 60° SKEW - TOTAL								
YD^3CLASS AA CONCRETE	6.0	6.2	6.5	6.7	6.9			
LB BAR REINF STEEL	1034	1039	1043	1048	1052			
PARAPET, BARREL END, AND TOEWALL QUANTITIES - 45° SKEW - TOTAL								
YD^3CLASS AA CONCRETE	7.4	7.7	8.0	8.3	8.6			
LB BAR REINF STEEL	1163	1169	1175	1181	1187			

DATE | REVISION | BY

DEPARTMENT OF TRANSPORTATION
STATE OF GEORGIA

STANDARD

REINFORCED CONCRETE SINGLE BOX CULVERT 8'X7', 8'X8', 8'X9' AND 8'X10'

NO SCALE — SEPTEMBER 2017

DES. YSK
DRW. FGS
TRA. ____
CHK. JWB

(SUBMITTED) STATE DESIGN POLICY ENGINEER

(APPROVED) Margaret B Pirkle CHIEF ENGINEER

NUMBER 2401

SHEET 21 OF 31

STATE	PROJECT NUMBER	SHEET NO.	TOTAL SHEETS
GA.			

SINGLE 9'-0" X 4'-0" BOX CULVERT

BARREL REINFORCEMENT QUANTITIES AND DIMENSIONS

DESIGN	1	2	3	4	5	6	7	8
BAR A	436A @ 6"	701A @ 12"	531A @ 6"	605A @ 6"	606A @ 6"			
BAR C	443 @ 6"	526 @ 6"	614 @ 6"	711 @ 6"	712 @ 6"			
BAR E	414 @ 12"	415 @ 12"	416 @ 12"	417 @ 12"	418 @ 12"			
BAR G IN 2 SLABS	32 - 401	32 - 401	32 - 401	32 - 401	32 - 401			
BAR H IN 2 WALLS	12 - 402	12 - 402	12 - 402	12 - 402	12 - 402			
BAR J IN EXT. CORNER	0	0	3-415B @ 10 1/4"	3-418B @ 10 3/4"	3-420B @ 11 1/2"			
T_1	14"	15"	16"	17"	18"			
T_2	15"	16"	17"	18"	19"			
T_3	14"	15"	16"	17"	18"			
X	11'-4"	11'-6"	11'-8"	11'-10"	12'-0"			
Y	6'-5"	6'-7"	6'-9"	6'-11"	7'-1"			
YD³ CLASS AA CONCRETE/FT	1.369	1.480	1.593	1.707	1.824			
LB BAR REINF STEEL/FT	114.5	158.5	201.0	263.9	268.1			
PARAPET, BARREL END, AND TOEWALL QUANTITIES - 90° SKEW - TOTAL								
YD³ CLASS AA CONCRETE	4.8	4.9	5.0	5.2	5.3			
LB BAR REINF STEEL	695	696	698	699	701			
PARAPET, BARREL END, AND TOEWALL QUANTITIES - 75° SKEW - TOTAL								
YD³ CLASS AA CONCRETE	5.0	5.1	5.2	5.4	5.5			
LB BAR REINF STEEL	866	869	873	877	880			
PARAPET, BARREL END, AND TOEWALL QUANTITIES - 60° SKEW - TOTAL								
YD³ CLASS AA CONCRETE	5.5	5.7	5.9	6.0	6.2			
LB BAR REINF STEEL	918	922	927	931	935			
PARAPET, BARREL END, AND TOEWALL QUANTITIES - 45° SKEW - TOTAL								
YD³ CLASS AA CONCRETE	6.8	7.0	7.2	7.4	7.6			
LB BAR REINF STEEL	1052	1058	1064	1070	1075			

SINGLE 9'-0" X 5'-0" BOX CULVERT

BARREL REINFORCEMENT QUANTITIES AND DIMENSIONS

DESIGN	1	2	3	4	5	6	7	8
BAR A	444A @ 6"	447A @ 6"	544A @ 6"	610A @ 6"	612A @ 6"			
BAR C	709 @ 12"	526 @ 6"	614 @ 6"	711 @ 6"	712 @ 6"			
BAR E	420 @ 12"	421 @ 12"	422 @ 12"	423 @ 12"	424 @ 12"			
BAR G IN 2 SLABS	32 - 401	32 - 401	32 - 401	32 - 401	32 - 401			
BAR H IN 2 WALLS	14 - 402	14 - 402	14 - 402	14 - 402	14 - 402			
BAR J IN EXT. CORNER	0	0	3-415B @ 10 1/4"	3-418B @ 10 3/4"	3-420B @ 11 1/2"			
T_1	14"	15"	16"	17"	18"			
T_2	15"	16"	17"	18"	19"			
T_3	14"	15"	16"	17"	18"			
X	11'-4"	11'-6"	11'-8"	11'-10"	12'-0"			
Y	7'-5"	7'-7"	7'-9"	7'-11"	8'-1"			
YD³ CLASS AA CONCRETE/FT	1.456	1.573	1.691	1.812	1.935			
LB BAR REINF STEEL/FT	138.0	140.8	212.1	278.6	282.8			
PARAPET, BARREL END, AND TOEWALL QUANTITIES - 90° SKEW - TOTAL								
YD³ CLASS AA CONCRETE	4.9	5.1	5.2	5.4	5.5			
LB BAR REINF STEEL	719	720	722	723	725			
PARAPET, BARREL END, AND TOEWALL QUANTITIES - 75° SKEW - TOTAL								
YD³ CLASS AA CONCRETE	5.1	5.3	5.4	5.6	5.8			
LB BAR REINF STEEL	890	894	898	901	905			
PARAPET, BARREL END, AND TOEWALL QUANTITIES - 60° SKEW - TOTAL								
YD³ CLASS AA CONCRETE	5.7	5.9	6.1	6.3	6.4			
LB BAR REINF STEEL	943	947	951	956	960			
PARAPET, BARREL END, AND TOEWALL QUANTITIES - 45° SKEW - TOTAL								
YD³ CLASS AA CONCRETE	7.1	7.3	7.5	7.7	7.9			
LB BAR REINF STEEL	1078	1084	1089	1095	1101			

SINGLE 9'-0" X 6'-0" BOX CULVERT

BARREL REINFORCEMENT QUANTITIES AND DIMENSIONS

DESIGN	1	2	3	4	5	6	7	8
BAR A	453A @ 6"	455A @ 6"	556A @ 6"	616A @ 6"	620A @ 6"			
BAR C	709 @ 12"	526 @ 6"	614 @ 6"	711 @ 6"	712 @ 6"			
BAR E	426 @ 12"	427 @ 12"	428 @ 12"	429 @ 12"	430 @ 12"			
BAR G IN 2 SLABS	32 - 401	32 - 401	32 - 401	32 - 401	32 - 401			
BAR H IN 2 WALLS	18 - 402	18 - 402	18 - 402	18 - 402	18 - 402			
BAR J IN EXT. CORNER	0	0	3-415B @ 10 1/4"	3-418B @ 10 3/4"	4-420B @ 11 1/2"			
T_1	14"	15"	16"	17"	18"			
T_2	15"	16"	17"	18"	19"			
T_3	14"	15"	16"	17"	18"			
X	11'-4"	11'-6"	11'-8"	11'-10"	12'-0"			
Y	8'-5"	8'-7"	8'-9"	8'-11"	9'-1"			
YD³ CLASS AA CONCRETE/FT	1.542	1.665	1.790	1.917	2.046			
LB BAR REINF STEEL/FT	147.4	150.1	224.4	294.6	298.8			
PARAPET, BARREL END, AND TOEWALL QUANTITIES - 90° SKEW - TOTAL								
YD³ CLASS AA CONCRETE	5.1	5.3	5.4	5.6	5.8			
LB BAR REINF STEEL	767	768	770	771	773			
PARAPET, BARREL END, AND TOEWALL QUANTITIES - 75° SKEW - TOTAL								
YD³ CLASS AA CONCRETE	5.3	5.5	5.7	5.8	6.0			
LB BAR REINF STEEL	939	943	947	951	954			
PARAPET, BARREL END, AND TOEWALL QUANTITIES - 60° SKEW - TOTAL								
YD³ CLASS AA CONCRETE	5.9	6.1	6.3	6.5	6.7			
LB BAR REINF STEEL	993	997	1001	1006	1010			
PARAPET, BARREL END, AND TOEWALL QUANTITIES - 45° SKEW - TOTAL								
YD³ CLASS AA CONCRETE	7.3	7.6	7.8	8.0	8.3			
LB BAR REINF STEEL	1129	1135	1141	1146	1152			

DEPARTMENT OF TRANSPORTATION
STATE OF GEORGIA

STANDARD

REINFORCED CONCRETE SINGLE BOX CULVERT 9'X4', 9'X5' AND 9'X6'

NO SCALE — SEPTEMBER 2017

DATE | REVISION | BY

DES. YSK
DRW. FGS
TRA. ____
CHK. JWB

(SUBMITTED) STATE DESIGN POLICY ENGINEER

(APPROVED) Margaret B Pirkle CHIEF ENGINEER

NUMBER 2401

SHEET 2J OF 3

STATE	PROJECT NUMBER	SHEET NO.	TOTAL SHEETS
GA.			

SINGLE 9'-0" X 7'-0" BOX CULVERT

BARREL REINFORCEMENT QUANTITIES AND DIMENSIONS

DESIGN	1	2	3	4	5	6	7	8
BAR A	461A @ 6"	463A @ 6"	564A @ 6"	566A @ 6"	625A @ 6"			
BAR C	709 @ 12"	526 @ 6"	614 @ 6"	711@ 6"	803 @ 6"			
BAR E	432 @ 12"	433 @ 12"	434 @ 12"	435 @ 12"	436 @ 12"			
BAR G IN 2 SLABS	32 - 401	32 - 401	32 - 401	32 - 401	32 - 401			
BAR H IN 2 WALLS	20 - 402	20 - 402	20 - 402	20 - 402	20 - 402			
BAR J IN EXT. CORNER	0	0	3-415B @ 10 1/4"	3-417B @ 10 3/4"	3-420B @ 11 1/4"			
T_1	14"	15"	16"	17"	18"			
T_2	15"	16"	17"	18"	19"			
T_3	14"	15"	16"	17"	18"			
X	11'-4"	11'-6"	11'-8"	11'-10"	12'-0"			
Y	9'-5"	9'-7"	9'-9"	9'-11"	10'-1"			
YD^3 CLASS AA CONCRETE/FT	1.629	1.758	1.889	2.022	2.157			
LB BAR REINF STEEL/FT	155.4	158.1	235.4	263.6	342.7			
PARAPET, BARREL END, AND TOEWALL QUANTITIES - 90° SKEW - TOTAL								
YD^3 CLASS AA CONCRETE	5.3	5.5	5.7	5.8	6.0			
LB BAR REINF STEEL	792	793	795	796	798			
PARAPET, BARREL END, AND TOEWALL QUANTITIES - 75° SKEW - TOTAL								
YD^3 CLASS AA CONCRETE	5.5	5.7	5.9	6.1	6.3			
LB BAR REINF STEEL	965	969	972	976	980			
PARAPET, BARREL END, AND TOEWALL QUANTITIES - 60° SKEW - TOTAL								
YD^3 CLASS AA CONCRETE	6.2	6.4	6.6	6.8	7.0			
LB BAR REINF STEEL	1018	1023	1027	1031	1036			
PARAPET, BARREL END, AND TOEWALL QUANTITIES - 45° SKEW - TOTAL								
YD^3 CLASS AA CONCRETE	7.6	7.9	8.1	8.4	8.6			
LB BAR REINF STEEL	1156	1161	1167	1173	1179			

SINGLE 9'-0" X 8'-0" BOX CULVERT

BARREL REINFORCEMENT QUANTITIES AND DIMENSIONS

DESIGN	1	2	3	4	5	6	7	8
BAR A	467A @ 6"	468A @ 6"	569A @ 6"	571A @ 6"	629A @ 6"			
BAR C	709 @ 12"	613 @ 6"	614 @ 6"	711@ 6"	803 @ 6"			
BAR E	438 @ 12"	439 @ 12"	440 @ 12"	441 @ 12"	442 @ 12"			
BAR G IN 2 SLABS	32 - 401	32 - 401	32 - 401	32 - 401	32 - 401			
BAR H IN 2 WALLS	22 - 402	22 - 402	22 - 402	22 - 402	22 - 402			
BAR J IN EXT. CORNER	0	0	3-415B @ 10 1/4"	3-417B @ 10 3/4"	4-420B @ 11 1/4"			
T_1	14"	15"	16"	17"	18"			
T_2	15"	16"	17"	18"	19"			
T_3	14"	15"	16"	17"	18"			
X	11'-4"	11'-6"	11'-8"	11'-10"	12'-0"			
Y	10'-5"	10'-7"	10'-9"	10'-11"	11'-1"			
YD^3 CLASS AA CONCRETE/FT	1.715	1.850	1.988	2.127	2.269			
LB BAR REINF STEEL/FT	163.4	186.7	246.4	274.7	363.9			
PARAPET, BARREL END, AND TOEWALL QUANTITIES - 90° SKEW - TOTAL								
YD^3 CLASS AA CONCRETE	5.6	5.7	5.9	6.1	6.3			
LB BAR REINF STEEL	817	819	820	822	823			
PARAPET, BARREL END, AND TOEWALL QUANTITIES - 75° SKEW - TOTAL								
YD^3 CLASS AA CONCRETE	5.8	6.0	6.2	6.4	6.6			
LB BAR REINF STEEL	991	995	999	1002	1006			
PARAPET, BARREL END, AND TOEWALL QUANTITIES - 60° SKEW - TOTAL								
YD^3 CLASS AA CONCRETE	6.5	6.7	6.9	7.1	7.3			
LB BAR REINF STEEL	1045	1049	1054	1058	1062			
PARAPET, BARREL END, AND TOEWALL QUANTITIES - 45° SKEW - TOTAL								
YD^3 CLASS AA CONCRETE	8.0	8.2	8.5	8.8	9.0			
LB BAR REINF STEEL	1183	1189	1194	1200	1206			

SINGLE 9'-0" X 9'-0" BOX CULVERT

BARREL REINFORCEMENT QUANTITIES AND DIMENSIONS

DESIGN	1	2	3	4	5	6	7	8
BAR A	471A @ 6"	472A @ 6"	574A @ 6"	632A @ 6"	635A @ 6"			
BAR C	709 @ 12"	613 @ 6"	614 @ 6"	711 @ 6"	803 @ 6"			
BAR E	443 @ 12"	444 @ 12"	527 @ 12"	528 @ 12"	529 @ 12"			
BAR G IN 2 SLABS	32 - 401	32 - 401	32 - 401	32 - 401	32 - 401			
BAR H IN 2 WALLS	26 - 402	26 - 402	26 - 402	26 - 402	26 - 402			
BAR J IN EXT. CORNER	0	0	3-415B @ 10 1/4"	3-418B @ 10 3/4"	4-420B @ 11 1/4"			
T_1	14"	15"	16"	17"	18"			
T_2	15"	16"	17"	18"	19"			
T_3	14"	15"	16"	17"	18"			
X	11'-4"	11'-6"	11'-8"	11'-10"	12'-0"			
Y	11'-5"	11'-7"	11'-9"	11'-11"	12'-1"			
YD^3 CLASS AA CONCRETE/FT	1.801	1.943	2.086	2.232	2.380			
LB BAR REINF STEEL/FT	172.8	196.0	267.3	348.6	388.6			
PARAPET, BARREL END, AND TOEWALL QUANTITIES - 90° SKEW - TOTAL								
YD^3 CLASS AA CONCRETE	5.8	6.0	6.2	6.4	6.6			
LB BAR REINF STEEL	866	868	869	871	872			
PARAPET, BARREL END, AND TOEWALL QUANTITIES - 75° SKEW - TOTAL								
YD^3 CLASS AA CONCRETE	6.0	6.2	6.4	6.6	6.8			
LB BAR REINF STEEL	1041	1045	1049	1052	1056			
PARAPET, BARREL END, AND TOEWALL QUANTITIES - 60° SKEW - TOTAL								
YD^3 CLASS AA CONCRETE	6.7	6.9	7.2	7.4	7.6			
LB BAR REINF STEEL	1096	1100	1104	1109	1113			
PARAPET, BARREL END, AND TOEWALL QUANTITIES - 45° SKEW - TOTAL								
YD^3 CLASS AA CONCRETE	8.3	8.5	8.8	9.1	9.4			
LB BAR REINF STEEL	1235	1241	1247	1252	1258			

SINGLE 9'-0" X 10'-0" BOX CULVERT

BARREL REINFORCEMENT QUANTITIES AND DIMENSIONS

DESIGN	1	2	3	4	5	6	7	8
BAR A	478A @ 6"	706A @ 12"	577A @ 6"	638A @ 6"	640A @ 6"			
BAR C	525 @ 6"	613 @ 6"	710 @ 6"	711 @ 6"	803 @ 6"			
BAR E	531 @ 12"	532 @ 12"	448 @ 6"	449 @ 6"	450 @ 6"			
BAR G IN 2 SLABS	32 - 401	32 - 401	32 - 401	32 - 401	32 - 401			
BAR H IN 2 WALLS	28 - 402	28 - 402	28 - 402	28 - 402	28 - 402			
BAR J IN EXT. CORNER	0	0	3-415B @ 10"	3-418B @ 10 3/4"	4-420B @ 11 1/4"			
T_1	14"	15"	16"	17"	18"			
T_2	15"	16"	17"	18"	19"			
T_3	14"	15"	16"	17"	18"			
X	11'-4"	11'-6"	11'-8"	11'-10"	12'-0"			
Y	12'-5"	12'-7"	12'-9"	12'-11"	13'-1"			
YD^3 CLASS AA CONCRETE/FT	1.888	2.035	2.185	2.337	2.491			
LB BAR REINF STEEL/FT	199.2	255.9	310.9	371.4	411.5			
PARAPET, BARREL END, AND TOEWALL QUANTITIES - 90° SKEW - TOTAL								
YD^3 CLASS AA CONCRETE	5.9	6.1	6.4	6.6	6.8			
LB BAR REINF STEEL	891	892	894	895	897			
PARAPET, BARREL END, AND TOEWALL QUANTITIES - 75° SKEW - TOTAL								
YD^3 CLASS AA CONCRETE	6.2	6.4	6.6	6.8	7.1			
LB BAR REINF STEEL	1066	1070	1073	1077	1081			
PARAPET, BARREL END, AND TOEWALL QUANTITIES - 60° SKEW - TOTAL								
YD^3 CLASS AA CONCRETE	6.9	7.1	7.4	7.6	7.9			
LB BAR REINF STEEL	1121	1125	1129	1134	1138			
PARAPET, BARREL END, AND TOEWALL QUANTITIES - 45° SKEW - TOTAL								
YD^3 CLASS AA CONCRETE	8.5	8.8	9.1	9.4	9.7			
LB BAR REINF STEEL	1261	1266	1272	1278	1284			

DEPARTMENT OF TRANSPORTATION
STATE OF GEORGIA

STANDARD

REINFORCED CONCRETE SINGLE BOX CULVERT 9'X7', 9'X8', 9'X9' AND 9'X10'

NO SCALE — SEPTEMBER 2017

DATE | REVISION | BY

DES. YSK
DRW. EGS
TRA. ____
CHK. JWB

(SUBMITTED) STATE DESIGN POLICY ENGINEER

(APPROVED) Margaret B Pirkle CHIEF ENGINEER

NUMBER 2401

SHEET 2K OF 3

STATE	PROJECT NUMBER	SHEET NO.	TOTAL SHEETS
GA.			

SINGLE 10'-0" X 4'-0" BOX CULVERT

BARREL REINFORCEMENT QUANTITIES AND DIMENSIONS

DESIGN	1	2	3	4	5	6	7	8
BAR A	442A @ 6"	541A @ 6"	609A @ 6"	611A @ 6"	615A @ 6"			
BAR C	713 @ 12"	533 @ 6"	616 @ 6"	717 @ 6"	718 @ 6"			
BAR E	414 @ 12"	416 @ 12"	418 @ 12"	420 @ 12"	422 @ 12"			
BAR G IN 2 SLABS	32 - 401	34 - 401	34 - 401	40 - 401	40 - 401			
BAR H IN 2 WALLS	12 - 402	12 - 402	12 - 402	12 - 402	12 - 402			
BAR J IN EXT. CORNER	0	0	0	3-421B @ 13"	3-422B @ 14¾"			
T_1	14"	16"	18"	20"	22"			
T_2	15"	17"	19"	21"	23"			
T_3	14"	16"	18"	20"	22"			
X	12'-4"	12'-8"	13'-0"	13'-4"	13'-8"			
Y	6'-5"	6'-9"	7'-1"	7'-5"	7'-9"			
YD^3 CLASS AA CONCRETE/FT	1.459	1.694	1.938	2.190	2.451			
LB BAR REINF STEEL/FT	136.8	172.0	236.9	296.2	304.7			
PARAPET, BARREL END, AND TOEWALL QUANTITIES - 90° SKEW - TOTAL								
YD^3 CLASS AA CONCRETE	5.1	5.4	5.7	6.0	6.3			
LB BAR REINF STEEL	716	737	739	803	805			
PARAPET, BARREL END, AND TOEWALL QUANTITIES - 75° SKEW - TOTAL								
YD^3 CLASS AA CONCRETE	5.3	5.6	5.9	6.2	6.5			
LB BAR REINF STEEL	900	925	932	1000	1007			
PARAPET, BARREL END, AND TOEWALL QUANTITIES - 60° SKEW - TOTAL								
YD^3 CLASS AA CONCRETE	6.0	6.3	6.6	6.9	7.3			
LB BAR REINF STEEL	956	983	991	1060	1069			
PARAPET, BARREL END, AND TOEWALL QUANTITIES - 45° SKEW - TOTAL								
YD^3 CLASS AA CONCRETE	7.4	7.8	8.2	8.6	9.0			
LB BAR REINF STEEL	1099	1129	1140	1212	1223			

BY	DATE	REVISION

DEPARTMENT OF TRANSPORTATION
STATE OF GEORGIA

STANDARD

REINFORCED CONCRETE
SINGLE BOX CULVERT
10'X4'

NO SCALE — SEPTEMBER 2017

DES. YSK
DRW. FGS
TRA. ____
CHK. JWB

(SUBMITTED) STATE DESIGN POLICY ENGINEER

(APPROVED) Margaret B Pirkle
CHIEF ENGINEER

NUMBER
2401

SHEET 2L OF 3

STATE	PROJECT NUMBER	SHEET NO.	TOTAL SHEETS
GA.			

SINGLE 10'-0" X 5'-0" BOX CULVERT

BARREL REINFORCEMENT QUANTITIES AND DIMENSIONS

DESIGN	1	2	3	4	5	6	7	8
BAR A	450A @ 6"	551A @ 6"	554A @ 6"	617A @ 6"	623A @ 6"			
BAR C	713 @ 12"	615 @ 6"	616 @ 6"	717 @ 6"	718 @ 6"			
BAR E	420 @ 12"	422 @ 12"	424 @ 12"	426 @ 12"	428 @ 12"			
BAR G IN 2 SLABS	32 - 401	34 - 401	34 - 401	40 - 401	40 - 401			
BAR H IN 2 WALLS	14 - 402	14 - 402	14 - 402	16 - 402	16 - 402			
BAR J IN EXT. CORNER	0	0	0	3-421B @ 13"	3-422B @ 14¾"			
T_1	14"	16"	18"	20"	22"			
T_2	15"	17"	19"	21"	23"			
T_3	14"	16"	18"	20"	22"			
X	12'-4"	12'-8"	13'-0"	13'-4"	13'-8"			
Y	7'-5"	7'-9"	8'-1"	8'-5"	8'-9"			
YD³ CLASS AA CONCRETE/FT	1.545	1.793	2.049	2.314	2.586			
LB BAR REINF STEEL/FT	144.8	205.7	210.9	312.2	320.7			
PARAPET, BARREL END, AND TOEWALL QUANTITIES - 90° SKEW - TOTAL								
YD³ CLASS AA CONCRETE	5.3	5.6	5.9	6.2	6.5			
LB BAR REINF STEEL	740	761	763	851	853			
PARAPET, BARREL END, AND TOEWALL QUANTITIES - 75° SKEW - TOTAL								
YD³ CLASS AA CONCRETE	5.5	5.8	6.2	6.5	6.8			
LB BAR REINF STEEL	925	950	957	1049	1056			
PARAPET, BARREL END, AND TOEWALL QUANTITIES - 60° SKEW - TOTAL								
YD³ CLASS AA CONCRETE	6.2	6.5	6.9	7.2	7.6			
LB BAR REINF STEEL	981	1008	1016	1110	1118			
PARAPET, BARREL END, AND TOEWALL QUANTITIES - 45° SKEW - TOTAL								
YD³ CLASS AA CONCRETE	7.6	8.0	8.5	8.9	9.4			
LB BAR REINF STEEL	1125	1154	1165	1263	1274			

SINGLE 10'-0" X 6'-0" BOX CULVERT

BARREL REINFORCEMENT QUANTITIES AND DIMENSIONS

DESIGN	1	2	3	4	5	6	7	8
BAR A	459A @ 6"	562A @ 6"	563A @ 6"	624A @ 6"	627A @ 6"			
BAR C	713 @ 12"	615 @ 6"	616 @ 6"	717 @ 6"	718 @ 6"			
BAR E	426 @ 12"	428 @ 12"	430 @ 12"	432 @ 12"	434 @ 12"			
BAR G IN 2 SLABS	32 - 401	34 - 401	34 - 401	40 - 401	40 - 401			
BAR H IN 2 WALLS	18 - 402	18 - 402	18 - 402	22 - 402	22 - 402			
BAR J IN EXT. CORNER	0	0	3-419B @ 11¾"	3-421B @ 13"	3-422B @ 14¾"			
T_1	14"	16"	18"	20"	22"			
T_2	15"	17"	19"	21"	23"			
T_3	14"	16"	18"	20"	22"			
X	12'-4"	12'-8"	13'-0"	13'-4"	13'-8"			
Y	8'-5"	8'-9"	9'-1"	9'-5"	9'-9"			
YD³ CLASS AA CONCRETE/FT	1.632	1.892	2.160	2.437	2.722			
LB BAR REINF STEEL/FT	154.2	218.0	242.5	329.6	338.1			
PARAPET, BARREL END, AND TOEWALL QUANTITIES - 90° SKEW - TOTAL								
YD³ CLASS AA CONCRETE	5.5	5.8	6.1	6.5	6.8			
LB BAR REINF STEEL	788	809	811	923	926			
PARAPET, BARREL END, AND TOEWALL QUANTITIES - 75° SKEW - TOTAL								
YD³ CLASS AA CONCRETE	5.7	6.0	6.4	6.7	7.1			
LB BAR REINF STEEL	974	999	1006	1123	1130			
PARAPET, BARREL END, AND TOEWALL QUANTITIES - 60° SKEW - TOTAL								
YD³ CLASS AA CONCRETE	6.4	6.7	7.1	7.5	7.9			
LB BAR REINF STEEL	1031	1057	1066	1185	1193			
PARAPET, BARREL END, AND TOEWALL QUANTITIES - 45° SKEW - TOTAL								
YD³ CLASS AA CONCRETE	7.9	8.3	8.8	9.3	9.8			
LB BAR REINF STEEL	1176	1205	1216	1340	1351			

SINGLE 10'-0" X 7'-0" BOX CULVERT

BARREL REINFORCEMENT QUANTITIES AND DIMENSIONS

DESIGN	1	2	3	4	5	6	7	8
BAR A	465A @ 6"	702A @ 12"	568A @ 6"	628A @ 6"	631A @ 6"			
BAR C	713 @ 12"	615 @ 6"	716 @ 6"	717 @ 6"	805 @ 6"			
BAR E	432 @ 12"	434 @ 12"	436 @ 12"	438 @ 12"	440 @ 12"			
BAR G IN 2 SLABS	32 - 401	34 - 401	34 - 401	40 - 401	40 - 401			
BAR H IN 2 WALLS	20 - 402	20 - 402	20 - 402	22 - 402	22 - 402			
BAR J IN EXT. CORNER	0	0	3-419B @ 11½"	3-421B @ 13"	3-422B @ 14½"			
T_1	14"	16"	18"	20"	22"			
T_2	15"	17"	19"	21"	23"			
T_3	14"	16"	18"	20"	22"			
X	12'-4"	12'-8"	13'-0"	13'-4"	13'-8"			
Y	9'-5"	9'-9"	10'-1"	10'-5"	10'-9"			
YD³ CLASS AA CONCRETE/FT	1.718	1.991	2.272	2.561	2.858			
LB BAR REINF STEEL/FT	162.2	226.9	281.0	342.9	384.8			
PARAPET, BARREL END, AND TOEWALL QUANTITIES - 90° SKEW - TOTAL								
YD³ CLASS AA CONCRETE	5.7	6.0	6.4	6.8	7.1			
LB BAR REINF STEEL	813	834	836	924	927			
PARAPET, BARREL END, AND TOEWALL QUANTITIES - 75° SKEW - TOTAL								
YD³ CLASS AA CONCRETE	5.9	6.3	6.7	7.0	7.4			
LB BAR REINF STEEL	999	1025	1032	1124	1131			
PARAPET, BARREL END, AND TOEWALL QUANTITIES - 60° SKEW - TOTAL								
YD³ CLASS AA CONCRETE	6.6	7.0	7.4	7.8	8.3			
LB BAR REINF STEEL	1057	1083	1092	1186	1194			
PARAPET, BARREL END, AND TOEWALL QUANTITIES - 45° SKEW - TOTAL								
YD³ CLASS AA CONCRETE	8.2	8.6	9.2	9.7	10.2			
LB BAR REINF STEEL	1202	1232	1243	1341	1352			

SINGLE 10'-0" X 8'-0" BOX CULVERT

BARREL REINFORCEMENT QUANTITIES AND DIMENSIONS

DESIGN	1	2	3	4	5	6	7	8
BAR A	470A @ 6"	703A @ 12"	573A @ 6"	633A @ 6"	637A @ 6"			
BAR C	531@ 6"	615 @ 6"	716 @ 6"	717 @ 6"	805 @ 6"			
BAR E	438 @ 12"	440 @ 12"	442 @ 12"	443 @ 12"	445 @ 12"			
BAR G IN 2 SLABS	32 - 401	34 - 401	34 - 401	40 - 401	40 - 401			
BAR H IN 2 WALLS	22 - 402	22 - 402	22 - 402	28 - 402	28 - 402			
BAR J IN EXT. CORNER	0	0	3-419B @ 11½"	3-421B @ 13"	3-422B @ 14½"			
T_1	14"	16"	18"	20"	22"			
T_2	15"	17"	19"	21"	23"			
T_3	14"	16"	18"	20"	22"			
X	12'-4"	12'-8"	13'-0"	13'-4"	13'-8"			
Y	10'-5"	10'-9"	11'-1"	11'-5"	11'-9"			
YD³ CLASS AA CONCRETE/FT	1.805	2.090	2.383	2.684	2.994			
LB BAR REINF STEEL/FT	171.2	237.7	292.0	360.3	402.2			
PARAPET, BARREL END, AND TOEWALL QUANTITIES - 90° SKEW - TOTAL								
YD³ CLASS AA CONCRETE	5.9	6.3	6.7	7.1	7.5			
LB BAR REINF STEEL	838	860	862	999	1001			
PARAPET, BARREL END, AND TOEWALL QUANTITIES - 75° SKEW - TOTAL								
YD³ CLASS AA CONCRETE	6.2	6.6	7.0	7.4	7.8			
LB BAR REINF STEEL	1026	1051	1058	1200	1207			
PARAPET, BARREL END, AND TOEWALL QUANTITIES - 60° SKEW - TOTAL								
YD³ CLASS AA CONCRETE	6.9	7.3	7.8	8.2	8.7			
LB BAR REINF STEEL	1083	1110	1118	1263	1271			
PARAPET, BARREL END, AND TOEWALL QUANTITIES - 45° SKEW - TOTAL								
YD³ CLASS AA CONCRETE	8.5	9.0	9.6	10.1	10.7			
LB BAR REINF STEEL	1230	1259	1270	1420	1431			

DEPARTMENT OF TRANSPORTATION
STATE OF GEORGIA

STANDARD

REINFORCED CONCRETE SINGLE BOX CULVERT 10'X5', 10'X6', 10'X7' AND 10'X8'

NO SCALE — SEPTEMBER 2017

DATE | REVISION | BY

DES. YSK
DRW. FGS
TRA. ___
CHK. JWB

(SUBMITTED) STATE DESIGN POLICY ENGINEER

(APPROVED) Margaret B Pirkle CHIEF ENGINEER

NUMBER 2401

SHEET 2M OF 3

STATE	PROJECT NUMBER	SHEET NO.	TOTAL SHEETS
GA.			

SINGLE 10'-0" X 9'-0" BOX CULVERT

BARREL REINFORCEMENT QUANTITIES AND DIMENSIONS

DESIGN	1	2	3	4	5	6	7	8
BAR A	473A @ 6"	705A @ 12"	576A @ 6"	639A @ 6"	641A @ 6"			
BAR C	531 @ 6"	615 @ 6"	716 @ 6"	717 @ 6"	805 @ 6"			
BAR E	443 @ 12"	445 @ 12"	446 @ 12"	447 @ 12"	448 @ 12"			
BAR G IN 2 SLABS	32 - 401	34 - 401	34 - 401	40 - 401	40 - 401			
BAR H IN 2 WALLS	26 - 402	26 - 402	26 - 402	32 - 402	32 - 402			
BAR J IN EXT. CORNER	0	0	3-419B @ 11½"	3-421B @ 13"	3-422B @ 14½"			
T_1	14"	16"	18"	20"	22"			
T_2	15"	17"	19"	21"	23"			
T_3	14"	16"	18"	20"	22"			
X	12'-4"	12'-8"	13'-0"	13'-4"	13'-8"			
Y	11'-5"	11'-9"	12'-1"	12'-5"	12'-9"			
YD^3 CLASS AA CONCRETE/FT	1.891	2.188	2.494	2.808	3.130			
LB BAR REINF STEEL/FT	180.5	249.9	304.3	376.3	418.2			
PARAPET, BARREL END, AND TOEWALL QUANTITIES - 90° SKEW - TOTAL								
YD^3 CLASS AA CONCRETE	6.1	6.5	7.0	7.4	7.8			
LB BAR REINF STEEL	887	909	911	1048	1050			
PARAPET, BARREL END, AND TOEWALL QUANTITIES - 75° SKEW - TOTAL								
YD^3 CLASS AA CONCRETE	6.4	6.8	7.2	7.7	8.1			
LB BAR REINF STEEL	1076	1101	1108	1251	1258			
PARAPET, BARREL END, AND TOEWALL QUANTITIES - 60° SKEW - TOTAL								
YD^3 CLASS AA CONCRETE	7.1	7.6	8.1	8.6	9.1			
LB BAR REINF STEEL	1134	1161	1169	1314	1322			
PARAPET, BARREL END, AND TOEWALL QUANTITIES - 45° SKEW - TOTAL								
YD^3 CLASS AA CONCRETE	8.8	9.4	10.0	10.5	11.1			
LB BAR REINF STEEL	1282	1312	1323	1472	1483			

SINGLE 10'-0" X 10'-0" BOX CULVERT

BARREL REINFORCEMENT QUANTITIES AND DIMENSIONS

DESIGN	1	2	3	4	5	6	7	8
BAR A	475A @ 6"	578A @ 6"	579A @ 6"	642A @ 6"	643A @ 6"			
BAR C	531 @ 6"	615 @ 6"	716 @ 6"	717 @ 6"	805 @ 6"			
BAR E	447 @ 12"	533 @ 12"	534 @ 12"	535 @ 12"	451 @ 6"			
BAR G IN 2 SLABS	32 - 401	34 - 401	34 - 401	40 - 401	40 - 401			
BAR H IN 2 WALLS	28 - 402	28 - 402	28 - 402	32 - 402	32 - 402			
BAR J IN EXT. CORNER	0	0	3-419B @ 11½"	3-421B @ 13"	3-422B @ 14½"			
T_1	14"	16"	18"	20"	22"			
T_2	15"	17"	19"	21"	23"			
T_3	14"	16"	18"	20"	22"			
X	12'-4"	12'-8"	13'-0"	13'-4"	13'-8"			
Y	12'-5"	12'-9"	13'-1"	13'-5"	13'-9"			
YD^3 CLASS AA CONCRETE/FT	1.977	2.287	2.605	2.931	3.265			
LB BAR REINF STEEL/FT	188.6	272.7	324.8	399.4	449.4			
PARAPET, BARREL END, AND TOEWALL QUANTITIES - 90° SKEW - TOTAL								
YD^3 CLASS AA CONCRETE	6.3	6.7	7.2	7.6	8.1			
LB BAR REINF STEEL	912	933	935	1048	1050			
PARAPET, BARREL END, AND TOEWALL QUANTITIES - 75° SKEW - TOTAL								
YD^3 CLASS AA CONCRETE	6.6	7.0	7.5	7.9	8.4			
LB BAR REINF STEEL	1100	1126	1133	1251	1258			
PARAPET, BARREL END, AND TOEWALL QUANTITIES - 60° SKEW - TOTAL								
YD^3 CLASS AA CONCRETE	7.3	7.8	8.3	8.8	9.4			
LB BAR REINF STEEL	1159	1186	1194	1314	1322			
PARAPET, BARREL END, AND TOEWALL QUANTITIES - 45° SKEW - TOTAL								
YD^3 CLASS AA CONCRETE	9.0	9.7	10.3	10.9	11.5			
LB BAR REINF STEEL	1307	1337	1348	1472	1483			

SINGLE 10'-0" X 11'-0" BOX CULVERT

BARREL REINFORCEMENT QUANTITIES AND DIMENSIONS

DESIGN	1	2	3	4	5	6	7	8
BAR A	477A @ 6"	580A @ 6"	581A @ 6"	644A @ 6"	645A @ 6"			
BAR C	531 @ 6"	615 @ 6"	716 @ 6"	717 @ 6"	805 @ 6"			
BAR E	535 @ 12"	451 @ 6"	452 @ 6"	617 @ 12"	719 @ 12"			
BAR G IN 2 SLABS	32 - 401	34 - 401	34 - 401	40 - 401	40 - 401			
BAR H IN 2 WALLS	30 - 402	30 - 402	30 - 402	36 - 402	36 - 402			
BAR J IN EXT. CORNER	0	0	3-419B @ 11½"	3-421B @ 13"	3-422B @ 14½"			
T_1	14"	16"	18"	20"	22"			
T_2	15"	17"	19"	21"	23"			
T_3	14"	16"	18"	20"	22"			
X	12'-4"	12'-8"	13'-0"	13'-4"	13'-8"			
Y	13'-5"	13'-9"	14'-1"	14'-5"	14'-9"			
YD^3 CLASS AA CONCRETE/FT	2.064	2.386	2.716	3.055	3.401			
LB BAR REINF STEEL/FT	206.3	292.2	344.6	429.0	487.0			
PARAPET, BARREL END, AND TOEWALL QUANTITIES - 90° SKEW - TOTAL								
YD^3 CLASS AA CONCRETE	6.5	6.9	7.4	7.9	8.3			
LB BAR REINF STEEL	936	957	959	1096	1098			
PARAPET, BARREL END, AND TOEWALL QUANTITIES - 75° SKEW - TOTAL								
YD^3 CLASS AA CONCRETE	6.8	7.2	7.7	8.2	8.7			
LB BAR REINF STEEL	1125	1150	1157	1300	1307			
PARAPET, BARREL END, AND TOEWALL QUANTITIES - 60° SKEW - TOTAL								
YD^3 CLASS AA CONCRETE	7.5	8.1	8.6	9.1	9.7			
LB BAR REINF STEEL	1184	1211	1219	1364	1372			
PARAPET, BARREL END, AND TOEWALL QUANTITIES - 45° SKEW - TOTAL								
YD^3 CLASS AA CONCRETE	9.3	9.9	10.6	11.2	11.9			
LB BAR REINF STEEL	1333	1363	1374	1524	1535			

SINGLE 10'-0" X 12'-0" BOX CULVERT

BARREL REINFORCEMENT QUANTITIES AND DIMENSIONS

DESIGN	1	2	3	4	5	6	7	8
BAR A	479A @ 6"	582A @ 6"	646A @ 6"	647A @ 6"	648A @ 6"			
BAR C	804 @ 12"	615 @ 6"	716 @ 6"	717 @ 6"	805 @ 6"			
BAR E	536 @ 12"	453 @ 6"	618 @ 12"	720 @ 12"	721 @ 12"			
BAR G IN 2 SLABS	32 - 401	34 - 401	34 - 401	40 - 401	40 - 401			
BAR H IN 2 WALLS	34 - 402	34 - 402	34 - 402	42 - 402	42 - 402			
BAR J IN EXT. CORNER	0	0	3-420B @ 11½"	3-421B @ 13"	3-422B @ 14½"			
T_1	14"	16"	18"	20"	22"			
T_2	15"	17"	19"	21"	23"			
T_3	14"	16"	18"	20"	22"			
X	12'-4"	12'-8"	13'-0"	13'-4"	13'-8"			
Y	14'-5"	14'-9"	15'-1"	15'-5"	15'-9"			
YD^3 CLASS AA CONCRETE/FT	2.150	2.485	2.827	3.178	3.537			
LB BAR REINF STEEL/FT	230.4	305.9	429.6	464.3	507.1			
PARAPET, BARREL END, AND TOEWALL QUANTITIES - 90° SKEW - TOTAL								
YD^3 CLASS AA CONCRETE	6.7	7.2	7.7	8.2	8.7			
LB BAR REINF STEEL	985	1006	1008	1169	1172			
PARAPET, BARREL END, AND TOEWALL QUANTITIES - 75° SKEW - TOTAL								
YD^3 CLASS AA CONCRETE	7.0	7.5	8.0	8.5	9.0			
LB BAR REINF STEEL	1175	1200	1207	1375	1382			
PARAPET, BARREL END, AND TOEWALL QUANTITIES - 60° SKEW - TOTAL								
YD^3 CLASS AA CONCRETE	7.8	8.3	8.9	9.5	10.0			
LB BAR REINF STEEL	1234	1261	1270	1440	1448			
PARAPET, BARREL END, AND TOEWALL QUANTITIES - 45° SKEW - TOTAL								
YD^3 CLASS AA CONCRETE	9.6	10.3	11.0	11.7	12.4			
LB BAR REINF STEEL	1385	1415	1426	1601	1613			

DEPARTMENT OF TRANSPORTATION
STATE OF GEORGIA

STANDARD

REINFORCED CONCRETE
SINGLE BOX CULVERT
10'X9', 10'X10', 10'X11' AND 10'X12'

NO SCALE — SEPTEMBER 2017

DATE | REVISION | BY

DES. YSK
DRW. FGS
TRA. ___
CHK. JWB

(SUBMITTED) STATE DESIGN POLICY ENGINEER
(APPROVED) Margaret B Pirkle CHIEF ENGINEER

NUMBER 2401
SHEET 2N OF 3

STATE	PROJECT NUMBER	SHEET NO.	TOTAL SHEETS
GA.			

MARK	LENGTH	TYPE
401	L* - 4"	1
402	L* + 20"	1
403	4'-0"	1
404	4'-2"	1
405	4'-4"	1
406	4'-6"	1
407	4'-8"	1
408	5'-0"	1
409	5'-2"	1
410	5'-4"	1
411	5'-6"	1
412	5'-8"	1
413	5'-10"	1
414	6'-0"	1
415	6'-2"	1
416	6'-4"	1
417	6'-6"	1
418	6'-8"	1
419	6'-10"	1
420	7'-0"	1
421	7'-2"	1
422	7'-4"	1
423	7'-6"	1
424	7'-8"	1
425	7'-10"	1
426	8'-0"	1
427	8'-2"	1
428	8'-4"	1
429	8'-6"	1
430	8'-8"	1
431	8'-10"	1
432	9'-0"	1
433	9'-2"	1
434	9'-4"	1
435	9'-6"	1
436	9'-8"	1
437	9'-10"	1
438	10'-0"	1
439	10'-2"	1
440	10'-4"	1
441	10'-6"	1
442	10'-8"	1
443	11'-0"	1
444	11'-2"	1
445	11'-4"	1
446	11'-8"	1
447	12'-0"	1
448	12'-4"	1
449	12'-6"	1
450	12'-8"	1
451	13'-4"	1
452	13'-8"	1
453	14'-4"	1

MARK	LENGTH	TYPE
501	5'-0"	1
502	5'-2"	1
503	6'-0"	1
504	6'-2"	1
505	7'-0"	1
506	7'-2"	1
507	7'-4"	1
508	7'-8"	1
509	8'-0"	1
510	8'-2"	1
511	8'-4"	1
512	8'-6"	1
513	8'-8"	1
514	8'-10"	1
515	9'-0"	1
516	9'-2"	1
517	9'-4"	1
518	9'-6"	1
519	9'-8"	1
520	9'-10"	1
521	10'-0"	1
522	10'-2"	1
523	10'-4"	1
524	10'-10"	1
525	11'-0"	1
526	11'-2"	1
527	11'-4"	1
528	11'-6"	1
529	11'-8"	1
530	11'-10"	1
531	12'-0"	1
532	12'-2"	1
533	12'-4"	1
534	12'-8"	1
535	13'-0"	1
536	14'-0"	1

MARK	LENGTH	TYPE
601	6'-2"	1
602	6'-4"	1
603	7'-2"	1
604	7'-4"	1
605	7'-6"	1
606	7'-8"	1
607	8'-2"	1
608	8'-6"	1
609	8'-8"	1
610	9'-6"	1
611	10'-0"	1
612	10'-2"	1
613	11'-2"	1
614	11'-4"	1
615	12'-4"	1
616	12'-8"	1
617	14'-0"	1
618	14'-8"	1
701	7'-8"	1
702	8'-4"	1
703	8'-8"	1
704	8'-10"	1
705	9'-2"	1
706	9'-8"	1
707	10'-2"	1
708	10'-4"	1
709	11'-0"	1
710	11'-4"	1
711	11'-6"	1
712	11'-8"	1
713	12'-0"	1
714	12'-2"	1
715	12'-4"	1
716	12'-8"	1
717	13'-0"	1
718	13'-4"	1
719	14'-4"	1
720	15'-0"	1
721	15'-4"	1
801	9'-2"	1
802	9'-4"	1
803	11'-8"	1
804	12'-0"	1
805	13'-4"	1

MARK	LENGTH	TYPE	A	B
401A	4'-5"	3	1'-10"	2'-7"
402A	4'-7"	3	1'-11"	2'-8"
403A	4'-11"	3	2'-4"	2'-7"
404A	5'-1"	3	2'-5"	2'-8"
405A	5'-5"	3	1'-10"	3'-7"
406A	5'-5"	3	2'-10"	2'-7"
407A	5'-7"	3	1'-11"	3'-8"
408A	5'-7"	3	2'-0"	3'-7"
409A	5'-7"	3	2'-11"	2'-8"
410A	5'-11"	3	2'-4"	3'-7"
411A	6'-1"	3	2'-5"	3'-8"
412A	6'-5"	3	2'-10"	3'-7"
413A	6'-7"	3	2'-0"	4'-7"
414A	6'-7"	3	2'-11"	3'-8"
415A	6'-9"	3	2'-1"	4'-8"
416A	6'-9"	3	3'-0"	3'-9"
417A	6'-11"	3	2'-4"	4'-7"
418A	7'-1"	3	2'-5"	4'-8"
419A	7'-1"	3	3'-5"	3'-8"
420A	7'-3"	3	3'-6"	3'-9"
421A	7'-5"	3	2'-10"	4'-7"
422A	7'-6"	3	2'-11"	4'-7"
423A	7'-7"	3	2'-11"	4'-8"
424A	7'-9"	3	3'-0"	4'-9"
425A	7'-11"	3	2'-4"	5'-7"
426A	8'-1"	3	2'-5"	5'-8"
427A	8'-1"	3	2'-6"	5'-7"
428A	8'-1"	3	3'-5"	4'-8"
429A	8'-1"	3	4'-2"	3'-11"
430A	8'-3"	3	3'-6"	4'-9"
431A	8'-3"	3	4'-3"	4'-0"
432A	8'-5"	3	2'-10"	5'-7"
433A	8'-7"	3	2'-11"	5'-8"
434A	8'-9"	3	3'-0"	5'-9"
435A	8'-10"	3	3'-3"	5'-7"
436A	8'-11"	3	4'-10"	4'-1"
437A	9'-1"	3	3'-5"	5'-8"
438A	9-1"	3	4'-2"	4'-11"
439A	9-3"	3	2'-8"	6'-7"
440A	9'-3"	3	3'-6"	5'-9"
441A	9'-3"	3	4'-3"	5'-0"
442A	9'-5"	3	5'-4"	4'-1"
443A	9'-7"	3	2'-11"	6'-8"
444A	9'-11"	3	4'-10"	5'-1"
445A	10'-1"	3	3'-5"	6'-8"
446A	10'-1"	3	4'-2"	5'-11"
447A	10'-1"	3	4'-11"	5'-2"
448A	10'-3"	3	3'-6"	6'-9"
449A	10'-3"	3	4'-3"	6'-0"
450A	10'-5"	3	5'-4"	5'-1"
451A	10'-8"	3	3'-0"	7'-8"
452A	10'-9"	3	4'-2"	6'-7"
453A	10'-11"	3	4'-10"	6'-1"
454A	11'-1"	3	4'-2"	6'-11"
455A	11'-1"	3	4'-11"	6'-2"
456A	11'-3"	3	3'-8"	7'-7"
457A	11'-3"	3	4'-3"	7'-0"
458A	11'-5"	3	3'-10"	7'-7"
459A	11'-5"	3	5'-4"	6'-1"
460A	11'-9"	3	4'-2"	7'-7"
461A	11'-11"	3	4'-10"	7'-1"
462A	12'-1"	3	4'-2"	7'-11"
463A	12'-1"	3	4'-11"	7'-2"
464A	12'-3"	3	4'-3"	8'-0"
465A	12'-5"	3	5'-4"	7'-1"
466A	12'-6"	3	4'-10"	7'-8"
467A	12'-11"	3	4'-10"	8'-1"
468A	13'-1"	3	4'-11"	8'-2"
469A	13'-3"	3	4'-3"	9'-0"
470A	13'-5"	3	5'-4"	8'-1"
471A	13'-11"	3	4'-10"	9'-1"
472A	14'-1"	3	4'-11"	9'-2"
473A	14'-5"	3	5'-4"	9'-1"
474A	14'-7"	3	5'-8"	8'-11"
475A	15'-5"	3	5'-4"	10'-1"
476A	15'-7"	3	5'-8"	9'-11"
477A	16'-5"	3	5'-4"	11'-1"
478A	16'-6"	3	6'-5"	10'-1"
479A	17'-5"	3	5'-4"	12'-1"

MARK	LENGTH	TYPE	A	B
501A	4'-5"	3	1'-10"	2'-7"
502A	4'-11"	3	2'-4"	2'-7"
503A	5'-1"	3	2'-5"	2'-8"
504A	5'-3"	3	2'-6"	2'-9"
505A	5'-6"	3	1'-11"	3'-7"
506A	5'-9"	3	3'-0"	2'-9"
507A	5'-11"	3	2'-4"	3'-7"
508A	5'-11"	3	3'-1"	2'-10"
509A	6'-1"	3	3'-2"	2'-11"
510A	6'-3"	3	2'-6"	3'-9"
511A	6'-9"	3	2'-2"	4'-7"
512A	6'-11"	3	3'-1"	3'-10"
513A	7'-0"	3	2'-5"	4'-7"
514A	7'-1"	3	2'-5"	4'-8"
515A	7'-1"	3	3'-2"	3'-11"
516A	7'-3"	3	2'-6"	4'-9"
517A	7'-5"	3	3'-7"	3'-10"
518A	7'-7"	3	3'-8"	3'-11"
519A	7'-11"	3	3'-1"	4'-10"
520A	8'-1"	3	2'-5"	5'-8"
521A	8'-1"	3	3'-2"	4'-11"
522A	8'-2"	3	2'-7"	5'-7"
523A	8'-3"	3	2'-6"	5'-9"
524A	8'-3"	3	2'-7"	5'-8"
525A	8'-5"	3	3'-7"	4'-10"
526A	8'-5"	3	4'-4"	4'-1"
527A	8'-7"	3	3'-8"	4'-11"
528A	8'-9"	3	3'-0"	5'-9"
529A	8'-11"	3	3'-1"	5'-10"
530A	9'-1"	3	3'-2"	5'-11"
531A	9'-3"	3	5'-0"	4'-3"
532A	9'-4"	3	3'-9"	5'-7"
533A	9'-5"	3	2'-9"	6'-8"
534A	9'-5"	3	3'-7"	5'-10"
535A	9'-5"	3	4'-4"	5'-1"
536A	9'-6"	3	2'-10"	6'-8"
537A	9'-7"	3	2'-10"	6'-9"
538A	9'-7"	3	3'-8"	5'-11"
539A	9'-7"	3	4'-5"	5'-2"
540A	9'-9"	3	3'-0"	6'-9"
541A	9'-9"	3	5'-6"	4'-3"
542A	9'-11"	3	3'-1"	6'-10"
543A	10'-1"	3	3'-2"	6'-11"
544A	10'-3"	3	5'-0"	5'-3"
545A	10'-5"	3	3'-7"	6'-10"
546A	10'-5"	3	3'-10"	6'-7"
547A	10'-5"	3	4'-4"	6'-1"
548A	10'-7"	3	3'-8"	6'-11"
549A	10'-7"	3	4'-5"	6'-2"
550A	10'-9"	3	3'-0"	7'-9"
551A	10-9"	3	5'-6"	5'-3"
552A	10'-11"	3	3'-1"	7'-10"
553A	11'-1"	3	3'-2"	7'-11"
554A	11'-1"	3	5'-8"	5'-5"
555A	11'-3"	3	3'-6"	7'-9"
556A	11'-3"	3	5'-0"	6'-3"
557A	11'-5"	3	3'-7"	7'-10"
558A	11'-5"	3	4'-4"	7'-1"
559A	11'-7"	3	3'-8"	7'-11"
560A	11'-7"	3	3'-11"	7'-8"
561A	11'-7"	3	4'-5"	7'-2"
562A	11'-9"	3	5'-6"	6'-3"
563A	12'-1"	3	5'-8"	6'-5"
564A	12'-3"	3	5'-0"	7'-3"
565A	12'-5"	3	4'-4"	8'-1"
566A	12'-5"	3	5'-1"	7'-4"
567A	12'-7"	3	4'-5"	8'-2"
568A	13'-1"	3	5'-8"	7'-5"
569A	13'-3"	3	5'-0"	8'-3"
570A	13'-5"	3	4'-4"	9'-1"
571A	13'-5"	3	5'-1"	8'-4"
572A	13'-7"	3	4'-5"	9'-2"
573A	14'-1"	3	5'-8"	8'-5"
574A	14'-3"	3	5'-0"	9'-3"
575A	14'-5"	3	4'-4"	10'-1"
576A	15'-1"	3	5'-8"	9'-5"
577A	15'-3"	3	5'-0"	10'-3"
578A	15'-9"	3	5'-6"	10'-3"
579A	16'-1"	3	5'-8"	10'-5"

MARK	LENGTH	TYPE	A	B
580A	16'-9"	3	5'-6"	11'-3"
581A	17'-1"	3	5'-8"	11'-5"
582A	17'-9"	3	5'-6"	12'-3"
601A	7'-9"	3	3'-9"	4'-0"
602A	8'-7"	3	4'-5"	4'-2"
603A	8'-9"	3	3'-9"	5'-0"
604A	8'-9"	3	4'-6"	4'-3"
605A	9'-5"	3	5'-1"	4'-4"
606A	9'-7"	3	5'-2"	4'-5"
607A	9'-9"	3	3'-9"	6'-0"
608A	9'-9"	3	4'-6"	5'-3"
609A	10'-1"	3	5'-8"	4'-5"
610A	10'-5"	3	5'-1"	5'-4"
611A	10'-5"	3	5'-10"	4'-7"
612A	10'-7"	3	5'-2"	5'-5"
613A	10'-9"	3	3'-9"	7'-0"
614A	10'-9"	3	4'-6"	6'-3"
615A	10'-9"	3	6'-0"	4'-9"
616A	11'-5"	3	5'-1"	6'-4"
617A	11'-5"	3	5'-10"	5'-7"
618A	11'-6"	3	3'-9"	7'-9"
619A	11'-6"	3	3'-10"	7'-8"
620A	11'-7"	3	5'-2"	6'-5"
621A	11'-9"	3	3'-9"	8'-0"
622A	11'-9"	3	4'-6"	7'-3"
623A	11'-9"	3	6'-0"	5'-9"
624A	12'-5"	3	5'-10"	6'-7"
625A	12'-7"	3	5'-2"	7'-5"
626A	12'-9"	3	4'-6"	8'-3"
627A	12'-9"	3	6'-0"	6'-9"
628A	13'-5"	3	5'-10"	7'-7"
629A	13'-7"	3	5'-2"	8'-5"
630A	13'-9"	3	4'-6"	9'-3"
631A	13'-9"	3	6'-0"	7'-9"
632A	14'-5"	3	5'-1"	9'-4"
633A	14'-5"	3	5'-10"	8'-7"
634A	14'-7"	3	4'-5"	10'-2"
635A	14'-7"	3	5'-2"	9'-5"
636A	14'-9"	3	4'-6"	10'-3"
637A	14'-9"	3	6'-0"	8'-9"
638A	15'-5"	3	5'-1"	10'-4"
639A	15'-5"	3	5'-10"	9'-7"
640A	15'-7"	3	5'-2"	10'-5"
641A	15'-9"	3	6'-0"	9'-9"
642A	16'-5"	3	5'-10"	10'-7"
643A	16'-9"	3	6'-0"	10'-9"
644A	17'-5"	3	5'-10"	11'-7"
645A	17'-9"	3	6'-0"	11'-9"
646A	18'-1"	3	5'-8"	12'-5"
647A	18'-5"	3	5'-10"	12'-7"
648A	18'-9"	3	6'-0"	12'-9"
701A	9'-1"	3	4'-11"	4'-2"
702A	12'-9"	3	5'-6"	7'-3"
703A	13'-9"	3	5'-6"	8'-3"
704A	14'-3"	3	4'-3"	10'-0"
705A	14'-9"	3	5'-6"	9'-3"
706A	15'-1"	3	4'-11"	10'-2"

MARK	LENGTH	TYPE	A	B
401B	3'-1 1/2"	6	1'-1 1/2"	0'-6"
402B	3'-1 5/8"	6	1'-1 5/8"	0'-6"
403B	3'-3 1/2"	6	1'-1 1/2"	0'-7"
404B	3'-3 5/8"	6	1'-1 5/8"	0'-7"
405B	3'-3 3/4"	6	1'-1 3/4"	0'-7"
406B	3'-5 1/2"	6	1'-1 1/2"	0'-8"
407B	3'-5 5/8"	6	1'-1 5/8"	0'-8"
408B	3'-5 3/4"	6	1'-1 3/4"	0'-8"
409B	3'-7 5/8"	6	1'-1 5/8"	0'-9"
410B	3'-9 5/8"	6	1'-1 5/8"	0'-10"
411B	3'-11 3/4"	6	1'-1 3/4"	0'-11"
412B	4'-1 5/8"	6	1'-1 5/8"	1'-0"
413B	4'-3 5/8"	6	1'-1 5/8"	1'-1"
414B	4'-3 3/4"	6	1'-1 3/4"	1'-1"
415B	4'-5 5/8"	6	1'-1 5/8"	1'-2"
416B	4'-5 3/4"	6	1'-1 3/4"	1'-2"
417B	4'-7 5/8"	6	1'-1 5/8"	1'-3"
418B	4'-7 3/4"	6	1'-1 3/4"	1'-3"
419B	4'-9 5/8"	6	1'-1 5/8"	1'-4"
420B	4'-9 3/4"	6	1'-1 3/4"	1'-4"
421B	5'-1 3/4"	6	1'-1 3/4"	1'-6"
422B	5'-5 3/4"	6	1'-1 3/4"	1'-8"

*L = LENGTH OF CULVERT

DEPARTMENT OF TRANSPORTATION
STATE OF GEORGIA

STANDARD

REINFORCED CONCRETE SINGLE BOX CULVERT

NO SCALE

SEPTEMBER 2017

DATE	REVISION	BY

DES. YSK
DRW. FGS
TRA. ____
CHK. JWB

(SUBMITTED) _____
STATE DESIGN POLICY ENGINEER

(APPROVED) Margaret B Purdy
CHIEF ENGINEER

NUMBER 2401

SHEET 3 OF 3

STATE	PROJECT NUMBER	SHEET NO.	TOTAL SHEETS
GA.			

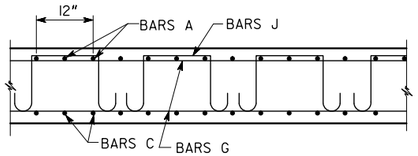

TOP SLAB

NOTE: SPACING OF BARS A AND C IS 6" OR 12". SEE BARREL REINFORCEMENT QUANTITIES AND DIMENSIONS.

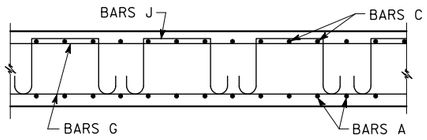

BOTTOM SLAB

NOTE: LONGITUDINAL WINGWALL AND PARAPET BARS EXTEND INTO BARREL. SEE WINGWALL AND PARAPET STANDARDS.

SECTION A-A

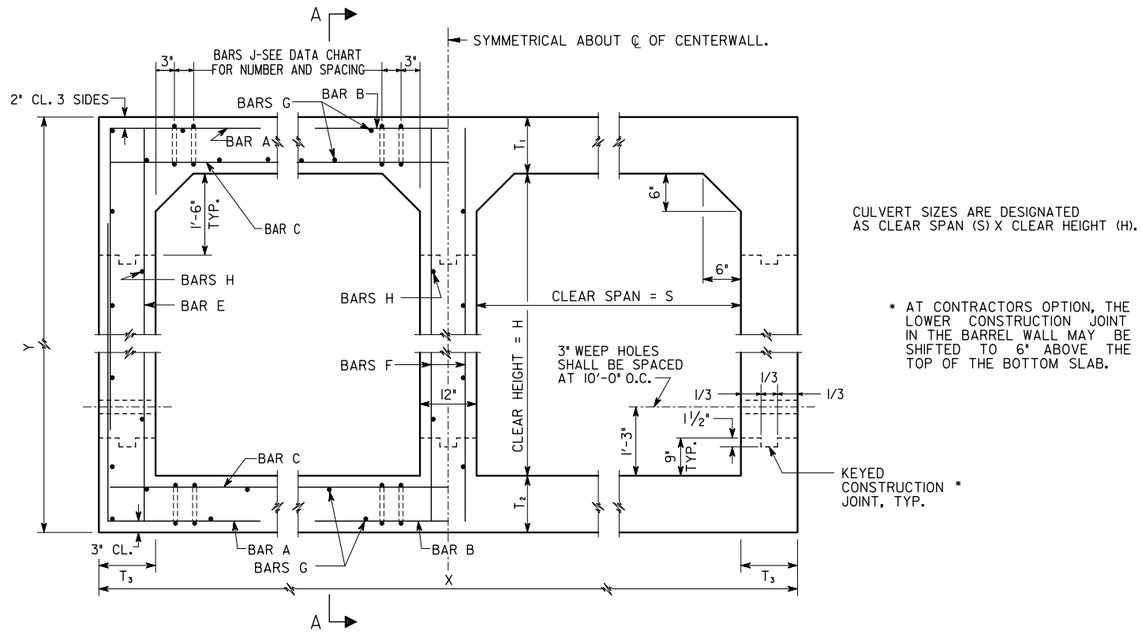

CULVERT SIZES ARE DESIGNATED AS CLEAR SPAN (S) X CLEAR HEIGHT (H).

* AT CONTRACTORS OPTION, THE LOWER CONSTRUCTION JOINT IN THE BARREL WALL MAY BE SHIFTED TO 6" ABOVE THE TOP OF THE BOTTOM SLAB.

TYPICAL BARREL SECTION-ALL DESIGNS

DESIGN	1	2	3	4	5	6	7	8
MAXIMUM FILL HEIGHT	10'	20'	30'	40'	50'	60'	70'	80'

1) MINIMUM HEIGHT FROM TOP OF CULVERT TO BOTTOM OF BASE WITHIN TRAVELWAY SHALL BE 1'-0".

2) DESIGN OF THE CULVERT SHALL BE DETERMINED BY THE MAXIMUM HEIGHT OF FILL WITH ONLY A SINGLE DESIGN BEING USED FOR THE ENTIRE INSTALLATION.

3) TRANSVERSE CONSTRUCTION JOINTS SHALL BE PLACED NORMAL TO THE CENTERLINE OF THE CULVERT AT THE OUTSIDE SHOULDER BREAK POINTS. THE MAXIMUM POUR LENGTH ALONG THE LENGTH OF THE CULVERT SHALL NOT EXCEED 40'-0" FOR DESIGNS 1 TO 3 AND 30'-0" FOR DESIGNS 4 AND ABOVE.

4) LONGITUDINAL BARREL REINFORCEMENT STEEL IN THE TRANSVERSE CONSTRUCTION JOINTS SHALL EXTEND THROUGH JOINTS.

5) CONSTRUCTION JOINTS SHALL BE WATERPROOFED ON THE EXTERIOR TOP AND SIDES OF BARREL IN ACCORDANCE WITH SECTION 530 OF GEORGIA STANDARD SPECIFICATIONS. WATERFPROOFING SHALL BE APPLIED WHEN CONCRETE IS AT LEAST 7 DAYS OLD. ALL COSTS ASSOCIATED WITH WATERPROOFING SHALL BE INCLUDED IN OTHER ITEMS AND WILL NOT BE MEASURED SEPARATELY FOR PAYMENT.

6) MINIMUM LENGTH OF LAP SPLICE FOR LONGITUDINAL BARREL REINFORCING STEEL SHALL BE 2'-0".

FOR BAR DIMENSIONS SEE BAR REINFORCEMENT DETAILS. NUMBER OF J BARS SHOWN IN DATA CHART IS THE NUMBER PER CORNER IN ANY ONE TRANSVERSE PLANE. THE TOTAL NUMBER OF J BARS REQUIRED DEPENDS UPON THE LENGTH OF THE SECTION.



TYPE 1

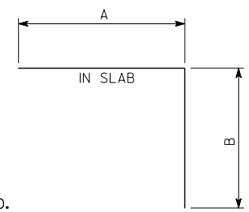

TYPE 3

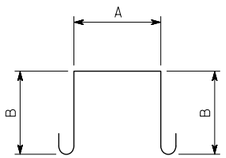

BAR L - NO. 4

TYPE 6

A = 12" + DIAMETER BAR A + 1"
B = T_1 - 3"

GENERAL NOTES

1) SPECIFICATIONS: GEORGIA STANDARD, CURRENT EDITION & SUPPLEMENTS THERETO.

2) ALL CONCRETE SHALL BE CLASS "AA".

3) CHAMFER ALL EXPOSED EDGES ¾".

4) COST OF DRAIN PIPES, WEEP HOLES, COARSE AGGREGATE, AND ANY OTHER INCIDENTAL ITEMS SHALL BE INCLUDED IN THE PRICE BID FOR CONTRACT ITEMS.

5) CONSTRUCTION JOINTS IN BARREL WALLS ARE REQUIRED.

6) FOR DETAILS OF WINGWALLS AND PARAPETS SEE "REINFORCED CONCRETE WINGWALLS, TOEWALLS AND PARAPETS FOR CONCRETE BOX CULVERTS" SHEETS.

DESIGN DATA

SPECIFICATIONS - AASHTO LRFD BRIDGE DESIGN SPECIFICATIONS, 7TH EDITION, 2014.
TYPICAL HL-93 LOADING.

DEPARTMENT OF TRANSPORTATION
STATE OF GEORGIA

STANDARD

REINFORCED CONCRETE DOUBLE BOX CULVERT

NO SCALE

SEPTEMBER 2017

DATE | REVISION | BY

DES. YSK
DRW. FGS
TRA. ___
CHK. JWB

(SUBMITTED) STATE DESIGN POLICY ENGINEER

(APPROVED) Margaret B Purkle CHIEF ENGINEER

NUMBER 2402

SHEET 1 OF 3

STATE	PROJECT NUMBER	SHEET NO.	TOTAL SHEETS
GA.			

DOUBLE 4'-0" X 3'-0" BOX CULVERT

BARREL REINFORCEMENT QUANTITIES AND DIMENSIONS

DESIGN	1	2	3	4	5	6	7	8
BAR A	404A @ 12"	501A @ 12"	401A @ 6"	401A @ 6"	403A @ 6"			
BAR B	516 @ 12"	404 @ 6"	407 @ 6"	407 @ 6"	502 @ 6"			
BAR C	542 @ 12"	451@ 6"	451@ 6"	451@ 6"	543 @ 6"			
BAR E	406 @ 12"	406 @ 12"	406 @ 12"	406 @ 12"	408 @ 12"			
BAR F	406 @ 12"	406 @ 12"	406 @ 12"	406 @ 12"	408 @ 12"			
BAR G IN 2 SLABS	32 - 401	32 - 401	32 - 401	32 - 401	32 - 401			
BAR H IN 3 WALLS	14 - 402	14 - 402	14 - 402	14 - 402	14 - 402			
BAR J IN EXT. CORNER	0	0	0	3-401B @ 4½"	2-403B @ 5"			
BAR J IN INT. CORNER	0	0	3-401B @ 4½"	4-401B @ 4½"	4-404B @ 5"			
T_1	8"	8"	8"	8"	9"			
T_2	9"	9"	9"	9"	10"			
T_3	8"	8"	8"	8"	9"			
X	10'-4"	10'-4"	10'-4"	10'-4"	10'-6"			
Y	4'-5"	4'-5"	4'-5"	4'-5"	4'-7"			
YD³ CLASS AA CONCRETE/FT	0.820	0.820	0.820	0.820	0.912			
LB BAR REINF STEEL/FT	87.2	96.2	113.8	130.5	151.3			
PARAPET, BARREL END, AND TOEWALL QUANTITIES - 90° SKEW - TOTAL								
YD³ CLASS AA CONCRETE	3.8	3.8	3.8	3.8	3.9			
LB BAR REINF STEEL	655	655	655	655	656			
PARAPET, BARREL END, AND TOEWALL QUANTITIES - 75° SKEW - TOTAL								
YD³ CLASS AA CONCRETE	4.0	4.0	4.0	4.0	4.1			
LB BAR REINF STEEL	813	813	813	813	817			
PARAPET, BARREL END, AND TOEWALL QUANTITIES - 60° SKEW - TOTAL								
YD³ CLASS AA CONCRETE	4.4	4.4	4.4	4.4	4.5			
LB BAR REINF STEEL	862	862	862	862	866			
PARAPET, BARREL END, AND TOEWALL QUANTITIES - 45° SKEW - TOTAL								
YD³ CLASS AA CONCRETE	5.5	5.5	5.5	5.5	5.6			
LB BAR REINF STEEL	988	988	988	988	994			

DOUBLE 4'-0" X 4'-0" BOX CULVERT

BARREL REINFORCEMENT QUANTITIES AND DIMENSIONS

DESIGN	1	2	3	4	5	6	7	8
BAR A	415A @ 12"	504A @ 12"	411A @ 6"	411A @ 6"	412A @ 6"			
BAR B	522 @ 12"	403 @ 6"	404 @ 6"	405 @ 6"	502 @ 6"			
BAR C	542 @ 12"	451@ 6"	451@ 6"	542 @ 6"	543 @ 6"			
BAR E	414 @ 12"	414 @ 12"	414 @ 12"	414 @ 12"	415 @ 12"			
BAR F	414 @ 12"	414 @ 12"	414 @ 12"	414 @ 12"	415 @ 12"			
BAR G IN 2 SLABS	32 - 401	32 - 401	32 - 401	32 - 401	32 - 401			
BAR H IN 3 WALLS	18 - 402	18 - 402	18 - 402	18 - 402	18 - 402			
BAR J IN EXT. CORNER	0	0	0	3-401B @ 4½"	3-403B @ 5"			
BAR J IN INT. CORNER	0	0	3-401B @ 4½"	4-401B @ 4½"	4-404B @ 5"			
T_1	8"	8"	8"	8"	9"			
T_2	9"	9"	9"	9"	10"			
T_3	8"	8"	8"	8"	9"			
X	10'-4"	10'-4"	10'-4"	10'-4"	10'-6"			
Y	5'-5"	5'-5"	5'-5"	5'-5"	5'-7"			
YD³ CLASS AA CONCRETE/FT	0.906	0.906	0.906	0.906	1.005			
LB BAR REINF STEEL/FT	97.9	106.0	124.5	156.7	166.8			
PARAPET, BARREL END, AND TOEWALL QUANTITIES - 90° SKEW - TOTAL								
YD³ CLASS AA CONCRETE	4.3	4.3	4.3	4.3	4.4			
LB BAR REINF STEEL	690	690	690	690	692			
PARAPET, BARREL END, AND TOEWALL QUANTITIES - 75° SKEW - TOTAL								
YD³ CLASS AA CONCRETE	4.5	4.5	4.5	4.5	4.6			
LB BAR REINF STEEL	850	850	850	850	853			
PARAPET, BARREL END, AND TOEWALL QUANTITIES - 60° SKEW - TOTAL								
YD³ CLASS AA CONCRETE	5.0	5.0	5.0	5.0	5.2			
LB BAR REINF STEEL	899	899	899	899	903			
PARAPET, BARREL END, AND TOEWALL QUANTITIES - 45° SKEW - TOTAL								
YD³ CLASS AA CONCRETE	6.2	6.2	6.2	6.2	6.4			
LB BAR REINF STEEL	1027	1027	1027	1027	1032			

DOUBLE 4'-0" X 5'-0" BOX CULVERT

DESIGN	1	2	3	4	5	6	7	8
BAR A	441A @ 12"	508A @ 12"	420A @ 6"	422A @ 6"	425A @ 6"			
BAR B	517 @ 12"	403 @ 6"	403 @ 6"	405 @ 6"	502 @ 6"			
BAR C	542 @ 12"	451@ 6"	451 @ 6"	542 @ 6"	543 @ 6"			
BAR E	420 @ 12"	420 @ 12"	513 @ 12"	513 @ 12"	514 @ 12"			
BAR F	420 @ 12"	420 @ 12"	420 @ 12"	420 @ 12"	421@ 12"			
BAR G IN 2 SLABS	32 - 401	32 - 401	32 - 401	32 - 401	32 - 401			
BAR H IN 3 WALLS	20 - 402	20 - 402	20 - 402	20 - 402	20 - 402			
BAR J IN EXT. CORNER	0	0	0	3-401B @ 4½"	3-403B @ 5"			
BAR J IN INT. CORNER	0	0	3-401B @ 4½"	4-401B @ 4½"	4-404B @ 5"			
T_1	8"	8"	8"	8"	9"			
T_2	9"	9"	9"	9"	10"			
T_3	8"	8"	8"	8"	9"			
X	10'-4"	10'-4"	10'-4"	10'-4"	10'-6"			
Y	6'-5"	6'-5"	6'-5"	6'-5"	6'-7"			
YD³ CLASS AA CONCRETE/FT	0.993	0.993	0.993	0.993	1.097			
LB BAR REINF STEEL/FT	106.3	114.9	138.8	171.9	182.5			
PARAPET, BARREL END, AND TOEWALL QUANTITIES - 90° SKEW - TOTAL								
YD³ CLASS AA CONCRETE	4.5	4.5	4.5	4.5	4.6			
LB BAR REINF STEEL	714	714	714	714	716			
PARAPET, BARREL END, AND TOEWALL QUANTITIES - 75° SKEW - TOTAL								
YD³ CLASS AA CONCRETE	4.7	4.7	4.7	4.7	4.8			
LB BAR REINF STEEL	874	874	874	874	878			
PARAPET, BARREL END, AND TOEWALL QUANTITIES - 60° SKEW - TOTAL								
YD³ CLASS AA CONCRETE	5.2	5.2	5.2	5.2	5.4			
LB BAR REINF STEEL	924	924	924	924	928			
PARAPET, BARREL END, AND TOEWALL QUANTITIES - 45° SKEW - TOTAL								
YD³ CLASS AA CONCRETE	6.5	6.5	6.5	6.5	6.7			
LB BAR REINF STEEL	1053	1053	1053	1053	1058			

DOUBLE 4'-0" X 6'-0" BOX CULVERT

BARREL REINFORCEMENT QUANTITIES AND DIMENSIONS

DESIGN	1	2	3	4	5	6	7	8
BAR A	452A @ 12"	439A @ 6"	439A @ 6"	518A @ 6"	521A @ 6"			
BAR B	517 @ 12"	403 @ 6"	403 @ 6"	405 @ 6"	502 @ 6"			
BAR C	542 @ 12"	451@ 6"	451@ 6"	542 @ 6"	543 @ 6"			
BAR E	428 @ 12"	519 @ 12"	519 @ 12"	428 @ 6"	429 @ 6"			
BAR F	428 @ 12"	428 @ 12"	428 @ 12"	428 @ 12"	429 @ 12"			
BAR G IN 2 SLABS	32 - 401	32 - 401	32 - 401	32 - 401	32 - 401			
BAR H IN 3 WALLS	26 - 402	26 - 402	26 - 402	26 - 402	26 - 402			
BAR J IN EXT. CORNER	0	0	2-401B @ 4½"	3-402B @ 4½"	3-404B @ 5"			
BAR J IN INT. CORNER	0	0	3-401B @ 4½"	4-401B @ 4½"	4-404B @ 5"			
T_1	8"	8"	8"	8"	9"			
T_2	9"	9"	9"	9"	10"			
T_3	8"	8"	8"	8"	9"			
X	10'-4"	10'-4"	10'-4"	10'-4"	10'-6"			
Y	7'-5"	7'-5"	7'-5"	7'-5"	7'-7"			
YD³ CLASS AA CONCRETE/FT	1.079	1.079	1.079	1.079	1.190			
LB BAR REINF STEEL/FT	115.6	140.9	161.7	214.3	225.6			
PARAPET, BARREL END, AND TOEWALL QUANTITIES - 90° SKEW - TOTAL								
YD³ CLASS AA CONCRETE	4.7	4.7	4.7	4.7	4.8			
LB BAR REINF STEEL	764	764	764	764	765			
PARAPET, BARREL END, AND TOEWALL QUANTITIES - 75° SKEW - TOTAL								
YD³ CLASS AA CONCRETE	4.9	4.9	4.9	4.9	5.0			
LB BAR REINF STEEL	926	926	926	926	929			
PARAPET, BARREL END, AND TOEWALL QUANTITIES - 60° SKEW - TOTAL								
YD³ CLASS AA CONCRETE	5.4	5.4	5.4	5.4	5.6			
LB BAR REINF STEEL	976	976	976	976	981			
PARAPET, BARREL END, AND TOEWALL QUANTITIES - 45° SKEW - TOTAL								
YD³ CLASS AA CONCRETE	6.7	6.7	6.7	6.7	6.9			
LB BAR REINF STEEL	1107	1107	1107	1107	1113			

DEPARTMENT OF TRANSPORTATION
STATE OF GEORGIA

STANDARD

REINFORCED CONCRETE DOUBLE BOX CULVERT 4'X3', 4'X4', 4'X5' AND 4'X6'

NO SCALE — SEPTEMBER 2017

DATE | REVISION | BY

DES. YSK
DRW. FCS
TRA. ____
CHK. JWB

(SUBMITTED) STATE DESIGN POLICY ENGINEER

(APPROVED) Margaret B Pirkle CHIEF ENGINEER

NUMBER 2402

SHEET 2A OF 3

STATE	PROJECT NUMBER	SHEET NO.	TOTAL SHEETS
GA.			

DOUBLE 5′-0″ X 3′-0″ BOX CULVERT

BARREL REINFORCEMENT QUANTITIES AND DIMENSIONS

DESIGN	1	2	3	4	5	6	7	8
BAR A	502A @ 12″	402A @ 6″	403A @ 6″	405A @ 6″	409A @ 6″			
BAR B	423 @ 6″	419 @ 6″	513 @ 6″	512 @ 6″	509 @ 6″			
BAR C	463 @ 6″	463 @ 6″	464 @ 6″	554 @ 6″	555 @ 6″			
BAR E	406 @ 12″	406 @ 12″	408 @ 12″	408 @ 12″	410 @ 12″			
BAR F	406 @ 12″	406 @ 12″	408 @ 12″	408 @ 12″	410 @ 12″			
BAR G IN 2 SLABS	36 - 401	36 - 401	40 - 401	40 - 401	40 - 401			
BAR H IN 3 WALLS	14 - 402	14 - 402	14 - 402	14 - 402	14 - 402			
BAR J IN EXT. CORNER	0	0	0	3-403B @ 5″	3-406B @ 5¾″			
BAR J IN INT. CORNER	0	0	3-404B @ 5″	4-404B @ 5″	4-407B @ 5¾″			
T_1	8″	8″	9″	9″	10″			
T_2	9″	9″	10″	10″	11″			
T_3	8″	8″	9″	9″	10″			
X	12′-4″	12′-4″	12′-6″	12′-6″	12′-8″			
Y	4′-5″	4′-5″	4′-7″	4′-7″	4′-9″			
YD³ CLASS AA CONCRETE/FT	0.925	0.925	1.029	1.029	1.136			
LB BAR REINF STEEL/FT	112.8	114.5	141.1	176.7	179.8			
PARAPET, BARREL END, AND TOEWALL QUANTITIES - 90° SKEW - TOTAL								
YD³ CLASS AA CONCRETE	4.4	4.4	4.5	4.5	4.6			
LB BAR REINF STEEL	736	736	775	775	776			
PARAPET, BARREL END, AND TOEWALL QUANTITIES - 75° SKEW - TOTAL								
YD³ CLASS AA CONCRETE	4.6	4.6	4.7	4.7	4.8			
LB BAR REINF STEEL	921	921	962	962	965			
PARAPET, BARREL END, AND TOEWALL QUANTITIES - 60° SKEW - TOTAL								
YD³ CLASS AA CONCRETE	5.2	5.2	5.3	5.3	5.4			
LB BAR REINF STEEL	978	978	1020	1020	1023			
PARAPET, BARREL END, AND TOEWALL QUANTITIES - 45° SKEW - TOTAL								
YD³ CLASS AA CONCRETE	6.4	6.4	6.5	6.5	6.7			
LB BAR REINF STEEL	1121	1121	1165	1165	1170			

DOUBLE 5′-0″ X 4′-0″ BOX CULVERT

BARREL REINFORCEMENT QUANTITIES AND DIMENSIONS

DESIGN	1	2	3	4	5	6	7	8
BAR A	505A @ 12″	411A @ 6″	413A @ 6″	413A @ 6″	416A @ 6″			
BAR B	427 @ 6″	418 @ 6″	510 @ 6″	510 @ 6″	603 @ 6″			
BAR C	463 @ 6″	463 @ 6″	464 @ 6″	554 @ 6″	555 @ 6″			
BAR E	414 @ 12″	414 @ 12″	415 @ 12″	415 @ 12″	416 @ 12″			
BAR F	414 @ 12″	414 @ 12″	415 @ 12″	415 @ 12″	416 @ 12″			
BAR G IN 2 SLABS	36 - 401	36 - 401	40 - 401	40 - 401	40 - 401			
BAR H IN 3 WALLS	18 - 402	18 - 402	18 - 402	18 - 402	18 - 402			
BAR J IN EXT. CORNER	0	0	0	3-403B @ 5″	3-406B @ 5¾″			
BAR J IN INT. CORNER	0	2 - 401B @ 4½″	3-404B @ 5″	4-404B @ 5″	4-408B @ 5¾″			
T_1	8″	8″	9″	9″	10″			
T_2	9″	9″	10″	10″	11″			
T_3	8″	8″	9″	9″	10″			
X	12′-4″	12′-4″	12′-6″	12′-6″	12′-8″			
Y	5′-5″	5′-5″	5′-7″	5′-7″	5′-9″			
YD³ CLASS AA CONCRETE/FT	1.011	1.011	1.122	1.122	1.235			
LB BAR REINF STEEL/FT	123.6	133.5	151.3	187.2	200.7			
PARAPET, BARREL END, AND TOEWALL QUANTITIES - 90° SKEW - TOTAL								
YD³ CLASS AA CONCRETE	5.0	5.0	5.1	5.1	5.3			
LB BAR REINF STEEL	773	773	813	813	814			
PARAPET, BARREL END, AND TOEWALL QUANTITIES - 75° SKEW - TOTAL								
YD³ CLASS AA CONCRETE	5.2	5.2	5.4	5.4	5.5			
LB BAR REINF STEEL	959	959	1002	1002	1005			
PARAPET, BARREL END, AND TOEWALL QUANTITIES - 60° SKEW - TOTAL								
YD³ CLASS AA CONCRETE	5.8	5.8	6.0	6.0	6.1			
LB BAR REINF STEEL	1016	1016	1059	1059	1063			
PARAPET, BARREL END, AND TOEWALL QUANTITIES - 45° SKEW - TOTAL								
YD³ CLASS AA CONCRETE	7.2	7.2	7.4	7.4	7.6			
LB BAR REINF STEEL	1161	1161	1206	1206	1211			

DATE | REVISION | BY

DEPARTMENT OF TRANSPORTATION
STATE OF GEORGIA

STANDARD

REINFORCED CONCRETE
DOUBLE BOX CULVERT
5′X3′ AND 5′X4′

NO SCALE — SEPTEMBER 2017

DES. YSK
DRW. FGS
TRA. ___
CHK. JWB

(SUBMITTED) STATE DESIGN POLICY ENGINEER
(APPROVED) Margaret B Pirkle CHIEF ENGINEER

NUMBER 2402

STATE	PROJECT NUMBER	SHEET NO.	TOTAL SHEETS
GA.			

DOUBLE 5'-0" X 5'-0" BOX CULVERT

BARREL REINFORCEMENT QUANTITIES AND DIMENSIONS

DESIGN	1	2	3	4	5	6	7	8
BAR A	510A @ 12"	420A @ 6"	423A @ 6"	423A @ 6"	429A @ 6"			
BAR B	433 @ 6"	416 @ 6"	508 @ 6"	508 @ 6"	602 @ 6"			
BAR C	463 @ 6"	463 @ 6"	464 @ 6"	554 @ 6"	555 @ 6"			
BAR E	420 @ 12"	420 @ 12"	421 @ 12"	421 @ 12"	422 @ 12"			
BAR F	420 @ 12"	420 @ 12"	421 @ 12"	421 @ 12"	422 @ 12"			
BAR G IN 2 SLABS	36 - 401	36 - 401	40 - 401	40 - 401	40 - 401			
BAR H IN 3 WALLS	20 - 402	20 - 402	20 - 402	20 - 402	20 - 402			
BAR J IN EXT. CORNER	0	0	0	3-403B @ 5"	3-406B @ 5¾"			
BAR J IN INT. CORNER	0	2-401B @ 4½"	3-404B @ 5"	4-404B @ 5"	4-408B @ 5¾"			
T_1	8"	8"	9"	9"	10"			
T_2	9"	9"	10"	10"	11"			
T_3	8"	8"	9"	9"	10"			
X	12'-4"	12'-4"	12'-6"	12'-6"	12'-8"			
Y	6'-5"	6'-5"	6'-7"	6'-7"	6'-9"			
YD³ CLASS AA CONCRETE/FT	1.098	1.098	1.215	1.215	1.333			
LB BAR REINF STEEL/FT	135.0	142.8	160.2	196.0	209.4			
PARAPET, BARREL END, AND TOEWALL QUANTITIES - 90° SKEW - TOTAL								
YD³ CLASS AA CONCRETE	5.2	5.2	5.3	5.3	5.5			
LB BAR REINF STEEL	797	797	837	837	838			
PARAPET, BARREL END, AND TOEWALL QUANTITIES - 75° SKEW - TOTAL								
YD³ CLASS AA CONCRETE	5.4	5.4	5.6	5.6	5.7			
LB BAR REINF STEEL	984	984	1026	1026	1029			
PARAPET, BARREL END, AND TOEWALL QUANTITIES - 60° SKEW - TOTAL								
YD³ CLASS AA CONCRETE	6.0	6.0	6.2	6.2	6.4			
LB BAR REINF STEEL	1041	1041	1084	1084	1088			
PARAPET, BARREL END, AND TOEWALL QUANTITIES - 45° SKEW - TOTAL								
YD³ CLASS AA CONCRETE	7.5	7.5	7.7	7.7	7.9			
LB BAR REINF STEEL	1187	1187	1231	1231	1236			

DOUBLE 5'-0" X 7'-0" BOX CULVERT

BARREL REINFORCEMENT QUANTITIES AND DIMENSIONS

DESIGN	1	2	3	4	5	6	7	8
BAR A	546A @ 12"	455A @ 6"	532A @ 6"	532A @ 6"	536A @ 6"			
BAR B	430 @ 6"	409 @ 6"	503 @ 6"	504 @ 6"	601 @ 6"			
BAR C	463 @ 6"	463 @ 6"	464 @ 6"	554 @ 6"	555 @ 6"			
BAR E	437 @ 12"	531 @ 12"	532 @ 12"	438 @ 6"	613 @ 12"			
BAR F	437 @ 12"	437 @ 12"	438 @ 12"	438 @ 12"	440 @ 12"			
BAR G IN 2 SLABS	36 - 401	36 - 401	40 - 401	40 - 401	40 - 401			
BAR H IN 3 WALLS	30 - 402	30 - 402	30 - 402	30 - 402	30 - 402			
BAR J IN EXT. CORNER	0	0	3-404B @ 5"	4-404B @ 5"	4-407B @ 5¾"			
BAR J IN INT. CORNER	0	2-401B @ 4½"	3-404B @ 5"	4-404B @ 5"	4-408B @ 5¾"			
T_1	8"	8"	9"	9"	10"			
T_2	9"	9"	10"	10"	11"			
T_3	8"	8"	9"	9"	10"			
X	12'-4"	12'-4"	12'-6"	12'-6"	12'-8"			
Y	8'-5"	8'-5"	8'-7"	8'-7"	8'-9"			
YD³ CLASS AA CONCRETE/FT	1.271	1.271	1.400	1.400	1.531			
LB BAR REINF STEEL/FT	160.4	171.8	230.0	263.2	279.3			
PARAPET, BARREL END, AND TOEWALL QUANTITIES - 90° SKEW - TOTAL								
YD³ CLASS AA CONCRETE	5.6	5.6	5.7	5.7	5.9			
LB BAR REINF STEEL	874	874	914	914	915			
PARAPET, BARREL END, AND TOEWALL QUANTITIES - 75° SKEW - TOTAL								
YD³ CLASS AA CONCRETE	5.8	5.8	6.0	6.0	6.2			
LB BAR REINF STEEL	1063	1063	1106	1106	1109			
PARAPET, BARREL END, AND TOEWALL QUANTITIES - 60° SKEW - TOTAL								
YD³ CLASS AA CONCRETE	6.5	6.5	6.7	6.7	6.9			
LB BAR REINF STEEL	1122	1122	1165	1165	1169			
PARAPET, BARREL END, AND TOEWALL QUANTITIES - 45° SKEW - TOTAL								
YD³ CLASS AA CONCRETE	8.0	8.0	8.2	8.2	8.5			
LB BAR REINF STEEL	1271	1271	1316	1316	1321			

DOUBLE 5'-0" X 6'-0" BOX CULVERT

BARREL REINFORCEMENT QUANTITIES AND DIMENSIONS

DESIGN	1	2	3	4	5	6	7	8
BAR A	534A @ 12"	437A @ 6"	438A @ 6"	519A @ 6"	522A @ 6"			
BAR B	430 @ 6"	413 @ 6"	506 @ 6"	504 @ 6"	601 @ 6"			
BAR C	463 @ 6"	463 @ 6"	464 @ 6"	554 @ 6"	555 @ 6"			
BAR E	428 @ 12"	519 @ 12"	521 @ 12"	521 @ 12"	523 @ 12"			
BAR F	428 @ 12"	428 @ 12"	429 @ 12"	429 @ 12"	431 @ 12"			
BAR G IN 2 SLABS	36 - 401	36 - 401	40 - 401	40 - 401	40 - 401			
BAR H IN 3 WALLS	26 - 402	26 - 402	26 - 402	26 - 402	26 - 402			
BAR J IN EXT. CORNER	0	0	2-403B @ 5"	4-404B @ 5"	4-407B @ 5¾"			
BAR J IN INT. CORNER	0	2-401B @ 4½"	3-404B @ 5"	4-404B @ 5"	4-408B @ 5¾"			
T_1	8"	8"	9"	9"	10"			
T_2	9"	9"	10"	10"	11"			
T_3	8"	8"	9"	9"	10"			
X	12'-4"	12'-4"	12'-6"	12'-6"	12'-8"			
Y	7'-5"	7'-5"	7'-7"	7'-7"	7'-9"			
YD³ CLASS AA CONCRETE/FT	1.184	1.184	1.307	1.307	1.432			
LB BAR REINF STEEL/FT	150.8	160.1	185.9	241.2	255.1			
PARAPET, BARREL END, AND TOEWALL QUANTITIES - 90° SKEW - TOTAL								
YD³ CLASS AA CONCRETE	5.4	5.4	5.5	5.5	5.7			
LB BAR REINF STEEL	847	847	887	887	888			
PARAPET, BARREL END, AND TOEWALL QUANTITIES - 75° SKEW - TOTAL								
YD³ CLASS AA CONCRETE	5.6	5.6	5.7	5.7	5.9			
LB BAR REINF STEEL	1035	1035	1078	1078	1081			
PARAPET, BARREL END, AND TOEWALL QUANTITIES - 60° SKEW - TOTAL								
YD³ CLASS AA CONCRETE	6.2	6.2	6.4	6.4	6.6			
LB BAR REINF STEEL	1093	1093	1137	1137	1140			
PARAPET, BARREL END, AND TOEWALL QUANTITIES - 45° SKEW - TOTAL								
YD³ CLASS AA CONCRETE	7.7	7.7	7.9	7.9	8.1			
LB BAR REINF STEEL	1241	1241	1286	1286	1291			

DOUBLE 5'-0" X 8'-0" BOX CULVERT

BARREL REINFORCEMENT QUANTITIES AND DIMENSIONS

DESIGN	1	2	3	4	5	6	7	8
BAR A	468A @ 6"	547A @ 6"	548A @ 6"	602A @ 6"	603A @ 6"			
BAR B	430 @ 6"	411 @ 6"	503 @ 6"	505 @ 6"	601 @ 6"			
BAR C	463 @ 6"	463 @ 6"	464 @ 6"	554 @ 6"	555 @ 6"			
BAR E	537 @ 12"	444 @ 6"	708 @ 12"	538 @ 6"	539 @ 6"			
BAR F	444 @ 12"	444 @ 12"	445 @ 12"	445 @ 12"	447 @ 12"			
BAR G IN 2 SLABS	36 - 401	36 - 401	40 - 401	36 - 401	40 - 401			
BAR H IN 3 WALLS	32 - 402	32 - 402	32 - 402	32 - 402	32 - 402			
BAR J IN EXT. CORNER	0	2-402B @ 4½"	3-404B @ 5"	4-405B @ 5"	4-408B @ 5¾"			
BAR J IN INT. CORNER	0	3-401B @ 4½"	3-404B @ 5"	4-404B @ 5"	4-408B @ 5¾"			
T_1	8"	8"	9"	9"	10"			
T_2	9"	9"	10"	10"	11"			
T_3	8"	8"	9"	9"	10"			
X	12'-4"	12'-4"	12'-6"	12'-6"	12'-8"			
Y	9'-5"	9'-5"	9'-7"	9'-7"	9'-9"			
YD³ CLASS AA CONCRETE/FT	1.357	1.357	1.492	1.492	1.630			
LB BAR REINF STEEL/FT	183.8	234.1	263.5	331.4	347.9			
PARAPET, BARREL END, AND TOEWALL QUANTITIES - 90° SKEW - TOTAL								
YD³ CLASS AA CONCRETE	5.8	5.8	6.0	6.0	6.2			
LB BAR REINF STEEL	900	900	941	901	941			
PARAPET, BARREL END, AND TOEWALL QUANTITIES - 75° SKEW - TOTAL								
YD³ CLASS AA CONCRETE	6.1	6.1	6.3	6.3	6.4			
LB BAR REINF STEEL	1090	1090	1133	1093	1136			
PARAPET, BARREL END, AND TOEWALL QUANTITIES - 60° SKEW - TOTAL								
YD³ CLASS AA CONCRETE	6.8	6.8	7.0	7.0	7.2			
LB BAR REINF STEEL	1149	1149	1192	1153	1196			
PARAPET, BARREL END, AND TOEWALL QUANTITIES - 45° SKEW - TOTAL								
YD³ CLASS AA CONCRETE	8.4	8.4	8.6	8.6	8.9			
LB BAR REINF STEEL	1299	1299	1344	1304	1349			

DEPARTMENT OF TRANSPORTATION
STATE OF GEORGIA

STANDARD

REINFORCED CONCRETE DOUBLE BOX CULVERT 5'X5', 5'X6', 5'X7' AND 5'X8'

NO SCALE — SEPTEMBER 2017

DATE | REVISION | BY

DES. YSK
DRW. FGS
TRA. ____
CHK. JWB

(SUBMITTED) STATE DESIGN POLICY ENGINEER

(APPROVED) Margaret B Pirkle CHIEF ENGINEER

NUMBER 2402

SHEET 2C OF 3

STATE	PROJECT NUMBER	SHEET NO.	TOTAL SHEETS
GA.			

DOUBLE 6'-0" X 3'-0" BOX CULVERT

BARREL REINFORCEMENT QUANTITIES AND DIMENSIONS

DESIGN	1	2	3	4	5	6	7	8
BAR A	408A @ 6"	406A @ 6"	407A @ 6"	410A @ 6"	503A @ 6"			
BAR B	430 @ 6"	528 @ 6"	530 @ 6"	611@ 6"	610 @ 6"			
BAR C	471@ 6"	472 @ 6"	563 @ 6"	564 @ 6"	565 @ 6"			
BAR E	406 @ 12"	408 @ 12"	410 @ 12"	411 @ 12"	412 @ 12"			
BAR F	501 @ 12"	408 @ 12"	410 @ 12"	411 @ 12"	412 @ 12"			
BAR G IN 2 SLABS	44 - 401	44 - 401	44 - 401	44 - 401	48 - 401			
BAR H IN 3 WALLS	14 - 402	14 - 402	14 - 402	14 - 402	14 - 402			
BAR J IN EXT. CORNER	0	0	0	3-409B @ 6¼"	3-414B @ 7"			
BAR J IN INT. CORNER	0	3-404B @ 5"	4-407B @ 5¾"	4-411B @ 6¼"	4-415B @ 7"			
T_1	8"	9"	10"	11"	12"			
T_2	9"	10"	11"	12"	13"			
T_3	8"	9"	10"	11"	12"			
X	14'-4"	14'-6"	14'-8"	14'-10"	15'-0"			
Y	4'-5"	4'-7"	4'-9"	4'-11"	5'-1"			
YD^3 CLASS AA CONCRETE/FT	1.030	1.147	1.265	1.386	1.509			
LB BAR REINF STEEL/FT	134.2	157.3	186.2	216.1	238.1			
PARAPET, BARREL END, AND TOEWALL QUANTITIES - 90° SKEW - TOTAL								
YD^3 CLASS AA CONCRETE	5.1	5.2	5.3	5.4	5.5			
LB BAR REINF STEEL	856	857	858	859	896			
PARAPET, BARREL END, AND TOEWALL QUANTITIES - 75° SKEW - TOTAL								
YD^3 CLASS AA CONCRETE	5.3	5.4	5.5	5.6	5.8			
LB BAR REINF STEEL	1067	1070	1073	1076	1116			
PARAPET, BARREL END, AND TOEWALL QUANTITIES - 60° SKEW - TOTAL								
YD^3 CLASS AA CONCRETE	5.9	6.0	6.2	6.3	6.4			
LB BAR REINF STEEL	1132	1135	1139	1143	1183			
PARAPET, BARREL END, AND TOEWALL QUANTITIES - 45° SKEW - TOTAL								
YD^3 CLASS AA CONCRETE	7.3	7.4	7.6	7.8	7.9			
LB BAR REINF STEEL	1292	1298	1303	1308	1349			

DOUBLE 6'-0" X 4'-0" BOX CULVERT

BARREL REINFORCEMENT QUANTITIES AND DIMENSIONS

DESIGN	1	2	3	4	5	6	7	8
BAR A	415A @ 6"	413A @ 6"	414A @ 6"	417A @ 6"	419A @ 6"			
BAR B	435 @ 6"	528 @ 6"	527 @ 6"	611 @ 6"	610 @ 6"			
BAR C	471 @ 6"	472 @ 6"	563 @ 6"	564 @ 6"	565 @ 6"			
BAR E	414 @ 12"	415 @ 12"	416 @ 12"	417 @ 12"	418 @ 12"			
BAR F	506 @ 12"	415 @ 12"	416 @ 12"	417 @ 12"	418 @ 12"			
BAR G IN 2 SLABS	44 - 401	44 - 401	44 - 401	44 - 401	48 - 401			
BAR H IN 3 WALLS	18 - 402	18 - 402	18 - 402	18 - 402	18 - 402			
BAR J IN EXT. CORNER	0	0	0	3-409B @ 6¼"	3-413B @ 7"			
BAR J IN INT. CORNER	0	3-404B @ 5"	4-407B @ 5¾"	4-411B @ 6¼"	5-415B @ 7"			
T_1	8"	9"	10"	11"	12"			
T_2	9"	10"	11"	12"	13"			
T_3	8"	9"	10"	11"	12"			
X	14'-4"	14'-6"	14'-8"	14'-10"	15'-0"			
Y	5'-5"	5'-7"	5'-9"	5'-11"	6'-1"			
YD^3 CLASS AA CONCRETE/FT	1.116	1.239	1.364	1.491	1.620			
LB BAR REINF STEEL/FT	146.9	168.0	196.3	226.7	238.0			
PARAPET, BARREL END, AND TOEWALL QUANTITIES - 90° SKEW - TOTAL								
YD^3 CLASS AA CONCRETE	5.7	5.9	6.0	6.1	6.3			
LB BAR REINF STEEL	895	896	897	898	936			
PARAPET, BARREL END, AND TOEWALL QUANTITIES - 75° SKEW - TOTAL								
YD^3 CLASS AA CONCRETE	6.0	6.1	6.2	6.4	6.5			
LB BAR REINF STEEL	1108	1111	1114	1117	1158			
PARAPET, BARREL END, AND TOEWALL QUANTITIES - 60° SKEW - TOTAL								
YD^3 CLASS AA CONCRETE	6.7	6.8	7.0	7.1	7.3			
LB BAR REINF STEEL	1173	1176	1180	1184	1225			
PARAPET, BARREL END, AND TOEWALL QUANTITIES - 45° SKEW - TOTAL								
YD^3 CLASS AA CONCRETE	8.2	8.4	8.6	8.8	9.0			
LB BAR REINF STEEL	1335	1340	1345	1350	1393			

DATE | REVISION | BY

DEPARTMENT OF TRANSPORTATION
STATE OF GEORGIA

STANDARD

REINFORCED CONCRETE
DOUBLE BOX CULVERT
6'X3' AND 6'X4'

NO SCALE SEPTEMBER 2017

DES. YSK
DRW. FGS
TRA. ____
CHK. JWB

(SUBMITTED) _____ STATE DESIGN POLICY ENGINEER

(APPROVED) Margaret B Pirkle CHIEF ENGINEER

NUMBER 2402

SHEET 2D OF 3

STATE	PROJECT NUMBER	SHEET NO.	TOTAL SHEETS
GA.			

DOUBLE 6'-0" X 5'-0" BOX CULVERT

BARREL REINFORCEMENT QUANTITIES AND DIMENSIONS

DESIGN	1	2	3	4	5	6	7	8
BAR A	428A @ 6"	423A @ 6"	424A @ 6"	431A @ 6"	701A @ 12"			
BAR B	439 @ 6"	524 @ 6"	526 @ 6"	611 @ 6"	608 @ 6"			
BAR C	734 @ 12"	472 @ 6"	563 @ 6"	564 @ 6"	637 @ 6"			
BAR E	420 @ 12"	421 @ 12"	422 @ 12"	424 @ 12"	425 @ 12"			
BAR F	420 @ 12"	421 @ 12"	422 @ 12"	424 @ 12"	425 @ 12"			
BAR G IN 2 SLABS	44 - 401	44 - 401	44 - 401	44 - 401	44 - 401			
BAR H IN 3 WALLS	20 - 402	20 - 402	20 - 402	20 - 402	20 - 402			
BAR J IN EXT. CORNER	0	0	0	3-409B @ 6¼"	3-416B @ 7"			
BAR J IN INT. CORNER	0	3-404B @ 5"	4-407B @ 5¾"	4-411B @ 6¼"	4-415B @ 7"			
T_1	8"	9"	10"	11"	12"			
T_2	9"	10"	11"	12"	13"			
T_3	8"	9"	10"	11"	12"			
X	14'-4"	14'-6"	14'-8"	14'-10"	15'-0"			
Y	6'-5"	6'-7"	6'-9"	6'-11"	7'-1"			
YD^3 CLASS AA CONCRETE/FT	1.203	1.332	1.463	1.596	1.731			
LB BAR REINF STEEL/FT	174.6	176.9	205.7	236.1	285.9			
PARAPET, BARREL END, AND TOEWALL QUANTITIES - 90° SKEW - TOTAL								
YD^3 CLASS AA CONCRETE	5.9	6.0	6.2	6.3	6.5			
LB BAR REINF STEEL	919	920	921	922	923			
PARAPET, BARREL END, AND TOEWALL QUANTITIES - 75° SKEW - TOTAL								
YD^3 CLASS AA CONCRETE	6.1	6.3	6.4	6.6	6.7			
LB BAR REINF STEEL	1132	1135	1138	1141	1144			
PARAPET, BARREL END, AND TOEWALL QUANTITIES - 60° SKEW - TOTAL								
YD^3 CLASS AA CONCRETE	6.9	7.0	7.2	7.4	7.5			
LB BAR REINF STEEL	1198	1201	1205	1209	1212			
PARAPET, BARREL END, AND TOEWALL QUANTITIES - 45° SKEW - TOTAL								
YD^3 CLASS AA CONCRETE	8.5	8.7	8.9	9.1	9.3			
LB BAR REINF STEEL	1360	1366	1371	1376	1381			

DOUBLE 6'-0" X 6'-0" BOX CULVERT

BARREL REINFORCEMENT QUANTITIES AND DIMENSIONS

DESIGN	1	2	3	4	5	6	7	8
BAR A	447A @ 6"	438A @ 6"	443A @ 6"	704A @ 12"	525A @ 6"			
BAR B	446 @ 6"	520 @ 6"	518 @ 6"	606 @ 6"	609 @ 6"			
BAR C	734 @ 12"	472 @ 6"	563 @ 6"	564 @ 6"	637 @ 6"			
BAR E	428 @ 12"	429 @ 12"	431 @ 12"	525 @ 12"	527 @ 12"			
BAR F	428 @ 12"	429 @ 12"	431 @ 12"	432 @ 12"	434 @ 12"			
BAR G IN 2 SLABS	44 - 401	44 - 401	44 - 401	44 - 401	48 - 401			
BAR H IN 3 WALLS	26 - 402	26 - 402	26 - 402	26 - 402	26 - 402			
BAR J IN EXT. CORNER	0	0	2-406B @ 5¾"	3-412B @ 6¼"	3-414B @ 7"			
BAR J IN INT. CORNER	2-401B @ 4½"	3-404B @ 5"	4-407B @ 5¾"	4-411B @ 6¼"	4-415B @ 7"			
T_1	8"	9"	10"	11"	12"			
T_2	9"	10"	11"	12"	13"			
T_3	8"	9"	10"	11"	12"			
X	14'-4"	14'-6"	14'-8"	14'-10"	15'-0"			
Y	7'-5"	7'-7"	7'-9"	7'-11"	8'-1"			
YD^3 CLASS AA CONCRETE/FT	1.289	1.424	1.562	1.701	1.843			
LB BAR REINF STEEL/FT	199.9	188.4	226.0	274.3	311.2			
PARAPET, BARREL END, AND TOEWALL QUANTITIES - 90° SKEW - TOTAL								
YD^3 CLASS AA CONCRETE	6.1	6.2	6.4	6.5	6.7			
LB BAR REINF STEEL	969	970	971	972	1010			
PARAPET, BARREL END, AND TOEWALL QUANTITIES - 75° SKEW - TOTAL								
YD^3 CLASS AA CONCRETE	6.3	6.5	6.6	6.8	7.0			
LB BAR REINF STEEL	1184	1187	1190	1193	1234			
PARAPET, BARREL END, AND TOEWALL QUANTITIES - 60° SKEW - TOTAL								
YD^3 CLASS AA CONCRETE	7.1	7.2	7.4	7.6	7.8			
LB BAR REINF STEEL	1250	1254	1257	1261	1303			
PARAPET, BARREL END, AND TOEWALL QUANTITIES - 45° SKEW - TOTAL								
YD^3 CLASS AA CONCRETE	8.7	8.9	9.1	9.4	9.6			
LB BAR REINF STEEL	1415	1420	1425	1430	1473			

DOUBLE 6'-0" X 7'-0" BOX CULVERT

BARREL REINFORCEMENT QUANTITIES AND DIMENSIONS

DESIGN	1	2	3	4	5	6	7	8
BAR A	472A @ 6"	454A @ 6"	458A @ 6"	535A @ 6"	538A @ 6"			
BAR B	441 @ 6"	517 @ 6"	515 @ 6"	607 @ 6"	607 @ 6"			
BAR C	561 @ 6"	472 @ 6"	563 @ 6"	564 @ 6"	637 @ 6"			
BAR E	437 @ 12"	532 @ 12"	533 @ 12"	534 @ 12"	535 @ 12"			
BAR F	437 @ 12"	438 @ 12"	440 @ 12"	441 @ 12"	442 @ 12"			
BAR G IN 2 SLABS	44 - 401	44 - 401	44 - 401	44 - 401	48 - 401			
BAR H IN 3 WALLS	30 - 402	30 - 402	30 - 402	30 - 402	30 - 402			
BAR J IN EXT. CORNER	0	0	3-406B @ 5¾"	3-410B @ 6¼"	3-414B @ 7"			
BAR J IN INT. CORNER	2-401B @ 4½"	3-404B @ 5"	4-407B @ 5¾"	4-411B @ 6¼"	4-415B @ 7"			
T_1	8"	9"	10"	11"	12"			
T_2	9"	10"	11"	12"	13"			
T_3	8"	9"	10"	11"	12"			
X	14'-4"	14'-6"	14'-8"	14'-10"	15'-0"			
Y	8'-5"	8'-7"	8'-9"	8'-11"	9'-1"			
YD^3 CLASS AA CONCRETE/FT	1.376	1.517	1.660	1.806	1.954			
LB BAR REINF STEEL/FT	217.7	204.5	246.4	290.4	324.2			
PARAPET, BARREL END, AND TOEWALL QUANTITIES - 90° SKEW - TOTAL								
YD^3 CLASS AA CONCRETE	6.3	6.5	6.6	6.8	7.0			
LB BAR REINF STEEL	996	997	998	999	1038			
PARAPET, BARREL END, AND TOEWALL QUANTITIES - 75° SKEW - TOTAL								
YD^3 CLASS AA CONCRETE	6.6	6.7	6.9	7.1	7.3			
LB BAR REINF STEEL	1212	1215	1218	1221	1262			
PARAPET, BARREL END, AND TOEWALL QUANTITIES - 60° SKEW - TOTAL								
YD^3 CLASS AA CONCRETE	7.3	7.5	7.7	7.9	8.1			
LB BAR REINF STEEL	1279	1282	1286	1290	1331			
PARAPET, BARREL END, AND TOEWALL QUANTITIES - 45° SKEW - TOTAL								
YD^3 CLASS AA CONCRETE	9.0	9.3	9.5	9.7	10.0			
LB BAR REINF STEEL	1445	1450	1455	1461	1503			

DOUBLE 6'-0" X 8'-0" BOX CULVERT

BARREL REINFORCEMENT QUANTITIES AND DIMENSIONS

DESIGN	1	2	3	4	5	6	7	8
BAR A	466A @ 6"	467A @ 6"	552A @ 6"	554A @ 6"	558A @ 6"			
BAR B	441 @ 6"	511 @ 6"	510 @ 6"	605 @ 6"	604 @ 6"			
BAR C	561 @ 6"	472 @ 6"	563 @ 6"	564 @ 6"	637 @ 6"			
BAR E	537 @ 12"	538 @ 12"	447 @ 6"	448 @ 6"	712 @ 12"			
BAR F	444 @ 12"	445 @ 12"	447 @ 12"	448 @ 12"	449 @ 12"			
BAR G IN 2 SLABS	44 - 401	44 - 401	44 - 401	44 - 401	48 - 401			
BAR H IN 3 WALLS	32 - 402	32 - 402	32 - 402	32 - 402	32 - 402			
BAR J IN EXT. CORNER	0	0	3-407B @ 5¾"	4-410B @ 6¼"	3-414B @ 7"			
BAR J IN INT. CORNER	3-401B @ 4½"	3-404B @ 5"	4-407B @ 5¾"	4-411B @ 6¼"	4-415B @ 7"			
T_1	8"	9"	10"	11"	12"			
T_2	9"	10"	11"	12"	13"			
T_3	8"	9"	10"	11"	12"			
X	14'-4"	14'-6"	14'-8"	14'-10"	15'-0"			
Y	9'-5"	9'-7"	9'-9"	9'-11"	10'-1"			
YD^3 CLASS AA CONCRETE/FT	1.462	1.610	1.759	1.911	2.065			
LB BAR REINF STEEL/FT	230.9	213.3	293.1	312.7	355.6			
PARAPET, BARREL END, AND TOEWALL QUANTITIES - 90° SKEW - TOTAL								
YD^3 CLASS AA CONCRETE	6.6	6.7	6.9	7.1	7.3			
LB BAR REINF STEEL	1023	1024	1025	1025	1064			
PARAPET, BARREL END, AND TOEWALL QUANTITIES - 75° SKEW - TOTAL								
YD^3 CLASS AA CONCRETE	6.8	7.0	7.2	7.4	7.6			
LB BAR REINF STEEL	1239	1242	1245	1248	1289			
PARAPET, BARREL END, AND TOEWALL QUANTITIES - 60° SKEW - TOTAL								
YD^3 CLASS AA CONCRETE	7.6	7.8	8.0	8.2	8.5			
LB BAR REINF STEEL	1306	1310	1314	1317	1359			
PARAPET, BARREL END, AND TOEWALL QUANTITIES - 45° SKEW - TOTAL								
YD^3 CLASS AA CONCRETE	9.4	9.6	9.9	10.2	10.4			
LB BAR REINF STEEL	1473	1478	1483	1489	1532			

DEPARTMENT OF TRANSPORTATION
STATE OF GEORGIA

STANDARD

REINFORCED CONCRETE DOUBLE BOX CULVERT 6'X5', 6'X6', 6'X7' AND 6'X8'

NO SCALE — SEPTEMBER 2017

DATE | REVISION | BY

DES. YSK
DRW. FGS
TRA. ____
CHK. JWB

(SUBMITTED) _____ STATE DESIGN POLICY ENGINEER

(APPROVED) Margaret B Pirkle CHIEF ENGINEER

NUMBER 2402

SHEET 2E OF 3

STATE	PROJECT NUMBER	SHEET NO.	TOTAL SHEETS
GA.			

DOUBLE 7'-0" X 4'-0" BOX CULVERT

BARREL REINFORCEMENT QUANTITIES AND DIMENSIONS

DESIGN	1	2	3	4	5	6	7	8
BAR A	418A @ 6"	416A @ 6"	417A @ 6"	506A @ 6"	507A @ 6"			
BAR B	444 @ 6"	540 @ 6"	616 @ 6"	615 @ 6"	707 @ 6"			
BAR C	738 @ 12"	477 @ 6"	568 @ 6"	638 @ 6"	639 @ 6"			
BAR E	415 @ 12"	416 @ 12"	417 @ 12"	418 @ 12"	419 @ 12"			
BAR F	507 @ 12"	416 @ 12"	417 @ 12"	418 @ 12"	419 @ 12"			
BAR G IN 2 SLABS	48 - 401	48 - 401	48 - 401	48 - 401	48 - 401			
BAR H IN 3 WALLS	18 - 402	18 - 402	18 - 402	18 - 402	18 - 402			
BAR J IN EXT. CORNER	0	0	2-409B @ 6 1/4"	3-414B @ 7"	3-417B @ 7 1/2"			
BAR J IN INT. CORNER	0	3-407B @ 5 3/4"	4-411B @ 6 1/4"	5-415B @ 7"	5-419B @ 7 1/4"			
T_1	9"	10"	11"	12"	13"			
T_2	10"	11"	12"	13"	14"			
T_3	9"	10"	11"	12"	13"			
X	16'-6"	16'-8"	16'-10"	17'-0"	17'-2"			
Y	5'-7"	5'-9"	5'-11"	6'-1"	6'-3"			
YD^3 CLASS AA CONCRETE/FT	1.356	1.494	1.633	1.775	1.918			
LB BAR REINF STEEL/FT	184.0	186.2	244.9	307.3	331.2			
PARAPET, BARREL END, AND TOEWALL QUANTITIES - 90° SKEW - TOTAL								
YD^3 CLASS AA CONCRETE	6.6	6.7	6.8	7.0	7.1			
LB BAR REINF STEEL	977	978	978	979	979			
PARAPET, BARREL END, AND TOEWALL QUANTITIES - 75° SKEW - TOTAL								
YD^3 CLASS AA CONCRETE	6.8	7.0	7.1	7.3	7.4			
LB BAR REINF STEEL	1218	1221	1223	1226	1229			
PARAPET, BARREL END, AND TOEWALL QUANTITIES - 60° SKEW - TOTAL								
YD^3 CLASS AA CONCRETE	7.6	7.8	8.0	8.1	8.3			
LB BAR REINF STEEL	1292	1295	1298	1301	1305			
PARAPET, BARREL END, AND TOEWALL QUANTITIES - 45° SKEW - TOTAL								
YD^3 CLASS AA CONCRETE	9.4	9.6	9.8	10.0	10.2			
LB BAR REINF STEEL	1473	1477	1482	1487	1491			

DEPARTMENT OF TRANSPORTATION
STATE OF GEORGIA

STANDARD

REINFORCED CONCRETE
DOUBLE BOX CULVERT
7'X4'

NO SCALE — SEPTEMBER 2017

DATE | REVISION | BY

DES. YSK
DRW. FGS
TRA. ___
CHK. JWB

(SUBMITTED) STATE DESIGN POLICY ENGINEER

(APPROVED) Margaret B Pirkle CHIEF ENGINEER

NUMBER 2402

SHEET 2F OF 3

STATE	PROJECT NUMBER	SHEET NO.	TOTAL SHEETS
GA.			

DOUBLE 7'-0" X 5'-0" BOX CULVERT

BARREL REINFORCEMENT QUANTITIES AND DIMENSIONS

DESIGN	1	2	3	4	5	6	7	8
BAR A	430A @ 6"	427A @ 6"	432A @ 6"	512A @ 6"	515A @ 6"			
BAR B	448 @ 6"	539 @ 6"	615 @ 6"	708 @ 6"	707 @ 6"			
BAR C	738 @ 12"	567 @ 6"	568 @ 6"	638 @ 6"	639 @ 6"			
BAR E	421 @ 12"	422 @ 12"	424 @ 12"	425 @ 12"	426 @ 12"			
BAR F	514 @ 12"	422 @ 12"	424 @ 12"	425 @ 12"	426 @ 12"			
BAR G IN 2 SLABS	48 - 401	48 - 401	48 - 401	48 - 401	48 - 401			
BAR H IN 3 WALLS	20 - 402	20 - 402	20 - 402	20 - 402	20 - 402			
BAR J IN EXT. CORNER	0	0	2-409B @ 6¼"	3-414B @ 6¾"	3-417B @ 7½"			
BAR J IN INT. CORNER	0	3-407B @ 5¾"	4-411B @ 6¼"	5-416B @ 6¾"	5-419B @ 7"			
T_1	9"	10"	11"	12"	13"			
T_2	10"	11"	12"	13"	14"			
T_3	9"	10"	11"	12"	13"			
X	16'-6"	16'-8"	16'-10"	17'-0"	17'-2"			
Y	6'-7"	6'-9"	6'-11"	7'-1"	7'-3"			
YD³ CLASS AA CONCRETE/FT	1.449	1.593	1.738	1.886	2.035			
LB BAR REINF STEEL/FT	195.0	219.8	253.7	339.6	343.5			
PARAPET, BARREL END, AND TOEWALL QUANTITIES - 90° SKEW - TOTAL								
YD³ CLASS AA CONCRETE	6.8	6.9	7.1	7.2	7.4			
LB BAR REINF STEEL	1001	1002	1002	1003	1003			
PARAPET, BARREL END, AND TOEWALL QUANTITIES - 75° SKEW - TOTAL								
YD³ CLASS AA CONCRETE	7.0	7.2	7.3	7.5	7.7			
LB BAR REINF STEEL	1243	1245	1248	1251	1253			
PARAPET, BARREL END, AND TOEWALL QUANTITIES - 60° SKEW - TOTAL								
YD³ CLASS AA CONCRETE	7.8	8.0	8.2	8.4	8.5			
LB BAR REINF STEEL	1317	1320	1323	1326	1330			
PARAPET, BARREL END, AND TOEWALL QUANTITIES - 45° SKEW - TOTAL								
YD³ CLASS AA CONCRETE	9.7	9.9	10.1	10.3	10.5			
LB BAR REINF STEEL	1498	1503	1507	1512	1517			

DOUBLE 7'-0" X 6'-0" BOX CULVERT

BARREL REINFORCEMENT QUANTITIES AND DIMENSIONS

DESIGN	1	2	3	4	5	6	7	8
BAR A	446A @ 6"	442A @ 6"	445A @ 6"	525A @ 6"	528A @ 6"			
BAR B	443 @ 6"	537 @ 6"	614 @ 6"	706 @ 6"	705 @ 6"			
BAR C	738 @ 12"	567 @ 6"	568 @ 6"	638 @ 6"	639 @ 6"			
BAR E	429 @ 12"	431 @ 12"	432 @ 12"	434 @ 12"	436 @ 12"			
BAR F	521 @ 12"	431 @ 12"	432 @ 12"	434 @ 12"	436 @ 12"			
BAR G IN 2 SLABS	48 - 401	48 - 401	48 - 401	48 - 401	48 - 401			
BAR H IN 3 WALLS	26 - 402	26 - 402	26 - 402	26 - 402	26 - 402			
BAR J IN EXT. CORNER	0	0	3-409B @ 6¼"	3-414B @ 6¾"	3-417B @ 7½"			
BAR J IN INT. CORNER	0	3-407B @ 5¾"	4-411B @ 6¼"	5-416B @ 6¾"	5-419B @ 6¾"			
T_1	9"	10"	11"	12"	13"			
T_2	10"	11"	12"	13"	14"			
T_3	9"	10"	11"	12"	13"			
X	16'-6"	16'-8"	16'-10"	17'-0"	17'-2"			
Y	7'-7"	7'-9"	7'-11"	8'-1"	8'-3"			
YD³ CLASS AA CONCRETE/FT	1.542	1.691	1.843	1.997	2.153			
LB BAR REINF STEEL/FT	207.7	231.4	269.5	353.3	357.2			
PARAPET, BARREL END, AND TOEWALL QUANTITIES - 90° SKEW - TOTAL								
YD³ CLASS AA CONCRETE	6.9	7.1	7.3	7.4	7.6			
LB BAR REINF STEEL	1051	1052	1052	1052	1053			
PARAPET, BARREL END, AND TOEWALL QUANTITIES - 75° SKEW - TOTAL								
YD³ CLASS AA CONCRETE	7.2	7.4	7.6	7.7	7.9			
LB BAR REINF STEEL	1294	1297	1300	1302	1305			
PARAPET, BARREL END, AND TOEWALL QUANTITIES - 60° SKEW - TOTAL								
YD³ CLASS AA CONCRETE	8.1	8.2	8.4	8.6	8.8			
LB BAR REINF STEEL	1369	1372	1376	1379	1382			
PARAPET, BARREL END, AND TOEWALL QUANTITIES - 45° SKEW - TOTAL								
YD³ CLASS AA CONCRETE	9.9	10.2	10.4	10.6	10.9			
LB BAR REINF STEEL	1553	1557	1562	1567	1571			

DOUBLE 7'-0" X 7'-0" BOX CULVERT

BARREL REINFORCEMENT QUANTITIES AND DIMENSIONS

DESIGN	1	2	3	4	5	6	7	8
BAR A	463A @ 6"	456A @ 6"	535A @ 6"	537A @ 6"	542A @ 6"			
BAR B	440 @ 6"	535 @ 6"	613 @ 6"	704 @ 6"	701 @ 6"			
BAR C	566 @ 6"	567 @ 6"	568 @ 6"	638 @ 6"	639 @ 6"			
BAR E	438 @ 12"	440 @ 12"	534 @ 12"	535 @ 12"	536 @ 12"			
BAR F	532 @ 12"	440 @ 12"	441 @ 12"	442 @ 12"	443 @ 12"			
BAR G IN 2 SLABS	48 - 401	48 - 401	48 - 401	48 - 401	48 - 401			
BAR H IN 3 WALLS	30 - 402	30 - 402	30 - 402	30 - 402	30 - 402			
BAR J IN EXT. CORNER	0	0	3-410B @ 6¼"	3-414B @ 6¾"	4-417B @ 7½"			
BAR J IN INT. CORNER	0	3-407B @ 5¾"	4-411B @ 6¼"	5-416B @ 6¾"	5-419B @ 6¾"			
T_1	9"	10"	11"	12"	13"			
T_2	10"	11"	12"	13"	14"			
T_3	9"	10"	11"	12"	13"			
X	16'-6"	16'-8"	16'-10"	17'-0"	17'-2"			
Y	8'-7"	8'-9"	8'-11"	9'-1"	9'-3"			
YD³ CLASS AA CONCRETE/FT	1.634	1.790	1.948	2.108	2.270			
LB BAR REINF STEEL/FT	222.8	241.6	313.4	372.1	378.8			
PARAPET, BARREL END, AND TOEWALL QUANTITIES - 90° SKEW - TOTAL								
YD³ CLASS AA CONCRETE	7.2	7.3	7.5	7.7	7.9			
LB BAR REINF STEEL	1078	1079	1079	1080	1080			
PARAPET, BARREL END, AND TOEWALL QUANTITIES - 75° SKEW - TOTAL								
YD³ CLASS AA CONCRETE	7.5	7.6	7.8	8.0	8.2			
LB BAR REINF STEEL	1323	1325	1328	1330	1333			
PARAPET, BARREL END, AND TOEWALL QUANTITIES - 60° SKEW - TOTAL								
YD³ CLASS AA CONCRETE	8.3	8.5	8.7	8.9	9.2			
LB BAR REINF STEEL	1398	1401	1404	1408	1411			
PARAPET, BARREL END, AND TOEWALL QUANTITIES - 45° SKEW - TOTAL								
YD³ CLASS AA CONCRETE	10.3	10.5	10.8	11.0	11.3			
LB BAR REINF STEEL	1583	1588	1592	1597	1602			

DOUBLE 7'-0" X 8'-0" BOX CULVERT

BARREL REINFORCEMENT QUANTITIES AND DIMENSIONS

DESIGN	1	2	3	4	5	6	7	8
BAR A	477A @ 6"	469A @ 6"	551A @ 6"	555A @ 6"	604A @ 6"			
BAR B	436 @ 6"	529 @ 6"	612 @ 6"	702 @ 6"	701 @ 6"			
BAR C	566 @ 6"	567 @ 6"	568 @ 6"	638 @ 6"	639 @ 6"			
BAR E	538 @ 12"	539 @ 12"	540 @ 12"	449 @ 6"	450 @ 6"			
BAR F	445 @ 12"	447 @ 12"	448 @ 12"	449 @ 12"	450 @ 12"			
BAR G IN 2 SLABS	48 - 401	48 - 401	48 - 401	48 - 401	48 - 401			
BAR H IN 3 WALLS	32 - 402	32 - 402	32 - 402	32 - 402	32 - 402			
BAR J IN EXT. CORNER	0	0	3-410B @ 6¼"	4-414B @ 6¾"	4-418B @ 7½"			
BAR J IN INT. CORNER	0	3-407B @ 5¾"	4-411B @ 6¼"	5-416B @ 6¾"	5-419B @ 6¾"			
T_1	9"	10"	11"	12"	13"			
T_2	10"	11"	12"	13"	14"			
T_3	9"	10"	11"	12"	13"			
X	16'-6"	16'-8"	16'-10"	17'-0"	17'-2"			
Y	9'-7"	9'-9"	9'-11"	10'-1"	10'-3"			
YD³ CLASS AA CONCRETE/FT	1.727	1.889	2.053	2.219	2.387			
LB BAR REINF STEEL/FT	239.5	256.7	325.9	393.3	438.8			
PARAPET, BARREL END, AND TOEWALL QUANTITIES - 90° SKEW - TOTAL								
YD³ CLASS AA CONCRETE	7.5	7.6	7.8	8.0	8.2			
LB BAR REINF STEEL	1105	1106	1106	1106	1107			
PARAPET, BARREL END, AND TOEWALL QUANTITIES - 75° SKEW - TOTAL								
YD³ CLASS AA CONCRETE	7.8	8.0	8.2	8.4	8.6			
LB BAR REINF STEEL	1350	1352	1355	1358	1360			
PARAPET, BARREL END, AND TOEWALL QUANTITIES - 60° SKEW - TOTAL								
YD³ CLASS AA CONCRETE	8.7	8.9	9.1	9.3	9.5			
LB BAR REINF STEEL	1426	1429	1432	1435	1439			
PARAPET, BARREL END, AND TOEWALL QUANTITIES - 45° SKEW - TOTAL								
YD³ CLASS AA CONCRETE	10.7	10.9	11.2	11.5	11.7			
LB BAR REINF STEEL	1611	1616	1621	1625	1630			

DEPARTMENT OF TRANSPORTATION
STATE OF GEORGIA

STANDARD

REINFORCED CONCRETE DOUBLE BOX CULVERT 7'X5', 7'X6', 7'X7' AND 7'X8'

NO SCALE — SEPTEMBER 2017

DATE | REVISION | BY

DES. YSK
DRW. FGS
TRA. ___
CHK. JWB

(SUBMITTED) STATE DESIGN POLICY ENGINEER

(APPROVED) Margaret B Pirkle CHIEF ENGINEER

NUMBER 2402

SHEET 26 OF 31

STATE	PROJECT NUMBER	SHEET NO.	TOTAL SHEETS
GA.			

DOUBLE 8'-0" X 4'-0" BOX CULVERT

BARREL REINFORCEMENT QUANTITIES AND DIMENSIONS

DESIGN	1	2	3	4	5	6	7	8
BAR A	509A @ 12"	421A @ 6"	426A @ 6"	511A @ 6"	514A @ 6"			
BAR B	457 @ 6"	547 @ 6"	622 @ 6"	717 @ 6"	715 @ 6"			
BAR C	478 @ 6"	479 @ 6"	569 @ 6"	640 @ 6"	641 @ 6"			
BAR E	418 @ 12"	419 @ 12"	420 @ 12"	421 @ 12"	422 @ 12"			
BAR F	418 @ 12"	419 @ 12"	420 @ 12"	421 @ 12"	422 @ 12"			
BAR G IN 2 SLABS	56 - 401	56 - 401	56 - 401	56 - 401	56 - 401			
BAR H IN 3 WALLS	18 - 402	18 - 402	18 - 402	18 - 402	18 - 402			
BAR J IN EXT. CORNER	0	0	0	0	3-424B @ 10"			
BAR J IN INT. CORNER	0	0	3-420B @ 8½"	4-423B @ 9"	4-426B @ 9½"			
T_1	12"	13"	14"	15"	16"			
T_2	13"	14"	15"	16"	17"			
T_3	12"	13"	14"	15"	16"			
X	19'-0"	19'-2"	19'-4"	19'-6"	19'-8"			
Y	6'-1"	6'-3"	6'-5"	6'-7"	6'-9"			
YD³ CLASS AA CONCRETE/FT	1.929	2.085	2.243	2.403	2.565			
LB BAR REINF STEEL/FT	172.4	196.0	262.5	349.8	369.4			
PARAPET, BARREL END, AND TOEWALL QUANTITIES - 90° SKEW - TOTAL								
YD³ CLASS AA CONCRETE	7.7	7.9	8.0	8.2	8.3			
LB BAR REINF STEEL	1099	1099	1099	1099	1099			
PARAPET, BARREL END, AND TOEWALL QUANTITIES - 75° SKEW - TOTAL								
YD³ CLASS AA CONCRETE	8.0	8.2	8.3	8.5	8.6			
LB BAR REINF STEEL	1373	1375	1377	1379	1381			
PARAPET, BARREL END, AND TOEWALL QUANTITIES - 60° SKEW - TOTAL								
YD³ CLASS AA CONCRETE	8.9	9.1	9.3	9.5	9.6			
LB BAR REINF STEEL	1456	1459	1462	1465	1467			
PARAPET, BARREL END, AND TOEWALL QUANTITIES - 45° SKEW - TOTAL								
YD³ CLASS AA CONCRETE	11.0	11.2	11.4	11.7	11.9			
LB BAR REINF STEEL	1658	1663	1667	1671	1675			

DOUBLE 8'-0" X 5'-0" BOX CULVERT

BARREL REINFORCEMENT QUANTITIES AND DIMENSIONS

DESIGN	1	2	3	4	5	6	7	8
BAR A	517A @ 12"	436A @ 6"	440A @ 6"	705A @ 12"	526A @ 6"			
BAR B	456 @ 6"	546 @ 6"	621 @ 6"	710 @ 6"	715 @ 6"			
BAR C	478 @ 6"	479 @ 6"	569 @ 6"	640 @ 6"	641 @ 6"			
BAR E	425 @ 12"	426 @ 12"	428 @ 12"	429 @ 12"	431 @ 12"			
BAR F	425 @ 12"	426 @ 12"	428 @ 12"	429 @ 12"	431 @ 12"			
BAR G IN 2 SLABS	56 - 401	56 - 401	56 - 401	56 - 401	56 - 401			
BAR H IN 3 WALLS	20 - 402	20 - 402	20 - 402	20 - 402	20 - 402			
BAR J IN EXT. CORNER	0	0	0	0	3-424B @ 10"			
BAR J IN INT. CORNER	0	0	3-420B @ 8½"	4-423B @ 9"	4-426B @ 9¼"			
T_1	12"	13"	14"	15"	16"			
T_2	13"	14"	15"	16"	17"			
T_3	12"	13"	14"	15"	16"			
X	19'-0"	19'-2"	19'-4"	19'-6"	19'-8"			
Y	7'-1"	7'-3"	7'-5"	7'-7"	7'-9"			
YD³ CLASS AA CONCRETE/FT	2.040	2.202	2.366	2.532	2.701			
LB BAR REINF STEEL/FT	179.7	205.1	271.3	355.3	381.8			
PARAPET, BARREL END, AND TOEWALL QUANTITIES - 90° SKEW - TOTAL								
YD³ CLASS AA CONCRETE	7.9	8.1	8.2	8.4	8.6			
LB BAR REINF STEEL	1123	1123	1123	1123	1123			
PARAPET, BARREL END, AND TOEWALL QUANTITIES - 75° SKEW - TOTAL								
YD³ CLASS AA CONCRETE	8.2	8.4	8.6	8.7	8.9			
LB BAR REINF STEEL	1398	1400	1402	1404	1406			
PARAPET, BARREL END, AND TOEWALL QUANTITIES - 60° SKEW - TOTAL								
YD³ CLASS AA CONCRETE	9.2	9.4	9.6	9.8	10.0			
LB BAR REINF STEEL	1481	1484	1487	1490	1492			
PARAPET, BARREL END, AND TOEWALL QUANTITIES - 45° SKEW - TOTAL								
YD³ CLASS AA CONCRETE	11.3	11.6	11.8	12.0	12.3			
LB BAR REINF STEEL	1684	1688	1693	1697	1701			

DOUBLE 8'-0" X 6'-0" BOX CULVERT

BARREL REINFORCEMENT QUANTITIES AND DIMENSIONS

DESIGN	1	2	3	4	5	6	7	8
BAR A	529A @ 12"	451A @ 6"	453A @ 6"	707A @ 12"	533A @ 6"			
BAR B	455 @ 6"	545 @ 6"	620 @ 6"	708 @ 6"	715 @ 6"			
BAR C	478 @ 6"	479 @ 6"	569 @ 6"	640 @ 6"	641 @ 6"			
BAR E	434 @ 12"	436 @ 12"	437 @ 12"	438 @ 12"	440 @ 12"			
BAR F	434 @ 12"	436 @ 12"	437 @ 12"	438 @ 12"	440 @ 12"			
BAR G IN 2 SLABS	56 - 401	56 - 401	56 - 401	56 - 401	56 - 401			
BAR H IN 3 WALLS	26 - 402	26 - 402	26 - 402	26 - 402	26 - 402			
BAR J IN EXT. CORNER	0	0	0	0	3-424B @ 10"			
BAR J IN INT. CORNER	0	0	4-420B @ 8½"	4-423B @ 9"	5-426B @ 9"			
T_1	12"	13"	14"	15"	16"			
T_2	13"	14"	15"	16"	17"			
T_3	12"	13"	14"	15"	16"			
X	19'-0"	19'-2"	19'-4"	19'-6"	19'-8"			
Y	8'-1"	8'-3"	8'-5"	8'-7"	8'-9"			
YD³ CLASS AA CONCRETE/FT	2.151	2.319	2.490	2.662	2.836			
LB BAR REINF STEEL/FT	190.8	216.8	288.3	369.5	402.8			
PARAPET, BARREL END, AND TOEWALL QUANTITIES - 90° SKEW - TOTAL								
YD³ CLASS AA CONCRETE	8.2	8.3	8.5	8.7	8.8			
LB BAR REINF STEEL	1173	1173	1173	1173	1173			
PARAPET, BARREL END, AND TOEWALL QUANTITIES - 75° SKEW - TOTAL								
YD³ CLASS AA CONCRETE	8.5	8.7	8.8	9.0	9.2			
LB BAR REINF STEEL	1449	1451	1453	1455	1458			
PARAPET, BARREL END, AND TOEWALL QUANTITIES - 60° SKEW - TOTAL								
YD³ CLASS AA CONCRETE	9.5	9.7	9.9	10.1	10.3			
LB BAR REINF STEEL	1534	1536	1539	1542	1545			
PARAPET, BARREL END, AND TOEWALL QUANTITIES - 45° SKEW - TOTAL								
YD³ CLASS AA CONCRETE	11.6	11.9	12.1	12.4	12.6			
LB BAR REINF STEEL	1739	1743	1747	1751	1756			

DATE | REVISION | BY

DEPARTMENT OF TRANSPORTATION
STATE OF GEORGIA

STANDARD

REINFORCED CONCRETE
DOUBLE BOX CULVERT
8'X4', 8'X5' AND 8'X6'

NO SCALE — SEPTEMBER 2017

DES. YSK
DRW. FGS
TRA. ____
CHK. JWB

(SUBMITTED) STATE DESIGN POLICY ENGINEER

(APPROVED) Margaret B Pirkle
CHIEF ENGINEER

NUMBER 2402

SHEET 2H OF 3

STATE	PROJECT NUMBER	SHEET NO.	TOTAL SHEETS
GA.			

DOUBLE 8'-0" X 7'-0" BOX CULVERT

BARREL REINFORCEMENT QUANTITIES AND DIMENSIONS

DESIGN	1	2	3	4	5	6	7	8
BAR A	544A @ 12"	462A @ 6"	464A @ 6"	545A @ 6"	549A @ 6"			
BAR B	452 @ 6"	544 @ 6"	619 @ 6"	714 @ 6"	713 @ 6"			
BAR C	739 @ 12"	479 @ 6"	569 @ 6"	640 @ 6"	641 @ 6"			
BAR E	442 @ 12"	443 @ 12"	444 @ 12"	445 @ 12"	447 @ 12"			
BAR F	442 @ 12"	443 @ 12"	444 @ 12"	445 @ 12"	447 @ 12"			
BAR G IN 2 SLABS	56 - 401	56 - 401	56 - 401	56 - 401	56 - 401			
BAR H IN 3 WALLS	30 - 402	30 - 402	30 - 402	30 - 402	30 - 402			
BAR J IN EXT. CORNER	0	0	0	0	3-424B @ 10"			
BAR J IN INT. CORNER	0	2-417B @ 8"	4-420B @ 8½"	4-423B @ 9"	5-426B @ 8¾"			
T_1	12"	13"	14"	15"	16"			
T_2	13"	14"	15"	16"	17"			
T_3	12"	13"	14"	15"	16"			
X	19'-0"	19'-2"	19'-4"	19'-6"	19'-8"			
Y	9'-1"	9'-3"	9'-5"	9'-7"	9'-9"			
YD^3 CLASS AA CONCRETE/FT	2.262	2.437	2.613	2.792	2.972			
LB BAR REINF STEEL/FT	226.8	237.6	297.9	388.2	415.1			
PARAPET, BARREL END, AND TOEWALL QUANTITIES - 90° SKEW - TOTAL								
YD^3 CLASS AA CONCRETE	8.4	8.6	8.8	9.0	9.2			
LB BAR REINF STEEL	1200	1200	1200	1200	1200			
PARAPET, BARREL END, AND TOEWALL QUANTITIES - 75° SKEW - TOTAL								
YD^3 CLASS AA CONCRETE	8.8	9.0	9.2	9.3	9.5			
LB BAR REINF STEEL	1477	1480	1482	1484	1486			
PARAPET, BARREL END, AND TOEWALL QUANTITIES - 60° SKEW - TOTAL								
YD^3 CLASS AA CONCRETE	9.8	10.0	10.2	10.4	10.7			
LB BAR REINF STEEL	1563	1566	1568	1571	1574			
PARAPET, BARREL END, AND TOEWALL QUANTITIES - 45° SKEW - TOTAL								
YD^3 CLASS AA CONCRETE	12.0	12.3	12.6	12.8	13.1			
LB BAR REINF STEEL	1769	1773	1778	1782	1786			

DOUBLE 8'-0" X 8'-0" BOX CULVERT

BARREL REINFORCEMENT QUANTITIES AND DIMENSIONS

DESIGN	1	2	3	4	5	6	7	8
BAR A	571A @ 12"	473A @ 6"	710A @ 12"	560A @ 6"	563A @ 6"			
BAR B	448 @ 6"	541 @ 6"	617 @ 6"	711 @ 6"	709 @ 6"			
BAR C	739 @ 12"	740 @ 12"	569 @ 6"	640 @ 6"	641 @ 6"			
BAR E	449 @ 12"	450 @ 12"	542 @ 12"	543 @ 12"	453 @ 6"			
BAR F	449 @ 12"	450 @ 12"	451 @ 12"	452 @ 12"	453 @ 12"			
BAR G IN 2 SLABS	56 - 401	56 - 401	56 - 401	56 - 401	56 - 401			
BAR H IN 3 WALLS	32 - 402	32 - 402	32 - 402	32 - 402	32 - 402			
BAR J IN EXT. CORNER	0	0	0	3-421B @ 9"	3-424B @ 10"			
BAR J IN INT. CORNER	0	0	4-420B @ 8½"	4-423B @ 9"	5-426B @ 8¾"			
T_1	12"	13"	14"	15"	16"			
T_2	13"	14"	15"	16"	17"			
T_3	12"	13"	14"	15"	16"			
X	19'-0"	19'-2"	19'-4"	19'-6"	19'-8"			
Y	10'-1"	10'-3"	10'-5"	10'-7"	10'-9"			
YD^3 CLASS AA CONCRETE/FT	2.373	2.554	2.737	2.921	3.108			
LB BAR REINF STEEL/FT	243.3	262.3	344.8	423.4	439.3			
PARAPET, BARREL END, AND TOEWALL QUANTITIES - 90° SKEW - TOTAL								
YD^3 CLASS AA CONCRETE	8.8	9.0	9.2	9.4	9.6			
LB BAR REINF STEEL	1228	1228	1227	1227	1227			
PARAPET, BARREL END, AND TOEWALL QUANTITIES - 75° SKEW - TOTAL								
YD^3 CLASS AA CONCRETE	9.1	9.3	9.5	9.7	10.0			
LB BAR REINF STEEL	1505	1507	1509	1512	1514			
PARAPET, BARREL END, AND TOEWALL QUANTITIES - 60° SKEW - TOTAL								
YD^3 CLASS AA CONCRETE	10.2	10.4	10.6	10.9	11.1			
LB BAR REINF STEEL	1591	1594	1596	1599	1602			
PARAPET, BARREL END, AND TOEWALL QUANTITIES - 45° SKEW - TOTAL								
YD^3 CLASS AA CONCRETE	12.5	12.8	13.1	13.4	13.7			
LB BAR REINF STEEL	1798	1802	1806	1811	1815			

DOUBLE 8'-0" X 9'-0" BOX CULVERT

BARREL REINFORCEMENT QUANTITIES AND DIMENSIONS

DESIGN	1	2	3	4	5	6	7	8
BAR A	579A @ 12"	476A @ 6"	713A @ 12"	568A @ 6"	605A @ 6"			
BAR B	443 @ 6"	539 @ 6"	614 @ 6"	706 @ 6"	707 @ 6"			
BAR C	739 @ 12"	740 @ 12"	569 @ 6"	640 @ 6"	641 @ 6"			
BAR E	455 @ 12"	546 @ 12"	547 @ 12"	458 @ 6"	459 @ 6"			
BAR F	455 @ 12"	456 @ 12"	457 @ 12"	458 @ 12"	458 @ 12"			
BAR G IN 2 SLABS	56 - 401	56 - 401	56 - 401	56 - 401	56 - 401			
BAR H IN 3 WALLS	38 - 402	38 - 402	38 - 402	38 - 402	38 - 402			
BAR J IN EXT. CORNER	0	0	0	3-421B @ 9"	3-425B @ 10"			
BAR J IN INT. CORNER	0	0	4-420 @ 8½"	4-423B @ 9"	5-426B @ 8¾"			
T_1	12"	13"	14"	15"	16"			
T_2	13"	14"	15"	16"	17"			
T_3	12"	13"	14"	15"	16"			
X	19'-0"	19'-2"	19'-4"	19'-6"	19'-8"			
Y	11'-1"	11'-3"	11'-5"	11'-7"	11'-9"			
YD^3 CLASS AA CONCRETE/FT	2.485	2.671	2.860	3.051	3.244			
LB BAR REINF STEEL/FT	254.2	281.7	359.2	443.0	502.1			
PARAPET, BARREL END, AND TOEWALL QUANTITIES - 90° SKEW - TOTAL								
YD^3 CLASS AA CONCRETE	9.1	9.3	9.5	9.7	9.9			
LB BAR REINF STEEL	1279	1279	1279	1279	1279			
PARAPET, BARREL END, AND TOEWALL QUANTITIES - 75° SKEW - TOTAL								
YD^3 CLASS AA CONCRETE	9.4	9.6	9.8	10.1	10.3			
LB BAR REINF STEEL	1558	1560	1563	1565	1567			
PARAPET, BARREL END, AND TOEWALL QUANTITIES - 60° SKEW - TOTAL								
YD^3 CLASS AA CONCRETE	10.5	10.7	11.0	11.2	11.5			
LB BAR REINF STEEL	1645	1648	1650	1653	1656			
PARAPET, BARREL END, AND TOEWALL QUANTITIES - 45° SKEW - TOTAL								
YD^3 CLASS AA CONCRETE	12.9	13.2	13.5	13.8	14.1			
LB BAR REINF STEEL	1854	1858	1862	1867	1871			

DOUBLE 8'-0" X 10'-0" BOX CULVERT

BARREL REINFORCEMENT QUANTITIES AND DIMENSIONS

DESIGN	1	2	3	4	5	6	7	8
BAR A	482A @ 6"	481A @ 6"	572A @ 6"	607A @ 6"	608A @ 6"			
BAR B	440 @ 6"	536 @ 6"	614 @ 6"	703 @ 6"	705 @ 6"			
BAR C	739 @ 12"	740 @ 12"	569 @ 6"	640 @ 6"	641 @ 6"			
BAR E	551 @ 12"	552 @ 12"	463 @ 6"	628 @ 12"	726 @ 12"			
BAR F	461 @ 12"	462 @ 12"	463 @ 12"	464 @ 12"	465 @ 12"			
BAR G IN 2 SLABS	56 - 401	56 - 401	56 - 401	56 - 401	56 - 401			
BAR H IN 3 WALLS	42 - 402	42 - 402	42 - 402	42 - 402	42 - 402			
BAR J IN EXT. CORNER	0	0	0	3-422B @ 9"	3-425B @ 10"			
BAR J IN INT. CORNER	0	2-417B @ 8"	4-420B @ 8½"	4-423B @ 9"	5-426B @ 8¾"			
T_1	12"	13"	14"	15"	16"			
T_2	13"	14"	15"	16"	17"			
T_3	12"	13"	14"	15"	16"			
X	19'-0"	19'-2"	19'-4"	19'-6"	19'-8"			
Y	12'-1"	12'-3"	12'-5"	12'-7"	12'-9"			
YD^3 CLASS AA CONCRETE/FT	2.596	2.789	2.984	3.181	3.380			
LB BAR REINF STEEL/FT	277.0	303.0	382.8	512.2	540.5			
PARAPET, BARREL END, AND TOEWALL QUANTITIES - 90° SKEW - TOTAL								
YD^3 CLASS AA CONCRETE	9.3	9.5	9.7	9.9	10.2			
LB BAR REINF STEEL	1305	1305	1305	1305	1305			
PARAPET, BARREL END, AND TOEWALL QUANTITIES - 75° SKEW - TOTAL								
YD^3 CLASS AA CONCRETE	9.6	9.9	10.1	10.3	10.6			
LB BAR REINF STEEL	1585	1587	1589	1592	1594			
PARAPET, BARREL END, AND TOEWALL QUANTITIES - 60° SKEW - TOTAL								
YD^3 CLASS AA CONCRETE	10.8	11.0	11.3	11.5	11.8			
LB BAR REINF STEEL	1672	1675	1678	1681	1684			
PARAPET, BARREL END, AND TOEWALL QUANTITIES - 45° SKEW - TOTAL								
YD^3 CLASS AA CONCRETE	13.2	13.6	13.9	14.2	14.5			
LB BAR REINF STEEL	1883	1887	1891	1896	1900			

DEPARTMENT OF TRANSPORTATION
STATE OF GEORGIA

STANDARD

REINFORCED CONCRETE DOUBLE BOX CULVERT 8'X7', 8'X8', 8'X9' AND 8'X10'

NO SCALE — SEPTEMBER 2017

DATE | REVISION | BY

DES. YSK
DRW. FGS
TRA. ____
CHK. JWB

(SUBMITTED) STATE DESIGN POLICY ENGINEER

(APPROVED) Margaret B Pirkle CHIEF ENGINEER

NUMBER 2402

SHEET 21 OF 3

STATE	PROJECT NUMBER	SHEET NO.	TOTAL SHEETS
GA.			

DOUBLE 9'-0" X 4'-0" BOX CULVERT

BARREL REINFORCEMENT QUANTITIES AND DIMENSIONS

DESIGN	1	2	3	4	5	6	7	8
BAR A	513A @ 12"	433A @ 6"	702A @ 12"	516A @ 6"	520A @ 6"			
BAR B	466 @ 6"	556 @ 6"	625 @ 6"	725 @ 6"	721 @ 6"			
BAR C	480 @ 6"	481 @ 6"	570 @ 6"	642 @ 6"	643 @ 6"			
BAR E	420 @ 12"	421 @ 12"	422 @ 12"	424 @ 12"	425 @ 12"			
BAR F	420 @ 12"	421 @ 12"	422 @ 12"	424 @ 12"	425 @ 12"			
BAR G IN 2 SLABS	64 - 401	64 - 401	64 - 401	64 - 401	64 - 401			
BAR H IN 3 WALLS	18 - 402	18 - 402	18 - 402	18 - 402	18 - 402			
BAR J IN EXT. CORNER	0	0	0	0	3-429B @ 11½"			
BAR J IN INT. CORNER	0	0	3-425B @ 10¼"	4-428B @ 10¾"	5-431B @ 10"			
T_1	14"	15"	16"	17"	18"			
T_2	15"	16"	17"	18"	19"			
T_3	14"	15"	16"	17"	18"			
X	21'-4"	21'-6"	21'-8"	21'-10"	22'-0"			
Y	6'-5"	6'-7"	6'-9"	6'-11"	7'-1"			
YD^3 CLASS AA CONCRETE/FT	2.422	2.594	2.769	2.945	3.123			
LB BAR REINF STEEL/FT	190.9	217.8	311.1	389.6	416.4			
PARAPET, BARREL END, AND TOEWALL QUANTITIES - 90° SKEW - TOTAL								
YD^3 CLASS AA CONCRETE	8.7	8.9	9.0	9.2	9.4			
LB BAR REINF STEEL	1219	1218	1218	1217	1217			
PARAPET, BARREL END, AND TOEWALL QUANTITIES - 75° SKEW - TOTAL								
YD^3 CLASS AA CONCRETE	9.1	9.2	9.4	9.6	9.7			
LB BAR REINF STEEL	1523	1525	1527	1528	1530			
PARAPET, BARREL END, AND TOEWALL QUANTITIES - 60° SKEW - TOTAL								
YD^3 CLASS AA CONCRETE	10.1	10.3	10.5	10.7	10.9			
LB BAR REINF STEEL	1616	1618	1620	1623	1625			
PARAPET, BARREL END, AND TOEWALL QUANTITIES - 45° SKEW - TOTAL								
YD^3 CLASS AA CONCRETE	12.5	12.7	12.9	13.1	13.4			
LB BAR REINF STEEL	1838	1842	1846	1849	1853			

DOUBLE 9'-0" X 5'-0" BOX CULVERT

BARREL REINFORCEMENT QUANTITIES AND DIMENSIONS

DESIGN	1	2	3	4	5	6	7	8
BAR A	523A @ 12"	444A @ 6"	448A @ 6"	527A @ 6"	530A @ 6"			
BAR B	466 @ 6"	555 @ 6"	630 @ 6"	725 @ 6"	805 @ 6"			
BAR C	480 @ 6"	742 @ 12"	570 @ 6"	642 @ 6"	643 @ 6"			
BAR E	428 @ 12"	429 @ 12"	431 @ 12"	432 @ 12"	434 @ 12"			
BAR F	428 @ 12"	429 @ 12"	431 @ 12"	432 @ 12"	434 @ 12"			
BAR G IN 2 SLABS	64 - 401	64 - 401	64 - 401	64 - 401	64 - 401			
BAR H IN 3 WALLS	20 - 402	20 - 402	20 - 402	20 - 402	20 - 402			
BAR J IN EXT. CORNER	0	0	0	0	3-429B @ 11¼"			
BAR J IN INT. CORNER	0	0	3-425B @ 10¼"	4-428B @ 10¾"	5-432B @ 9¼"			
T_1	14"	15"	16"	17"	18"			
T_2	15"	16"	17"	18"	19"			
T_3	14"	15"	16"	17"	18"			
X	21'-4"	21'-6"	21'-8"	21'-10"	22'-0"			
Y	7'-5"	7'-7"	7'-9"	7'-11"	8'-1"			
YD^3 CLASS AA CONCRETE/FT	2.545	2.724	2.904	3.087	3.272			
LB BAR REINF STEEL/FT	198.7	256.9	301.8	402.0	458.0			
PARAPET, BARREL END, AND TOEWALL QUANTITIES - 90° SKEW - TOTAL								
YD^3 CLASS AA CONCRETE	9.0	9.1	9.3	9.5	9.7			
LB BAR REINF STEEL	1243	1242	1242	1241	1241			
PARAPET, BARREL END, AND TOEWALL QUANTITIES - 75° SKEW - TOTAL								
YD^3 CLASS AA CONCRETE	9.3	9.5	9.7	9.9	10.0			
LB BAR REINF STEEL	1548	1549	1551	1553	1555			
PARAPET, BARREL END, AND TOEWALL QUANTITIES - 60° SKEW - TOTAL								
YD^3 CLASS AA CONCRETE	10.4	10.6	10.8	11.0	11.2			
LB BAR REINF STEEL	1641	1643	1645	1648	1650			
PARAPET, BARREL END, AND TOEWALL QUANTITIES - 45° SKEW - TOTAL								
YD^3 CLASS AA CONCRETE	12.8	13.1	13.3	13.5	13.8			
LB BAR REINF STEEL	1864	1867	1871	1875	1879			

DOUBLE 9'-0" X 6'-0" BOX CULVERT

BARREL REINFORCEMENT QUANTITIES AND DIMENSIONS

DESIGN	1	2	3	4	5	6	7	8
BAR A	531A @ 12"	457A @ 6"	459A @ 6"	539A @ 6"	541A @ 6"			
BAR B	464 @ 6"	554 @ 6"	629 @ 6"	723 @ 6"	805 @ 6"			
BAR C	480 @ 6"	742 @ 12"	570 @ 6"	642 @ 6"	643 @ 6"			
BAR E	437 @ 12"	438 @ 12"	440 @ 12"	441 @ 12"	442 @ 12"			
BAR F	437 @ 12"	438 @ 12"	440 @ 12"	441 @ 12"	442 @ 12"			
BAR G IN 2 SLABS	64 - 401	64 - 401	64 - 401	64 - 401	64 - 401			
BAR H IN 3 WALLS	26 - 402	26 - 402	26 - 402	26 - 402	26 - 402			
BAR J IN EXT. CORNER	0	0	0	0	3-429B @ 11¼"			
BAR J IN INT. CORNER	0	0	3-425B @ 10¼"	4-426B @ 10¾"	5-432B @ 9"			
T_1	14"	15"	16"	17"	18"			
T_2	15"	16"	17"	18"	19"			
T_3	14"	15"	16"	17"	18"			
X	21'-4"	21'-6"	21'-8"	21'-10"	22'-0"			
Y	8'-5"	8'-7"	8'-9"	8'-11"	9'-1"			
YD^3 CLASS AA CONCRETE/FT	2.669	2.853	3.040	3.229	3.420			
LB BAR REINF STEEL/FT	208.7	268.7	313.3	415.7	473.0			
PARAPET, BARREL END, AND TOEWALL QUANTITIES - 90° SKEW - TOTAL								
YD^3 CLASS AA CONCRETE	9.2	9.4	9.6	9.8	10.0			
LB BAR REINF STEEL	1293	1292	1292	1291	1291			
PARAPET, BARREL END, AND TOEWALL QUANTITIES - 75° SKEW - TOTAL								
YD^3 CLASS AA CONCRETE	9.6	9.8	10.0	10.2	10.3			
LB BAR REINF STEEL	1599	1601	1603	1604	1606			
PARAPET, BARREL END, AND TOEWALL QUANTITIES - 60° SKEW - TOTAL								
YD^3 CLASS AA CONCRETE	10.7	10.9	11.1	11.3	11.5			
LB BAR REINF STEEL	1693	1695	1698	1700	1703			
PARAPET, BARREL END, AND TOEWALL QUANTITIES - 45° SKEW - TOTAL								
YD^3 CLASS AA CONCRETE	13.2	13.4	13.7	13.9	14.2			
LB BAR REINF STEEL	1918	1922	1926	1929	1933			

DEPARTMENT OF TRANSPORTATION
STATE OF GEORGIA

STANDARD

REINFORCED CONCRETE
DOUBLE BOX CULVERT
9'X4', 9'X5' AND 9'X6'

NO SCALE — SEPTEMBER 2017

DATE | REVISION | BY

DES. YSK
DRW. FGS
TRA. ____
CHK. JWB

(SUBMITTED) STATE DESIGN POLICY ENGINEER
(APPROVED) Margaret B Pirkle CHIEF ENGINEER

NUMBER 2402
SHEET 2J OF 3

STATE	PROJECT NUMBER	SHEET NO.	TOTAL SHEETS
GA.			

DOUBLE 9'-0" X 7'-0" BOX CULVERT

BARREL REINFORCEMENT QUANTITIES AND DIMENSIONS

DESIGN	1	2	3	4	5	6	7	8
BAR A	550A @ 12"	465A @ 6"	470A @ 6"	553A @ 6"	557A @ 6"			
BAR B	462 @ 6"	553 @ 6"	627 @ 6"	722 @ 6"	805 @ 6"			
BAR C	480 @ 6"	742 @ 12"	570 @ 6"	642 @ 6"	643 @ 6"			
BAR E	444 @ 12"	445 @ 12"	447 @ 12"	448 @ 12"	449 @ 12"			
BAR F	444 @ 12"	445 @ 12"	447 @ 12"	448 @ 12"	449 @ 12"			
BAR G IN 2 SLABS	64 - 401	64 - 401	64 - 401	64 - 401	64 - 401			
BAR H IN 3 WALLS	30 - 402	30 - 402	30 - 402	30 - 402	30 - 402			
BAR J IN EXT. CORNER	0	0	0	0	3-429B @ 11¼"			
BAR J IN INT. CORNER	0	0	3-425B @ 10¼"	4-428B @ 10¾"	5-432B @ 8¾"			
T_1	14"	15"	16"	17"	18"			
T_2	15"	16"	17"	18"	19"			
T_3	14"	15"	16"	17"	18"			
X	21'-4"	21'-6"	21'-8"	21'-10"	22'-0"			
Y	9'-5"	9'-7"	9'-9"	9'-11"	10'-1"			
YD³ CLASS AA CONCRETE/FT	2.792	2.983	3.176	3.371	3.568			
LB BAR REINF STEEL/FT	218.7	279.1	322.3	428.7	486.7			
PARAPET, BARREL END, AND TOEWALL QUANTITIES - 90° SKEW - TOTAL								
YD³ CLASS AA CONCRETE	9.5	9.7	9.9	10.1	10.3			
LB BAR REINF STEEL	1320	1320	1319	1319	1318			
PARAPET, BARREL END, AND TOEWALL QUANTITIES - 75° SKEW - TOTAL								
YD³ CLASS AA CONCRETE	9.9	10.1	10.3	10.5	10.7			
LB BAR REINF STEEL	1628	1630	1631	1633	1635			
PARAPET, BARREL END, AND TOEWALL QUANTITIES - 60° SKEW - TOTAL								
YD³ CLASS AA CONCRETE	11.1	11.3	11.5	11.7	12.0			
LB BAR REINF STEEL	1722	1725	1727	1730	1732			
PARAPET, BARREL END, AND TOEWALL QUANTITIES - 45° SKEW - TOTAL								
YD³ CLASS AA CONCRETE	13.6	13.9	14.2	14.4	14.7			
LB BAR REINF STEEL	1949	1953	1956	1960	1964			

DOUBLE 9'-0" X 8'-0" BOX CULVERT

BARREL REINFORCEMENT QUANTITIES AND DIMENSIONS

DESIGN	1	2	3	4	5	6	7	8
BAR A	564A @ 12"	474A @ 6"	711A @ 12"	562A @ 6"	566A @ 6"			
BAR B	720 @ 12"	626 @ 6"	621 @ 6"	720 @ 6"	803 @ 6"			
BAR C	741 @ 12"	742 @ 12"	570 @ 6"	642 @ 6"	643 @ 6"			
BAR E	451 @ 12"	452 @ 12"	453 @ 12"	454 @ 12"	545 @ 12"			
BAR F	451 @ 12"	452 @ 12"	453 @ 12"	454 @ 12"	455 @ 12"			
BAR G IN 2 SLABS	64 - 401	64 - 401	64 - 401	64 - 401	64 - 401			
BAR H IN 3 WALLS	32 - 402	32 - 402	32 - 402	32 - 402	32 - 402			
BAR J IN EXT. CORNER	0	0	0	0	3-429B @ 11¼"			
BAR J IN INT. CORNER	0	0	4-425B @ 10¼"	4-428B @ 10¾"	5-432B @ 8½"			
T_1	14"	15"	16"	17"	18"			
T_2	15"	16"	17"	18"	19"			
T_3	14"	15"	16"	17"	18"			
X	21'-4"	21'-6"	21'-8"	21'-10"	22'-0"			
Y	10'-5"	10'-7"	10'-9"	10'-11"	11'-1"			
YD³ CLASS AA CONCRETE/FT	2.916	3.113	3.312	3.513	3.716			
LB BAR REINF STEEL/FT	273.8	309.4	368.2	439.7	504.7			
PARAPET, BARREL END, AND TOEWALL QUANTITIES - 90° SKEW - TOTAL								
YD³ CLASS AA CONCRETE	9.9	10.1	10.3	10.5	10.8			
LB BAR REINF STEEL	1348	1347	1347	1346	1346			
PARAPET, BARREL END, AND TOEWALL QUANTITIES - 75° SKEW - TOTAL								
YD³ CLASS AA CONCRETE	10.3	10.5	10.7	11.0	11.2			
LB BAR REINF STEEL	1656	1658	1660	1661	1663			
PARAPET, BARREL END, AND TOEWALL QUANTITIES - 60° SKEW - TOTAL								
YD³ CLASS AA CONCRETE	11.5	11.7	12.0	12.2	12.5			
LB BAR REINF STEEL	1751	1753	1756	1758	1760			
PARAPET, BARREL END, AND TOEWALL QUANTITIES - 45° SKEW - TOTAL								
YD³ CLASS AA CONCRETE	14.1	14.4	14.7	15.0	15.3			
LB BAR REINF STEEL	1978	1982	1986	1989	1993			

DOUBLE 9'-0" X 9'-0" BOX CULVERT

BARREL REINFORCEMENT QUANTITIES AND DIMENSIONS

DESIGN	1	2	3	4	5	6	7	8
BAR A	581A @ 12"	478A @ 6"	714A @ 12"	569A @ 6"	606A @ 6"			
BAR B	718 @ 12"	623 @ 6"	618 @ 6"	718 @ 6"	802 @ 6"			
BAR C	741 @ 12"	742 @ 12"	570 @ 6"	642 @ 6"	643 @ 6"			
BAR E	457 @ 12"	548 @ 12"	549 @ 12"	550 @ 12"	461 @ 6"			
BAR F	457 @ 12"	458 @ 12"	459 @ 12"	460 @ 12"	461 @ 12"			
BAR G IN 2 SLABS	64 - 401	64 - 401	64 - 401	64 - 401	64 - 401			
BAR H IN 3 WALLS	38 - 402	38 - 402	38 - 402	38 - 402	38 - 402			
BAR J IN EXT. CORNER	0	0	0	3-427B @ 10¾"	3-430B @ 11¼"			
BAR J IN INT. CORNER	0	0	4-425B @ 10¼"	4-428B @ 10¾"	5-432B @ 8½"			
T_1	14"	15"	16"	17"	18"			
T_2	15"	16"	17"	18"	19"			
T_3	14"	15"	16"	17"	18"			
X	21'-4"	21'-6"	21'-8"	21'-10"	22'-0"			
Y	11'-5"	11'-7"	11'-9"	11'-11"	12'-1"			
YD³ CLASS AA CONCRETE/FT	3.039	3.242	3.448	3.655	3.864			
LB BAR REINF STEEL/FT	293.4	328.1	390.8	479.9	574.3			
PARAPET, BARREL END, AND TOEWALL QUANTITIES - 90° SKEW - TOTAL								
YD³ CLASS AA CONCRETE	10.2	10.5	10.7	10.9	11.1			
LB BAR REINF STEEL	1399	1399	1398	1398	1397			
PARAPET, BARREL END, AND TOEWALL QUANTITIES - 75° SKEW - TOTAL								
YD³ CLASS AA CONCRETE	10.6	10.9	11.1	11.3	11.6			
LB BAR REINF STEEL	1709	1711	1713	1714	1716			
PARAPET, BARREL END, AND TOEWALL QUANTITIES - 60° SKEW - TOTAL								
YD³ CLASS AA CONCRETE	11.9	12.1	12.4	12.6	12.9			
LB BAR REINF STEEL	1805	1808	1810	1812	1815			
PARAPET, BARREL END, AND TOEWALL QUANTITIES - 45° SKEW - TOTAL								
YD³ CLASS AA CONCRETE	14.6	14.9	15.2	15.5	15.8			
LB BAR REINF STEEL	2034	2038	2042	2046	2049			

DOUBLE 9'-0" X 10'-0" BOX CULVERT

BARREL REINFORCEMENT QUANTITIES AND DIMENSIONS

DESIGN	1	2	3	4	5	6	7	8
BAR A	583A @ 12"	483A @ 6"	574A @ 6"	577A @ 6"	609A @ 6"			
BAR B	716 @ 12"	621 @ 6"	621 @ 6"	716 @ 6"	801 @ 6"			
BAR C	741 @ 12"	742 @ 12"	570 @ 6"	642 @ 6"	643 @ 6"			
BAR E	553 @ 12"	554 @ 12"	465 @ 6"	466 @ 6"	467 @ 6"			
BAR F	463 @ 12"	464 @ 12"	465 @ 12"	466 @ 12"	467 @ 12"			
BAR G IN 2 SLABS	64 - 401	64 - 401	64 - 401	64 - 401	64 - 401			
BAR H IN 3 WALLS	42 - 402	42 - 402	42 - 402	42 - 402	42 - 402			
BAR J IN EXT. CORNER	0	0	0	3-427B @ 10¾"	3-430B @ 11¼"			
BAR J IN INT. CORNER	0	0	4-425B @ 10¼"	4-428B @ 10¾"	5-432B @ 8½"			
T_1	14"	15"	16"	17"	18"			
T_2	15"	16"	17"	18"	19"			
T_3	14"	15"	16"	17"	18"			
X	21'-4"	21'-6"	21'-8"	21'-10"	22'-0"			
Y	12'-5"	12'-7"	12'-9"	12'-11"	13'-1"			
YD³ CLASS AA CONCRETE/FT	3.163	3.372	3.583	3.797	4.012			
LB BAR REINF STEEL/FT	309.1	337.9	415.5	499.0	589.9			
PARAPET, BARREL END, AND TOEWALL QUANTITIES - 90° SKEW - TOTAL								
YD³ CLASS AA CONCRETE	10.5	10.7	10.9	11.2	11.4			
LB BAR REINF STEEL	1425	1425	1424	1424	1423			
PARAPET, BARREL END, AND TOEWALL QUANTITIES - 75° SKEW - TOTAL								
YD³ CLASS AA CONCRETE	10.9	11.1	11.4	11.6	11.9			
LB BAR REINF STEEL	1736	1738	1740	1741	1743			
PARAPET, BARREL END, AND TOEWALL QUANTITIES - 60° SKEW - TOTAL								
YD³ CLASS AA CONCRETE	12.1	12.4	12.7	13.0	13.2			
LB BAR REINF STEEL	1833	1835	1837	1840	1842			
PARAPET, BARREL END, AND TOEWALL QUANTITIES - 45° SKEW - TOTAL								
YD³ CLASS AA CONCRETE	14.9	15.3	15.6	15.9	16.3			
LB BAR REINF STEEL	2063	2067	2071	2075	2078			

DEPARTMENT OF TRANSPORTATION
STATE OF GEORGIA

STANDARD

REINFORCED CONCRETE DOUBLE BOX CULVERT 9'X7', 9'X8', 9'X9' AND 9'X10'

NO SCALE — SEPTEMBER 2017

DATE | REVISION | BY

DES. YSK
DRW. FGS
TRA. ___
CHK. JWB

(SUBMITTED) STATE DESIGN POLICY ENGINEER

(APPROVED) Margaret B Pirkle CHIEF ENGINEER

NUMBER 2402

SHEET 2K OF 3

STATE	PROJECT NUMBER	SHEET NO.	TOTAL SHEETS
GA.			

DOUBLE 10'-0" X 4'-0" BOX CULVERT

BARREL REINFORCEMENT QUANTITIES AND DIMENSIONS

DESIGN	1	2	3	4	5	6	7	8
BAR A	435A @ 6"	434A @ 6"	703A @ 12"	524A @ 6"	601A @ 6"			
BAR B	563 @ 6"	636 @ 6"	632 @ 6"	733 @ 6"	731 @ 6"			
BAR C	482 @ 6"	571 @ 6"	572 @ 6"	645 @ 6"	646 @ 6"			
BAR E	420 @ 12"	422 @ 12"	425 @ 12"	428 @ 12"	431 @ 12"			
BAR F	513 @ 12"	422 @ 12"	425 @ 12"	428 @ 12"	431 @ 12"			
BAR G IN 2 SLABS	64 - 401	68 - 401	68 - 401	80 - 401	80 - 401			
BAR H IN 3 WALLS	18 - 402	18 - 402	18 - 402	18 - 402	18 - 402			
BAR J IN EXT. CORNER	0	0	0	0	0			
BAR J IN INT. CORNER	0	0	3-430B @ 11¾"	4-433B @ 13"	4-435B @ 14½"			
T_1	14"	16"	18"	20"	22"			
T_2	15"	17"	19"	21"	23"			
T_3	14"	16"	18"	20"	22"			
X	23'-4"	23'-8"	24'-0"	24'-4"	24'-8"			
Y	6'-5"	6'-9"	7'-1"	7'-5"	7'-9"			
YD^3 CLASS AA CONCRETE/FT	2.601	2.972	3.352	3.740	4.136			
LB BAR REINF STEEL/FT	236.6	296.5	339.5	437.2	475.7			
PARAPET, BARREL END, AND TOEWALL QUANTITIES - 90° SKEW - TOTAL								
YD^3 CLASS AA CONCRETE	9.5	9.8	10.1	10.5	10.8			
LB BAR REINF STEEL	1261	1296	1294	1414	1412			
PARAPET, BARREL END, AND TOEWALL QUANTITIES - 75° SKEW - TOTAL								
YD^3 CLASS AA CONCRETE	9.8	10.2	10.5	10.9	11.2			
LB BAR REINF STEEL	1592	1631	1633	1758	1761			
PARAPET, BARREL END, AND TOEWALL QUANTITIES - 60° SKEW - TOTAL								
YD^3 CLASS AA CONCRETE	11.0	11.3	11.7	12.1	12.5			
LB BAR REINF STEEL	1692	1733	1737	1863	1866			
PARAPET, BARREL END, AND TOEWALL QUANTITIES - 45° SKEW - TOTAL								
YD^3 CLASS AA CONCRETE	13.5	14.0	14.4	14.9	15.4			
LB BAR REINF STEEL	1931	1975	1982	2111	2117			

BY	DATE	REVISION

DEPARTMENT OF TRANSPORTATION
STATE OF GEORGIA

STANDARD

REINFORCED CONCRETE
DOUBLE BOX CULVERT
10'X4'

NO SCALE — SEPTEMBER 2017

DES. YSK
DRW. FGS
TRA. ___
CHK. JWB

(SUBMITTED) STATE DESIGN POLICY ENGINEER

(APPROVED) Margaret B Pirkle
CHIEF ENGINEER

NUMBER 2402

SHEET 2L OF 3

STATE	PROJECT NUMBER	SHEET NO.	TOTAL SHEETS
GA.			

DOUBLE 10'-0" X 5'-0" BOX CULVERT

BARREL REINFORCEMENT QUANTITIES AND DIMENSIONS

DESIGN	1	2	3	4	5	6	7	8
BAR A	449A @ 6"	450A @ 6"	706A @ 12"	534A @ 6"	540A @ 6"			
BAR B	562 @ 6"	635 @ 6"	730 @ 6"	732 @ 6"	811 @ 6"			
BAR C	743 @ 12"	571 @ 6"	572 @ 6"	645 @ 6"	646 @ 6"			
BAR E	428 @ 12"	431 @ 12"	434 @ 12"	437 @ 12"	440 @ 12"			
BAR F	519 @ 12"	431 @ 12"	434 @ 12"	437 @ 12"	440 @ 12"			
BAR G IN 2 SLABS	64 - 401	68 - 401	68 - 401	80 - 401	80 - 401			
BAR H IN 3 WALLS	20 - 402	20 - 402	20 - 402	24 - 402	24 - 402			
BAR J IN EXT. CORNER	0	0	0	0	0			
BAR J IN INT. CORNER	0	0	3-431B @ 11½"	4-433B @ 13"	4-436B @ 13¼"			
T_1	14"	16"	18"	20"	22"			
T_2	15"	17"	19"	21"	23"			
T_3	14"	16"	18"	20"	22"			
X	23'-4"	23'-8"	24'-0"	24'-4"	24'-8"			
Y	7'-5"	7'-9"	8'-1"	8'-5"	8'-9"			
YD³ CLASS AA CONCRETE/FT	2.724	3.108	3.500	3.900	4.309			
LB BAR REINF STEEL/FT	278.2	305.3	380.6	451.5	491.8			
PARAPET, BARREL END, AND TOEWALL QUANTITIES - 90° SKEW - TOTAL								
YD³ CLASS AA CONCRETE	9.7	10.1	10.4	10.8	11.1			
LB BAR REINF STEEL	1285	1320	1318	1464	1462			
PARAPET, BARREL END, AND TOEWALL QUANTITIES - 75° SKEW - TOTAL								
YD³ CLASS AA CONCRETE	10.1	10.5	10.8	11.2	11.6			
LB BAR REINF STEEL	1616	1656	1658	1810	1812			
PARAPET, BARREL END, AND TOEWALL QUANTITIES - 60° SKEW - TOTAL								
YD³ CLASS AA CONCRETE	11.3	11.7	12.1	12.5	12.9			
LB BAR REINF STEEL	1717	1758	1761	1915	1919			
PARAPET, BARREL END, AND TOEWALL QUANTITIES - 45° SKEW - TOTAL								
YD³ CLASS AA CONCRETE	13.9	14.3	14.8	15.4	15.9			
LB BAR REINF STEEL	1957	2001	2007	2165	2172			

DOUBLE 10'-0" X 7'-0" BOX CULVERT

BARREL REINFORCEMENT QUANTITIES AND DIMENSIONS

DESIGN	1	2	3	4	5	6	7	8
BAR A	543A @ 12"	471A @ 6"	709A @ 12"	561A @ 6"	565A @ 6"			
BAR B	560 @ 6"	634 @ 6"	729 @ 6"	730 @ 6"	809 @ 6"			
BAR C	743 @ 12"	571 @ 6"	572 @ 6"	645 @ 6"	646 @ 6"			
BAR E	444 @ 12"	447 @ 12"	449 @ 12"	451 @ 12"	453 @ 12"			
BAR F	444 @ 12"	447 @ 12"	449 @ 12"	451 @ 12"	453 @ 12"			
BAR G IN 2 SLABS	64 - 401	68 - 401	68 - 401	80 - 401	80 - 401			
BAR H IN 3 WALLS	30 - 402	30 - 402	30 - 402	34 - 402	34 - 402			
BAR J IN EXT. CORNER	0	0	0	0	0			
BAR J IN INT. CORNER	0	3-425B @ 10¼"	3-431B @ 11½"	4-433B @ 13"	4-436B @ 12½"			
T_1	14"	16"	18"	20"	22"			
T_2	15"	17"	19"	21"	23"			
T_3	14"	16"	18"	20"	22"			
X	23'-4"	23'-8"	24'-0"	24'-4"	24'-8"			
Y	9'-5"	9'-9"	10'-1"	10'-5"	10'-9"			
YD³ CLASS AA CONCRETE/FT	2.971	3.380	3.796	4.221	4.654			
LB BAR REINF STEEL/FT	281.3	344.8	408.3	478.9	518.3			
PARAPET, BARREL END, AND TOEWALL QUANTITIES - 90° SKEW - TOTAL								
YD³ CLASS AA CONCRETE	10.3	10.7	11.1	11.5	11.9			
LB BAR REINF STEEL	1362	1397	1395	1542	1540			
PARAPET, BARREL END, AND TOEWALL QUANTITIES - 75° SKEW - TOTAL								
YD³ CLASS AA CONCRETE	10.7	11.1	11.5	11.9	12.4			
LB BAR REINF STEEL	1696	1736	1738	1890	1893			
PARAPET, BARREL END, AND TOEWALL QUANTITIES - 60° SKEW - TOTAL								
YD³ CLASS AA CONCRETE	11.9	12.4	12.8	13.3	13.8			
LB BAR REINF STEEL	1799	1840	1843	1997	2001			
PARAPET, BARREL END, AND TOEWALL QUANTITIES - 45° SKEW - TOTAL								
YD³ CLASS AA CONCRETE	14.7	15.2	15.8	16.4	17.0			
LB BAR REINF STEEL	2042	2086	2093	2251	2257			

DOUBLE 10'-0" X 6'-0" BOX CULVERT

BARREL REINFORCEMENT QUANTITIES AND DIMENSIONS

DESIGN	1	2	3	4	5	6	7	8
BAR A	460A @ 6"	461A @ 6"	708A @ 12"	546A @ 6"	556A @ 6"			
BAR B	562 @ 6"	635 @ 6"	730 @ 6"	732 @ 6"	810 @ 6"			
BAR C	743 @ 12"	571 @ 6"	572 @ 6"	645 @ 6"	646 @ 6"			
BAR E	437 @ 12"	440 @ 12"	442 @ 12"	444 @ 12"	447 @ 12"			
BAR F	437 @ 12"	440 @ 12"	442 @ 12"	444 @ 12"	447 @ 12"			
BAR G IN 2 SLABS	64 - 401	68 - 401	68 - 401	80 - 401	80 - 401			
BAR H IN 3 WALLS	26 - 402	26 - 402	26 - 402	34 - 402	34 - 402			
BAR J IN EXT. CORNER	0	0	0	0	0			
BAR J IN INT. CORNER	0	0	3-431B @ 11½"	4-433B @ 13"	4-436B @ 12¾"			
T_1	14"	16"	18"	20"	22"			
T_2	15"	17"	19"	21"	23"			
T_3	14"	16"	18"	20"	22"			
X	23'-4"	23'-8"	24'-0"	24'-4"	24'-8"			
Y	8'-5"	8'-9"	9'-1"	9'-5"	9'-9"			
YD³ CLASS AA CONCRETE/FT	2.848	3.244	3.648	4.061	4.481			
LB BAR REINF STEEL/FT	284.9	317.3	395.5	469.2	508.4			
PARAPET, BARREL END, AND TOEWALL QUANTITIES - 90° SKEW - TOTAL								
YD³ CLASS AA CONCRETE	10.0	10.3	10.7	11.1	11.5			
LB BAR REINF STEEL	1335	1370	1368	1540	1538			
PARAPET, BARREL END, AND TOEWALL QUANTITIES - 75° SKEW - TOTAL								
YD³ CLASS AA CONCRETE	10.4	10.7	11.1	11.5	11.9			
LB BAR REINF STEEL	1668	1707	1710	1888	1891			
PARAPET, BARREL END, AND TOEWALL QUANTITIES - 60° SKEW - TOTAL								
YD³ CLASS AA CONCRETE	11.6	12.0	12.4	12.9	13.3			
LB BAR REINF STEEL	1769	1810	1814	1995	1999			
PARAPET, BARREL END, AND TOEWALL QUANTITIES - 45° SKEW - TOTAL								
YD³ CLASS AA CONCRETE	14.2	14.7	15.3	15.8	16.4			
LB BAR REINF STEEL	2012	2055	2062	2249	2255			

DOUBLE 10'-0" X 8'-0" BOX CULVERT

BARREL REINFORCEMENT QUANTITIES AND DIMENSIONS

DESIGN	1	2	3	4	5	6	7	8
BAR A	559A @ 12"	475A @ 6"	712A @ 12"	567A @ 6"	570A @ 6"			
BAR B	559 @ 6"	633 @ 6"	727 @ 6"	729 @ 6"	808 @ 6"			
BAR C	743 @ 12"	571 @ 6"	644 @ 6"	645 @ 6"	646 @ 6"			
BAR E	451 @ 12"	453 @ 12"	455 @ 12"	457 @ 12"	459 @ 12"			
BAR F	451 @ 12"	453 @ 12"	455 @ 12"	457 @ 12"	459 @ 12"			
BAR G IN 2 SLABS	64 - 401	68 - 401	68 - 401	80 - 401	80 - 401			
BAR H IN 3 WALLS	32 - 402	32 - 402	32 - 402	44 - 402	44 - 402			
BAR J IN EXT. CORNER	0	0	0	0	0			
BAR J IN INT. CORNER	0	3-425B @ 10¼"	3-431B @ 11½"	4-433B @ 13"	4-436B @ 12¼"			
T_1	14"	16"	18"	20"	22"			
T_2	15"	17"	19"	21"	23"			
T_3	14"	16"	18"	20"	22"			
X	23'-4"	23'-8"	24'-0"	24'-4"	24'-8"			
Y	10'-5"	10'-9"	11'-1"	11'-5"	11'-9"			
YD³ CLASS AA CONCRETE/FT	3.095	3.515	3.944	4.382	4.827			
LB BAR REINF STEEL/FT	288.8	353.6	461.9	495.9	533.8			
PARAPET, BARREL END, AND TOEWALL QUANTITIES - 90° SKEW - TOTAL								
YD³ CLASS AA CONCRETE	10.7	11.1	11.5	12.0	12.4			
LB BAR REINF STEEL	1390	1425	1423	1622	1620			
PARAPET, BARREL END, AND TOEWALL QUANTITIES - 75° SKEW - TOTAL								
YD³ CLASS AA CONCRETE	11.1	11.5	12.0	12.4	12.9			
LB BAR REINF STEEL	1725	1764	1767	1973	1976			
PARAPET, BARREL END, AND TOEWALL QUANTITIES - 60° SKEW - TOTAL								
YD³ CLASS AA CONCRETE	12.4	12.9	13.4	13.9	14.4			
LB BAR REINF STEEL	1827	1868	1872	2082	2086			
PARAPET, BARREL END, AND TOEWALL QUANTITIES - 45° SKEW - TOTAL								
YD³ CLASS AA CONCRETE	15.2	15.8	16.4	17.0	17.7			
LB BAR REINF STEEL	2071	2115	2122	2339	2345			

DEPARTMENT OF TRANSPORTATION
STATE OF GEORGIA

STANDARD

REINFORCED CONCRETE DOUBLE BOX CULVERT 10'X5', 10'X6', 10'X7' AND 10'X8'

NO SCALE — SEPTEMBER 2017

DATE | REVISION | BY

DES. YSK
DRW. FGS
TRA. ___
CHK. JWB

(SUBMITTED) STATE DESIGN POLICY ENGINEER
(APPROVED) Margaret B Pirkle CHIEF ENGINEER

NUMBER 2402

SHEET 2M OF 3

STATE	PROJECT NUMBER	SHEET NO.	TOTAL SHEETS
GA.			

DOUBLE 10'-0" X 9'-0" BOX CULVERT

BARREL REINFORCEMENT QUANTITIES AND DIMENSIONS

DESIGN	1	2	3	4	5	6	7	8
BAR A	480A @ 6"	479A @ 6"	715A @ 12"	573A @ 6"	576A @ 6"			
BAR B	558 @ 6"	632 @ 6"	723 @ 6"	728 @ 6"	807 @ 6"			
BAR C	743 @ 12"	571 @ 6"	644 @ 6"	645 @ 6"	646 @ 6"			
BAR E	457 @ 12"	459 @ 12"	461 @ 12"	553 @ 12"	555 @ 12"			
BAR F	457 @ 12"	459 @ 12"	461 @ 12"	463 @ 12"	465 @ 12"			
BAR G IN 2 SLABS	64 - 401	68 - 401	68 - 401	80 - 401	80 - 401			
BAR H IN 3 WALLS	38 - 402	38 - 402	38 - 402	50 - 402	50 - 402			
BAR J IN EXT. CORNER	0	0	0	0	0			
BAR J IN INT. CORNER	0	3-425B @ 10¼"	3-428B @ 11½"	4-433B @ 13"	4-436B @ 12"			
T_1	14"	16"	18"	20"	22"			
T_2	15"	17"	19"	21"	23"			
T_3	14"	16"	18"	20"	22"			
X	23'-4"	23'-8"	24'-0"	24'-4"	24'-8"			
Y	11'-5"	11'-9"	12'-1"	12'-5"	12'-9"			
YD^3 CLASS AA CONCRETE/FT	3.218	3.651	4.093	4.542	5.000			
LB BAR REINF STEEL/FT	317.5	364.0	474.7	518.6	555.9			
PARAPET, BARREL END, AND TOEWALL QUANTITIES - 90° SKEW - TOTAL								
YD^3 CLASS AA CONCRETE	11.0	11.4	11.9	12.4	12.8			
LB BAR REINF STEEL	1441	1477	1475	1674	1672			
PARAPET, BARREL END, AND TOEWALL QUANTITIES - 75° SKEW - TOTAL								
YD^3 CLASS AA CONCRETE	11.4	11.9	12.4	12.8	13.3			
LB BAR REINF STEEL	1778	1818	1820	2027	2029			
PARAPET, BARREL END, AND TOEWALL QUANTITIES - 60° SKEW - TOTAL								
YD^3 CLASS AA CONCRETE	12.7	13.3	13.8	14.3	14.9			
LB BAR REINF STEEL	1881	1923	1926	2136	2140			
PARAPET, BARREL END, AND TOEWALL QUANTITIES - 45° SKEW - TOTAL								
YD^3 CLASS AA CONCRETE	15.7	16.3	16.9	17.6	18.3			
LB BAR REINF STEEL	2128	2172	2178	2395	2402			

DOUBLE 10'-0" X 10'-0" BOX CULVERT

BARREL REINFORCEMENT QUANTITIES AND DIMENSIONS

DESIGN	1	2	3	4	5	6	7	8
BAR A	575A @ 12"	484A @ 6"	578A @ 6"	580A @ 6"	610A @ 6"			
BAR B	555 @ 6"	631 @ 6"	727 @ 6"	724 @ 6"	806 @ 6"			
BAR C	743 @ 12"	571 @ 6"	644 @ 6"	645 @ 6"	646 @ 6"			
BAR E	463 @ 12"	555 @ 12"	557 @ 12"	468 @ 6"	469 @ 6"			
BAR F	463 @ 12"	465 @ 12"	467 @ 12"	468 @ 12"	469 @ 12"			
BAR G IN 2 SLABS	64 - 401	68 - 401	68 - 401	80 - 401	80 - 401			
BAR H IN 3 WALLS	42 - 402	42 - 402	42 - 402	50 - 402	50 - 402			
BAR J IN EXT. CORNER	0	0	0	0	3-434B @ 14½			
BAR J IN INT. CORNER	0	3-425B @ 10¼"	3-431B @ 11½"	4-433B @ 13"	4-436B @ 11¾"			
T_1	14"	16"	18"	20"	22"			
T_2	15"	17"	19"	21"	23"			
T_3	14"	16"	18"	20"	22"			
X	23'-4"	23'-8"	24'-0"	24'-4"	24'-8"			
Y	12'-5"	12'-9"	13'-1"	13'-5"	13'-9"			
YD^3 CLASS AA CONCRETE/FT	3.342	3.787	4.241	4.703	5.173			
LB BAR REINF STEEL/FT	308.1	382.8	502.2	536.0	652.2			
PARAPET, BARREL END, AND TOEWALL QUANTITIES - 90° SKEW - TOTAL								
YD^3 CLASS AA CONCRETE	11.2	11.7	12.2	12.7	13.2			
LB BAR REINF STEEL	1467	1503	1501	1674	1672			
PARAPET, BARREL END, AND TOEWALL QUANTITIES - 75° SKEW - TOTAL								
YD^3 CLASS AA CONCRETE	11.7	12.2	12.7	13.2	13.7			
LB BAR REINF STEEL	1805	1845	1847	2027	2029			
PARAPET, BARREL END, AND TOEWALL QUANTITIES - 60° SKEW - TOTAL								
YD^3 CLASS AA CONCRETE	13.0	13.6	14.1	14.7	15.3			
LB BAR REINF STEEL	1909	1950	1954	2136	2140			
PARAPET, BARREL END, AND TOEWALL QUANTITIES - 45° SKEW - TOTAL								
YD^3 CLASS AA CONCRETE	16.0	16.7	17.4	18.0	18.8			
LB BAR REINF STEEL	2157	2201	2207	2395	2402			

DOUBLE 10'-0" X 11'-0" BOX CULVERT

BARREL REINFORCEMENT QUANTITIES AND DIMENSIONS

DESIGN	1	2	3	4	5	6	7	8
BAR A	486A @ 6"	716A @ 12"	582A @ 6"	801A @ 12"	611A @ 6"			
BAR B	551 @ 6"	624 @ 6"	723 @ 6"	714 @ 6"	804 @ 6"			
BAR C	743 @ 12"	571 @ 6"	644 @ 6"	645 @ 6"	646 @ 6"			
BAR E	558 @ 12"	469 @ 6"	470 @ 6"	635 @ 12"	735 @ 12"			
BAR F	468 @ 12"	469 @ 12"	470 @ 12"	471 @ 12"	473 @ 12"			
BAR G IN 2 SLABS	64 - 401	68 - 401	68 - 401	80 - 401	80 - 401			
BAR H IN 3 WALLS	44 - 402	44 - 402	44 - 402	56 - 402	56 - 402			
BAR J IN EXT. CORNER	0	0	0	0	3-434B @ 14½"			
BAR J IN INT. CORNER	0	3-425B @ 10¼"	3-426B @ 11½"	4-433B @ 13"	5-436B @ 11½"			
T_1	14"	16"	18"	20"	22"			
T_2	15"	17"	19"	21"	23"			
T_3	14"	16"	18"	20"	22"			
X	23'-4"	23'-8"	24'-0"	24'-4"	24'-8"			
Y	13'-5"	13'-9"	14'-1"	14'-5"	14'-9"			
YD^3 CLASS AA CONCRETE/FT	3.465	3.923	4.389	4.863	5.346			
LB BAR REINF STEEL/FT	356.0	441.3	521.3	588.5	697.6			
PARAPET, BARREL END, AND TOEWALL QUANTITIES - 90° SKEW - TOTAL								
YD^3 CLASS AA CONCRETE	11.5	12.0	12.5	13.0	13.5			
LB BAR REINF STEEL	1491	1527	1525	1724	1722			
PARAPET, BARREL END, AND TOEWALL QUANTITIES - 75° SKEW - TOTAL								
YD^3 CLASS AA CONCRETE	11.9	12.4	13.0	13.5	14.0			
LB BAR REINF STEEL	1829	1869	1872	2078	2081			
PARAPET, BARREL END, AND TOEWALL QUANTITIES - 60° SKEW - TOTAL								
YD^3 CLASS AA CONCRETE	13.3	13.9	14.5	15.1	15.7			
LB BAR REINF STEEL	1934	1975	1979	2189	2193			
PARAPET, BARREL END, AND TOEWALL QUANTITIES - 45° SKEW - TOTAL								
YD^3 CLASS AA CONCRETE	16.4	17.1	17.8	18.5	19.2			
LB BAR REINF STEEL	2182	2226	2233	2450	2457			

DOUBLE 10'-0" X 12'-0" BOX CULVERT

BARREL REINFORCEMENT QUANTITIES AND DIMENSIONS

DESIGN	1	2	3	4	5	6	7	8
BAR A	485A @ 6"	717A @ 12"	584A @ 6"	612A @ 6"	613A @ 6"			
BAR B	547 @ 6"	619 @ 6"	719 @ 6"	719 @ 6"	802 @ 6"			
BAR C	743 @ 12"	571 @ 6"	644 @ 6"	645 @ 6"	646 @ 6"			
BAR E	561 @ 12"	473 @ 6"	474 @ 6"	736 @ 12"	737 @ 12"			
BAR F	471 @ 12"	473 @ 12"	474 @ 12"	475 @ 12"	476 @ 12"			
BAR G IN 2 SLABS	64 - 401	68 - 401	68 - 401	80 - 401	80 - 401			
BAR H IN 3 WALLS	50 - 402	50 - 402	50 - 402	66 - 402	66 - 402			
BAR J IN EXT. CORNER	0	0	0	0	3-434B @ 14½"			
BAR J IN INT. CORNER	0	3-425B @ 10¼"	3-431B @ 11½"	4-433B @ 13"	5-436B @ 11½"			
T_1	14"	16"	18"	20"	22"			
T_2	15"	17"	19"	21"	23"			
T_3	14"	16"	18"	20"	22"			
X	23'-4"	23'-8"	24'-0"	24'-4"	24'-8"			
Y	14'-5"	14'-9"	15'-1"	15'-5"	15'-9"			
YD^3 CLASS AA CONCRETE/FT	3.588	4.059	4.537	5.024	5.519			
LB BAR REINF STEEL/FT	353.0	455.1	535.0	653.6	719.4			
PARAPET, BARREL END, AND TOEWALL QUANTITIES - 90° SKEW - TOTAL								
YD^3 CLASS AA CONCRETE	11.8	12.3	12.9	13.4	13.9			
LB BAR REINF STEEL	1543	1579	1577	1802	1800			
PARAPET, BARREL END, AND TOEWALL QUANTITIES - 75° SKEW - TOTAL								
YD^3 CLASS AA CONCRETE	12.3	12.8	13.3	13.9	14.5			
LB BAR REINF STEEL	1883	1923	1925	2159	2162			
PARAPET, BARREL END, AND TOEWALL QUANTITIES - 60° SKEW - TOTAL								
YD^3 CLASS AA CONCRETE	13.7	14.3	14.9	15.5	16.1			
LB BAR REINF STEEL	1988	2029	2033	2271	2275			
PARAPET, BARREL END, AND TOEWALL QUANTITIES - 45° SKEW - TOTAL								
YD^3 CLASS AA CONCRETE	16.8	17.6	18.3	19.1	19.8			
LB BAR REINF STEEL	2239	2283	2289	2536	2542			

DEPARTMENT OF TRANSPORTATION
STATE OF GEORGIA

STANDARD

REINFORCED CONCRETE DOUBLE BOX CULVERT 10'X9', 10'X10', 10'X11' AND 10'X12'

NO SCALE — SEPTEMBER 2017

DATE | REVISION | BY

DES. YSK
DRW. FGS
TRA. ____
CHK. JWB

(SUBMITTED) STATE DESIGN POLICY ENGINEER

(APPROVED) Margaret B Pirkle CHIEF ENGINEER

NUMBER 2402

SHEET 2N OF 3

STATE	PROJECT NUMBER	SHEET NO.	TOTAL SHEETS
GA.			

MARK	LENGTH	TYPE
401	L* - 4"	1
402	L* + 20"	1
403	3'-7"	1
404	3'-9"	1
405	3'-11"	1
406	4'-0"	1
407	4'-1"	1
408	4'-2"	1
409	4'-3"	1
410	4'-4"	1
411	4'-6"	1
412	4'-8"	1
413	4'-10"	1
414	5'-0"	1
415	5'-2"	1
416	5'-4"	1
417	5'-6"	1
418	5'-8"	1
419	5'-10"	1
420	6'-0"	1
421	6'-2"	1
422	6'-4"	1
423	6'-5"	1
424	6'-6"	1
425	6'-8"	1
426	6'-10"	1
427	6'-11"	1
428	7'-0"	1
429	7'-2"	1
430	7'-3"	1
431	7'-4"	1
432	7'-6"	1
433	7'-7"	1
434	7'-8"	1
435	7'-9"	1
436	7'-10"	1
437	8'-0"	1
438	8'-2"	1
439	8'-3"	1
440	8'-4"	1
441	8'-6"	1
442	8'-8"	1
443	8'-10"	1
444	9'-0"	1
445	9'-2"	1
446	9'-3"	1
447	9'-4"	1
448	9'-6"	1
449	9'-8"	1
450	9'-10"	1
451	10'-0"	1
452	10'-2"	1
453	10'-4"	1
454	10'-6"	1
455	10'-8"	1
456	10'-10"	1
457	11'-0"	1
458	11'-2"	1
459	11'-4"	1
460	11'-6"	1
461	11'-8"	1
462	11'-10"	1
463	12'-0"	1
464	12'-2"	1
465	12'-4"	1
466	12'-6"	1
467	12'-8"	1
468	13'-0"	1
469	13'-4"	1
470	13'-8"	1
471	14'-0"	1
472	14'-2"	1
473	14'-4"	1
474	14'-8"	1
475	15'-0"	1
476	15'-4"	1
477	16'-4"	1
478	18'-8"	1
479	18'-10"	1

MARK	LENGTH	TYPE
480	21'-0"	1
481	21'-2"	1
482	23'-0"	1
501	4'-0"	1
502	4'-2"	1
503	4'-5"	1
504	4'-9"	1
505	4'-10"	1
506	5'-0"	1
507	5'-2"	1
508	5'-4"	1
509	5'-6"	1
510	5'-8"	1
511	5'-9"	1
512	5'-10"	1
513	6'-0"	1
514	6'-2"	1
515	6'-4"	1
516	6'-5"	1
517	6'-7"	1
518	6'-11"	1
519	7'-0"	1
520	7'-1"	1
521	7'-2"	1
522	7'-3"	1
523	7'-4"	1
524	7'-5"	1
525	7'-6"	1
526	7'-7"	1
527	7'-8"	1
528	7'-9"	1
529	7'-10"	1
530	7'-11"	1
531	8'-0"	1
532	8'-2"	1
533	8'-4"	1
534	8'-6"	1
535	8'-8"	1
536	8'-10"	1
537	9'-0"	1
538	9'-2"	1
539	9'-4"	1
540	9'-6"	1
541	9'-10"	1
542	10'-0"	1
543	10'-2"	1
544	10'-4"	1
545	10'-8"	1
546	10'-10"	1
547	11'-0"	1
548	11'-2"	1
549	11'-4"	1
550	11'-6"	1
551	11'-8"	1
552	11'-10"	1
553	12'-0"	1
554	12'-2"	1
555	12'-4"	1
556	12'-6"	1
557	12'-8"	1
558	13'-0"	1
559	13'-6"	1
560	13'-10"	1
561	14'-0"	1
562	14'-2"	1
563	14'-4"	1
564	14'-6"	1
565	14'-8"	1
566	16'-2"	1
567	16'-4"	1
568	16'-6"	1
569	19'-0"	1
570	21'-4"	1
571	23'-4"	1
572	23'-8"	1

MARK	LENGTH	TYPE
601	4'-9"	1
602	5'-3"	1
603	5'-6"	1
604	5'-7"	1
605	5'-8"	1
606	6'-2"	1
607	6'-4"	1
608	6'-7"	1
609	6'-11"	1
610	7'-3"	1
611	7'-4"	1
612	8'-0"	1
613	8'-4"	1
614	8'-10"	1
615	9'-2"	1
616	9'-4"	1
617	9'-6"	1
618	10'-1"	1
619	10'-2"	1
620	10'-6"	1
621	10'-8"	1
622	10'-10"	1
623	11'-2"	1
624	11'-3"	1
625	11'-6"	1
626	11'-8"	1
627	11'-10"	1
628	12'-2"	1
629	12'-3"	1
630	12'-5"	1
631	12'-8"	1
632	13'-0"	1
633	13'-6"	1
634	13'-8"	1
635	14'-0"	1
636	14'-2"	1
637	14'-8"	1
638	16'-8"	1
639	16'-10"	1
640	19'-2"	1
641	19'-4"	1
642	21'-6"	1
643	21'-8"	1
644	23'-8"	1
645	24'-0"	1
646	24'-4"	1

MARK	LENGTH	TYPE
701	7'-8"	1
702	7'-10"	1
703	8'-4"	1
704	8'-6"	1
705	8'-8"	1
706	8'-10"	1
707	9'-0"	1
708	9'-2"	1
709	9'-3"	1
710	9'-4"	1
711	9'-6"	1
712	9'-8"	1
713	9'-10"	1
714	10'-0"	1
715	10'-2"	1
716	10'-4"	1
717	10'-8"	1
718	11'-0"	1
719	11'-4"	1
720	11'-6"	1
721	11'-8"	1
722	11'-10"	1
723	12'-0"	1
724	12'-2"	1
725	12'-3"	1
726	12'-4"	1
727	12'-6"	1
728	12'-8"	1
729	13'-0"	1
730	13'-2"	1
731	13'-4"	1
732	13'-6"	1
733	13'-8"	1
734	14'-0"	1
735	14'-4"	1
736	15'-0"	1
737	15'-4"	1
738	16'-2"	1
739	18'-8"	1
740	18'-10"	1
741	21'-0"	1
742	21'-2"	1
743	23'-0"	1
801	10'-4"	1
802	11'-0"	1
803	11'-3"	1
804	11'-6"	1
805	11'-8"	1
806	12'-0"	1
807	12'-4"	1
808	12'-8"	1
809	13'-0"	1
810	13'-2"	1
811	13'-4"	1

MARK	LENGTH	TYPE	A	B
401A	4'-2"	3	1'-7"	2'-7"
402A	4'-3"	3	1'-8"	2'-7"
403A	4'-4"	3	1'-8"	2'-8"
404A	4'-4"	3	1'-9"	2'-7"
405A	4'-5"	3	1'-9"	2'-8"
406A	4'-6"	3	1'-10"	2'-8"
407A	4'-7"	3	1'-10"	2'-9"
408A	4'-8"	3	2'-1"	2'-7"
409A	4'-9"	3	2'-0"	2'-9"
410A	5'-0"	3	2'-2"	2'-10"
411A	5'-4"	3	1'-9"	3'-7"
412A	5'-5"	3	1'-9"	3'-8"
413A	5'-6"	3	1'-10"	3'-8"
414A	5'-8"	3	1'-11"	3'-9"
415A	5'-8"	3	2'-1"	3'-7"
416A	5'-9"	3	2'-0"	3'-9"
417A	6'-0"	3	2'-2"	3'-10"
418A	6'-0"	3	2'-4"	3'-8"
419A	6'-3"	3	2'-4"	3'-11"
420A	6'-6"	3	1'-11"	4'-7"
421A	6'-6"	3	2'-6"	4'-0"
422A	6'-7"	3	2'-0"	4'-7"
423A	6-8"	3	2'-0"	4'-8"
424A	6'-9"	3	2'-0"	4'-9"
425A	6'-9"	3	2'-1"	4'-8"
426A	6'-9"	3	2'-8"	4'-1"
427A	6'-10"	3	2'-1"	4'-9"
428A	6'-10"	3	2'-3"	4'-7"
429A	6'-11"	3	2'-2"	4'-9"
430A	6'-11"	3	2'-3"	4'-8"
431A	7'-0"	3	2'-2"	4'-10"
432A	7'-1"	3	2'-3"	4'-10"
433A	7'-1"	3	2'-11"	4'-2"
434A	7'-5"	3	3'-2"	4'-3"
435A	7'-6"	3	3'-5"	4'-1"
436A	7'-7"	3	2'-7"	5'-0"
437A	7'-9"	3	2'-2"	5'-7"
438A	7'-10"	3	2'-2"	5'-8"
439A	7'-10"	3	2'-3"	5'-7"
440A	7'-10"	3	2'-9"	5'-1"
441A	7'-10"	3	3'-3"	4'-7"
442A	8'-0"	3	2'-3"	5'-9"
443A	8'-1"	3	2'-4"	5'-9"
444A	8'-2"	3	3'-0"	5'-2"
445A	8'-3"	3	2'-5"	5'-10"
446A	8'-3"	3	2'-7"	5'-8"
447A	8'-3"	3	2'-8"	5'-7"
448A	8'-4"	3	3'-1"	5'-3"
449A	8'-5"	3	3'-4"	5'-1"
450A	8'-6"	3	3'-3"	5'-3"
451A	8'-8"	3	2'-8"	6'-0"
452A	8'-10"	3	3'-3"	5'-7"
453A	8'-11"	3	2'-10"	6'-1"
454A	9'-1"	3	2'-5"	6'-8"
455A	9'-1"	3	2'-6"	6'-7"
456A	9'-2"	3	2'-5"	6'-9"
457A	9'-3"	3	3'-1"	6'-2"
458A	9'-4"	3	2'-7"	6'-9"
459A	9'-5"	3	3'-2"	6'-3"
460A	9'-5"	3	3'-4"	6'-1"
461A	9'-6"	3	3'-3"	6'-3"
462A	9'-10"	3	2'-10"	7'-0"
463A	9'-11"	3	3'-3"	6'-8"
464A	10'-1"	3	3'-0"	7'-1"
465A	10'-4"	3	3'-2"	7'-2"
466A	10'-5"	3	2'-2"	7'-7"
467A	10'-6"	3	2'-10"	7'-8"
468A	10'-6"	3	2'-11"	7'-7"
469A	10'-7"	3	2'-10"	7'-9"
470A	10'-7"	3	3'-4"	7'-3"
471A	10'-8"	3	3'-5"	7'-3"
472A	10'-9"	3	4'-2"	6'-7"
473A	11'-1"	3	3'-1"	8'-0"
474A	11'-6"	3	3'-4"	8'-2"
475A	11'-9"	3	3'-6"	8'-3"
476A	12'-4"	3	3'-4"	9'-0"
477A	12'-5"	3	4'-9"	7'-8"
478A	12'-9"	3	3'-7"	9'-2"

MARK	LENGTH	TYPE	A	B
479A	13'-0"	3	3'-9"	9'-3"
480A	13'-5"	3	4'-4"	9'-1"
481A	13'-7"	3	3'-7"	10'-0"
482A	13'-8"	3	3'-9"	9'-11"
483A	14'-0"	3	3'-10"	10'-2"
484A	14'-2"	3	3'-11"	10'-3"
485A	16'-8"	3	4'-7"	12'-1"
486A	18'-1"	3	7'-0"	11'-1"
501A	4'-4"	3	1'-9"	2'-7"
502A	4'-8"	3	2'-1"	2'-7"
503A	5'-3"	3	2'-4"	2'-11"
504A	5'-6"	3	1'-11"	3'-7"
505A	5'-8"	3	2'-1"	3'-7"
506A	6'-3"	3	2'-4"	3'-11"
507A	6'-6"	3	2'-6"	4'-0"
508A	6'-8"	3	2'-1"	4'-7"
509A	6'-10"	3	2'-11"	3'-11"
510A	7'-0"	3	2'-5"	4'-7"
511A	7'-0"	3	2'-10"	4'-2"
512A	7'-3"	3	2'-4"	4'-11"
513A	7'-4"	3	3'-3"	4'-1"
514A	7'-5"	3	3'-2"	4'-3"
515A	7'-6"	3	2'-6"	5'-0"
516A	7'-7"	3	3'-3"	4'-4"
517A	7'-9"	3	2'-10"	4'-11"
518A	7'-11"	3	2'-4"	5'-7"
519A	8'-0"	3	2'-4"	5'-8"
520A	8'-0"	3	3'-7"	4'-5"
521A	8'-1"	3	2'-5"	5'-8"
522A	8'-3"	3	2'-6"	5'-9"
523A	8'-3"	3	3'-2"	5'-1"
524A	8'-4"	3	3'-9"	4'-7"
525A	8'-5"	3	2'-6"	5'-11"
526A	8'-5"	3	3'-2"	5'-3"
527A	8'-7"	3	3'-3"	5'-4"
528A	8'-8"	3	2'-8"	6'-0"
529A	8'-11"	3	3'-0"	5'-11"
530A	9'-0"	3	3'-7"	5'-5"
531A	9'-3"	3	3'-2"	6'-1"
532A	9'-4"	3	2'-8"	6'-8"
533A	9'-5"	3	3'-2"	6'-3"
534A	9'-5"	3	3'-10"	5'-7"
535A	9'-6"	3	2'-8"	6'-10"
536A	9'-6"	3	2'-9"	6'-9"
537A	9'-7"	3	2'-8"	6'-11"
538A	9'-8"	3	2'-9"	6'-11"
539A	9'-8"	3	3'-4"	6'-4"
540A	9'-10"	3	4'-1"	5'-9"
541A	10'-0"	3	3'-7"	6'-5"
542A	10'-2"	3	3'-2"	7'-0"
543A	10'-3"	3	3'-2"	7'-1"
544A	10'-3"	3	3'-4"	6'-11"
545A	10'-4"	3	3'-2"	7'-2"
546A	10'-5"	3	3'-10"	6'-7"
547A	10'-6"	3	2'-11"	7'-7"
548A	10'-7"	3	2'-11"	7'-8"
549A	10'-7"	3	3'-4"	7'-3"
550A	10'-7"	3	3'-6"	7'-1"
551A	10'-8"	3	2'-10"	7'-10"
552A	10'-8"	3	2'-11"	7'-9"
553A	10'-9"	3	3'-5"	7'-4"
554A	10'-10"	3	3'-0"	7'-10"
555A	10'-11"	3	3'-0"	7'-11"
556A	10'-11"	3	4'-2"	6'-9"
557A	11'-0"	3	3'-7"	7'-5"
558A	11'-1"	3	3'-2"	7'-11"
559A	11'-5"	3	3'-4"	8'-1"
560A	11'-7"	3	3'-5"	8'-2"
561A	11'-7"	3	4'-0"	7'-7"
562A	11'-11"	3	3'-7"	8'-4"
563A	11'-11"	3	3'-8"	8'-3"
564A	12'-0"	3	3'-11"	8'-1"
565A	12'-0"	3	4'-3"	7'-9"
566A	12'-3"	3	3'-10"	8'-5"
567A	12'-8"	3	4'-1"	8'-7"

MARK	LENGTH	TYPE	A	B
568A	12'-11"	3	3'-9"	9'-2"
569A	13'-2"	3	3'-10"	9'-4"
570A	13'-2"	3	4'-5"	8'-9"
571A	13'-8"	3	5'-9"	7'-11"
572A	13'-9"	3	3'-8"	10'-1"
573A	13'-10"	3	4'-3"	9'-7"
574A	14'-2"	3	3'-11"	10'-3"
575A	14'-4"	3	4'-3"	10'-1"
576A	14'-4"	3	4'-7"	9'-9"
577A	14'-6"	3	4'-2"	10'-4"
578A	14'-7"	3	4'-2"	10'-5"
579A	14'-8"	3	5'-9"	8'-11"
580A	15'-1"	3	4'-6"	10'-7"
581A	15'-7"	3	6'-6"	9'-1"
582A	15'-10"	3	4'-5"	11'-5"
563A	16'-7"	3	6'-6"	10'-1"
584A	17'-2"	3	4'-9"	12'-5"
601A	8'-10"	3	4'-1"	4'-9"
602A	10'-9"	3	3'-1"	7'-8"
603A	10'-11"	3	3'-2"	7'-9"
604A	11'-2"	3	3'-2"	8'-0"
605A	13'-0"	3	3'-9"	9'-3"
606A	13'-4"	3	3'-11"	9'-5"
607A	14'-2"	3	4'-0"	10'-2"
608A	14'-5"	3	4'-2"	10'-3"
609A	14'-8"	3	4'-3"	10'-5
610A	15'-6"	3	4'-9"	10'-9"
611A	16'-9"	3	5'-0"	11'-9"
612A	17'-6"	3	4'-11"	12'-7"
613A	18'-0"	3	5'-3"	12'-9"
701A	7'-7"	3	2'-8"	4'-11"
702A	7'-9"	3	3'-6"	4'-3"
703A	8'-4"	3	3'-11"	4'-5"
704A	8'-7"	3	2'-9"	5'-10"
705A	8'-8"	3	3'-6"	5'-2"
706A	9'-3"	3	3'-10"	5'-5"
707A	9'-9	3	3'-7"	6'-2"
708A	10'-3"	3	3'-10"	6'-5"
709A	11'-4"	3	3'-11"	7'-5"
710A	11'-5"	3	3'-4"	8'-1"
711A	12'-2"	3	3'-11"	8'-3"
712A	12'-7"	3	4'-2"	8'-5"
713A	12'-9"	3	3'-8"	9'-1"
714A	13'-6"	3	4'-3"	9'-3"
715A	13'-10"	3	4'-5"	9'-5"
716A	15'-11"	3	4'-8"	11'-3"
717A	17'-5"	3	5'-2"	12'-3"
801A	17'-2"	3	5'-7"	11'-7"

MARK	LENGTH	TYPE	A	B
401B	3'-11 1/2"	6	1'-11 1/2"	0'-6"
402B	3'-1 5/8"	6	1'-1 5/8"	0'-6"
403B	3'-3 1/2"	6	1'-1 1/2"	0'-7"
404B	3'-3 5/8"	6	1'-1 5/8"	0'-7"
405B	3'-3 3/4"	6	1'-1 3/4"	0'-7"
406B	3'-5 1/2"	6	1'-1 1/2"	0'-8"
407B	3'-5 5/8"	6	1'-1 5/8"	0'-8"
408B	3'-5 3/4"	6	1'-1 3/4"	0'-8"
409B	3'-7 1/2"	6	1'-1 1/2"	0'-9"
410B	3'-7 5/8"	6	1'-1 5/8"	0'-9"
411B	3'-7 3/4"	6	1'-1 3/4"	0'-9"
412B	3'-7 7/8"	6	1'-1 7/8"	0'-9"
413B	3'-9 1/2"	6	1'-1 1/2"	0'-10"
414B	3'-9 5/8"	6	1'-1 5/8"	0'-10"
415B	3'-9 3/4"	6	1'-1 3/4"	0'-10"
416B	3'-9 7/8"	6	1'-1 7/8"	0'-10"
417B	3'-11 5/8"	6	1'-1 5/8"	0'-11"
418B	3'-11 3/4"	6	1'-1 3/4"	0'-11"
419B	3'-11 7/8"	6	1'-1 7/8"	0'-11"
420B	4'-1 3/4"	6	1'-1 3/4"	1'-0"
421B	4'-3 5/8"	6	1'-1 5/8"	1'-1"
422B	4'-3 3/4"	6	1'-1 3/4"	1'-1"
423B	4'-3 7/8"	6	1'-1 7/8"	1'-1"
424B	4'-5 5/8"	6	1'-1 5/8"	1'-2"
425B	4'-5 3/4"	6	1'-1 3/4"	1'-2"
426B	4'-5 7/8"	6	1'-1 7/8"	1'-2"
427B	4'-7 5/8"	6	1'-1 5/8"	1'-3"
428B	4'-7 7/8"	6	1'-1 7/8"	1'-3"
429B	4'-9 5/8"	6	1'-1 5/8"	1'-4"
430B	4'-9 3/4"	6	1'-1 3/4"	1'-4"
431B	4'-9 7/8"	6	1'-1 7/8"	1'-4"
432B	4'-10"	6	1'-2"	1'-4"
433B	5'-1 7/8"	6	1'-1 7/8"	1'-6"
434B	5'-5 3/4"	6	1'-1 3/4"	1'-8"
435B	5'-5 7/8"	6	1'-1 7/8"	1'-8"
436B	5'-6"	6	1'-2"	1'-8"

• L = LENGTH OF CULVERT

BY	DATE	REVISION

DEPARTMENT OF TRANSPORTATION
STATE OF GEORGIA

STANDARD
REINFORCED CONCRETE
DOUBLE BOX CULVERT

NO SCALE — SEPTEMBER 2017

DES. YSK
DRW. FGS
TRA. ____
CHK. JWB

(SUBMITTED) STATE DESIGN POLICY ENGINEER

(APPROVED) Margaret B Pinelo
CHIEF ENGINEER

NUMBER 2402
SHEET 3 OF 3

STATE	PROJECT NUMBER	SHEET NO.	TOTAL SHEETS
GA.			

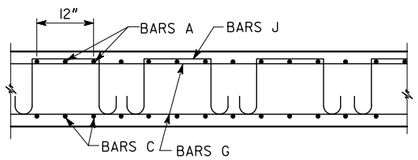

TOP SLAB

NOTE: SPACING OF BARS A AND C IS 6" OR 12". SEE BARREL REINFORCEMENT QUANTITIES AND DIMENSIONS.

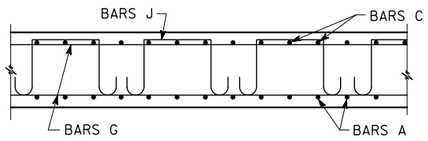

BOTTOM SLAB

NOTE: LONGITUDINAL WINGWALL AND PARAPET BARS EXTEND INTO BARREL. SEE WINGWALL AND PARAPET STANDARDS.

SECTION A-A

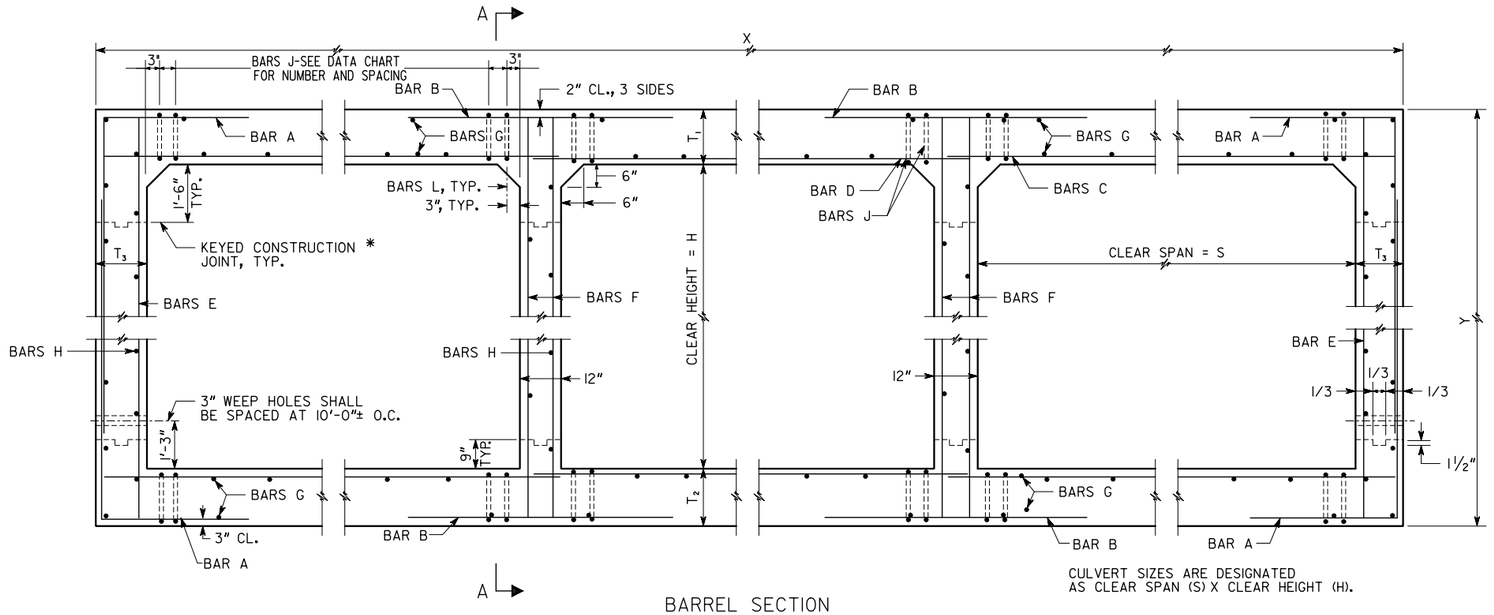

BARREL SECTION

CULVERT SIZES ARE DESIGNATED AS CLEAR SPAN (S) X CLEAR HEIGHT (H).

* AT CONTRACTORS OPTION, THE LOWER CONSTRUCTION JOINT IN THE BARREL WALL MAY BE SHIFTED TO 6" ABOVE THE TOP OF THE BOTTOM SLAB.

FOR BAR DIMENSIONS SEE BAR REINFORCEMENT DETAILS. NUMBER OF J BARS SHOWN IN DATA CHART IS THE NUMBER PER CORNER IN ANY ONE TRANSVERSE PLANE. THE TOTAL NUMBER OF J BARS REQUIRED DEPENDS UPON THE LENGTH OF THE SECTION.

DESIGN	1	2	3	4	5	6	7	8
MAXIMUM FILL HEIGHT	10'	20'	30'	40'	50'	60'	70'	80'

1) MINIMUM HEIGHT FROM TOP OF CULVERT TO BOTTOM OF BASE WITHIN TRAVELWAY SHALL BE 1'-0".

2) DESIGN OF THE CULVERT SHALL BE DETERMINED BY THE MAXIMUM HEIGHT OF FILL WITH ONLY A SINGLE DESIGN BEING USED FOR THE ENTIRE INSTALLATION.

3) TRANSVERSE CONSTRUCTION JOINTS SHALL BE PLACED NORMAL TO THE CENTERLINE OF THE CULVERT AT THE OUTSIDE SHOULDER BREAK POINTS. THE MAXIMUM POUR LENGTH ALONG THE LENGTH OF THE CULVERT SHALL NOT EXCEED 40'-0" FOR DESIGNS 1 TO 3 AND 30'-0" FOR DESIGNS 4 AND ABOVE.

4) LONGITUDINAL BARREL REINFORCEMENT STEEL IN THE TRANSVERSE CONSTRUCTION JOINTS SHALL EXTEND THROUGH JOINTS.

5) CONSTRUCTION JOINTS SHALL BE WATERPROOFED ON THE EXTERIOR TOP AND SIDES OF BARREL IN ACCORDANCE WITH SECTION 530 OF GEORGIA STANDARD SPECIFICATIONS. WATERFPROOFING SHALL BE APPLIED WHEN CONCRETE IS AT LEAST 7 DAYS OLD. ALL COSTS ASSOCIATED WITH WATERPROOFING SHALL BE INCLUDED IN OTHER ITEMS AND WILL NOT BE MEASURED SEPARATELY FOR PAYMENT.

6) MINIMUM LENGTH OF LAP SPLICE FOR LONGITUDINAL BARREL REINFORCING STEEL SHALL BE 2'-0".

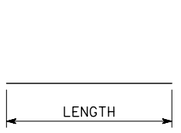

TYPE 1

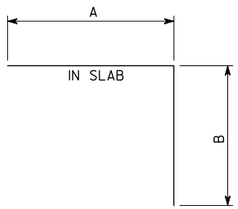

TYPE 3

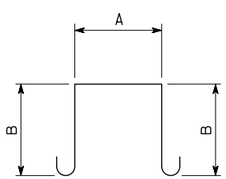

BAR J - NO. 4

TYPE 6

A = 12" + DIAMETER BAR A + 1"
B = T_1 - 3"

GENERAL NOTES

1) SPECIFICATIONS: GEORGIA STANDARD, CURRENT EDITION & SUPPLEMENTS THERETO.

2) ALL CONCRETE SHALL BE CLASS "AA".

3) CHAMFER ALL EXPOSED EDGES ¾".

4) COST OF DRAIN PIPES, WEEP HOLES, COARSE AGGREGATE, AND ANY OTHER INCIDENTAL ITEMS SHALL BE INCLUDED IN THE PRICE BID FOR CONTRACT ITEMS.

5) CONSTRUCTION JOINTS IN BARREL WALLS ARE REQUIRED.

6) FOR DETAILS OF WINGWALLS AND PARAPETS SEE "REINFORCED CONCRETE WINGWALLS, TOEWALLS AND PARAPETS FOR CONCRETE BOX CULVERTS" SHEETS.

DESIGN DATA

SPECIFICATIONS - AASHTO LRFD BRIDGE DESIGN SPECIFICATIONS, 7TH EDITION, 2014.
TYPICAL HL-93 LOADING.

DEPARTMENT OF TRANSPORTATION
STATE OF GEORGIA

STANDARD

REINFORCED CONCRETE TRIPLE BOX CULVERT

NO SCALE — SEPTEMBER 2017

DATE	REVISION	BY

DES. YSK
DRW. FGS
TRA. ___
CHK. JWB

(SUBMITTED) STATE DESIGN POLICY ENGINEER

(APPROVED) Margaret B Pinkle CHIEF ENGINEER

NUMBER 2403

SHEET 1 OF 3

STATE	PROJECT NUMBER	SHEET NO.	TOTAL SHEETS
GA.			

TRIPLE 4'-0" X 3'-0" BOX CULVERT

BARREL REINFORCEMENT QUANTITIES AND DIMENSIONS

DESIGN	1	2	3	4	5	6	7	8
BAR A	404A @ 12"	501A @ 12"	401A @ 6"	401A @ 6"	405A @ 6"			
BAR B	540 @ 12"	526 @ 12"	438 @ 6"	438 @ 6"	439 @ 6"			
BAR C	504 @ 12"	410 @ 6"	410 @ 6"	504 @ 6"	505 @ 6"			
BAR D	506 @ 12"	506 @ 12"	412 @ 6"	412 @ 6"	412 @ 6"			
BAR E	403 @ 12"	403 @ 12"	403 @ 12"	403 @ 12"	404 @ 12"			
BAR F	403 @ 12"	403 @ 12"	403 @ 12"	403 @ 12"	404 @ 12"			
BAR G IN 2 SLABS	48 - 401	48 - 401	48 - 401	48 - 401	48 - 401			
BAR H IN 4 WALLS	18 - 402	18 - 402	18 - 402	18 - 402	18 - 402			
BAR J IN EXT. CORNER	0	0	0	3-401B @ 4½"	3-403B @ 5"			
BAR J IN INT. CORNER	0	0	3-401B @ 4½"	4-401B @ 4½"	4-403B @ 5"			
T_1	8"	8"	8"	8"	9"			
T_2	9"	9"	9"	9"	10"			
T_3	8"	8"	8"	8"	9"			
X	15'-4"	15'-4"	15'-4"	15'-4"	15'-6"			
Y	4'-5"	4'-5"	4'-5"	4'-5"	4'-7"			
YD^3 CLASS AA CONCRETE/FT	1.203	1.203	1.203	1.203	1.326			
LB BAR REINF STEEL/FT	128.2	137.1	175.4	212.2	217.6			
PARAPET, BARREL END, AND TOEWALL QUANTITIES - 90° SKEW - TOTAL								
YD^3 CLASS AA CONCRETE	5.6	5.6	5.6	5.6	5.7			
LB BAR REINF STEEL	918	918	918	918	919			
PARAPET, BARREL END, AND TOEWALL QUANTITIES - 75° SKEW - TOTAL								
YD^3 CLASS AA CONCRETE	5.9	5.9	5.9	5.9	6.0			
LB BAR REINF STEEL	1144	1144	1144	1144	1146			
PARAPET, BARREL END, AND TOEWALL QUANTITIES - 60° SKEW - TOTAL								
YD^3 CLASS AA CONCRETE	6.5	6.5	6.5	6.5	6.7			
LB BAR REINF STEEL	1213	1213	1213	1213	1216			
PARAPET, BARREL END, AND TOEWALL QUANTITIES - 45° SKEW - TOTAL								
YD^3 CLASS AA CONCRETE	8.1	8.1	8.1	8.1	8.2			
LB BAR REINF STEEL	1384	1384	1384	1384	1388			

TRIPLE 4'-0" X 4'-0" BOX CULVERT

BARREL REINFORCEMENT QUANTITIES AND DIMENSIONS

DESIGN	1	2	3	4	5	6	7	8
BAR A	416A @ 12"	504A @ 12"	411A @ 6"	411A @ 6"	412A @ 6"			
BAR B	544 @ 12"	526 @ 12"	434 @ 6"	436 @ 6"	439 @ 6"			
BAR C	504 @ 12"	410 @ 6"	410 @ 6"	504 @ 6"	505 @ 6"			
BAR D	506 @ 12"	506 @ 12"	412 @ 6"	412 @ 6"	412 @ 6"			
BAR E	408 @ 12"	408 @ 12"	408 @ 12"	408 @ 12"	409 @ 12"			
BAR F	408 @ 12"	408 @ 12"	408 @ 12"	408 @ 12"	409 @ 12"			
BAR G IN 2 SLABS	48 - 401	48 - 401	48 - 401	48 - 401	48 - 401			
BAR H IN 4 WALLS	24 - 402	24 - 402	24 - 402	24 - 402	24 - 402			
BAR J IN EXT. CORNER	0	0	0	3-401B @ 4½"	3-403B @ 5"			
BAR J IN INT. CORNER	0	0	3-401B @ 4½"	4-401B @ 4½"	4-403B @ 5"			
T_1	8"	8"	8"	8"	9"			
T_2	9"	9"	9"	9"	10"			
T_3	8"	8"	8"	8"	9"			
X	15'-4"	15'-4"	15'-4"	15'-4"	15'-6"			
Y	5'-5"	5'-5"	5'-5"	5'-5"	5'-7"			
YD^3 CLASS AA CONCRETE/FT	1.326	1.326	1.326	1.326	1.455			
LB BAR REINF STEEL/FT	140.5	150.0	188.7	226.0	231.0			
PARAPET, BARREL END, AND TOEWALL QUANTITIES - 90° SKEW - TOTAL								
YD^3 CLASS AA CONCRETE	6.4	6.4	6.4	6.4	6.5			
LB BAR REINF STEEL	961	961	961	961	961			
PARAPET, BARREL END, AND TOEWALL QUANTITIES - 75° SKEW - TOTAL								
YD^3 CLASS AA CONCRETE	6.7	6.7	6.7	6.7	6.8			
LB BAR REINF STEEL	1188	1188	1188	1188	1190			
PARAPET, BARREL END, AND TOEWALL QUANTITIES - 60° SKEW - TOTAL								
YD^3 CLASS AA CONCRETE	7.4	7.4	7.4	7.4	7.6			
LB BAR REINF STEEL	1258	1258	1258	1258	1261			
PARAPET, BARREL END, AND TOEWALL QUANTITIES - 45° SKEW - TOTAL								
YD^3 CLASS AA CONCRETE	9.2	9.2	9.2	9.2	9.4			
LB BAR REINF STEEL	1431	1431	1431	1431	1435			

TRIPLE 4'-0" X 5'-0" BOX CULVERT

BARREL REINFORCEMENT QUANTITIES AND DIMENSIONS

DESIGN	1	2	3	4	5	6	7	8
BAR A	432A @ 12"	508A @ 12"	421A @ 6"	422A @ 6"	426A @ 6"			
BAR B	552 @ 12"	526 @ 12"	432 @ 6"	436 @ 6"	439 @ 6"			
BAR C	504 @ 12"	410 @ 6"	410 @ 6"	504 @ 6"	505 @ 6"			
BAR D	506 @ 12"	506 @ 12"	412 @ 6"	412 @ 6"	412 @ 6"			
BAR E	414 @ 12"	414 @ 12"	507 @ 12"	507 @ 12"	508 @ 12"			
BAR F	414 @ 12"	414 @ 12"	414 @ 12"	414 @ 12"	415 @ 12"			
BAR G IN 2 SLABS	48 - 401	48 - 401	48 - 401	48 - 401	48 - 401			
BAR H IN 4 WALLS	26 - 402	26 - 402	26 - 402	26 - 402	26 - 402			
BAR J IN EXT. CORNER	0	0	0	3-401B @ 4½"	3-403B @ 5"			
BAR J IN INT. CORNER	0	0	3-401B @ 4½"	4-401B @ 4½"	4-403B @ 5"			
T_1	8"	8"	8"	8"	9"			
T_2	9"	9"	9"	9"	10"			
T_3	8"	8"	8"	8"	9"			
X	15'-4"	15'-4"	15'-4"	15'-4"	15'-6"			
Y	6'-5"	6'-5"	6'-5"	6'-5"	6'-7"			
YD^3 CLASS AA CONCRETE/FT	1.450	1.450	1.450	1.450	1.585			
LB BAR REINF STEEL/FT	151.1	160.6	204.3	242.6	248.1			
PARAPET, BARREL END, AND TOEWALL QUANTITIES - 90° SKEW - TOTAL								
YD^3 CLASS AA CONCRETE	6.6	6.6	6.6	6.6	6.8			
LB BAR REINF STEEL	985	985	985	985	985			
PARAPET, BARREL END, AND TOEWALL QUANTITIES - 75° SKEW - TOTAL								
YD^3 CLASS AA CONCRETE	6.9	6.9	6.9	6.9	7.1			
LB BAR REINF STEEL	1212	1212	1212	1212	1215			
PARAPET, BARREL END, AND TOEWALL QUANTITIES - 60° SKEW - TOTAL								
YD^3 CLASS AA CONCRETE	7.7	7.7	7.7	7.7	7.9			
LB BAR REINF STEEL	1283	1283	1283	1283	1286			
PARAPET, BARREL END, AND TOEWALL QUANTITIES - 45° SKEW - TOTAL								
YD^3 CLASS AA CONCRETE	9.5	9.5	9.5	9.5	9.7			
LB BAR REINF STEEL	1456	1456	1456	1456	1461			

TRIPLE 4'-0" X 6'-0" BOX CULVERT

BARREL REINFORCEMENT QUANTITIES AND DIMENSIONS

DESIGN	1	2	3	4	5	6	7	8
BAR A	444A @ 12"	440A @ 6"	440A @ 6"	520A @ 6"	521A @ 6"			
BAR B	549 @ 12"	526 @ 12"	431 @ 6"	436 @ 6"	439 @ 6"			
BAR C	504 @ 12"	410 @ 6"	410 @ 6"	504 @ 6"	505 @ 6"			
BAR D	506 @ 12"	506 @ 12"	412 @ 6"	412 @ 6"	412 @ 6"			
BAR E	421 @ 12"	512 @ 12"	512 @ 12"	421 @ 6"	422 @ 6"			
BAR F	421 @ 12"	421 @ 12"	421 @ 12"	421 @ 12"	422 @ 12"			
BAR G IN 2 SLABS	48 - 401	48 - 401	48 - 401	48 - 401	48 - 401			
BAR H IN 4 WALLS	34 - 402	34 - 402	34 - 402	34 - 402	34 - 402			
BAR J IN EXT. CORNER	0	0	2-401B @ 4½"	3-402B @ 4½"	3-404B @ 5"			
BAR J IN INT. CORNER	0	0	3-401B @ 4½"	4-401B @ 4½"	4-403B @ 5"			
T_1	8"	8"	8"	8"	9"			
T_2	9"	9"	9"	9"	10"			
T_3	8"	8"	8"	8"	9"			
X	15'-4"	15'-4"	15'-4"	15'-4"	15'-6"			
Y	7'-5"	7'-5"	7'-5"	7'-5"	7'-7"			
YD^3 CLASS AA CONCRETE/FT	1.573	1.573	1.573	1.573	1.715			
LB BAR REINF STEEL/FT	162.7	188.9	229.7	288.4	293.8			
PARAPET, BARREL END, AND TOEWALL QUANTITIES - 90° SKEW - TOTAL								
YD^3 CLASS AA CONCRETE	6.9	6.9	6.9	6.9	7.0			
LB BAR REINF STEEL	1036	1036	1036	1036	1037			
PARAPET, BARREL END, AND TOEWALL QUANTITIES - 75° SKEW - TOTAL								
YD^3 CLASS AA CONCRETE	7.2	7.2	7.2	7.2	7.3			
LB BAR REINF STEEL	1266	1266	1266	1266	1269			
PARAPET, BARREL END, AND TOEWALL QUANTITIES - 60° SKEW - TOTAL								
YD^3 CLASS AA CONCRETE	8.0	8.0	8.0	8.0	8.2			
LB BAR REINF STEEL	1338	1338	1338	1338	1341			
PARAPET, BARREL END, AND TOEWALL QUANTITIES - 45° SKEW - TOTAL								
YD^3 CLASS AA CONCRETE	9.9	9.9	9.9	9.9	10.1			
LB BAR REINF STEEL	1514	1514	1514	1514	1518			

DEPARTMENT OF TRANSPORTATION
STATE OF GEORGIA

STANDARD

REINFORCED CONCRETE TRIPLE BOX CULVERT 4'X3', 4'X4', 4'X5' AND 4'X6'

NO SCALE — SEPTEMBER 2017

BY	REVISION	DATE

DES. YSK
DRW. FGS
TRA. ___
CHK. JWB

(SUBMITTED) STATE DESIGN POLICY ENGINEER

(APPROVED) Margaret B Pirkle CHIEF ENGINEER

NUMBER 2403

SHEET 2A OF 3

STATE	PROJECT NUMBER	SHEET NO.	TOTAL SHEETS
GA.			

TRIPLE 5′-0″ X 3′-0″ BOX CULVERT

BARREL REINFORCEMENT QUANTITIES AND DIMENSIONS

DESIGN	1	2	3	4	5	6	7	8
BAR A	502A @ 12″	402A @ 6″	403A @ 6″	405A @ 6″	408A @ 6″			
BAR B	554 @ 12″	456 @ 6″	457 @ 6″	551 @ 6″	548 @ 6″			
BAR C	416 @ 6″	416 @ 6″	417 @ 6″	509 @ 6″	510 @ 6″			
BAR D	511 @ 12″	419 @ 6″	419 @ 6″	419 @ 6″	419 @ 6″			
BAR E	403 @ 12″	403 @ 12″	404 @ 12″	404 @ 12″	405 @ 12″			
BAR F	403 @ 12″	403 @ 12″	404 @ 12″	404 @ 12″	405 @ 12″			
BAR G IN 2 SLABS	54 - 401	54 - 401	60 - 401	60 - 401	60 - 401			
BAR H IN 4 WALLS	18 - 402	18 - 402	18 - 402	18 - 402	18 - 402			
BAR J IN EXT. CORNER	0	0	0	3-403B @ 5″	3-406B @ 5¾″			
BAR J IN INT. CORNER	0	0	3-403B @ 5″	4-404B @ 5″	4-407B @ 5¾″			
T_1	8″	8″	9″	9″	10″			
T_2	9″	9″	10″	10″	11″			
T_3	8″	8″	9″	9″	10″			
X	18′-4″	18′-4″	18′-6″	18′-6″	18′-8″			
Y	4′-5″	4′-5″	4′-7″	4′-7″	4′-9″			
YD^3 CLASS AA CONCRETE/FT	1.360	1.360	1.502	1.502	1.645			
LB BAR REINF STEEL/FT	156.6	170.1	202.5	261.6	265.8			
PARAPET, BARREL END, AND TOEWALL QUANTITIES - 90° SKEW - TOTAL								
YD^3 CLASS AA CONCRETE	6.6	6.6	6.7	6.7	6.8			
LB BAR REINF STEEL	1041	1041	1098	1098	1097			
PARAPET, BARREL END, AND TOEWALL QUANTITIES - 75° SKEW - TOTAL								
YD^3 CLASS AA CONCRETE	6.9	6.9	7.0	7.0	7.1			
LB BAR REINF STEEL	1306	1306	1365	1365	1367			
PARAPET, BARREL END, AND TOEWALL QUANTITIES - 60° SKEW - TOTAL								
YD^3 CLASS AA CONCRETE	7.7	7.7	7.8	7.8	7.9			
LB BAR REINF STEEL	1387	1387	1446	1446	1449			
PARAPET, BARREL END, AND TOEWALL QUANTITIES - 45° SKEW - TOTAL								
YD^3 CLASS AA CONCRETE	9.4	9.4	9.6	9.6	9.8			
LB BAR REINF STEEL	1583	1583	1644	1644	1648			

TRIPLE 5′-0″ X 4′-0″ BOX CULVERT

BARREL REINFORCEMENT QUANTITIES AND DIMENSIONS

DESIGN	1	2	3	4	5	6	7	8
BAR A	505A @ 12″	411A @ 6″	413A @ 6″	414A @ 6″	417A @ 6″			
BAR B	458 @ 6″	455 @ 6″	455 @ 6″	548 @ 6″	548 @ 6″			
BAR C	416 @ 6″	416 @ 6″	417 @ 6″	509 @ 6″	510 @ 6″			
BAR D	511 @ 12″	419 @ 6″	419 @ 6″	419 @ 6″	419 @ 6″			
BAR E	408 @ 12″	408 @ 12″	409 @ 12″	409 @ 12″	410 @ 12″			
BAR F	408 @ 12″	408 @ 12″	409 @ 12″	409 @ 12″	410 @ 12″			
BAR G IN 2 SLABS	54 - 401	54 - 401	60 - 401	60 - 401	60 - 401			
BAR H IN 4 WALLS	24 - 402	24 - 402	24 - 402	24 - 402	24 - 402			
BAR J IN EXT. CORNER	0	0	0	3-403B @ 5″	3-406B @ 5¾″			
BAR J IN INT. CORNER	0	0	3-403B @ 5″	4-404B @ 5″	4-407B @ 5¾″			
T_1	8″	8″	9″	9″	10″			
T_2	9″	9″	10″	10″	11″			
T_3	8″	8″	9″	9″	10″			
X	18′-4″	18′-4″	18′-6″	18′-6″	18′-8″			
Y	5′-5″	5′-5″	5′-7″	5′-7″	5′-9″			
YD^3 CLASS AA CONCRETE/FT	1.484	1.484	1.631	1.631	1.781			
LB BAR REINF STEEL/FT	175.8	183.5	215.9	274.5	279.2			
PARAPET, BARREL END, AND TOEWALL QUANTITIES - 90° SKEW - TOTAL								
YD^3 CLASS AA CONCRETE	7.5	7.5	7.6	7.6	7.7			
LB BAR REINF STEEL	1085	1085	1144	1144	1143			
PARAPET, BARREL END, AND TOEWALL QUANTITIES - 75° SKEW - TOTAL								
YD^3 CLASS AA CONCRETE	7.8	7.8	7.9	7.9	8.0			
LB BAR REINF STEEL	1352	1352	1413	1413	1414			
PARAPET, BARREL END, AND TOEWALL QUANTITIES - 60° SKEW - TOTAL								
YD^3 CLASS AA CONCRETE	8.7	8.7	8.8	8.8	9.0			
LB BAR REINF STEEL	1433	1433	1495	1495	1497			
PARAPET, BARREL END, AND TOEWALL QUANTITIES - 45° SKEW - TOTAL								
YD^3 CLASS AA CONCRETE	10.7	10.7	10.9	10.9	11.1			
LB BAR REINF STEEL	1632	1632	1695	1695	1699			

DEPARTMENT OF TRANSPORTATION
STATE OF GEORGIA

STANDARD

REINFORCED CONCRETE TRIPLE BOX CULVERT 5′X3 AND 5′X4′

NO SCALE — SEPTEMBER 2017

DATE / REVISION / BY

DES. YSK
DRW. FGS
TRA. ___
CHK. JWB

(SUBMITTED) STATE DESIGN POLICY ENGINEER
(APPROVED) Margaret B Pirkle CHIEF ENGINEER

NUMBER 2403
SHEET 2B OF 3

STATE	PROJECT NUMBER	SHEET NO.	TOTAL SHEETS
GA.			

TRIPLE 5'-0" X 5'-0" BOX CULVERT

BARREL REINFORCEMENT QUANTITIES AND DIMENSIONS

DESIGN	1	2	3	4	5	6	7	8
BAR A	510A @ 12"	421A @ 6"	424A @ 6"	424A @ 6"	430A @ 6"			
BAR B	462 @ 6"	453 @ 6"	453 @ 6"	547 @ 6"	546 @ 6"			
BAR C	416 @ 6"	416 @ 6"	417 @ 6"	509 @ 6"	510 @ 6"			
BAR D	511 @ 12"	419 @ 6"	419 @ 6"	419 @ 6"	419 @ 6"			
BAR E	414 @ 12"	414 @ 12"	415 @ 12"	415 @ 12"	416 @ 12"			
BAR F	414 @ 12"	414 @ 12"	415 @ 12"	415 @ 12"	416 @ 12"			
BAR G IN 2 SLABS	54 - 401	54 - 401	60 - 401	60 - 401	60 - 401			
BAR H IN 4 WALLS	26 - 402	26 - 402	26 - 402	26 - 402	26 - 402			
BAR J IN EXT. CORNER	0	0	2-403B @ 5"	3-403B @ 5"	3-406B @ 5 3/4"			
BAR J IN INT. CORNER	0	2-401B @ 4 1/2"	3-403B @ 5"	4-404B @ 5"	4-407B @ 5 3/4"			
T_1	8"	8"	9"	9"	10"			
T_2	9"	9"	10"	10"	11"			
T_3	8"	8"	9"	9"	10"			
X	18'-4"	18'-4"	18'-6"	18'-6"	18'-8"			
Y	6'-5"	6'-5"	6'-7"	6'-7"	6'-9"			
YD^3 CLASS AA CONCRETE/FT	1.607	1.607	1.761	1.761	1.917			
LB BAR REINF STEEL/FT	188.4	210.9	235.4	284.9	289.7			
PARAPET, BARREL END, AND TOEWALL QUANTITIES - 90° SKEW - TOTAL								
YD^3 CLASS AA CONCRETE	7.7	7.7	7.9	7.9	8.0			
LB BAR REINF STEEL	1109	1109	1168	1168	1167			
PARAPET, BARREL END, AND TOEWALL QUANTITIES - 75° SKEW - TOTAL								
YD^3 CLASS AA CONCRETE	8.0	8.0	8.2	8.2	8.3			
LB BAR REINF STEEL	1376	1376	1437	1437	1439			
PARAPET, BARREL END, AND TOEWALL QUANTITIES - 60° SKEW - TOTAL								
YD^3 CLASS AA CONCRETE	8.9	8.9	9.1	9.1	9.3			
LB BAR REINF STEEL	1458	1458	1520	1520	1522			
PARAPET, BARREL END, AND TOEWALL QUANTITIES - 45° SKEW - TOTAL								
YD^3 CLASS AA CONCRETE	11.0	11.0	11.2	11.2	11.4			
LB BAR REINF STEEL	1657	1657	1720	1720	1724			

TRIPLE 5'-0" X 6'-0" BOX CULVERT

BARREL REINFORCEMENT QUANTITIES AND DIMENSIONS

DESIGN	1	2	3	4	5	6	7	8
BAR A	528A @ 12"	438A @ 6"	439A @ 6"	519A @ 6"	523A@ 6"			
BAR B	465 @ 6"	450 @ 6"	451@ 6"	539 @ 6"	538 @ 6"			
BAR C	416 @ 6"	416 @ 6"	509 @ 6"	509 @ 6"	510 @ 6"			
BAR D	419 @ 6"	419 @ 6"	419 @ 6"	419 @ 6"	511@ 6"			
BAR E	421@ 12"	512 @ 12"	513 @ 12"	513 @ 12"	514 @ 12"			
BAR F	421@ 12"	421@ 12"	422 @ 12"	422 @ 12"	423 @ 12"			
BAR G IN 2 SLABS	54-401	54-401	60-401	60-401	60-401			
BAR H IN 4 WALLS	34-402	34-402	34-402	34-402	34-402			
BAR J IN EXT. CORNER	0	0	2-403B @ 5"	4-404B @ 5"	4-407B @ 5 3/4"			
BAR J IN INT. CORNER	0	2-401B @ 4 1/2"	3-403B @ 5"	4-404B @ 5"	4-407B @ 5 3/4"			
T_1	8"	8"	9"	9"	10"			
T_2	9"	9"	10"	10"	11"			
T_3	8"	8"	9"	9"	10"			
X	18'-4"	18'-4"	18'-6"	18'-6"	18'-8"			
Y	7'-5"	7'-5"	7'-7"	7'-7"	7'-9"			
YD^3 CLASS AA CONCRETE/FT	1.730	1.730	1.890	1.890	2.052			
LB BAR REINF STEEL/FT	209.7	230.8	274.7	332.4	348.3			
PARAPET, BARREL END, AND TOEWALL QUANTITIES - 90° SKEW - TOTAL								
YD^3 CLASS AA CONCRETE	8.0	8.0	8.1	8.1	8.3			
LB BAR REINF STEEL	1161	1161	1219	1219	1219			
PARAPET, BARREL END, AND TOEWALL QUANTITIES - 75° SKEW - TOTAL								
YD^3 CLASS AA CONCRETE	8.3	8.3	8.4	8.4	8.6			
LB BAR REINF STEEL	1430	1430	1491	1491	1493			
PARAPET, BARREL END, AND TOEWALL QUANTITIES - 60° SKEW - TOTAL								
YD^3 CLASS AA CONCRETE	9.2	9.2	9.4	9.4	9.6			
LB BAR REINF STEEL	1513	1513	1575	1575	1577			
PARAPET, BARREL END, AND TOEWALL QUANTITIES - 45° SKEW - TOTAL								
YD^3 CLASS AA CONCRETE	11.4	11.4	11.6	11.6	11.8			
LB BAR REINF STEEL	1715	1715	1778	1778	1782			

TRIPLE 5'-0" X 7'-0" BOX CULVERT

BARREL REINFORCEMENT QUANTITIES AND DIMENSIONS

DESIGN	1	2	3	4	5	6	7	8
BAR A	550A @ 12"	454A @ 6"	457A @ 6"	537A @ 6"	540A @ 6"			
BAR B	465 @ 6"	445 @ 6"	446 @ 6"	537 @ 6"	538 @ 6"			
BAR C	416 @ 6"	416 @ 6"	509 @ 6"	509 @ 6"	510 @ 6"			
BAR D	419 @ 6"	419 @ 6"	419 @ 6"	419 @ 6"	511@ 6"			
BAR E	518 @ 12"	518 @ 12"	519 @ 12"	429 @ 6"	602 @ 12"			
BAR F	428 @ 12"	428 @ 12"	429 @ 12"	429 @ 12"	430 @ 12"			
BAR G IN 2 SLABS	54 - 401	54 - 401	60 - 401	60 - 401	60 - 401			
BAR H IN 4 WALLS	40 - 402	40 - 402	40 - 402	40 - 402	40 - 402			
BAR J IN EXT. CORNER	0	0	3-403B @ 5"	4-404B @ 5"	4-407B @ 5 3/4"			
BAR J IN INT. CORNER	0	2-401B @ 4 1/2"	3-403B @ 5"	4-404B @ 5"	4-407B @ 5 3/4"			
T_1	8"	8"	9"	9"	10"			
T_2	9"	9"	10"	10"	11"			
T_3	8"	8"	9"	9"	10"			
X	18'-4"	18'-4"	18'-6"	18'-6"	18'-8"			
Y	8'-5"	8'-5"	8'-7"	8'-7"	8'-9"			
YD^3 CLASS AA CONCRETE/FT	1.854	1.854	2.020	2.020	2.188			
LB BAR REINF STEEL/FT	231.4	244.9	293.9	356.4	375.2			
PARAPET, BARREL END, AND TOEWALL QUANTITIES - 90° SKEW - TOTAL								
YD^3 CLASS AA CONCRETE	8.3	8.3	8.4	8.4	8.6			
LB BAR REINF STEEL	1190	1190	1249	1249	1248			
PARAPET, BARREL END, AND TOEWALL QUANTITIES - 75° SKEW - TOTAL								
YD^3 CLASS AA CONCRETE	8.6	8.6	8.8	8.8	9.0			
LB BAR REINF STEEL	1461	1461	1522	1522	1524			
PARAPET, BARREL END, AND TOEWALL QUANTITIES - 60° SKEW - TOTAL								
YD^3 CLASS AA CONCRETE	9.6	9.6	9.8	9.8	10.0			
LB BAR REINF STEEL	1545	1545	1607	1607	1609			
PARAPET, BARREL END, AND TOEWALL QUANTITIES - 45° SKEW - TOTAL								
YD^3 CLASS AA CONCRETE	11.8	11.8	12.0	12.0	12.3			
LB BAR REINF STEEL	1749	1749	1812	1812	1816			

TRIPLE 5'-0" X 8'-0" BOX CULVERT

BARREL REINFORCEMENT QUANTITIES AND DIMENSIONS

DESIGN	1	2	3	4	5	6	7	8
BAR A	563A @ 12"	551A @ 6"	556A @ 6"	604A @ 6"	605A @ 6"			
BAR B	465 @ 6"	447 @ 6"	536 @ 6"	539 @ 6"	607 @ 6"			
BAR C	416 @ 6"	416 @ 6"	417 @ 6"	509 @ 6"	510 @ 6"			
BAR D	419 @ 6"	419 @ 6"	419 @ 6"	511@ 6"	511@ 6"			
BAR E	527 @ 12"	437 @ 6"	704 @ 12"	528 @ 6"	529 @ 6"			
BAR F	437 @ 12"	437 @ 12"	439 @ 12"	439 @ 12"	440 @ 12"			
BAR G IN 2 SLABS	54 - 401	54 - 401	60 - 401	54 - 401	60 - 401			
BAR H IN 4 WALLS	42 - 402	42 - 402	42 - 402	42 - 402	42 - 402			
BAR J IN EXT. CORNER	0	2-402B @ 4 1/2"	3-404B @ 5"	4-405B @ 5"	4-408B @ 5 3/4"			
BAR J IN INT. CORNER	0	2-401B @ 4 1/2"	3-404B @ 5"	4-404B @ 5"	4-408B @ 5 3/4"			
T_1	8"	8"	9"	9"	10"			
T_2	9"	9"	10"	10"	11"			
T_3	8"	8"	9"	9"	10"			
X	18'-4"	18'-4"	18'-6"	18'-6"	18'-8"			
Y	9'-5"	9'-5"	9'-7"	9'-7"	9'-9"			
YD^3 CLASS AA CONCRETE/FT	1.977	1.977	2.150	2.150	2.324			
LB BAR REINF STEEL/FT	240.9	304.9	353.7	435.9	464.6			
PARAPET, BARREL END, AND TOEWALL QUANTITIES - 90° SKEW - TOTAL								
YD^3 CLASS AA CONCRETE	8.6	8.6	8.8	8.8	9.0			
LB BAR REINF STEEL	1217	1217	1276	1217	1276			
PARAPET, BARREL END, AND TOEWALL QUANTITIES - 75° SKEW - TOTAL								
YD^3 CLASS AA CONCRETE	9.0	9.0	9.2	9.2	9.4			
LB BAR REINF STEEL	1488	1488	1550	1491	1551			
PARAPET, BARREL END, AND TOEWALL QUANTITIES - 60° SKEW - TOTAL								
YD^3 CLASS AA CONCRETE	10.0	10.0	10.2	10.2	10.4			
LB BAR REINF STEEL	1573	1573	1635	1576	1637			
PARAPET, BARREL END, AND TOEWALL QUANTITIES - 45° SKEW - TOTAL								
YD^3 CLASS AA CONCRETE	12.3	12.3	12.6	12.6	12.8			
LB BAR REINF STEEL	1778	1778	1841	1782	1845			

DEPARTMENT OF TRANSPORTATION
STATE OF GEORGIA

STANDARD

REINFORCED CONCRETE TRIPLE BOX CULVERT 5'X5', 5'X6', 5'X7' AND 5'X8'

NO SCALE — SEPTEMBER 2017

DATE | REVISION | BY

DES. YSK
DRW. FGS
TRA. ____
CHK. JWB

(SUBMITTED) STATE DESIGN POLICY ENGINEER
(APPROVED) Margaret B Pirkle CHIEF ENGINEER

NUMBER 2403
SHEET 2C OF 3

STATE	PROJECT NUMBER	SHEET NO.	TOTAL SHEETS
GA.			

TRIPLE 6'-0" X 3'-0" BOX CULVERT

BARREL REINFORCEMENT QUANTITIES AND DIMENSIONS

DESIGN	1	2	3	4	5	6	7	8
BAR A	409A @ 6"	406A @ 6"	407A @ 6"	410A @ 6"	503A @ 6"			
BAR B	468 @ 6"	572 @ 6"	573 @ 6"	568 @ 6"	618 @ 6"			
BAR C	423 @ 6"	424 @ 6"	515 @ 6"	516 @ 6"	601 @ 6"			
BAR D	426 @ 6"	426 @ 6"	426 @ 6"	426 @ 6"	702 @ 12"			
BAR E	403 @ 12"	404 @ 12"	405 @ 12"	406 @ 12"	407 @ 12"			
BAR F	501 @ 12"	404 @ 12"	405 @ 12"	406 @ 12"	407 @ 12"			
BAR G IN 2 SLABS	66 - 401	66 - 401	66 - 401	66 - 401	72 - 401			
BAR H IN 4 WALLS	18 - 402	18 - 402	18 - 402	18 - 402	18 - 402			
BAR J IN EXT. CORNER	0	0	0	3-409B @ 6½"	3-413B @ 7"			
BAR J IN INT. CORNER	0	3-404B @ 5"	3-407B @ 5¾"	4-410B @ 6½"	4-414B @ 7"			
T_1	8"	9"	10"	11"	12"			
T_2	9"	10"	11"	12"	13"			
T_3	8"	9"	10"	11"	12"			
X	21'-4"	21'-6"	21'-8"	21'-10"	22'-0"			
Y	4'-5"	4'-7"	4'-9"	4'-11"	5'-1"			
YD^3 CLASS AA CONCRETE/FT	1.517	1.677	1.840	2.004	2.170			
LB BAR REINF STEEL/FT	200.2	245.0	270.7	297.8	387.7			
PARAPET, BARREL END, AND TOEWALL QUANTITIES - 90° SKEW - TOTAL								
YD^3 CLASS AA CONCRETE	7.5	7.7	7.8	7.9	8.1			
LB BAR REINF STEEL	1221	1220	1220	1219	1273			
PARAPET, BARREL END, AND TOEWALL QUANTITIES - 75° SKEW - TOTAL								
YD^3 CLASS AA CONCRETE	7.9	8.0	8.1	8.3	8.4			
LB BAR REINF STEEL	1525	1527	1529	1530	1587			
PARAPET, BARREL END, AND TOEWALL QUANTITIES - 60° SKEW - TOTAL								
YD^3 CLASS AA CONCRETE	8.8	8.9	9.1	9.2	9.4			
LB BAR REINF STEEL	1618	1620	1622	1625	1682			
PARAPET, BARREL END, AND TOEWALL QUANTITIES - 45° SKEW - TOTAL								
YD^3 CLASS AA CONCRETE	10.8	11.0	11.2	11.3	11.5			
LB BAR REINF STEEL	1840	1844	1848	1851	1910			

TRIPLE 6'-0" X 4'-0" BOX CULVERT

BARREL REINFORCEMENT QUANTITIES AND DIMENSIONS

DESIGN	1	2	3	4	5	6	7	8
BAR A	416A @ 6"	413A @ 6"	415A @ 6"	418A @ 6"	506A @ 6"			
BAR B	470 @ 6"	572 @ 6"	571@ 6"	568 @ 6"	618 @ 6"			
BAR C	423 @ 6"	424 @ 6"	515 @ 6"	516 @ 6"	601@ 6"			
BAR D	426 @ 6"	426 @ 6"	426 @ 6"	426 @ 6"	702 @ 12"			
BAR E	408 @ 12"	409 @ 12"	410 @ 12"	411@ 12"	412 @ 12"			
BAR F	502 @ 12"	409 @ 12"	410 @ 12"	411@ 12"	412 @ 12"			
BAR G IN 2 SLABS	66 - 401	66 - 401	66 - 401	66 - 401	72 - 401			
BAR H IN 4 WALLS	24 - 402	24 - 402	24 - 402	24 - 402	24 - 402			
BAR J IN EXT. CORNER	0	0	0	3-409B @ 6½"	3-413B @ 7"			
BAR J IN INT. CORNER	0	3-404B @ 5"	4-407B @ 5¾"	4-410B @ 6½"	4-414B @ 7"			
T_1	8"	9"	10"	11"	12"			
T_2	9"	10"	11"	12"	13"			
T_3	8"	9"	10"	11"	12"			
X	21'-4"	21'-6"	21'-8"	21'-10"	22'-0"			
Y	5'-5"	5'-7"	5'-9"	5'-11"	6'-1"			
YD^3 CLASS AA CONCRETE/FT	1.641	1.807	1.975	2.146	2.318			
LB BAR REINF STEEL/FT	215.0	258.3	293.1	311.2	404.1			
PARAPET, BARREL END, AND TOEWALL QUANTITIES - 90° SKEW - TOTAL								
YD^3 CLASS AA CONCRETE	8.5	8.7	8.8	9.0	9.1			
LB BAR REINF STEEL	1268	1268	1267	1267	1323			
PARAPET, BARREL END, AND TOEWALL QUANTITIES - 75° SKEW - TOTAL								
YD^3 CLASS AA CONCRETE	8.9	9.0	9.2	9.3	9.5			
LB BAR REINF STEEL	1575	1576	1578	1580	1638			
PARAPET, BARREL END, AND TOEWALL QUANTITIES - 60° SKEW - TOTAL								
YD^3 CLASS AA CONCRETE	9.9	10.1	10.2	10.4	10.6			
LB BAR REINF STEEL	1668	1670	1673	1675	1734			
PARAPET, BARREL END, AND TOEWALL QUANTITIES - 45° SKEW - TOTAL								
YD^3 CLASS AA CONCRETE	12.2	12.4	12.6	12.8	13.0			
LB BAR REINF STEEL	1892	1896	1900	1904	1964			

DEPARTMENT OF TRANSPORTATION
STATE OF GEORGIA

STANDARD

REINFORCED CONCRETE TRIPLE BOX CULVERT 6'X3' AND 6'X4'

NO SCALE — SEPTEMBER 2017

DATE / REVISION / BY

DES. YSK
DRW. FGS
TRA. ___
CHK. JWB

(SUBMITTED) STATE DESIGN POLICY ENGINEER
(APPROVED) Margaret B Pirkle CHIEF ENGINEER

NUMBER 2403
SHEET 2D OF 3

STATE	PROJECT NUMBER	SHEET NO.	TOTAL SHEETS
GA.			

TRIPLE 6'-0" X 5'-0" BOX CULVERT

BARREL REINFORCEMENT QUANTITIES AND DIMENSIONS

DESIGN	1	2	3	4	5	6	7	8
BAR A	429A @ 6"	424A @ 6"	425A @ 6"	433A @ 6"	512A @ 6"			
BAR B	469 @ 6"	569 @ 6"	570 @ 6"	567 @ 6"	618 @ 6"			
BAR C	701 @ 12"	424 @ 6"	515 @ 6"	516 @ 6"	601 @ 6"			
BAR D	426 @ 6"	426 @ 6"	426 @ 6"	426 @ 6"	702 @ 12"			
BAR E	414 @ 12"	415 @ 12"	416 @ 12"	418 @ 12"	419 @ 12"			
BAR F	507 @ 12"	415 @ 12"	416 @ 12"	418 @ 12"	419 @ 12"			
BAR G IN 2 SLABS	66 - 401	66 - 401	66 - 401	66 - 401	72 - 401			
BAR H IN 4 WALLS	26 - 402	26 - 402	26 - 402	26 - 402	26 - 402			
BAR J IN EXT. CORNER	0	0	0	3-409B @ 6½"	3-413B @ 7"			
BAR J IN INT. CORNER	0	3-404B @ 5"	4-407B @ 5¾"	4-410B @ 6½"	4-414B @ 7"			
T_1	8"	9"	10"	11"	12"			
T_2	9"	10"	11"	12"	13"			
T_3	8"	9"	10"	11"	12"			
X	2'-4"	2'-6"	2'-8"	2'-10"	2'-0"			
Y	6'-5"	6'-7"	6'-9"	6'-11"	7'-1"			
YD^3 CLASS AA CONCRETE/FT	1.764	1.937	2.111	2.288	2.466			
LB BAR REINF STEEL/FT	248.6	268.5	303.9	321.6	417.7			
PARAPET, BARREL END, AND TOEWALL QUANTITIES - 90° SKEW - TOTAL								
YD^3 CLASS AA CONCRETE	8.8	8.9	9.1	9.2	9.4			
LB BAR REINF STEEL	1292	1292	1291	1291	1347			
PARAPET, BARREL END, AND TOEWALL QUANTITIES - 75° SKEW - TOTAL								
YD^3 CLASS AA CONCRETE	9.1	9.3	9.4	9.6	9.8			
LB BAR REINF STEEL	1599	1601	1603	1604	1663			
PARAPET, BARREL END, AND TOEWALL QUANTITIES - 60° SKEW - TOTAL								
YD^3 CLASS AA CONCRETE	10.2	10.4	10.5	10.7	10.9			
LB BAR REINF STEEL	1693	1695	1698	1700	1759			
PARAPET, BARREL END, AND TOEWALL QUANTITIES - 45° SKEW - TOTAL								
YD^3 CLASS AA CONCRETE	12.5	12.7	13.0	13.2	13.4			
LB BAR REINF STEEL	1918	1922	1926	1929	1990			

TRIPLE 6'-0" X 6'-0" BOX CULVERT

BARREL REINFORCEMENT QUANTITIES AND DIMENSIONS

DESIGN	1	2	3	4	5	6	7	8
BAR A	447A @ 6"	439A @ 6"	443A @ 6"	702A @ 12"	526A @ 6"			
BAR B	472 @ 6"	566 @ 6"	564 @ 6"	560 @ 6"	616 @ 6"			
BAR C	701 @ 12"	424 @ 6"	515 @ 6"	516 @ 6"	601 @ 6"			
BAR D	426 @ 6"	426 @ 6"	426 @ 6"	426 @ 6"	517 @ 6"			
BAR E	421 @ 12"	422 @ 12"	423 @ 12"	515 @ 12"	517 @ 12"			
BAR F	512 @ 12"	422 @ 12"	423 @ 12"	425 @ 12"	426 @ 12"			
BAR G IN 2 SLABS	66 - 401	66 - 401	66 - 401	66 - 401	72 - 401			
BAR H IN 4 WALLS	34 - 402	34 - 402	34 - 402	34 - 402	34 - 402			
BAR J IN EXT. CORNER	0	0	2-406B @ 5¾"	3-412B @ 6½"	3-413B @ 7"			
BAR J IN INT. CORNER	0	3-404B @ 5"	4-407B @ 5¾"	4-410B @ 6½"	4-414B @ 7"			
T_1	8"	9"	10"	11"	12"			
T_2	9"	10"	11"	12"	13"			
T_3	8"	9"	10"	11"	12"			
X	2'-4"	2'-6"	2'-8"	2'-10"	2'-0"			
Y	7'-5"	7'-7"	7'-9"	7'-11"	8'-1"			
YD^3 CLASS AA CONCRETE/FT	1.888	2.066	2.247	2.430	2.614			
LB BAR REINF STEEL/FT	268.4	282.7	326.8	364.9	441.2			
PARAPET, BARREL END, AND TOEWALL QUANTITIES - 90° SKEW - TOTAL								
YD^3 CLASS AA CONCRETE	9.0	9.2	9.4	9.5	9.7			
LB BAR REINF STEEL	1344	1344	1343	1343	1399			
PARAPET, BARREL END, AND TOEWALL QUANTITIES - 75° SKEW - TOTAL								
YD^3 CLASS AA CONCRETE	9.4	9.5	9.7	9.9	10.1			
LB BAR REINF STEEL	1653	1655	1656	1658	1716			
PARAPET, BARREL END, AND TOEWALL QUANTITIES - 60° SKEW - TOTAL								
YD^3 CLASS AA CONCRETE	10.5	10.7	10.8	11.0	11.3			
LB BAR REINF STEEL	1748	1750	1753	1755	1814			
PARAPET, BARREL END, AND TOEWALL QUANTITIES - 45° SKEW - TOTAL								
YD^3 CLASS AA CONCRETE	12.9	13.1	13.3	13.6	13.8			
LB BAR REINF STEEL	1976	1980	1983	1987	2048			

TRIPLE 6'-0" X 7'-0" BOX CULVERT

BARREL REINFORCEMENT QUANTITIES AND DIMENSIONS

DESIGN	1	2	3	4	5	6	7	8
BAR A	463A @ 6"	453A @ 6"	536A @ 6"	539A @ 6"	544A @ 6"			
BAR B	475 @ 6"	563 @ 6"	562 @ 6"	561 @ 6"	615 @ 6"			
BAR C	514 @ 6"	424 @ 6"	515 @ 6"	516 @ 6"	601 @ 6"			
BAR D	426 @ 6"	426 @ 6"	426 @ 6"	426 @ 6"	517 @ 6"			
BAR E	428 @ 12"	519 @ 12"	520 @ 12"	522 @ 12"	524 @ 12			
BAR F	518 @ 12"	429 @ 12"	430 @ 12"	431 @ 12"	433 @ 12"			
BAR G IN 2 SLABS	66 - 401	66 - 401	66 - 401	66 - 401	72 - 401			
BAR H IN 4 WALLS	40 - 402	40 - 402	40 - 402	40 - 402	40 - 402			
BAR J IN EXT. CORNER	0	0	3-407B @ 5¾"	3-410B @ 6½"	3-413B @ 7"			
BAR J IN INT. CORNER	2-401B @ 4½"	3-404B @ 5"	4-407B @ 5¾"	4-410B @ 6½"	4-414B @ 7"			
T_1	8"	9"	10"	11"	12"			
T_2	9"	10"	11"	12"	13"			
T_3	8"	9"	10"	11"	12"			
X	2'-4"	2'-6"	2'-8"	2'-10"	2'-0"			
Y	8'-5"	8'-7"	8'-9"	8'-11"	9'-1"			
YD^3 CLASS AA CONCRETE/FT	2.011	2.196	2.383	2.572	2.762			
LB BAR REINF STEEL/FT	306.1	301.1	378.4	383.3	457.1			
PARAPET, BARREL END, AND TOEWALL QUANTITIES - 90° SKEW - TOTAL								
YD^3 CLASS AA CONCRETE	9.3	9.5	9.7	9.9	10.1			
LB BAR REINF STEEL	1374	1373	1373	1372	1428			
PARAPET, BARREL END, AND TOEWALL QUANTITIES - 75° SKEW - TOTAL								
YD^3 CLASS AA CONCRETE	9.7	9.9	10.1	10.3	10.5			
LB BAR REINF STEEL	1684	1686	1687	1689	1748			
PARAPET, BARREL END, AND TOEWALL QUANTITIES - 60° SKEW - TOTAL								
YD^3 CLASS AA CONCRETE	10.8	11.0	11.2	11.5	11.7			
LB BAR REINF STEEL	1780	1782	1785	1787	1846			
PARAPET, BARREL END, AND TOEWALL QUANTITIES - 45° SKEW - TOTAL								
YD^3 CLASS AA CONCRETE	13.3	13.6	13.8	14.1	14.4			
LB BAR REINF STEEL	2010	2014	2018	2021	2082			

TRIPLE 6'-0" X 8'-0" BOX CULVERT

BARREL REINFORCEMENT QUANTITIES AND DIMENSIONS

DESIGN	1	2	3	4	5	6	7	8
BAR A	466A @ 6"	468A @ 6"	555A @ 6"	558A @ 6"	561A @ 6"			
BAR B	477 @ 6"	557 @ 6"	558 @ 6"	558 @ 6"	614 @ 6"			
BAR C	514 @ 6"	424 @ 6"	515 @ 6"	516 @ 6"	601 @ 6"			
BAR D	426 @ 6"	426 @ 6"	426 @ 6"	517 @ 6"	517 @ 6"			
BAR E	527 @ 12"	528 @ 12"	440 @ 6"	441 @ 6"	705 @ 12"			
BAR F	527 @ 12"	439 @ 12"	440 @ 12"	441 @ 12"	442 @ 12"			
BAR G IN 2 SLABS	66 - 401	66 - 401	66 - 401	66 - 401	72 - 401			
BAR H IN 4 WALLS	42 - 402	42 - 402	42 - 402	42 - 402	42 - 402			
BAR J IN EXT. CORNER	0	0	3-407B @ 5¾"	3-410B @ 6½"	4-413B @ 7"			
BAR J IN INT. CORNER	2-401B @ 4½"	3-404B @ 5"	4-407B @ 5¾"	4-410B @ 6½"	4-414B @ 7"			
T_1	8"	9"	10"	11"	12"			
T_2	9"	10"	11"	12"	13"			
T_3	8"	9"	10"	11"	12"			
X	2'-4"	2'-6"	2'-8"	2'-10"	2'-0"			
Y	9'-5"	9'-7"	9'-9"	9'-11"	10'-1"			
YD^3 CLASS AA CONCRETE/FT	2.135	2.326	2.519	2.713	2.910			
LB BAR REINF STEEL/FT	324.1	311.1	397.9	414.8	494.8			
PARAPET, BARREL END, AND TOEWALL QUANTITIES - 90° SKEW - TOTAL								
YD^3 CLASS AA CONCRETE	9.7	9.9	10.1	10.3	10.5			
LB BAR REINF STEEL	1401	1401	1400	1400	1456			
PARAPET, BARREL END, AND TOEWALL QUANTITIES - 75° SKEW - TOTAL								
YD^3 CLASS AA CONCRETE	10.1	10.3	10.5	10.7	10.9			
LB BAR REINF STEEL	1712	1714	1716	1717	1776			
PARAPET, BARREL END, AND TOEWALL QUANTITIES - 60° SKEW - TOTAL								
YD^3 CLASS AA CONCRETE	11.3	11.5	11.7	11.9	12.2			
LB BAR REINF STEEL	1809	1811	1813	1816	1875			
PARAPET, BARREL END, AND TOEWALL QUANTITIES - 45° SKEW - TOTAL								
YD^3 CLASS AA CONCRETE	13.8	14.1	14.4	14.7	15.0			
LB BAR REINF STEEL	2039	2043	2047	2051	2112			

DEPARTMENT OF TRANSPORTATION
STATE OF GEORGIA

STANDARD

REINFORCED CONCRETE TRIPLE BOX CULVERT 6'X5', 6'X6', 6'X7' AND 6'X8'

NO SCALE — SEPTEMBER 2017

BY	REVISION	DATE

DES. YSK
DRW. FGS
TRA. ___
CHK. JWB

(SUBMITTED) STATE DESIGN POLICY ENGINEER

(APPROVED) Margaret B Pirkle CHIEF ENGINEER

NUMBER 2403

SHEET 2E OF 3

STATE	PROJECT NUMBER	SHEET NO.	TOTAL SHEETS
GA.			

TRIPLE 7′-0″ X 4′-0″ BOX CULVERT

BARREL REINFORCEMENT QUANTITIES AND DIMENSIONS

DESIGN	1	2	3	4	5	6	7	8
BAR A	419A @ 6″	417A @ 6″	420A @ 6″	506A @ 6″	507A @ 6″			
BAR B	479 @ 6″	579 @ 6″	626 @ 6″	626 @ 6″	625 @ 6″			
BAR C	703 @ 12″	522 @ 6″	523 @ 6″	603 @ 6″	604 @ 6″			
BAR D	433 @ 6″	433 @ 6″	433 @ 6″	524 @ 6″	524 @ 6″			
BAR E	409 @ 12″	410 @ 12″	411@ 12″	412 @ 12″	413 @ 12″			
BAR F	503 @ 12″	410 @ 12″	411@ 12″	412 @ 12″	413 @ 12″			
BAR G IN 2 SLABS	72 - 401	72 - 401	72 - 401	72 - 401	72 - 401			
BAR H IN 4 WALLS	24 - 402	24 - 402	24 - 402	24 - 402	24 - 402			
BAR J IN EXT. CORNER	0	0	3-409B @ 6¼″	3-413B @ 7″	3-415B @ 7¾″			
BAR J IN INT. CORNER	0	3-407B @ 5¾″	4-411B @ 6¼″	4-414B @ 7″	5-416B @ 7¾″			
T_1	9″	10″	11″	12″	13″			
T_2	10″	11″	12″	13″	14″			
T_3	9″	10″	11″	12″	13″			
X	24′-6″	24′-8″	24′-10″	25′-0″	25′-2″			
Y	5′-7″	5′-9″	5′-11″	6′-1″	6′-3″			
YD^3 CLASS AA CONCRETE/FT	1.983	2.170	2.359	2.549	2.742			
LB BAR REINF STEEL/FT	261.2	311.1	370.1	438.4	454.4			
PARAPET, BARREL END, AND TOEWALL QUANTITIES - 90° SKEW - TOTAL								
YD^3 CLASS AA CONCRETE	9.7	9.9	10.0	10.2	10.4			
LB BAR REINF STEEL	1390	1388	1387	1386	1385			
PARAPET, BARREL END, AND TOEWALL QUANTITIES - 75° SKEW - TOTAL								
YD^3 CLASS AA CONCRETE	10.1	10.3	10.4	10.6	10.8			
LB BAR REINF STEEL	1738	1739	1740	1741	1742			
PARAPET, BARREL END, AND TOEWALL QUANTITIES - 60° SKEW - TOTAL								
YD^3 CLASS AA CONCRETE	11.3	11.5	11.6	11.8	12.0			
LB BAR REINF STEEL	1844	1845	1847	1849	1850			
PARAPET, BARREL END, AND TOEWALL QUANTITIES - 45° SKEW - TOTAL								
YD^3 CLASS AA CONCRETE	13.9	14.1	14.3	14.5	14.8			
LB BAR REINF STEEL	2095	2098	2101	2104	2107			

BY	REVISION	DATE

DEPARTMENT OF TRANSPORTATION
STATE OF GEORGIA

STANDARD

REINFORCED CONCRETE
TRIPLE BOX CULVERT
7′X4′

NO SCALE — SEPTEMBER 2017

DES. YSK
DRW. EGS
TRA. ____
CHK. JWB

(SUBMITTED) STATE DESIGN POLICY ENGINEER

(APPROVED) Margaret B Pitts
CHIEF ENGINEER

NUMBER 2403

SHEET 2F OF 3

STATE	PROJECT NUMBER	SHEET NO.	TOTAL SHEETS
GA.			

TRIPLE 7'-0" X 5'-0" BOX CULVERT

BARREL REINFORCEMENT QUANTITIES AND DIMENSIONS

DESIGN	1	2	3	4	5	6	7	8
BAR A	431A @ 6"	428A @ 6"	433A @ 6"	512A @ 6"	515A @ 6"			
BAR B	479 @ 6"	578 @ 6"	626 @ 6"	626 @ 6"	625 @ 6"			
BAR C	703 @ 12"	522 @ 6"	523 @ 6"	603 @ 6"	604 @ 6"			
BAR D	433 @ 6"	433 @ 6"	433 @ 6"	524 @ 6"	524 @ 6"			
BAR E	415 @ 12"	416 @ 12"	418 @ 12"	419 @ 12"	420 @ 12"			
BAR F	508 @ 12"	416 @ 12"	418 @ 12"	419 @ 12"	420 @ 12"			
BAR G IN 2 SLABS	72 - 401	72 - 401	72 - 401	72 - 401	72 - 401			
BAR H IN 4 WALLS	26 - 402	26 - 402	26 - 402	26 - 402	26 - 402			
BAR J IN EXT. CORNER	0	0	3-409B @ 6¼"	3-413B @ 7"	3-415B @ 7¾"			
BAR J IN INT. CORNER	0	3-407B @ 5¾"	4-411B @ 6¼"	4-414B @ 7"	5-416B @ 7¾"			
T_1	9"	10"	11"	12"	13"			
T_2	10"	11"	12"	13"	14"			
T_3	9"	10"	11"	12"	13"			
X	24'-6"	24'-8"	24'-10"	25'-0"	25'-2"			
Y	6'-7"	6'-9"	6'-11"	7'-1"	7'-3"			
YD^3 CLASS AA CONCRETE/FT	2.113	2.306	2.501	2.698	2.897			
LB BAR REINF STEEL/FT	273.3	321.6	380.8	452.1	468.1			
PARAPET, BARREL END, AND TOEWALL QUANTITIES - 90° SKEW - TOTAL								
YD^3 CLASS AA CONCRETE	10.0	10.2	10.3	10.5	10.7			
LB BAR REINF STEEL	1414	1412	1411	1410	1409			
PARAPET, BARREL END, AND TOEWALL QUANTITIES - 75° SKEW - TOTAL								
YD^3 CLASS AA CONCRETE	10.4	10.6	10.7	10.9	11.1			
LB BAR REINF STEEL	1762	1763	1764	1765	1766			
PARAPET, BARREL END, AND TOEWALL QUANTITIES - 60° SKEW - TOTAL								
YD^3 CLASS AA CONCRETE	11.6	11.8	12.0	12.2	12.4			
LB BAR REINF STEEL	1868	1870	1872	1874	1875			
PARAPET, BARREL END, AND TOEWALL QUANTITIES - 45° SKEW - TOTAL								
YD^3 CLASS AA CONCRETE	14.2	14.5	14.7	15.0	15.2			
LB BAR REINF STEEL	2121	2124	2127	2130	2133			

TRIPLE 7'-0" X 6'-0" BOX CULVERT

BARREL REINFORCEMENT QUANTITIES AND DIMENSIONS

DESIGN	1	2	3	4	5	6	7	8
BAR A	448A @ 6"	442A @ 6"	446A @ 6"	526A @ 6"	535A @ 6"			
BAR B	478 @ 6"	576 @ 6"	624 @ 6"	624 @ 6"	619 @ 6"			
BAR C	703 @ 12"	522 @ 6"	523 @ 6"	603 @ 6"	604 @ 6"			
BAR D	433 @ 6"	433 @ 6"	433 @ 6"	524 @ 6"	524 @ 6"			
BAR E	422 @ 12"	423 @ 12"	425 @ 12"	426 @ 12"	427 @ 12"			
BAR F	513 @ 12"	423 @ 12"	425 @ 12"	426 @ 12"	427 @ 12"			
BAR G IN 2 SLABS	72 - 401	72 - 401	72 - 401	72 - 401	72 - 401			
BAR H IN 4 WALLS	34 - 402	34 - 402	34 - 402	34 - 402	34 - 402			
BAR J IN EXT. CORNER	0	0	3-409B @ 6¼"	3-413B @ 7"	4-415B @ 7¾"			
BAR J IN INT. CORNER	0	3-407B @ 5¾"	4-411B @ 6¼"	4-414B @ 7"	5-416B @ 7¾"			
T_1	9"	10"	11"	12"	13"			
T_2	10"	11"	12"	13"	14"			
T_3	9"	10"	11"	12"	13"			
X	24'-6"	24'-8"	24'-10"	25'-0"	25'-2"			
Y	7'-7"	7'-9"	7'-11"	8'-1"	8'-3"			
YD^3 CLASS AA CONCRETE/FT	2.242	2.441	2.642	2.846	3.051			
LB BAR REINF STEEL/FT	290.0	335.8	394.4	469.2	488.2			
PARAPET, BARREL END, AND TOEWALL QUANTITIES - 90° SKEW - TOTAL								
YD^3 CLASS AA CONCRETE	10.3	10.4	10.6	10.8	11.0			
LB BAR REINF STEEL	1465	1464	1463	1462	1461			
PARAPET, BARREL END, AND TOEWALL QUANTITIES - 75° SKEW - TOTAL								
YD^3 CLASS AA CONCRETE	10.7	10.8	11.0	11.2	11.4			
LB BAR REINF STEEL	1816	1817	1818	1819	1820			
PARAPET, BARREL END, AND TOEWALL QUANTITIES - 60° SKEW - TOTAL								
YD^3 CLASS AA CONCRETE	11.9	12.1	12.3	12.5	12.7			
LB BAR REINF STEEL	1924	1925	1927	1929	1930			
PARAPET, BARREL END, AND TOEWALL QUANTITIES - 45° SKEW - TOTAL								
YD^3 CLASS AA CONCRETE	14.6	14.9	15.1	15.4	15.6			
LB BAR REINF STEEL	2178	2182	2185	2188	2191			

TRIPLE 7'-0" X 7'-0" BOX CULVERT

BARREL REINFORCEMENT QUANTITIES AND DIMENSIONS

DESIGN	1	2	3	4	5	6	7	8
BAR A	461A @ 6"	455A @ 6"	539A @ 6"	542A @ 6"	547A @ 6"			
BAR B	479 @ 6"	575 @ 6"	622 @ 6"	623 @ 6"	619 @ 6"			
BAR C	521 @ 6"	522 @ 6"	523 @ 6"	603 @ 6"	604 @ 6"			
BAR D	433 @ 6"	433 @ 6"	433 @ 6"	524 @ 6"	524 @ 6"			
BAR E	429 @ 12"	430 @ 12"	522 @ 12"	524 @ 12"	525 @ 12"			
BAR F	519 @ 12"	430 @ 12"	431 @ 12"	433 @ 12"	435 @ 12"			
BAR G IN 2 SLABS	72 - 401	72 - 401	72 - 401	72 - 401	72 - 401			
BAR H IN 4 WALLS	40 - 402	40 - 402	40 - 402	40 - 402	40 - 402			
BAR J IN EXT. CORNER	0	0	3-410B @ 6¼"	3-413B @ 7"	4-415B @ 7¾"			
BAR J IN INT. CORNER	0	3-407B @ 5¾"	4-411B @ 6¼"	4-414B @ 7"	5-416B @ 7¾"			
T_1	9"	10"	11"	12"	13"			
T_2	10"	11"	12"	13"	14"			
T_3	9"	10"	11"	12"	13"			
X	24'-6"	24'-8"	24'-10"	25'-0"	25'-2"			
Y	8'-7"	8'-9"	8'-11"	9'-1"	9'-3"			
YD^3 CLASS AA CONCRETE/FT	2.372	2.577	2.784	2.994	3.205			
LB BAR REINF STEEL/FT	309.8	348.4	441.0	491.4	511.2			
PARAPET, BARREL END, AND TOEWALL QUANTITIES - 90° SKEW - TOTAL								
YD^3 CLASS AA CONCRETE	10.6	10.8	11.0	11.2	11.4			
LB BAR REINF STEEL	1495	1494	1493	1491	1490			
PARAPET, BARREL END, AND TOEWALL QUANTITIES - 75° SKEW - TOTAL								
YD^3 CLASS AA CONCRETE	11.0	11.2	11.4	11.6	11.8			
LB BAR REINF STEEL	1847	1848	1849	1850	1851			
PARAPET, BARREL END, AND TOEWALL QUANTITIES - 60° SKEW - TOTAL								
YD^3 CLASS AA CONCRETE	12.3	12.5	12.7	12.9	13.2			
LB BAR REINF STEEL	1956	1957	1959	1961	1962			
PARAPET, BARREL END, AND TOEWALL QUANTITIES - 45° SKEW - TOTAL								
YD^3 CLASS AA CONCRETE	15.1	15.4	15.6	15.9	16.2			
LB BAR REINF STEEL	2213	2216	2219	2222	2225			

TRIPLE 7'-0" X 8'-0" BOX CULVERT

BARREL REINFORCEMENT QUANTITIES AND DIMENSIONS

DESIGN	1	2	3	4	5	6	7	8
BAR A	471A @ 6"	467A @ 6"	554A @ 6"	559A @ 6"	606A @ 6"			
BAR B	481 @ 6"	574 @ 6"	621 @ 6"	620 @ 6"	619 @ 6"			
BAR C	521 @ 6"	522 @ 6"	523 @ 6"	603 @ 6"	604 @ 6"			
BAR D	433 @ 6"	433 @ 6"	433 @ 6"	524 @ 6"	524 @ 6"			
BAR E	528 @ 12"	529 @ 12"	530 @ 12"	442 @ 6"	443 @ 6"			
BAR F	528 @ 12"	440 @ 12"	441 @ 12"	442 @ 12"	443 @ 12"			
BAR G IN 2 SLABS	72 - 401	72 - 401	72 - 401	72 - 401	72 - 401			
BAR H IN 4 WALLS	42 - 402	42 - 402	42 - 402	42 - 402	42 - 402			
BAR J IN EXT. CORNER	0	0	3-410B @ 6¼"	4-413B @ 7"	4-416B @ 7¾"			
BAR J IN INT. CORNER	0	3-407B @ 5¾"	4-411B @ 6¼"	4-414B @ 7"	5-416B @ 7¾"			
T_1	9"	10"	11"	12"	13"			
T_2	10"	11"	12"	13"	14"			
T_3	9"	10"	11"	12"	13"			
X	24'-6"	24'-8"	24'-10"	25'-0"	25'-2"			
Y	9'-7"	9'-9"	9'-11"	10'-1"	10'-3"			
YD^3 CLASS AA CONCRETE/FT	2.502	2.713	2.926	3.142	3.360			
LB BAR REINF STEEL/FT	335.1	365.1	454.8	515.4	572.7			
PARAPET, BARREL END, AND TOEWALL QUANTITIES - 90° SKEW - TOTAL								
YD^3 CLASS AA CONCRETE	11.0	11.2	11.4	11.6	11.8			
LB BAR REINF STEEL	1523	1522	1521	1519	1518			
PARAPET, BARREL END, AND TOEWALL QUANTITIES - 75° SKEW - TOTAL								
YD^3 CLASS AA CONCRETE	11.4	11.6	11.8	12.1	12.3			
LB BAR REINF STEEL	1876	1877	1878	1879	1880			
PARAPET, BARREL END, AND TOEWALL QUANTITIES - 60° SKEW - TOTAL								
YD^3 CLASS AA CONCRETE	12.7	13.0	13.2	13.5	13.7			
LB BAR REINF STEEL	1985	1986	1988	1990	1991			
PARAPET, BARREL END, AND TOEWALL QUANTITIES - 45° SKEW - TOTAL								
YD^3 CLASS AA CONCRETE	15.7	16.0	16.2	16.5	16.8			
LB BAR REINF STEEL	2242	2245	2249	2252	2255			

DEPARTMENT OF TRANSPORTATION
STATE OF GEORGIA

STANDARD

REINFORCED CONCRETE TRIPLE BOX CULVERT 7'X5', 7'X6', 7'X7' AND 7'X8'

NO SCALE — SEPTEMBER 2017

DATE | REVISION | BY

DES. YSK
DRW. FCS
TRA. ____
CHK. JWB

(SUBMITTED) STATE DESIGN POLICY ENGINEER

(APPROVED) Margaret B Pirkle CHIEF ENGINEER

NUMBER 2403

SHEET 2G OF 3

STATE	PROJECT NUMBER	SHEET NO.	TOTAL SHEETS
GA.			

TRIPLE 8'-0" X 4'-0" BOX CULVERT

BARREL REINFORCEMENT QUANTITIES AND DIMENSIONS

DESIGN	1	2	3	4	5	6	7	8
BAR A	509A @ 12"	423A @ 6"	427A @ 6"	511A @ 6"	514A @ 6"			
BAR B	487 @ 6"	584 @ 6"	637 @ 6"	635 @ 6"	632 @ 6"			
BAR C	442 @ 6"	706 @ 12"	533 @ 6"	605 @ 6"	606 @ 6"			
BAR D	531 @ 12"	442 @ 6"	442 @ 6"	442 @ 6"	531 @ 6"			
BAR E	412 @ 12"	413 @ 12"	414 @ 12"	415 @ 12"	416 @ 12"			
BAR F	506 @ 12"	413 @ 12"	414 @ 12"	415 @ 12"	416 @ 12"			
BAR G IN 2 SLABS	84 - 401	84 - 401	84 - 401	84 - 401	84 - 401			
BAR H IN 4 WALLS	24 - 402	24 - 402	24 - 402	24 - 402	24 - 402			
BAR J IN EXT. CORNER	0	0	0	0	3-421B @ 10 1/4"			
BAR J IN INT. CORNER	0	0	3-418B @ 8 1/2"	4-420B @ 9 1/2"	4-422B @ 10 1/4"			
T_1	12"	13"	14"	15"	16"			
T_2	13"	14"	15"	16"	17"			
T_3	12"	13"	14"	15"	16"			
X	28'-0"	28'-2"	28'-4"	28'-6"	28'-8"			
Y	6'-1"	6'-3	6'-5"	6'-7"	6'-9"			
YD^3 CLASS AA CONCRETE/FT	2.781	2.992	3.206	3.421	3.639			
LB BAR REINF STEEL/FT	257.1	319.0	392.5	464.2	501.0			
PARAPET, BARREL END, AND TOEWALL QUANTITIES - 90° SKEW - TOTAL								
YD^3 CLASS AA CONCRETE	11.3	11.4	11.6	11.8	12.0			
LB BAR REINF STEEL	1567	1565	1563	1561	1560			
PARAPET, BARREL END, AND TOEWALL QUANTITIES - 75° SKEW - TOTAL								
YD^3 CLASS AA CONCRETE	11.7	11.9	12.1	12.2	12.4			
LB BAR REINF STEEL	1961	1961	1962	1962	1962			
PARAPET, BARREL END, AND TOEWALL QUANTITIES - 60° SKEW - TOTAL								
YD^3 CLASS AA CONCRETE	13.1	13.3	13.5	13.7	13.9			
LB BAR REINF STEEL	2081	2082	2083	2084	2085			
PARAPET, BARREL END, AND TOEWALL QUANTITIES - 45° SKEW - TOTAL								
YD^3 CLASS AA CONCRETE	16.1	16.3	16.5	16.8	17.0			
LB BAR REINF STEEL	2362	2365	2367	2370	2372			

TRIPLE 8'-0" X 5'-0" BOX CULVERT

BARREL REINFORCEMENT QUANTITIES AND DIMENSIONS

DESIGN	1	2	3	4	5	6	7	8
BAR A	517A @ 12"	436A @ 6"	441A @ 6"	522A @ 6"	527A @ 6"			
BAR B	486 @ 6"	584 @ 6"	636 @ 6"	635 @ 6"	723 @ 6"			
BAR C	442 @ 6"	706 @ 12"	533 @ 6"	605 @ 6"	606 @ 6"			
BAR D	531 @ 12"	442 @ 6"	442 @ 6"	442 @ 6"	531 @ 6"			
BAR E	419 @ 12"	420 @ 12"	421 @ 12"	422 @ 12"	423 @ 12"			
BAR F	511 @ 12"	420 @ 12"	421 @ 12"	422 @ 12"	423 @ 12"			
BAR G IN 2 SLABS	84 - 401	84 - 401	84 - 401	84 - 401	84 - 401			
BAR H IN 4 WALLS	26 - 402	26 - 402	26 - 402	26 - 402	26 - 402			
BAR J IN EXT. CORNER	0	0	0	0	3-421B @ 10"			
BAR J IN INT. CORNER	0	0	3-418B @ 8 1/2"	4-420B @ 9 1/2"	4-423B @ 10"			
T_1	12"	13"	14"	15"	16"			
T_2	13"	14"	15"	16"	17"			
T_3	12"	13"	14"	15"	16"			
X	28'-0"	28'-2"	28'-4"	28'-6"	28'-8"			
Y	7'-1"	7'-3"	7'-5"	7'-7"	7'-9"			
YD^3 CLASS AA CONCRETE/FT	2.929	3.147	3.366	3.588	3.812			
LB BAR REINF STEEL/FT	267.4	329.7	402.7	477.9	556.2			
PARAPET, BARREL END, AND TOEWALL QUANTITIES - 90° SKEW - TOTAL								
YD^3 CLASS AA CONCRETE	11.6	11.8	11.9	12.1	12.3			
LB BAR REINF STEEL	1591	1589	1587	1585	1584			
PARAPET, BARREL END, AND TOEWALL QUANTITIES - 75° SKEW - TOTAL								
YD^3 CLASS AA CONCRETE	12.0	12.2	12.4	12.6	12.8			
LB BAR REINF STEEL	1986	1986	1986	1987	1987			
PARAPET, BARREL END, AND TOEWALL QUANTITIES - 60° SKEW - TOTAL								
YD^3 CLASS AA CONCRETE	13.4	13.6	13.8	14.0	14.3			
LB BAR REINF STEEL	2106	2107	2108	2109	2110			
PARAPET, BARREL END, AND TOEWALL QUANTITIES - 45° SKEW - TOTAL								
YD^3 CLASS AA CONCRETE	16.5	16.7	17.0	17.3	17.5			
LB BAR REINF STEEL	2388	2390	2393	2395	2398			

TRIPLE 8'-0" X 6'-0" BOX CULVERT

BARREL REINFORCEMENT QUANTITIES AND DIMENSIONS

DESIGN	1	2	3	4	5	6	7	8
BAR A	530A @ 12"	451A @ 6"	452A @ 6"	533A @ 6"	541A @ 6"			
BAR B	485 @ 6"	583 @ 6"	635 @ 6"	634 @ 6"	722 @ 6"			
BAR C	442 @ 6"	706 @ 12"	533 @ 6"	605 @ 6"	606 @ 6"			
BAR D	531 @ 12"	442 @ 6"	442 @ 6"	442 @ 6"	531 @ 6"			
BAR E	426 @ 12"	427 @ 12"	428 @ 12"	429 @ 12"	430 @ 12"			
BAR F	426 @ 12"	427 @ 12"	428 @ 12"	429 @ 12"	430 @ 12"			
BAR G IN 2 SLABS	84 - 401	84 - 401	84 - 401	84 - 401	84 - 401			
BAR H IN 4 WALLS	34 - 402	34 - 402	34 - 402	34 - 402	34 - 402			
BAR J IN EXT. CORNER	0	0	0	0	3-421B @ 10"			
BAR J IN INT. CORNER	0	0	3-418B @ 8 1/2"	4-420B @ 9 1/2"	4-423B @ 10"			
T_1	12"	13"	14"	15"	16"			
T_2	13"	14"	15"	16"	17"			
T_3	12"	13"	14"	15"	16"			
X	28'-0"	28'-2"	28'-4"	28'-6"	28'-8"			
Y	8'-1"	8'-3"	8'-5"	8'-7"	8'-9"			
YD^3 CLASS AA CONCRETE/FT	3.077	3.301	3.527	3.755	3.985			
LB BAR REINF STEEL/FT	270.7	343.9	416.8	495.3	573.9			
PARAPET, BARREL END, AND TOEWALL QUANTITIES - 90° SKEW - TOTAL								
YD^3 CLASS AA CONCRETE	11.9	12.1	12.3	12.4	12.6			
LB BAR REINF STEEL	1643	1641	1639	1637	1635			
PARAPET, BARREL END, AND TOEWALL QUANTITIES - 75° SKEW - TOTAL								
YD^3 CLASS AA CONCRETE	12.3	12.5	12.7	12.9	13.1			
LB BAR REINF STEEL	2039	2040	2040	2040	2041			
PARAPET, BARREL END, AND TOEWALL QUANTITIES - 60° SKEW - TOTAL								
YD^3 CLASS AA CONCRETE	13.8	14.0	14.2	14.4	14.7			
LB BAR REINF STEEL	2161	2162	2163	2164	2165			
PARAPET, BARREL END, AND TOEWALL QUANTITIES - 45° SKEW - TOTAL								
YD^3 CLASS AA CONCRETE	16.9	17.2	17.5	17.7	18.0			
LB BAR REINF STEEL	2446	2448	2451	2453	2456			

DEPARTMENT OF TRANSPORTATION
STATE OF GEORGIA

STANDARD

REINFORCED CONCRETE TRIPLE BOX CULVERT 8'X4', 8'X5' AND 8'X6'

NO SCALE — SEPTEMBER 2017

DES. YSK
DRW. FCS
TRA. ___
CHK. JWB

(SUBMITTED) STATE DESIGN POLICY ENGINEER

(APPROVED) Margaret B Pirkle CHIEF ENGINEER

NUMBER 2403

SHEET 2H OF 3

STATE	PROJECT NUMBER	SHEET NO.	TOTAL SHEETS
GA.			

TRIPLE 8'-0" X 7'-0" BOX CULVERT

BARREL REINFORCEMENT QUANTITIES AND DIMENSIONS

DESIGN	1	2	3	4	5	6	7	8
BAR A	549A @ 12"	462A @ 6"	464A @ 6"	548A @ 6"	552A @ 6"			
BAR B	484 @ 6"	582 @ 6"	633 @ 6"	631 @ 6"	721 @ 6"			
BAR C	705 @ 12"	532 @ 6"	533 @ 6"	605 @ 6"	606 @ 6"			
BAR D	531 @ 12"	442 @ 6"	442 @ 6"	705 @ 12"	531 @ 6"			
BAR E	433 @ 12"	435 @ 12"	437 @ 12"	439 @ 12"	440 @ 12"			
BAR F	433 @ 12"	435 @ 12"	437 @ 12"	439 @ 12"	440 @ 12"			
BAR G IN 2 SLABS	84 - 401	84 - 401	84 - 401	84 - 401	84 - 401			
BAR H IN 4 WALLS	40 - 402	40 - 402	40 - 402	40 - 402	40 - 402			
BAR J IN EXT. CORNER	0	0	0	3-419B @ 9½"	3-421B @ 10"			
BAR J IN INT. CORNER	0	0	3-418B @ 8½"	4-420B @ 9½"	4-423B @ 10"			
T_1	12"	13"	14"	15"	16"			
T_2	13"	14"	15"	16"	17"			
T_3	12"	13"	14"	15"	16"			
X	28'-0"	28'-2"	28'-4"	28'-6"	28'-8"			
Y	9'-1"	9'-3"	9'-5"	9'-7"	9'-9"			
YD^3 CLASS AA CONCRETE/FT	3.225	3.455	3.687	3.921	4.157			
LB BAR REINF STEEL/FT	311.1	359.0	429.1	542.0	589.6			
PARAPET, BARREL END, AND TOEWALL QUANTITIES - 90° SKEW - TOTAL								
YD^3 CLASS AA CONCRETE	12.3	12.5	12.7	12.9	13.1			
LB BAR REINF STEEL	1673	1671	1669	1667	1665			
PARAPET, BARREL END, AND TOEWALL QUANTITIES - 75° SKEW - TOTAL								
YD^3 CLASS AA CONCRETE	12.7	12.9	13.2	13.4	13.6			
LB BAR REINF STEEL	2071	2071	2072	2072	2072			
PARAPET, BARREL END, AND TOEWALL QUANTITIES - 60° SKEW - TOTAL								
YD^3 CLASS AA CONCRETE	14.2	14.4	14.7	14.9	15.2			
LB BAR REINF STEEL	2193	2194	2195	2196	2197			
PARAPET, BARREL END, AND TOEWALL QUANTITIES - 45° SKEW - TOTAL								
YD^3 CLASS AA CONCRETE	17.5	17.7	18.0	18.3	18.6			
LB BAR REINF STEEL	2480	2483	2485	2488	2490			

TRIPLE 8'-0" X 8'-0" BOX CULVERT

BARREL REINFORCEMENT QUANTITIES AND DIMENSIONS

DESIGN	1	2	3	4	5	6	7	8
BAR A	568A @ 12"	470A @ 6"	706A @ 12"	566A @ 6"	567A @ 6"			
BAR B	483 @ 6"	581 @ 6"	630 @ 6"	630 @ 6"	720 @ 6"			
BAR C	705 @ 12"	532 @ 6"	533 @ 6"	605 @ 6"	606 @ 6"			
BAR D	442 @ 6"	442 @ 6"	442 @ 6"	705 @ 12"	531 @ 6"			
BAR E	442 @ 12"	443 @ 12"	534 @ 12"	535 @ 12"	537 @ 12"			
BAR F	442 @ 12"	443 @ 12"	444 @ 12"	445 @ 12"	447 @ 12"			
BAR G IN 2 SLABS	84 - 401	84 - 401	84 - 401	84 - 401	84 - 401			
BAR H IN 4 WALLS	42 - 402	42 - 402	42 - 402	42 - 402	42 - 402			
BAR J IN EXT. CORNER	0	0	0	3-419B @ 9½"	3-421B @ 10"			
BAR J IN INT. CORNER	0	0	3-418B @ 8½"	4-420B @ 9½"	4-423B @ 10"			
T_1	12"	13"	14"	15"	16"			
T_2	13"	14"	15"	16"	17"			
T_3	12"	13"	14"	15"	16"			
X	28'-0"	28'-2"	28'-4"	28'-6"	28'-8"			
Y	10'-1"	10'-3"	10'-5"	10'-7"	10'-9"			
YD^3 CLASS AA CONCRETE/FT	3.373	3.610	3.848	4.088	4.330			
LB BAR REINF STEEL/FT	326.6	368.9	477.4	562.4	609.0			
PARAPET, BARREL END, AND TOEWALL QUANTITIES - 90° SKEW - TOTAL								
YD^3 CLASS AA CONCRETE	12.7	12.9	13.2	13.4	13.6			
LB BAR REINF STEEL	1701	1699	1698	1696	1694			
PARAPET, BARREL END, AND TOEWALL QUANTITIES - 75° SKEW - TOTAL								
YD^3 CLASS AA CONCRETE	13.2	13.4	13.7	13.9	14.1			
LB BAR REINF STEEL	2100	2101	2101	2101	2102			
PARAPET, BARREL END, AND TOEWALL QUANTITIES - 60° SKEW - TOTAL								
YD^3 CLASS AA CONCRETE	14.7	15.0	15.2	15.5	15.8			
LB BAR REINF STEEL	2223	2224	2225	2226	2227			
PARAPET, BARREL END, AND TOEWALL QUANTITIES - 45° SKEW - TOTAL								
YD^3 CLASS AA CONCRETE	18.1	18.4	18.7	19.0	19.4			
LB BAR REINF STEEL	2511	2513	2516	2518	2520			

TRIPLE 8'-0" X 9'-0" BOX CULVERT

BARREL REINFORCEMENT QUANTITIES AND DIMENSIONS

DESIGN	1	2	3	4	5	6	7	8
BAR A	585A @ 12"	474A @ 6"	573A @ 6"	575A @ 6"	607A @ 6"			
BAR B	482 @ 6"	580 @ 6"	629 @ 6"	628 @ 6"	719 @ 6"			
BAR C	705 @ 12"	532 @ 6"	533 @ 6"	605 @ 6"	606 @ 6"			
BAR D	442 @ 6"	442 @ 6"	442 @ 6"	705 @ 12"	531 @ 6"			
BAR E	539 @ 12"	541 @ 12"	543 @ 12"	452 @ 6"	453 @ 6"			
BAR F	449 @ 12"	450 @ 12"	451 @ 12"	452 @ 12"	453 @ 12"			
BAR G IN 2 SLABS	84 - 401	84 - 401	84 - 401	84 - 401	84 - 401			
BAR H IN 4 WALLS	50 - 402	50 - 402	50 - 402	50 - 402	50 - 402			
BAR J IN EXT. CORNER	0	0	0	3-419B @ 9½"	3-422B @ 10"			
BAR J IN INT. CORNER	0	0	3-418B @ 8½"	4-420B @ 9½"	4-423B @ 10"			
T_1	12"	13"	14"	15"	16"			
T_2	13"	14"	15"	16"	17"			
T_3	12"	13"	14"	15"	16"			
X	28'-0"	28'-2"	28'-4"	28'-6"	28'-8"			
Y	11'-1"	11'-3"	11'-5"	11'-7"	11'-9"			
YD^3 CLASS AA CONCRETE/FT	3.522	3.764	4.008	4.255	4.503			
LB BAR REINF STEEL/FT	354.0	391.0	497.9	585.8	679.9			
PARAPET, BARREL END, AND TOEWALL QUANTITIES - 90° SKEW - TOTAL								
YD^3 CLASS AA CONCRETE	13.1	13.3	13.6	13.8	14.0			
LB BAR REINF STEEL	1755	1753	1752	1750	1748			
PARAPET, BARREL END, AND TOEWALL QUANTITIES - 75° SKEW - TOTAL								
YD^3 CLASS AA CONCRETE	13.6	13.8	14.1	14.3	14.6			
LB BAR REINF STEEL	2156	2157	2157	2157	2158			
PARAPET, BARREL END, AND TOEWALL QUANTITIES - 60° SKEW - TOTAL								
YD^3 CLASS AA CONCRETE	15.2	15.4	15.7	16.0	16.3			
LB BAR REINF STEEL	2280	2281	2282	2283	2284			
PARAPET, BARREL END, AND TOEWALL QUANTITIES - 45° SKEW - TOTAL								
YD^3 CLASS AA CONCRETE	18.7	19.0	19.3	19.6	20.0			
LB BAR REINF STEEL	2571	2573	2576	2578	2581			

TRIPLE 8'-0" X 10'-0" BOX CULVERT

BARREL REINFORCEMENT QUANTITIES AND DIMENSIONS

DESIGN	1	2	3	4	5	6	7	8
BAR A	478A @ 6"	711A @ 12"	579A @ 6"	609A @ 6"	610A @ 6"			
BAR B	480 @ 6"	577 @ 6"	628 @ 6"	627 @ 6"	718 @ 6"			
BAR C	705 @ 12"	532 @ 6"	533 @ 6"	605 @ 6"	606 @ 6"			
BAR D	442 @ 6"	442 @ 6"	442 @ 6"	705 @ 12"	531 @ 6"			
BAR E	550 @ 12"	551 @ 12"	457 @ 6"	611 @ 12"	713 @ 12"			
BAR F	455 @ 12"	456 @ 12"	457 @ 12"	459 @ 12"	460 @ 12"			
BAR G IN 2 SLABS	84 - 401	84 - 401	84 - 401	84 - 401	84 - 401			
BAR H IN 4 WALLS	56 - 402	56 - 402	56 - 402	56 - 402	56 - 402			
BAR J IN EXT. CORNER	0	0	2-417B @ 8½"	3-420B @ 9½"	3-422B @ 10"			
BAR J IN INT. CORNER	0	0	3-418B @ 8½"	4-420B @ 9½"	4-423B @ 9¾"			
T_1	12"	13"	14"	15"	16"			
T_2	13"	14"	15"	16"	17"			
T_3	12"	13"	14"	15"	16"			
X	28'-0"	28'-2"	28'-4"	28'-6"	28'-8"			
Y	12'-1"	12'-3"	12'-5"	12'-7"	12'-9"			
YD^3 CLASS AA CONCRETE/FT	3.670	3.918	4.169	4.421	4.676			
LB BAR REINF STEEL/FT	373.2	442.4	531.4	659.5	716.9			
PARAPET, BARREL END, AND TOEWALL QUANTITIES - 90° SKEW - TOTAL								
YD^3 CLASS AA CONCRETE	13.4	13.6	13.9	14.1	14.4			
LB BAR REINF STEEL	1783	1781	1779	1777	1776			
PARAPET, BARREL END, AND TOEWALL QUANTITIES - 75° SKEW - TOTAL								
YD^3 CLASS AA CONCRETE	13.9	14.2	14.4	14.7	14.9			
LB BAR REINF STEEL	2186	2186	2186	2187	2187			
PARAPET, BARREL END, AND TOEWALL QUANTITIES - 60° SKEW - TOTAL								
YD^3 CLASS AA CONCRETE	15.5	15.8	16.1	16.4	16.7			
LB BAR REINF STEEL	2311	2312	2313	2314	2315			
PARAPET, BARREL END, AND TOEWALL QUANTITIES - 45° SKEW - TOTAL								
YD^3 CLASS AA CONCRETE	19.1	19.4	19.8	20.1	20.5			
LB BAR REINF STEEL	2603	2606	2608	2610	2613			

DEPARTMENT OF TRANSPORTATION
STATE OF GEORGIA

STANDARD

REINFORCED CONCRETE
TRIPLE BOX CULVERT
8'X7', 8'X8', 8'X9' AND 8'X10'

NO SCALE SEPTEMBER 2017

BY	REVISION	DATE

DES. YSK
DRW. FGS
TRA. ___
CHK. JWB

(SUBMITTED) STATE DESIGN POLICY ENGINEER
(APPROVED) Margaret B Pirkle CHIEF ENGINEER

NUMBER 2403
SHEET 21 OF 31

STATE	PROJECT NUMBER	SHEET NO.	TOTAL SHEETS
GA.			

TRIPLE 9'-0" X 4'-0" BOX CULVERT

BARREL REINFORCEMENT QUANTITIES AND DIMENSIONS

DESIGN	1	2	3	4	5	6	7	8
BAR A	513A @ 12"	434A @ 6"	701A @ 12"	516A @ 6"	601A @ 6"			
BAR B	494 @ 6"	591 @ 6"	644 @ 6"	648 @ 6"	728 @ 6"			
BAR C	450 @ 6"	709 @ 12"	543 @ 6"	609 @ 6"	610 @ 6"			
BAR D	539 @ 12"	449 @ 6"	449 @ 6"	707 @ 12"	539 @ 6"			
BAR E	414 @ 12"	415 @ 12"	416 @ 12"	418 @ 12"	419 @ 12"			
BAR F	414 @ 12"	415 @ 12"	416 @ 12"	418 @ 12"	419 @ 12"			
BAR G IN 2 SLABS	96 - 401	96 - 401	96 - 401	96 - 401	96 - 401			
BAR H IN 4 WALLS	24 - 402	24 - 402	24 - 402	24 - 402	24 - 402			
BAR J IN EXT. CORNER	0	0	0	0	3-427B @ 11½"			
BAR J IN INT. CORNER	0	0	3-422B @ 10¼"	4-425B @ 11"	4-428B @ 11¼"			
T_1	14"	15"	16"	17"	18"			
T_2	15"	16"	17"	18"	19"			
T_3	14"	15"	16"	17"	18"			
X	31'-4"	31'-6"	31'-8"	31'-10"	32'-0"			
Y	6'-5"	6'-7"	6'-9"	6'-11"	7'-1"			
YD^3 CLASS AA CONCRETE/FT	3.474	3.708	3.944	4.183	4.423			
LB BAR REINF STEEL/FT	275.1	354.1	454.0	529.1	629.7			
PARAPET, BARREL END, AND TOEWALL QUANTITIES - 90° SKEW - TOTAL								
YD^3 CLASS AA CONCRETE	12.7	12.9	13.1	13.2	13.4			
LB BAR REINF STEEL	1743	1740	1738	1735	1733			
PARAPET, BARREL END, AND TOEWALL QUANTITIES - 75° SKEW - TOTAL								
YD^3 CLASS AA CONCRETE	13.2	13.4	13.6	13.8	13.9			
LB BAR REINF STEEL	2181	2180	2180	2180	2179			
PARAPET, BARREL END, AND TOEWALL QUANTITIES - 60° SKEW - TOTAL								
YD^3 CLASS AA CONCRETE	14.7	14.9	15.1	15.3	15.6			
LB BAR REINF STEEL	2314	2314	2314	2315	2315			
PARAPET, BARREL END, AND TOEWALL QUANTITIES - 45° SKEW - TOTAL								
YD^3 CLASS AA CONCRETE	18.1	18.3	18.6	18.9	19.1			
LB BAR REINF STEEL	2624	2626	2627	2629	2631			

TRIPLE 9'-0" X 5'-0" BOX CULVERT

BARREL REINFORCEMENT QUANTITIES AND DIMENSIONS

DESIGN	1	2	3	4	5	6	7	8
BAR A	524A @ 12"	445A @ 6"	703A @ 12"	529A @ 6"	532A @ 6"			
BAR B	493 @ 6"	591 @ 6"	645 @ 6"	648 @ 6"	728 @ 6"			
BAR C	450 @ 6"	709 @ 12"	543 @ 6"	609 @ 6"	610 @ 6"			
BAR D	539 @ 12"	449 @ 6"	449 @ 6"	707 @ 12"	539 @ 6"			
BAR E	421 @ 12"	422 @ 12"	423 @ 12"	425 @ 12"	426 @ 12"			
BAR F	421 @ 12"	422 @ 12"	423 @ 12"	425 @ 12"	426 @ 12"			
BAR G IN 2 SLABS	96 - 401	96 - 401	96 - 401	96 - 401	96 - 401			
BAR H IN 4 WALLS	26 - 402	26 - 402	26 - 402	26 - 402	26 - 402			
BAR J IN EXT. CORNER	0	0	0	0	3-426B @ 11½"			
BAR J IN INT. CORNER	0	0	3-422B @ 10¼"	4-425B @ 11"	4-428B @ 11"			
T_1	14"	15"	16"	17"	18"			
T_2	15"	16"	17"	18"	19"			
T_3	14"	15"	16"	17"	18"			
X	31'-4"	31'-6"	31'-8"	31'-10"	32'-0"			
Y	7'-5"	7'-7"	7'-9"	7'-11"	8'-1"			
YD^3 CLASS AA CONCRETE/FT	3.635	3.875	4.117	4.362	4.608			
LB BAR REINF STEEL/FT	284.1	364.8	467.8	542.8	613.9			
PARAPET, BARREL END, AND TOEWALL QUANTITIES - 90° SKEW - TOTAL								
YD^3 CLASS AA CONCRETE	13.0	13.2	13.4	13.6	13.8			
LB BAR REINF STEEL	1767	1764	1762	1759	1757			
PARAPET, BARREL END, AND TOEWALL QUANTITIES - 75° SKEW - TOTAL								
YD^3 CLASS AA CONCRETE	13.5	13.7	13.9	14.1	14.3			
LB BAR REINF STEEL	2205	2205	2205	2204	2204			
PARAPET, BARREL END, AND TOEWALL QUANTITIES - 60° SKEW - TOTAL								
YD^3 CLASS AA CONCRETE	15.1	15.3	15.5	15.8	16.0			
LB BAR REINF STEEL	2339	2339	2339	2340	2340			
PARAPET, BARREL END, AND TOEWALL QUANTITIES - 45° SKEW - TOTAL								
YD^3 CLASS AA CONCRETE	18.6	18.8	19.1	19.4	19.6			
LB BAR REINF STEEL	2649	2651	2653	2655	2656			

TRIPLE 9'-0" X 6'-0" BOX CULVERT

BARREL REINFORCEMENT QUANTITIES AND DIMENSIONS

DESIGN	1	2	3	4	5	6	7	8
BAR A	534A @ 12"	456A @ 6"	458A @ 6"	543A @ 6"	545A @ 6"			
BAR B	492 @ 6"	590 @ 6"	648 @ 6"	647 @ 6"	728 @ 6"			
BAR C	450 @ 6"	542 @ 6"	543 @ 6"	609 @ 6"	710 @ 6"			
BAR D	539 @ 12"	449 @ 6"	449 @ 6"	707 @ 12"	539 @ 6"			
BAR E	428 @ 12"	429 @ 12"	430 @ 12"	431 @ 12"	433 @ 12"			
BAR F	428 @ 12"	429 @ 12"	430 @ 12"	431 @ 12"	433 @ 12"			
BAR G IN 2 SLABS	96 - 401	96 - 401	96 - 401	96 - 401	96 - 401			
BAR H IN 4 WALLS	34 - 402	34 - 402	34 - 402	34 - 402	34 - 402			
BAR J IN EXT. CORNER	0	0	0	0	3-426B @ 11½"			
BAR J IN INT. CORNER	0	0	3-422B @ 10¼"	4-425B @ 11"	4-428B @ 11½"			
T_1	14"	15"	16"	17"	18"			
T_2	15"	16"	17"	18"	19"			
T_3	14"	15"	16"	17"	18"			
X	31'-4"	31'-6"	31'-8"	31'-10"	32'-0"			
Y	8'-5"	8'-7"	8'-9"	8'-11"	9'-1"			
YD^3 CLASS AA CONCRETE/FT	3.795	4.042	4.290	4.541	4.793			
LB BAR REINF STEEL/FT	296.9	381.1	459.9	560.2	680.1			
PARAPET, BARREL END, AND TOEWALL QUANTITIES - 90° SKEW - TOTAL								
YD^3 CLASS AA CONCRETE	13.4	13.6	13.8	14.0	14.2			
LB BAR REINF STEEL	1818	1816	1813	1811	1808			
PARAPET, BARREL END, AND TOEWALL QUANTITIES - 75° SKEW - TOTAL								
YD^3 CLASS AA CONCRETE	13.9	14.1	14.3	14.5	14.7			
LB BAR REINF STEEL	2259	2259	2259	2258	2258			
PARAPET, BARREL END, AND TOEWALL QUANTITIES - 60° SKEW - TOTAL								
YD^3 CLASS AA CONCRETE	15.5	15.7	15.9	16.2	16.4			
LB BAR REINF STEEL	2394	2394	2394	2395	2395			
PARAPET, BARREL END, AND TOEWALL QUANTITIES - 45° SKEW - TOTAL								
YD^3 CLASS AA CONCRETE	19.0	19.3	19.6	19.9	20.2			
LB BAR REINF STEEL	2707	2709	2711	2713	2714			

DEPARTMENT OF TRANSPORTATION
STATE OF GEORGIA

STANDARD

REINFORCED CONCRETE
TRIPLE BOX CULVERT
9'X4', 9'X5' AND 9'X6'

NO SCALE — SEPTEMBER 2017

DES. YSK
DRW. EGS
TRA. ____
CHK. JWB

(SUBMITTED) STATE DESIGN POLICY ENGINEER
(APPROVED) Margaret B Pirkle CHIEF ENGINEER

NUMBER 2403
SHEET 2J OF 3

DATE | REVISION | BY

STATE	PROJECT NUMBER	SHEET NO.	TOTAL SHEETS
GA.			

TRIPLE 9'-0" X 7'-0" BOX CULVERT

BARREL REINFORCEMENT QUANTITIES AND DIMENSIONS

DESIGN	1	2	3	4	5	6	7	8
BAR A	553A @ 12"	465A @ 6"	705A @ 12"	557A @ 6"	562A @ 6"			
BAR B	491 @ 6"	589 @ 6"	643 @ 6"	646 @ 6"	727 @ 6"			
BAR C	450 @ 6"	542 @ 6"	543 @ 6"	609 @ 6"	710 @ 6"			
BAR D	539 @ 12"	449 @ 6"	449 @ 6"	707 @ 12"	539 @ 6"			
BAR E	437 @ 12"	439 @ 12"	440 @ 12"	441 @ 12"	442 @ 12"			
BAR F	437 @ 12"	439 @ 12"	440 @ 12"	441 @ 12"	442 @ 12"			
BAR G IN 2 SLABS	96 - 401	96 - 401	96 - 401	96 - 401	96 - 401			
BAR H IN 4 WALLS	40 - 402	40 - 402	40 - 402	40 - 402	40 - 402			
BAR J IN EXT. CORNER	0	0	0	0	3-426B @ 11½"			
BAR J IN INT. CORNER	0	0	3-422B @ 10¼"	4-425B @ 11"	4-428B @ 11½"			
T_1	14"	15"	16"	17"	18"			
T_2	15"	16"	17"	18"	19"			
T_3	14"	15"	16"	17"	18"			
X	31'-4"	31'-6"	31'-8"	31'-10"	32'-0"			
Y	9'-5"	9'-7"	9'-9"	9'-11"	10'-1"			
YD³CLASS AA CONCRETE/FT	3.956	4.208	4.463	4.720	4.978			
LB BAR REINF STEEL/FT	309.8	394.2	500.6	576.7	695.7			
PARAPET, BARREL END, AND TOEWALL QUANTITIES - 90° SKEW - TOTAL								
YD³CLASS AA CONCRETE	13.8	14.0	14.2	14.4	14.6			
LB BAR REINF STEEL	1849	1846	1844	1841	1839			
PARAPET, BARREL END, AND TOEWALL QUANTITIES - 75° SKEW - TOTAL								
YD³CLASS AA CONCRETE	14.3	14.5	14.7	15.0	15.2			
LB BAR REINF STEEL	2291	2291	2290	2290	2290			
PARAPET, BARREL END, AND TOEWALL QUANTITIES - 60° SKEW - TOTAL								
YD³CLASS AA CONCRETE	16.0	16.2	16.4	16.7	16.9			
LB BAR REINF STEEL	2427	2427	2427	2428	2428			
PARAPET, BARREL END, AND TOEWALL QUANTITIES - 45° SKEW - TOTAL								
YD³CLASS AA CONCRETE	19.6	19.9	20.2	20.5	20.8			
LB BAR REINF STEEL	2742	2744	2746	2748	2749			

TRIPLE 9'-0" X 8'-0" BOX CULVERT

BARREL REINFORCEMENT QUANTITIES AND DIMENSIONS

DESIGN	1	2	3	4	5	6	7	8
BAR A	570A @ 12"	472A @ 6"	708A @ 12"	569A @ 6"	572A @ 6"			
BAR B	490 @ 6"	588 @ 6"	640 @ 6"	645 @ 6"	726 @ 6"			
BAR C	708 @ 12"	542 @ 6"	608 @ 6"	609 @ 6"	710 @ 6"			
BAR D	539 @ 12"	449 @ 6"	449 @ 6"	707 @ 12"	539 @ 6"			
BAR E	444 @ 12"	445 @ 12"	447 @ 12"	448 @ 12"	449 @ 12"			
BAR F	444 @ 12"	445 @ 12"	447 @ 12"	448 @ 12"	449 @ 12"			
BAR G IN 2 SLABS	96 - 401	96 - 401	96 - 401	96 - 401	96 - 401			
BAR H IN 4 WALLS	42 - 402	42 - 402	42 - 402	42 - 402	42 - 402			
BAR J IN EXT. CORNER	0	0	0	3-424B @ 11"	3-426B @ 11½"			
BAR J IN INT. CORNER	0	0	3-422B @ 10¼"	4-425B @ 11"	4-428B @ 11¼"			
T_1	14"	15"	16"	17"	18"			
T_2	15"	16"	17"	18"	19"			
T_3	14"	15"	16"	17"	18"			
X	31'-4"	31'-6"	31'-8"	31'-10"	32'-0"			
Y	10'-5"	10'-7"	10'-9"	10'-11"	11'-1"			
YD³CLASS AA CONCRETE/FT	4.116	4.375	4.636	4.899	5.164			
LB BAR REINF STEEL/FT	350.2	404.1	554.0	607.9	708.1			
PARAPET, BARREL END, AND TOEWALL QUANTITIES - 90° SKEW - TOTAL								
YD³CLASS AA CONCRETE	14.3	14.5	14.7	15.0	15.2			
LB BAR REINF STEEL	1878	1876	1873	1871	1868			
PARAPET, BARREL END, AND TOEWALL QUANTITIES - 75° SKEW - TOTAL								
YD³CLASS AA CONCRETE	14.8	15.1	15.3	15.5	15.8			
LB BAR REINF STEEL	2321	2321	2320	2320	2320			
PARAPET, BARREL END, AND TOEWALL QUANTITIES - 60° SKEW - TOTAL								
YD³CLASS AA CONCRETE	16.5	16.8	17.1	17.3	17.6			
LB BAR REINF STEEL	2457	2457	2458	2458	2458			
PARAPET, BARREL END, AND TOEWALL QUANTITIES - 45° SKEW - TOTAL								
YD³CLASS AA CONCRETE	20.3	20.6	21.0	21.3	21.6			
LB BAR REINF STEEL	2773	2775	2777	2778	2780			

TRIPLE 9'-0" X 9'-0" BOX CULVERT

BARREL REINFORCEMENT QUANTITIES AND DIMENSIONS

DESIGN	1	2	3	4	5	6	7	8
BAR A	578A @ 12"	475A @ 6"	710A @ 12"	577A @ 6"	608A @ 6"			
BAR B	489 @ 6"	587 @ 6"	638 @ 6"	642 @ 6"	725 @ 6"			
BAR C	708 @ 12"	542 @ 6"	608 @ 6"	609 @ 6"	710 @ 6"			
BAR D	539 @ 12"	449 @ 6"	449 @ 6"	707 @ 12"	539 @ 6"			
BAR E	451 @ 12"	545 @ 12"	547 @ 12"	548 @ 12"	455 @ 6"			
BAR F	451 @ 12"	452 @ 12"	453 @ 12"	454 @ 12"	455 @ 12"			
BAR G IN 2 SLABS	96 - 401	96 - 401	96 - 401	96 - 401	96 - 401			
BAR H IN 4 WALLS	50 - 402	50 - 402	50 - 402	50 - 402	50 - 402			
BAR J IN EXT. CORNER	0	0	0	3-424B @ 11"	3-427B @ 11½"			
BAR J IN INT. CORNER	0	0	3-422B @ 10¼"	4-425B @ 11"	4-428B @ 11"			
T_1	14"	15"	16"	17"	18"			
T_2	15"	16"	17"	18"	19"			
T_3	14"	15"	16"	17"	18"			
X	31'-4"	31'-6"	31'-8"	31'-10"	32'-0"			
Y	11'-5"	11'-7"	11'-9"	11'-11"	12'-1"			
YD³CLASS AA CONCRETE/FT	4.277	4.542	4.809	5.078	5.349			
LB BAR REINF STEEL/FT	364.8	426.7	579.1	633.0	789.7			
PARAPET, BARREL END, AND TOEWALL QUANTITIES - 90° SKEW - TOTAL								
YD³CLASS AA CONCRETE	14.7	14.9	15.2	15.4	15.7			
LB BAR REINF STEEL	1932	1930	1927	1925	1922			
PARAPET, BARREL END, AND TOEWALL QUANTITIES - 75° SKEW - TOTAL								
YD³CLASS AA CONCRETE	15.3	15.5	15.8	16.0	16.3			
LB BAR REINF STEEL	2377	2377	2377	2377	2376			
PARAPET, BARREL END, AND TOEWALL QUANTITIES - 60° SKEW - TOTAL								
YD³CLASS AA CONCRETE	17.0	17.3	17.6	17.9	18.1			
LB BAR REINF STEEL	2515	2515	2515	2516	2516			
PARAPET, BARREL END, AND TOEWALL QUANTITIES - 45° SKEW - TOTAL								
YD³CLASS AA CONCRETE	20.9	21.3	21.6	21.9	22.3			
LB BAR REINF STEEL	2834	2835	2837	2839	2841			

TRIPLE 9'-0" X 10'-0" BOX CULVERT

BARREL REINFORCEMENT QUANTITIES AND DIMENSIONS

DESIGN	1	2	3	4	5	6	7	8
BAR A	588A @ 12"	479A @ 6"	581A @ 6"	583A @ 6"	611A @ 6"			
BAR B	488 @ 6"	585 @ 6"	641 @ 6"	639 @ 6"	724 @ 6"			
BAR C	708 @ 12"	542 @ 6"	608 @ 6"	609 @ 6"	710 @ 6"			
BAR D	539 @ 12"	449 @ 6"	449 @ 6"	707 @ 12"	539 @ 6"			
BAR E	553 @ 12"	555 @ 12"	460 @ 6"	461 @ 6"	463 @ 6"			
BAR F	457 @ 12"	459 @ 12"	460 @ 12"	461 @ 12"	463 @ 12"			
BAR G IN 2 SLABS	96 - 401	96 - 401	96 - 401	96 - 401	96 - 401			
BAR H IN 4 WALLS	56 - 402	56 - 402	56 - 402	56 - 402	56 - 402			
BAR J IN EXT. CORNER	0	0	0	3-424B @ 11"	3-427B @ 11½"			
BAR J IN INT. CORNER	0	0	3-422B @ 10¼"	4-425B @ 11"	4-428B @ 11"			
T_1	14"	15"	16"	17"	18"			
T_2	15"	16"	17"	18"	19"			
T_3	14"	15"	16"	17"	18"			
X	31'-4"	31'-6"	31'-8"	31'-10"	32'-0"			
Y	12'-5"	12'-7"	12'-9"	12'-11"	13'-1"			
YD³CLASS AA CONCRETE/FT	4.437	4.708	4.981	5.257	5.534			
LB BAR REINF STEEL/FT	392.5	440.1	606.4	656.5	809.6			
PARAPET, BARREL END, AND TOEWALL QUANTITIES - 90° SKEW - TOTAL								
YD³CLASS AA CONCRETE	15.0	15.3	15.5	15.8	16.0			
LB BAR REINF STEEL	1960	1958	1955	1953	1950			
PARAPET, BARREL END, AND TOEWALL QUANTITIES - 75° SKEW - TOTAL								
YD³CLASS AA CONCRETE	15.6	15.9	16.1	16.4	16.6			
LB BAR REINF STEEL	2407	2406	2406	2406	2405			
PARAPET, BARREL END, AND TOEWALL QUANTITIES - 60° SKEW - TOTAL								
YD³CLASS AA CONCRETE	17.4	17.7	18.0	18.3	18.6			
LB BAR REINF STEEL	2545	2545	2545	2546	2546			
PARAPET, BARREL END, AND TOEWALL QUANTITIES - 45° SKEW - TOTAL								
YD³CLASS AA CONCRETE	21.4	21.7	22.1	22.4	22.8			
LB BAR REINF STEEL	2866	2868	2869	2871	2873			

DEPARTMENT OF TRANSPORTATION
STATE OF GEORGIA

STANDARD

REINFORCED CONCRETE
TRIPLE BOX CULVERT
9'X7', 9'X8', 9'X9' AND 9'X10'

NO SCALE — SEPTEMBER 2017

DATE | REVISION | BY

DES. YSK
DRW. FGS
TRA. ____
CHK. JWB

(SUBMITTED) STATE DESIGN POLICY ENGINEER
(APPROVED) Margaret B Pirkle CHIEF ENGINEER

NUMBER 2403
SHEET 2K OF 3

STATE	PROJECT NUMBER	SHEET NO.	TOTAL SHEETS
GA.			

TRIPLE 10'-0" X 4'-0" BOX CULVERT

BARREL REINFORCEMENT QUANTITIES AND DIMENSIONS

DESIGN	1	2	3	4	5	6	7	8
BAR A	437A @ 6"	435A @ 6"	518A @ 6"	525A @ 6"	602A @ 6"			
BAR B	496 @ 6"	597 @ 6"	657 @ 6"	656 @ 6"	739 @ 6"			
BAR C	456 @ 6"	553 @ 6"	611 @ 6"	612 @ 6"	613 @ 6"			
BAR D	455 @ 6"	455 @ 6"	455 @ 6"	711 @ 12"	711 @ 12"			
BAR E	414 @ 12"	416 @ 12"	419 @ 12"	421 @ 12"	423 @ 12"			
BAR F	507 @ 12"	416 @ 12"	419 @ 12"	421 @ 12"	423 @ 12"			
BAR G IN 2 SLABS	96 - 401	102 - 401	102 - 401	120 - 401	120 - 401			
BAR H IN 4 WALLS	24 - 402	24 - 402	24 - 402	24 - 402	24 - 402			
BAR J IN EXT. CORNER	0	0	0	0	0			
BAR J IN INT. CORNER	0	0	3-427B @ 11 3/4"	3-429B @ 13 1/2"	3-432B @ 14 3/4"			
T_1	14"	16"	18"	20"	22"			
T_2	15"	17"	19"	21"	23"			
T_3	14"	16"	18"	20"	22"			
X	34'-4"	34'-8"	35'-0"	35'-4"	35'-8"			
Y	6'-5"	6'-9"	7'-1"	7'-5"	7'-9"			
YD^3 CLASS AA CONCRETE/FT	3.743	4.250	4.765	5.289	5.821			
LB BAR REINF STEEL/FT	315.4	385.2	542.1	579.1	672.6			
PARAPET, BARREL END, AND TOEWALL QUANTITIES - 90° SKEW - TOTAL								
YD^3 CLASS AA CONCRETE	13.8	14.2	14.5	14.9	15.3			
LB BAR REINF STEEL	1806	1855	1848	2025	2019			
PARAPET, BARREL END, AND TOEWALL QUANTITIES - 75° SKEW - TOTAL								
YD^3 CLASS AA CONCRETE	14.3	14.7	15.1	15.5	15.9			
LB BAR REINF STEEL	2283	2337	2335	2516	2514			
PARAPET, BARREL END, AND TOEWALL QUANTITIES - 60° SKEW - TOTAL								
YD^3 CLASS AA CONCRETE	16.0	16.4	16.8	17.3	17.7			
LB BAR REINF STEEL	2428	2483	2482	2665	2664			
PARAPET, BARREL END, AND TOEWALL QUANTITIES - 45° SKEW - TOTAL								
YD^3 CLASS AA CONCRETE	19.7	20.2	20.7	21.2	21.8			
LB BAR REINF STEEL	2764	2821	2824	3009	3011			

DEPARTMENT OF TRANSPORTATION
STATE OF GEORGIA

STANDARD

REINFORCED CONCRETE
TRIPLE BOX CULVERT
10'X4'

NO SCALE — SEPTEMBER 2017

DES. YSK
DRW. EGS
TRA. ____
CHK. JWB

(SUBMITTED) STATE DESIGN POLICY ENGINEER

(APPROVED) Margaret B Pitts
CHIEF ENGINEER

NUMBER 2403

SHEET 2L OF 3

STATE	PROJECT NUMBER	SHEET NO.	TOTAL SHEETS
GA.			

TRIPLE 10'-0" X 5'-0" BOX CULVERT

BARREL REINFORCEMENT QUANTITIES AND DIMENSIONS

DESIGN	1	2	3	4	5	6	7	8
BAR A	450A @ 6"	449A @ 6"	531A @ 6"	538A @ 6"	603A @ 6"			
BAR B	496 @ 6"	597 @ 6"	657 @ 6"	655 @ 6"	739 @ 6"			
BAR C	712 @ 12"	553 @ 6"	611 @ 6"	612 @ 6"	613 @ 6"			
BAR D	455 @ 6"	455 @ 6"	455 @ 6"	711 @ 12"	711 @ 12"			
BAR E	421 @ 12"	423 @ 12"	426 @ 12"	428 @ 12"	430 @ 12"			
BAR F	512 @ 12"	423 @ 12"	426 @ 12"	428 @ 12"	430 @ 12"			
BAR G IN 2 SLABS	96 - 401	102 - 401	102 - 401	120 - 401	120 - 401			
BAR H IN 4 WALLS	26 - 402	26 - 402	26 - 402	32 - 402	32 - 402			
BAR J IN EXT. CORNER	0	0	0	0	0			
BAR J IN INT. CORNER	0	0	3-427B @ 11 3/4"	3-429B @ 13 1/2"	4-432B @ 14 3/4"			
T_1	14"	16"	18"	20"	22"			
T_2	15"	17"	19"	21"	23"			
T_3	14"	16"	18"	20"	22"			
X	34'-4"	34'-8"	35'-0"	35'-4"	35'-8"			
Y	7'-5"	7'-9"	8'-1"	8'-5"	8'-9"			
YD^3 CLASS AA CONCRETE/FT	3.903	4.423	4.951	5.487	6.031			
LB BAR REINF STEEL/FT	360.6	395.9	555.8	596.5	708.6			
PARAPET, BARREL END, AND TOEWALL QUANTITIES - 90° SKEW - TOTAL								
YD^3 CLASS AA CONCRETE	14.1	14.5	14.9	15.3	15.7			
LB BAR REINF STEEL	1830	1879	1872	2077	2071			
PARAPET, BARREL END, AND TOEWALL QUANTITIES - 75° SKEW - TOTAL								
YD^3 CLASS AA CONCRETE	14.7	15.1	15.5	15.9	16.3			
LB BAR REINF STEEL	2308	2361	2359	2570	2568			
PARAPET, BARREL END, AND TOEWALL QUANTITIES - 60° SKEW - TOTAL								
YD^3 CLASS AA CONCRETE	16.4	16.8	17.3	17.7	18.2			
LB BAR REINF STEEL	2453	2508	2507	2720	2719			
PARAPET, BARREL END, AND TOEWALL QUANTITIES - 45° SKEW - TOTAL								
YD^3 CLASS AA CONCRETE	20.1	20.7	21.2	21.8	22.4			
LB BAR REINF STEEL	2790	2847	2849	3067	3069			

TRIPLE 10'-0" X 6'-0" BOX CULVERT

BARREL REINFORCEMENT QUANTITIES AND DIMENSIONS

DESIGN	1	2	3	4	5	6	7	8
BAR A	459A @ 6"	460A @ 6"	704A @ 12"	550A @ 6"	560A @ 6"			
BAR B	495 @ 6"	596 @ 6"	654 @ 6"	740 @ 6"	738 @ 6"			
BAR C	712 @ 12"	553 @ 6"	611 @ 6"	612 @ 6"	714 @ 6"			
BAR D	455 @ 6"	455 @ 6"	455 @ 6"	711 @ 12"	711 @ 12"			
BAR E	428 @ 12"	430 @ 12"	433 @ 12"	437 @ 12"	440 @ 12"			
BAR F	518 @ 12"	430 @ 12"	433 @ 12"	437 @ 12"	440 @ 12"			
BAR G IN 2 SLABS	96 - 401	102 - 401	102 - 401	120 - 401	120 - 401			
BAR H IN 4 WALLS	34 - 402	34 - 402	34 - 402	46 - 402	46 - 402			
BAR J IN EXT. CORNER	0	0	0	0	0			
BAR J IN INT. CORNER	0	0	3-427B @ 11 3/4"	3-430B @ 13"	3-432B @ 14 3/4"			
T_1	14"	16"	18"	20"	22"			
T_2	15"	17"	19"	21"	23"			
T_3	14"	16"	18"	20"	22"			
X	34'-4"	34'-8"	35'-0"	35'-4"	35'-8"			
Y	8'-5"	8'-9"	9'-1"	9'-5"	9'-9"			
YD^3 CLASS AA CONCRETE/FT	4.064	4.596	5.136	5.684	6.241			
LB BAR REINF STEEL/FT	375.9	410.4	569.9	671.4	733.1			
PARAPET, BARREL END, AND TOEWALL QUANTITIES - 90° SKEW - TOTAL								
YD^3 CLASS AA CONCRETE	14.5	14.9	15.3	15.7	16.2			
LB BAR REINF STEEL	1882	1930	1924	2156	2150			
PARAPET, BARREL END, AND TOEWALL QUANTITIES - 75° SKEW - TOTAL								
YD^3 CLASS AA CONCRETE	15.0	15.4	15.9	16.3	16.8			
LB BAR REINF STEEL	2362	2415	2413	2653	2651			
PARAPET, BARREL END, AND TOEWALL QUANTITIES - 60° SKEW - TOTAL								
YD^3 CLASS AA CONCRETE	16.7	17.2	17.7	18.2	18.7			
LB BAR REINF STEEL	2508	2563	2562	2805	2805			
PARAPET, BARREL END, AND TOEWALL QUANTITIES - 45° SKEW - TOTAL								
YD^3 CLASS AA CONCRETE	20.6	21.1	21.7	22.4	23.0			
LB BAR REINF STEEL	2847	2905	2907	3157	3159			

TRIPLE 10'-0" X 7'-0" BOX CULVERT

BARREL REINFORCEMENT QUANTITIES AND DIMENSIONS

DESIGN	1	2	3	4	5	6	7	8
BAR A	546A @ 12"	469A @ 6"	707A @ 12"	565A @ 6"	571A @ 6"			
BAR B	741 @ 12"	595 @ 6"	653 @ 6"	739 @ 6"	737 @ 6"			
BAR C	712 @ 12"	553 @ 6"	611 @ 6"	612 @ 6"	714 @ 6"			
BAR D	455 @ 6"	455 @ 6"	455 @ 6"	711 @ 12"	711 @ 12"			
BAR E	437 @ 12"	440 @ 12"	442 @ 12"	444 @ 12"	447 @ 12"			
BAR F	437 @ 12"	440 @ 12"	442 @ 12"	444 @ 12"	447 @ 12"			
BAR G IN 2 SLABS	96 - 401	102 - 401	102 - 401	120 - 401	120 - 401			
BAR H IN 4 WALLS	40 - 402	40 - 402	40 - 402	46 - 402	46 - 402			
BAR J IN EXT. CORNER	0	0	0	0	0			
BAR J IN INT. CORNER	0	0	3-427B @ 11 3/4"	3-430B @ 13"	3-432B @ 14 3/4"			
T_1	14"	16"	18"	20"	22"			
T_2	15"	17"	19"	21"	23"			
T_3	14"	16"	18"	20"	22"			
X	34'-4"	34'-8"	35'-0"	35'-4"	35'-8"			
Y	9'-5"	9'-9"	10'-1"	10'-5"	10'-9"			
YD^3 CLASS AA CONCRETE/FT	4.224	4.769	5.321	5.882	6.451			
LB BAR REINF STEEL/FT	399.1	423.5	585.8	683.1	744.8			
PARAPET, BARREL END, AND TOEWALL QUANTITIES - 90° SKEW - TOTAL								
YD^3 CLASS AA CONCRETE	14.9	15.3	15.8	16.2	16.7			
LB BAR REINF STEEL	1912	1961	1955	2160	2153			
PARAPET, BARREL END, AND TOEWALL QUANTITIES - 75° SKEW - TOTAL								
YD^3 CLASS AA CONCRETE	15.4	15.9	16.4	16.8	17.3			
LB BAR REINF STEEL	2394	2447	2445	2656	2654			
PARAPET, BARREL END, AND TOEWALL QUANTITIES - 60° SKEW - TOTAL								
YD^3 CLASS AA CONCRETE	17.2	17.7	18.3	18.8	19.3			
LB BAR REINF STEEL	2541	2596	2595	2809	2808			
PARAPET, BARREL END, AND TOEWALL QUANTITIES - 45° SKEW - TOTAL								
YD^3 CLASS AA CONCRETE	21.2	21.8	22.4	23.1	23.7			
LB BAR REINF STEEL	2882	2940	2942	3161	3163			

TRIPLE 10'-0" X 8'-0" BOX CULVERT

BARREL REINFORCEMENT QUANTITIES AND DIMENSIONS

DESIGN	1	2	3	4	5	6	7	8
BAR A	564A @ 12"	473A @ 6"	709A @ 12"	574A @ 6"	576A @ 6"			
BAR B	739 @ 12"	594 @ 6"	651 @ 6"	737 @ 6"	735 @ 6"			
BAR C	712 @ 12"	553 @ 6"	611 @ 6"	612 @ 6"	714 @ 6"			
BAR D	455 @ 6"	455 @ 6"	455 @ 6"	711 @ 12"	711 @ 12"			
BAR E	444 @ 12"	447 @ 12"	449 @ 12"	451 @ 12"	453 @ 12"			
BAR F	444 @ 12"	447 @ 12"	449 @ 12"	451 @ 12"	453 @ 12"			
BAR G IN 2 SLABS	96 - 401	102 - 401	102 - 401	120 - 401	120 - 401			
BAR H IN 4 WALLS	42 - 402	42 - 402	42 - 402	60 - 402	60 - 402			
BAR J IN EXT. CORNER	0	0	0	0	0			
BAR J IN INT. CORNER	0	0	3-427B @ 11 3/4"	3-430B @ 13"	4-432B @ 14 3/4"			
T_1	14"	16"	18"	20"	22"			
T_2	15"	17"	19"	21"	23"			
T_3	14"	16"	18"	20"	22"			
X	34'-4"	34'-8"	35'-0"	35'-4"	35'-8"			
Y	10'-5"	10'-9"	11'-1"	11'-5"	11'-9"			
YD^3 CLASS AA CONCRETE/FT	4.385	4.941	5.506	6.079	6.660			
LB BAR REINF STEEL/FT	407.6	433.7	598.6	703.5	779.8			
PARAPET, BARREL END, AND TOEWALL QUANTITIES - 90° SKEW - TOTAL								
YD^3 CLASS AA CONCRETE	15.4	15.9	16.4	16.8	17.3			
LB BAR REINF STEEL	1941	1991	1984	2246	2239			
PARAPET, BARREL END, AND TOEWALL QUANTITIES - 75° SKEW - TOTAL								
YD^3 CLASS AA CONCRETE	16.0	16.5	17.0	17.5	18.0			
LB BAR REINF STEEL	2424	2477	2475	2746	2744			
PARAPET, BARREL END, AND TOEWALL QUANTITIES - 60° SKEW - TOTAL								
YD^3 CLASS AA CONCRETE	17.8	18.4	18.9	19.5	20.1			
LB BAR REINF STEEL	2571	2626	2626	2901	2900			
PARAPET, BARREL END, AND TOEWALL QUANTITIES - 45° SKEW - TOTAL								
YD^3 CLASS AA CONCRETE	21.9	22.6	23.2	23.9	24.6			
LB BAR REINF STEEL	2913	2971	2974	3257	3260			

DEPARTMENT OF TRANSPORTATION
STATE OF GEORGIA

STANDARD

REINFORCED CONCRETE
TRIPLE BOX CULVERT
10'X5', 10'X6', 10'X7' AND 10'X8'

NO SCALE — SEPTEMBER 2017

DATE | REVISION | BY

DES. YSK
DRW. FGS
TRA. ____
CHK. JWB

(SUBMITTED) STATE DESIGN POLICY ENGINEER
(APPROVED) Margaret B Pirkle CHIEF ENGINEER

NUMBER 2403
SHEET 2M OF 3

STATE	PROJECT NUMBER	SHEET NO.	TOTAL SHEETS
GA.			

TRIPLE 10'-0" X 9'-0" BOX CULVERT

BARREL REINFORCEMENT QUANTITIES AND DIMENSIONS

DESIGN	1	2	3	4	5	6	7	8
BAR A	477A @ 6"	476A @ 6"	712A @ 12"	580A @ 6"	801A @ 12"			
BAR B	736 @ 12"	593 @ 6"	649 @ 6"	735 @ 6"	729 @ 6"			
BAR C	712 @ 12"	553 @ 6"	611 @ 6"	612 @ 6"	714 @ 6"			
BAR D	455 @ 6"	455 @ 6"	455 @ 6"	711 @ 12"	550 @ 6"			
BAR E	451 @ 12"	453 @ 12"	455 @ 12"	457 @ 12"	556 @ 12"			
BAR F	451 @ 12"	453 @ 12"	455 @ 12"	457 @ 12"	460 @ 12"			
BAR G IN 2 SLABS	96 - 401	102 - 401	102 - 401	120 - 401	120 - 401			
BAR H IN 4 WALLS	50 - 402	50 - 402	50 - 402	68 - 402	68 - 402			
BAR J IN EXT. CORNER	0	0	0	0	0			
BAR J IN INT. CORNER	0	0	3-427B @ 11 3/4"	3-430B @ 13"	4-432B @ 14 3/4"			
T_1	14"	16"	18"	20"	22"			
T_2	15"	17"	19"	21"	23"			
T_3	14"	16"	18"	20"	22"			
X	34'-4"	34'-8"	35'-0"	35'-4"	35'-8"			
Y	11'-5"	11'-9"	12'-1"	12'-5"	12'-9"			
YD^3 CLASS AA CONCRETE/FT	4.545	5.114	5.691	6.277	6.870			
LB BAR REINF STEEL/FT	438.7	447.9	615.2	719.8	835.6			
PARAPET, BARREL END, AND TOEWALL QUANTITIES - 90° SKEW - TOTAL								
YD^3 CLASS AA CONCRETE	15.8	16.3	16.8	17.3	17.9			
LB BAR REINF STEEL	1996	2045	2039	2301	2294			
PARAPET, BARREL END, AND TOEWALL QUANTITIES - 75° SKEW - TOTAL								
YD^3 CLASS AA CONCRETE	16.4	16.9	17.5	18.0	18.5			
LB BAR REINF STEEL	2480	2534	2532	2803	2801			
PARAPET, BARREL END, AND TOEWALL QUANTITIES - 60° SKEW - TOTAL								
YD^3 CLASS AA CONCRETE	18.3	18.9	19.5	20.1	20.7			
LB BAR REINF STEEL	2629	2684	2684	2959	2958			
PARAPET, BARREL END, AND TOEWALL QUANTITIES - 45° SKEW - TOTAL								
YD^3 CLASS AA CONCRETE	22.5	23.2	23.9	24.6	25.4			
LB BAR REINF STEEL	2974	3032	3034	3319	3321			

TRIPLE 10'-0" X 10'-0" BOX CULVERT

BARREL REINFORCEMENT QUANTITIES AND DIMENSIONS

DESIGN	1	2	3	4	5	6	7	8
BAR A	582A @ 12"	480A @ 6"	584A @ 6"	586A @ 6"	612A @ 6"			
BAR B	734 @ 12"	592 @ 6"	652 @ 6"	734 @ 6"	733 @ 6"			
BAR C	712 @ 12"	553 @ 6"	611 @ 6"	612 @ 6"	714 @ 6"			
BAR D	455 @ 6"	455 @ 6"	455 @ 6"	711 @ 6"	550 @ 6"			
BAR E	457 @ 12"	556 @ 12"	558 @ 12"	464 @ 6"	466 @ 6"			
BAR F	457 @ 12"	460 @ 12"	463 @ 12"	464 @ 12"	466 @ 12"			
BAR G IN 2 SLABS	96 - 401	102 - 401	102 - 401	120 - 401	120 - 401			
BAR H IN 4 WALLS	56 - 402	56 - 402	56 - 402	68 - 402	68 - 402			
BAR J IN EXT. CORNER	0	0	0	0	0			
BAR J IN INT. CORNER	0	0	3-427B @ 11 3/4"	4-430B @ 13"	4-432B @ 14 3/4"			
T_1	14"	16"	18"	20"	22"			
T_2	15"	17"	19"	21"	23"			
T_3	14"	16"	18"	20"	22"			
X	34'-4"	34'-8"	35'-0"	35'-4"	35'-8"			
Y	12'-5"	12'-9"	13'-1"	13'-5"	13'-9"			
YD^3 CLASS AA CONCRETE/FT	4.706	5.287	5.877	6.474	7.080			
LB BAR REINF STEEL/FT	432.7	469.7	644.6	762.0	882.9			
PARAPET, BARREL END, AND TOEWALL QUANTITIES - 90° SKEW - TOTAL								
YD^3 CLASS AA CONCRETE	16.2	16.7	17.2	17.7	18.3			
LB BAR REINF STEEL	2023	2073	2066	2301	2294			
PARAPET, BARREL END, AND TOEWALL QUANTITIES - 75° SKEW - TOTAL								
YD^3 CLASS AA CONCRETE	16.8	17.3	17.9	18.4	19.0			
LB BAR REINF STEEL	2509	2563	2561	2803	2801			
PARAPET, BARREL END, AND TOEWALL QUANTITIES - 60° SKEW - TOTAL								
YD^3 CLASS AA CONCRETE	18.7	19.3	19.9	20.5	21.2			
LB BAR REINF STEEL	2659	2715	2714	2959	2958			
PARAPET, BARREL END, AND TOEWALL QUANTITIES - 45° SKEW - TOTAL								
YD^3 CLASS AA CONCRETE	23.0	23.7	24.4	25.2	26.0			
LB BAR REINF STEEL	3006	3064	3066	3319	3321			

TRIPLE 10'-0" X 11'-0" BOX CULVERT

BARREL REINFORCEMENT QUANTITIES AND DIMENSIONS

DESIGN	1	2	3	4	5	6	7	8
BAR A	482A @ 6"	713A @ 12"	587A @ 6"	802A @ 12"	613A @ 6"			
BAR B	732 @ 12"	589 @ 6"	650 @ 6"	725 @ 6"	732 @ 6"			
BAR C	712 @ 12"	553 @ 6"	611 @ 6"	612 @ 6"	714 @ 6"			
BAR D	455 @ 6"	455 @ 6"	455 @ 6"	711 @ 12"	550 @ 6"			
BAR E	559 @ 12"	466 @ 6"	467 @ 6"	617 @ 12"	715 @ 12"			
BAR F	464 @ 12"	466 @ 12"	467 @ 12"	470 @ 12"	471 @ 12"			
BAR G IN 2 SLABS	96 - 401	102 - 401	102 - 401	120 - 401	120 - 401			
BAR H IN 4 WALLS	58 - 402	58 - 402	58 - 402	76 - 402	76 - 402			
BAR J IN EXT. CORNER	0	0	0	0	0			
BAR J IN INT. CORNER	0	0	3-427B @ 11 3/4"	4-430B @ 13"	4-432B @ 14 3/4"			
T_1	14"	16"	18"	20"	22"			
T_2	15"	17"	19"	21"	23"			
T_3	14"	16"	18"	20"	22"			
X	34'-4"	34'-8"	35'-0"	35'-4"	35'-8"			
Y	13'-5"	13'-9"	14'-1"	14'-5"	14'-9"			
YD^3 CLASS AA CONCRETE/FT	4.866	5.460	6.062	6.672	7.290			
LB BAR REINF STEEL/FT	481.3	532.0	666.2	816.4	924.8			
PARAPET, BARREL END, AND TOEWALL QUANTITIES - 90° SKEW - TOTAL								
YD^3 CLASS AA CONCRETE	16.5	17.0	17.6	18.1	18.7			
LB BAR REINF STEEL	2047	2097	2090	2352	2346			
PARAPET, BARREL END, AND TOEWALL QUANTITIES - 75° SKEW - TOTAL								
YD^3 CLASS AA CONCRETE	17.1	17.7	18.2	18.8	19.4			
LB BAR REINF STEEL	2534	2588	2586	2857	2855			
PARAPET, BARREL END, AND TOEWALL QUANTITIES - 60° SKEW - TOTAL								
YD^3 CLASS AA CONCRETE	19.1	19.7	20.3	21.0	21.6			
LB BAR REINF STEEL	2684	2739	2739	3014	3013			
PARAPET, BARREL END, AND TOEWALL QUANTITIES - 45° SKEW - TOTAL								
YD^3 CLASS AA CONCRETE	23.4	24.2	25.0	25.8	26.6			
LB BAR REINF STEEL	3032	3090	3092	3376	3379			

TRIPLE 10'-0" X 12'-0" BOX CULVERT

BARREL REINFORCEMENT QUANTITIES AND DIMENSIONS

DESIGN	1	2	3	4	5	6	7	8
BAR A	481A @ 6"	714A @ 12"	589A @ 6"	614A @ 6"	615A @ 6"			
BAR B	728 @ 12"	586 @ 6"	648 @ 6"	731 @ 6"	730 @ 6"			
BAR C	712 @ 12"	553 @ 6"	611 @ 6"	612 @ 6"	714 @ 6"			
BAR D	455 @ 6"	455 @ 6"	711 @ 12"	711 @ 12"	550 @ 6"			
BAR E	565 @ 12"	471 @ 6"	473 @ 6"	716 @ 12"	717 @ 12"			
BAR F	470 @ 12"	471 @ 12"	473 @ 12"	474 @ 12"	476 @ 12"			
BAR G IN 2 SLABS	96 - 401	102 - 401	102 - 401	120 - 401	120 - 401			
BAR H IN 4 WALLS	66 - 402	66 - 402	66 - 402	90 - 402	90 - 402			
BAR J IN EXT. CORNER	0	0	0	3-429B @ 13"	3-431B @ 14 3/4"			
BAR J IN INT. CORNER	0	0	3-427B @ 11 3/4"	4-430B @ 13"	4-432B @ 14 3/4"			
T_1	14"	16"	18"	20"	22"			
T_2	15"	17"	19"	21"	23"			
T_3	14"	16"	18"	20"	22"			
X	34'-4"	34'-8"	35'-0"	35'-4"	35'-8"			
Y	14'-5"	14'-9"	15'-1"	15'-5"	15'-9"			
YD^3 CLASS AA CONCRETE/FT	5.027	5.633	6.247	6.869	7.500			
LB BAR REINF STEEL/FT	481.3	550.8	700.2	905.8	973.8			
PARAPET, BARREL END, AND TOEWALL QUANTITIES - 90° SKEW - TOTAL								
YD^3 CLASS AA CONCRETE	16.9	17.5	18.1	18.6	19.2			
LB BAR REINF STEEL	2102	2151	2145	2435	2429			
PARAPET, BARREL END, AND TOEWALL QUANTITIES - 75° SKEW - TOTAL								
YD^3 CLASS AA CONCRETE	17.5	18.1	18.7	19.3	19.9			
LB BAR REINF STEEL	2590	2645	2643	2943	2941			
PARAPET, BARREL END, AND TOEWALL QUANTITIES - 60° SKEW - TOTAL								
YD^3 CLASS AA CONCRETE	19.6	20.2	20.9	21.6	22.3			
LB BAR REINF STEEL	2742	2797	2797	3103	3102			
PARAPET, BARREL END, AND TOEWALL QUANTITIES - 45° SKEW - TOTAL								
YD^3 CLASS AA CONCRETE	24.0	24.8	25.7	26.5	27.3			
LB BAR REINF STEEL	3092	3151	3153	3470	3472			

DEPARTMENT OF TRANSPORTATION
STATE OF GEORGIA

STANDARD

REINFORCED CONCRETE TRIPLE BOX CULVERT 10'X9', 10'X10', 10'X11' AND 10'X12'

NO SCALE — SEPTEMBER 2017

DATE | REVISION | BY

DES. YSK
DRW. FGS
TRA. ____
CHK. JWB

(SUBMITTED) STATE DESIGN POLICY ENGINEER

(APPROVED) Margaret B Pirkle CHIEF ENGINEER

NUMBER 2403

SHEET 2N OF 3

STATE	PROJECT NUMBER	SHEET NO.	TOTAL SHEETS
GA.			

MARK	LENGTH	TYPE
401	L* - 4"	1
402	L* + 20"	1
403	4'-0"	1
404	4'-2"	1
405	4'-4"	1
406	4'-6"	1
407	4'-8"	1
408	5'-0"	1
409	5'-2"	1
410	5'-4"	1
411	5'-6"	1
412	5'-8"	1
413	5'-10"	1
414	6'-0"	1
415	6'-2"	1
416	6'-4"	1
417	6'-5"	1
418	6'-6"	1
419	6'-8"	1
420	6'-10"	1
421	7'-0"	1
422	7'-2"	1
423	7'-4"	1
424	7'-5"	1
425	7'-6"	1
426	7'-8"	1
427	7'-10"	1
428	8'-0"	1
429	8'-2"	1
430	8'-4"	1
431	8'-6"	1
432	8'-7"	1
433	8'-8"	1
434	8'-9"	1
435	8'-10"	1
436	8'-11"	1
437	9'-0"	1
438	9'-1"	1
439	9'-2"	1
440	9'-4"	1
441	9'-6"	1
442	9'-8"	1
443	9'-10"	1
444	10'-0"	1
445	10'-2"	1
446	10'-3"	1
447	10'-4"	1
448	10'-6"	1
449	10'-8"	1
450	10'-10"	1
451	11'-0"	1
452	11'-2"	1
453	11'-4"	1
454	11'-6"	1
455	11'-8"	1
456	11'-10"	1
457	12'-0"	1
458	12'-1"	1
459	12'-2"	1
460	12'-4"	1
461	12'-6"	1
462	12'-7"	1
463	12'-8"	1
464	13'-0"	1
465	13'-3"	1
466	13'-4"	1
467	13'-8"	1
468	13'-10"	1
469	13'-11"	1
470	14'-0"	1
471	14'-4"	1
472	14'-5"	1
473	14'-8"	1
474	15'-0"	1
475	15'-1"	1
476	15'-4"	1

MARK	LENGTH	TYPE
477	15'-5"	1
478	16'-2"	1
479	16'-8"	1
480	17'-2"	1
481	17'-8"	1
482	17'-10"	1
483	18'-6"	1
484	19'-2"	1
485	19'-6"	1
486	19'-10"	1
487	20'-0"	1
488	20'-2"	1
489	20'-10"	1
490	21'-4"	1
491	21'-11"	1
492	22'-2"	1
493	22'-4"	1
494	22'-6"	1
495	25'-0"	1
496	25'-2"	1
501	4'-0"	1
502	5'-0"	1
503	5'-2"	1
504	5'-4"	1
505	5'-5"	1
506	5'-8"	1
507	6'-0"	1
508	6'-2"	1
509	6'-5"	1
510	6'-6"	1
511	6'-8"	1
512	7'-0"	1
513	7'-2"	1
514	7'-4"	1
515	7'-6"	1
516	7'-7"	1
517	7'-8"	1
518	8'-0"	1
519	8'-2"	1
520	8'-4"	1
521	8'-5"	1
522	8'-6"	1
523	8'-7"	1
524	8'-8"	1
525	8'-10"	1
526	8'-11"	1
527	9'-0"	1
528	9'-2"	1
529	9'-4"	1
530	9'-6"	1
531	9'-8"	1
532	9'-9"	1
533	9'-10"	1
534	10'-0"	1
535	10'-2"	1
536	10'-3"	1
537	10'-4"	1
538	10'-7"	1
539	10'-8"	1
540	10'-9"	1
541	10'-10"	1
542	10'-11"	1
543	11'-0"	1
544	11'-1"	1
545	11'-2"	1
546	11'-3"	1
547	11'-4"	1
548	11'-6"	1
549	11'-7"	1
550	11'-8"	1
551	11'-10"	1
552	11'-11"	1
553	12'-0"	1
554	12'-1"	1
555	12'-2"	1

MARK	LENGTH	TYPE
556	12'-4"	1
557	12'-6"	1
558	12'-8"	1
559	13'-0"	1
560	13'-2"	1
561	13'-4"	1
562	13'-5"	1
563	13'-6"	1
564	13'-11"	1
565	14'-0"	1
566	14'-1"	1
567	14'-2"	1
568	14'-4"	1
569	14'-5"	1
570	14'-7"	1
571	14'-8"	1
572	14'-9"	1
573	14'-10"	1
574	15'-10"	1
575	16'-6"	1
576	17'-0"	1
577	17'-2"	1
578	17'-4"	1
579	17'-6"	1
580	18'-5"	1
581	18'-11"	1
582	19'-5"	1
583	19'-6"	1
584	19'-10"	1
585	20'-8"	1
586	21'-0"	1
587	21'-2"	1
588	21'-6"	1
589	22'-0"	1
590	22'-2"	1
591	22'-4"	1
592	23'-6"	1
593	24'-0"	1
594	24'-4"	1
595	24'-8"	1
596	24'-10"	1
597	25'-0"	1
601	7'-8"	1
602	8'-4"	1
603	8'-8"	1
604	8'-9"	1
605	9'-11"	1
606	10'-0"	1
607	10'-7"	1
608	11'-0"	1
609	11'-1"	1
610	11'-2"	1
611	12'-2"	1
612	12'-4"	1
613	12'-6"	1
614	12'-7"	1
615	13'-3"	1
616	13'-11"	1
617	14'-0"	1
618	14'-3"	1
619	15'-6"	1
620	15'-10"	1
621	16'-0"	1
622	16'-4"	1
623	16'-6"	1
624	16'-10"	1
625	16'-11"	1
626	17'-2"	1
627	17'-5"	1
628	17'-8"	1
629	18'-5"	1
630	18'-6"	1
631	19'-0"	1
632	19'-1"	1
633	19'-2"	1

MARK	LENGTH	TYPE
634	19'-4"	1
635	19'-6"	1
636	19'-8"	1
637	19'-10"	1
638	20'-1"	1
639	20'-4"	1
640	20'-7"	1
641	20'-8"	1
642	20'-10"	1
643	21'-0"	1
644	21'-4"	1
645	21'-6"	1
646	21'-11"	1
647	22'-0"	1
648	22'-2"	1
649	22'-10"	1
650	23'-0"	1
651	23'-4"	1
652	23'-6"	1
653	23'-8"	1
654	23'-10"	1
655	24'-6"	1
656	24'-8"	1
657	24'-10"	1
701	7'-4"	1
702	7'-8"	1
703	8'-5"	1
704	9'-2"	1
705	9'-8"	1
706	9'-9"	1
707	10'-8"	1
708	10'-10"	1
709	10'-11"	1
710	11'-2"	1
711	11'-8"	1
712	11'-10"	1
713	12'-4"	1
714	12'-6"	1
715	14'-4"	1
716	15'-0"	1
717	15'-4"	1
718	17'-2"	1
719	18'-0"	1
720	18'-5"	1
721	18'-11"	1
722	19'-1"	1
723	19'-2"	1
724	20'-4"	1
725	21'-0"	1
726	21'-2"	1
727	21'-6"	1
728	21'-8"	1
729	21'-10"	1
730	22'-0"	1
731	22'-2"	1
732	22'-6"	1
733	23'-0"	1
734	23'-4"	1
735	23'-8"	1
736	23-10"	1
737	24'-0"	1
738	24'-2"	1
739	24'-4"	1
740	24'-6"	1
741	24'-10"	1

MARK	LENGTH	TYPE	A	B
401A	4'-2"	3	1'-7"	2'-7"
402A	4'-3"	3	1'-8"	2'-7"
403A	4'-4"	3	1'-8	2'-8"
404A	4'-4"	3	1'-9"	2'-7"
405A	4'-5"	3	1'-9"	2'-8"
406A	4'-6"	3	1'-10"	2'-8"
407A	4'-7"	3	1'-10"	2'-9"
408A	4'-9"	3	2'-0"	2'-9"
409A	4'-9"	3	2'-2"	2'-7"
410A	5'-0"	3	2'-2"	2'-10"
411A	5'-4"	3	1'-9"	3'-7"
412A	5'-5"	3	1'-9"	3'-8"
413A	5'-6"	3	1'-10"	3'-8"
414A	5'-7"	3	1'-11"	3'-8"
415A	5'-8"	3	1'-11"	3'-9"
416A	5'-8"	3	2'-1"	3'-7"
417A	5'-9"	3	2'-0"	3'-9"
418A	6'-0"	3	2'-2"	3'-10"
419A	6'-0"	3	2'-4"	3'-8"
420A	6'-1"	3	2'-3"	3'-10"
421A	6'-6"	3	1'-11"	4'-7"
422A	6'-7"	3	2'-0"	4'-7"
423A	6'-7"	3	2'-7"	4'-0"
424A	6'-8"	3	2'-0"	4'-8"
425A	6'-9"	3	2'-0"	4'-9"
426A	6'-9"	3	2'-1"	4'-8"
427A	6'-9"	3	2'-8"	4'-1"
428A	6'-10"	3	2'-1"	4'-9"
429A	6'-10"	3	2'-3"	4'-7"
430A	6'-11"	3	2'-2"	4'-9"
431A	7'-0"	3	2'-4"	4'-8"
432A	7'-0"	3	2'-5"	4'-7"
433A	7'-1"	3	2'-3"	4'-10"
434A	7'-2"	3	3'-0"	4'-2"
435A	7'-6"	3	3'-3"	4'-3"
436A	7'-7"	3	2'-7"	5'-0"
437A	7'-7"	3	3'-6"	4'-1"
438A	7'-9"	3	2'-2"	5'-7"
439A	7'-10"	3	2'-2"	5'-8"
440A	7'-10"	3	2'-3"	5'-7"
441A	7'-10"	3	2'-9"	5'-1"
442A	8'-0"	3	2'-3"	5'-9"
443A	8'-1"	3	2'-4"	5'-9"
444A	8'-1"	3	2'-6"	5'-7"
445A	8'-2"	3	3'-0"	5'-2"
446A	8'-3"	3	2'-5"	5'-10"
447A	8'-3"	3	2'-8"	5'-7"
448A	8'-4"	3	2'-8"	5'-8"
449A	8'-6"	3	3'-3"	5'-3"
450A	8'-6"	3	3'-5"	5'-1"
451A	8'-9"	3	2'-9"	6'-0"
452A	8'-11"	3	2'-10"	6'-1"
453A	9'-1"	3	2'-5"	6'-8"
454A	9'-1"	3	2'-6"	6'-7"
455A	9'-3"	3	2'-6"	6'-9"
456A	9'-3"	3	3'-1"	6'-2"
457A	9'-4"	3	2'-8"	6'-8"
458A	9'-5"	3	3'-2"	6'-3"
459A	9'-5"	3	3'-4"	6'-1"
460A	9'-7"	3	3'-4"	6'-3"
461A	9'-9"	3	3'-1"	6'-8"
462A	9'-10"	3	2'-10"	7'-0"
463A	9'-10"	3	3'-3"	6'-7"
464A	10'-1"	3	3'-0"	7'-1"
465A	10'-4"	3	3'-2"	7'-2"
466A	10'-6"	3	2'-11"	7'-7"
467A	10'-7"	3	2'-10"	7'-9"
468A	10'-7"	3	2'-11"	7'-8"
469A	10'-8"	3	3'-5"	7'-3"
470A	11'-1"	3	3'-1"	8'-0"
471A	11'-5"	3	3'-9"	7'-8"
472A	11'-7"	3	3'-5"	8'-2"
473A	11'-10"	3	3'-7"	8'-3"
474A	12'-4"	3	3'-4"	9'-0"
475A	12'-9"	3	3'-7"	9'-2"
476A	13'-0"	3	3'-9"	9'-3"

MARK	LENGTH	TYPE	A	B
477A	13'-5"	3	4'-4"	9'-1"
478A	13'-9"	3	3'-10"	9'-11"
479A	14'-0"	3	3'-10"	10'-2"
480A	14'-3"	3	4'-0"	10'-3"
481A	16'-10"	3	4'-9"	12'-1"
482A	18'-1"	3	7'-0"	11'-1"
501A	4'-4"	3	1'-9"	2'-7"
502A	4'-8"	3	2'-1"	2'-7"
503A	5'-3"	3	2'-4"	2'-11"
504A	5'-6"	3	1'-11"	3'-7"
505A	5'-8"	3	2'-1"	3'-7"
506A	6'-3"	3	2'-4"	3'-11"
507A	6'-7"	3	2'-7"	4'-0"
508A	6'-9"	3	2'-2"	4'-7"
509A	6'-10"	3	2'-11"	3'-11"
510A	7'-1"	3	2'-6"	4'-7"
511A	7'-1"	3	2'-11"	4'-2"
512A	7'-3"	3	2'-4"	4'-11"
513A	7'-4"	3	3'-3"	4'-1"
514A	7'-6"	3	3'-3"	4'-3"
515A	7'-7"	3	2'-7"	5'-0"
516A	7'-7"	3	3'-3"	4'-4"
517A	7'-9"	3	2'-10"	4'-11"
518A	7'-11"	3	3'-6"	4'-5"
519A	8'-0"	3	2'-4"	5'-8"
520A	8'-0"	3	2'-5"	5'-7"
521A	8'-1"	3	2'-5"	5'-8"
522A	8'-1"	3	2'-11"	5'-2"
523A	8'-3"	3	2'-6"	5'-9"
524A	8'-4"	3	3'-3"	5'-1"
525A	8'-4"	3	3'-9"	4'-7"
526A	8'-5"	3	2'-6"	5'-11"
527A	8'-5"	3	3'-2"	5'-3"
528A	8'-7"	3	3'-0"	5'-7"
529A	8'-7"	3	3'-3"	5'-4"
530A	8'-11"	3	3'-0"	5'-11"
531A	8'-11"	3	3'-6"	5'-5"
532A	9'-0"	3	3'-7"	5'-5"
533A	9'-2"	3	3'-0"	6'-2"
534A	9'-3"	3	3'-2"	6'-1"
535A	9'-3"	3	3'-3"	6'-0"
536A	9'-4"	3	2'-7"	6'-9"
537A	9'-5"	3	2'-9"	6'-8"
538A	9'-5"	3	3'-10"	5'-7"
539A	9'-6"	3	2'-8"	6'-10"
540A	9'-6"	3	2'-9"	6'-9"
541A	9'-6"	3	3'-3"	6'-3"
542A	9'-7"	3	2'-8"	6'-11"
543A	9'-8"	3	3'-4"	6'-4"
544A	9'-9"	3	2'-10"	6'-11"
545A	10'-0"	3	3'-7"	6'-5"
546A	10'-3"	3	3'-2"	7'-1"
547A	10'-3"	3	3'-3"	7'-0"
548A	10'-4"	3	3'-2"	7'-2"
549A	10'-4"	3	3'-5"	6-11"
550A	10'-5"	3	3'-10"	6'-7"
551A	10'-7"	3	3'-0"	7'-7"
552A	10'-7"	3	3'-4"	7'-3"
553A	10'-7"	3	3'-6"	7'-1"
554A	10'-8"	3	2'-10"	7'-10"
555A	10'-8"	3	2'-11"	7'-9"
556A	10'-8"	3	3'-0"	7'-8"
557A	10'-9"	3	3'-5"	7'-4"
558A	10'-10"	3	3'-0"	7'-10"
559A	10'-11"	3	3'-0"	7'-11"
560A	10'-11"	3	4'-2"	6'-9"
561A	11'-1"	3	3'-2"	7'-11"
562A	11'-1"	3	3'-8"	7'-5"
563A	11'-3"	3	3'-8"	7'-7"
564A	11'-6"	3	3'-5"	8'-1"
565A	11'-6"	3	3'-11"	7'-7"
566A	11'-7"	3	3'-5"	8'-2"
567A	11'-10"	3	3'-7"	8'-3"
568A	11'-10"	3	3'-11"	7'-11"
569A	11'-11"	3	3'-7"	8'-4"

MARK	LENGTH	TYPE	A	B
570A	12'-0"	3	3'-11"	8'-1"
571A	12'-0"	3	4'-3"	7'-9"
572A	12'-3"	3	3'-10"	8'-5"
573A	12'-6"	3	3'-5"	9'-1"
574A	12'-8"	3	4'-1"	8'-7"
575A	13'-0"	3	3'-10"	9'-2"
576A	13'-2"	3	4'-5"	8'-9"
577A	13'-3"	3	3'-11"	9'-4"
578A	13'-7"	3	4'-6"	9'-1"
579A	13'-10"	3	3'-9"	10'-1"
580A	13'-10"	3	4'-3"	9'-7"
581A	14'-2"	3	3'-11"	10'-3"
582A	14'-4"	3	4'-3"	10'-1"
583A	14'-6"	3	4'-2"	10'-4"
584A	14'-7"	3	4'-2"	10'-5"
585A	14'-8"	3	5'-9"	8'-11"
586A	15'-0"	3	4'-5"	10'-7"
587A	15'-10"	3	4'-5"	11'-5"
588A	16'-7"	3	6'-6"	10'-1"
589A	17'-3"	3	4'-10"	12'-5"
601A	8'-0"	3	3'-7"	4'-5"
602A	8'-10"	3	4'-1"	4'-9"
603A	9'-10"	3	4'-1"	5'-9"
604A	10'-10"	3	3'-2"	7'-8"
605A	10'-11"	3	3'-2"	7'-9"
606A	11'-3"	3	3'-3"	8'-0"
607A	13'-0"	3	3'-9"	9'-3"
608A	13'-4"	3	3'-11"	9'-5"
609A	14'-2"	3	4'-0"	10'-2"
610A	14'-5"	3	4-2"	10'-3"
611A	14'-8"	3	4'-3"	10'-5"
612A	15'-6"	3	4'-9"	10'-9"
613A	16'-9"	3	5'-0"	11'-9"
614A	17'-7"	3	5'-0"	12'-7"
615A	18'-0"	3	5'-3"	12'-9"
701A	7'-10"	3	3'-7"	4'-3"
702A	8'-7"	3	2'-9"	5'-10"
703A	8'-9"	3	3'-6"	5'-3"
704A	10'-5"	3	4'-0"	6'-5"
705A	11'-0"	3	3'-9"	7'-3"
706A	11'-5"	3	3'-4"	8'-1"
707A	11'-6"	3	4'-1"	7'-5"
708A	12'-3"	3	4'-0"	8'-3"
709A	12'-8"	3	4'-3"	8'-5"
710A	13'-6"	3	4'-3"	9'-3"
711A	13'-11"	3	3'-11"	10'-0"
712A	13'-11"	3	4'-6"	9'-5"
713A	16'-0"	3	4'-9"	11'-3"
714A	17'-6"	3	5'-3"	12'-3"
801A	15'-1"	3	5'-4"	9'-9"
802A	17'-2"	3	5'-7"	11'-7"

MARK	LENGTH	TYPE	A	B
401B	3'-1 1/2"	6	1'-1 1/2"	0'-6"
402B	3'-1 5/8"	6	1'-1 5/8"	0'-6"
403B	3'-3 1/2"	6	1'-1 1/2"	0'-7"
404B	3'-3 5/8"	6	1'-1 5/8"	0'-7"
405B	3'-3 3/4"	6	1'-1 3/4"	0'-7"
406B	3'-5 1/2"	6	1'-1 1/2"	0'-8"
407B	3'-5 5/8"	6	1'-1 5/8"	0'-8"
408B	3'-5 3/4"	6	1'-1 3/4"	0'-8"
409B	3'-7 1/2"	6	1'-1 1/2"	0'-9"
410B	3'-7 5/8"	6	1'-1 5/8"	0'-9"
411B	3'-7 3/4"	6	1'-1 3/4"	0'-9"
412B	3'-7 7/8"	6	1'-1 7/8"	0'-9"
413B	3'-9 5/8"	6	1'-1 5/8"	0'-10"
414B	3'-9 3/4"	6	1'-1 3/4"	0'-10"
415B	3'-11 5/8"	6	1'-1 5/8"	0'-11'
416B	3'-11 3/4"	6	1'-1 3/4"	0'-11'
417B	4'-1 5/8"	6	1'-1 5/8"	1'-0"
418B	4'-1 3/4"	6	1'- 1 3/4"	1'-0"
419B	4'-3 5/8"	6	1'-1 5/8"	1'-1"
420B	4'-3 3/4"	6	1'-1 3/4"	1'-1"
421B	4'-5 5/8"	6	1'-1 5/8"	1'-2"
422B	4'-5 3/4"	6	1'-1 3/4"	1'-2"
423B	4'-5 7/8"	6	1'-1 7/8"	1'-2"
424B	4'-7 5/8"	6	1'-1 5/8"	1'-3"
425B	4'-7 3/4"	6	1'-1 3/4"	1'-3"
426B	4'-9 5/8"	6	1'-1 5/8"	1'-4"
427B	4'-9 3/4"	6	1'-1 3/4"	1'-4"
428B	4'-9 7/8"	6	1'-1 7/8"	1'-4"
429B	5'-1 3/4"	6	1'-1 3/4"	1'-6"
430B	5'-1 7/8"	6	1'-1 7/8"	1'-6"
431B	5'-5 3/4"	6	1'-1 3/4"	1'-8"
432B	5'-5 7/8"	6	1'-1 7/8"	1'-8"

▪ L = LENGTH OF CULVERT

DEPARTMENT OF TRANSPORTATION
STATE OF GEORGIA

STANDARD

REINFORCED CONCRETE TRIPLE BOX CULVERT

NO SCALE — SEPTEMBER 2017

DATE | REVISION | BY

DES. YSK
DRW. FGS
TRA. ____
CHK. JWB

(SUBMITTED) STATE DESIGN POLICY ENGINEER

(APPROVED) Margaret B Pinkle
CHIEF ENGINEER

NUMBER 2403
SHEET 3 OF 3

STATE	PROJECT NUMBER	SHEET NO.	TOTAL SHEETS
GA.			

WINGWALLS, TOEWALLS AND PARAPETS

CLEAR HEIGHT	N BARS AT 1'-0" C. TO C.						P BARS AT 1'-0" C. TO C.						R BARS AT 1'-0" C. TO C.				M BARS			CLEAR HEIGHT
	SIZE	NO. (CONSTANT LENGTH)	* LENGTH	NO. (VARIABLE LENGTH)	LENGTH * SHORTEST	LENGTH * LONGEST	SIZE	NO. (CONSTANT LENGTH)	LENGTH	NO. (VARIABLE LENGTH)	LENGTH SHORTEST	LENGTH LONGEST	SIZE	NO. (VARIABLE LENGTH)	LENGTH ** SHORTEST	LENGTH ** LONGEST	SIZE	NO. (CONSTANT LENGTH)	LENGTH	
2'	#4	4	5'-4"	12	4'-4"	5'-2"	#4	20	3'-5"	4	1'-2"	1'-2"	#6	32	3'-6"	3'-6"	#6	14	X+2"	2'
3'	#4	4	6'-7"	24	4'-4"	6'-5"	#4	20	6'-4"	8	1'-9"	4'-2"	#6	56	3'-6"	3'-6"	#6	14	X+2"	3'
4'	#5	4	8'-2"	40	4'-5"	8'-2"	#4	20	9'-10"	12	2'-11"	7'-9"	#6	88	3'-6"	3'-6"	#6	14	X+2"	4'
5'	#5	4	9'-1"	44	4'-11"	9'-0"	#4	20	11'-3"	16	2'-11"	10'-4"	#6	96	3'-6"	3'-6"	#6	14	X+2"	5'
6'	#5	4	10'-2"	48	5'-5"	9'-11"	#4	24	12'-7"	16	2'-11"	10'-5"	#6	104	3'-6"	3'-6"	#6	14	X+2"	6'
7'	#5	4	11'-2"	56	5'-11"	11'-2"	#4	24	13'-11"	20	3'-0"	13'-0"	#6	120	3'-6"	3'-6"	#6	14	X+2"	7'
8'	#6	4	12'-4"	60	6'-6"	12'-3"	#4	28	15'-2"	24	3'-2"	13'-0"	#6	128	3'-8"	4'-0"	#6	14	X+2"	8'
9'	#6	4	13'-5"	64	7'-0"	13'-2"	#4	28	16'-6"	24	3'-4"	15'-7"	#6	136	3'-8"	4'-6"	#6	14	X+2"	9'
10'	#7	4	14'-7"	72	7'-8"	14'-7"	#4	32	17'-9"	24	3'-4"	15'-7"	#6	152	3'-8"	5'-0"	#6	14	X+2"	10'
11'	#7	4	15'-7"	76	8'-2"	15'-6"	#4	32	19'-1"	28	3'-4"	18'-2"	#6	160	3'-8"	5'-6"	#6	14	X+2"	11'
12'	#8	4	16'-8"	80	8'-9"	16'-6"	#4	36	20'-5"	28	3'-5"	18'-3"	#6	168	3'-8"	6'-0"	#6	14	X+2"	12'

* LENGTH INCLUDES VERTICAL LEG, HORIZONTAL LEG AND 180° STANDARD HOOK.
** LENGTH INCLUDES 2 STANDARD 180° HOOKS.

X = TOTAL BARREL WIDTH OUT TO OUT (DIMENSION "X" FROM CULVERT SHEET)
Y = TOTAL BARREL HEIGHT OUT TO OUT (DIMENSION "Y" FROM CULVERT SHEET)

DIMENSIONS AND QUANTITIES

CLEAR HEIGHT	H	W_1	W_2	S	M	T_4	Z	CY CLASS AA CONCRETE	LBS. BAR REINF STEEL	CLEAR HEIGHT
2'	3'-1"	1'-1"	2'-0"	1'-1"	2'-8"	10"	-	3.3	270	2'
3'	4'-3½"	2'-3½"	2'-0"	2'-1½"	5'-7"	10"	-	6.0	499	3'
4'	5'-9"	3'-9"	2'-0"	2'-7"	9'-2"	10"	-	9.2	795	4'
5'	6'-9"	4'-3"	2'-6"	2'-7"	10'-6"	10"	-	12.4	1083	5'
6'	7'-9"	4'-9"	3'-0"	2'-7"	11'-10"	10"	-	15.0	1246	6'
7'	8'-9½"	5'-3½"	3'-6"	2'-7½"	13'-2"	10"	-	17.9	1507	7'
8'	9'-10½"	5'-10½"	4'-0"	2'-8½"	14'-5"	12"	1'-0"	25.3	2070	8'
9'	10'-11"	6'-5"	4'-6"	2'-9"	15'-9"	12"	1'-6"	29.9	2345	9'
10'	11'-11"	6'-11"	5'-0"	2'-9"	17'-0"	12"	2'-0"	34.7	3277	10'
11'	12'-11"	7'-5"	5'-6"	2'-9"	18'-4"	12"	2'-6"	40.0	3676	11'
12'	13'-11½"	7'-11½"	6'-0"	2'-9½"	19'-8"	12"	3'-0"	45.8	4788	12'

QUANTITIES GIVEN INCLUDE WINGWALL, WINGWALL FOOTING, AND WINGWALL TOEWALL FOR BOTH ENDS.

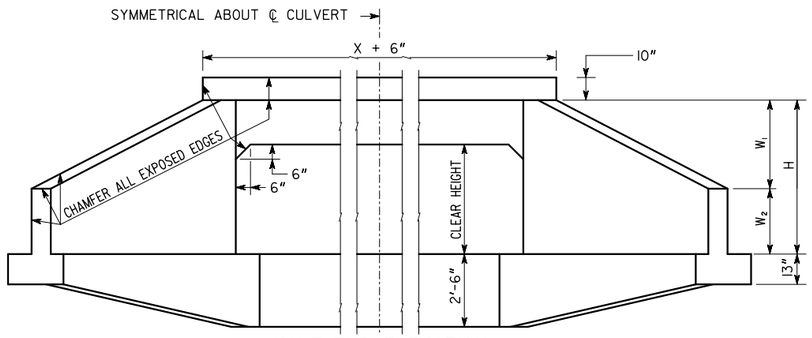

HALF END ELEVATION

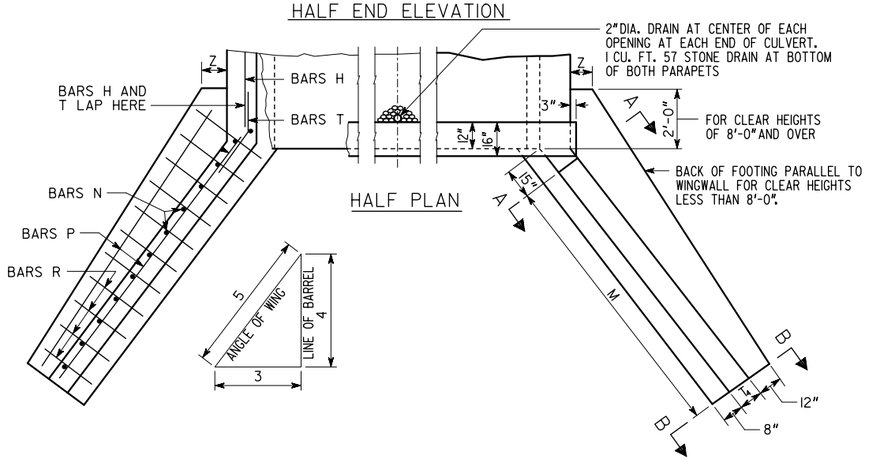

HALF PLAN

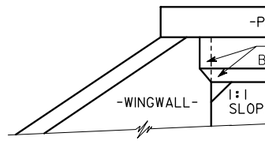

INLET BEVELING IS REQUIRED AT THE INLET OF ALL BOX CULVERTS EXTENDING FROM WINGWALL TO WINGWALL, AT TOP OF CULVERT AS SHOWN.

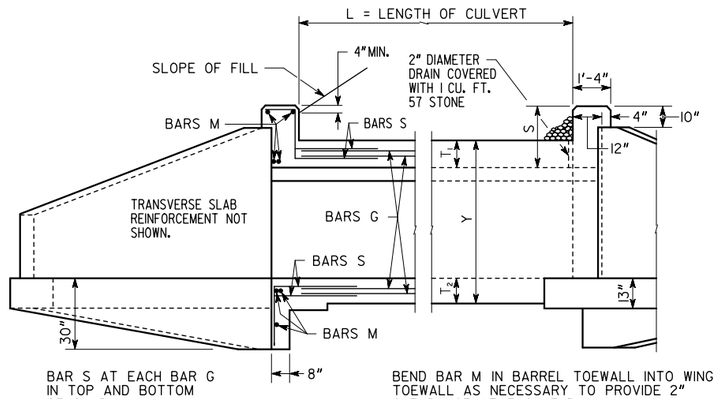

BAR S AT EACH BAR G IN TOP AND BOTTOM OF SLAB.

BEND BAR M IN BARREL TOEWALL INTO WING TOEWALL AS NECESSARY TO PROVIDE 2" CLEARANCE AT EACH END.

PART SECTION

PART ELEVATION

SIDE VIEW

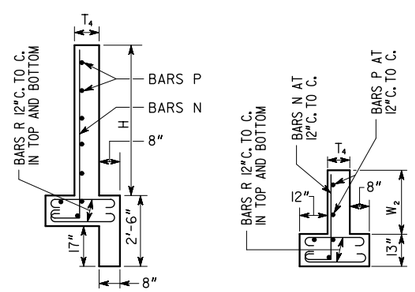

SECTION A-A

SECTION B-B

BARS S AND T ARE LAPPED WITH BARS G AND H, RESPECTIVELY.

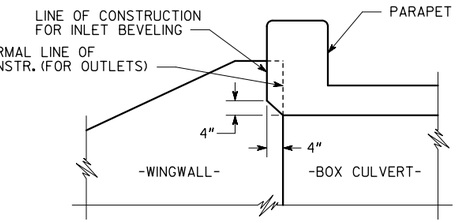

INLET BEVELING DETAIL

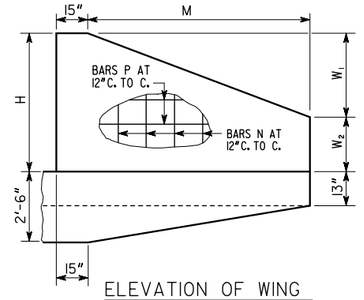

ELEVATION OF WING

GENERAL NOTES

1) SPECIFICATIONS: GEORGIA STANDARD, CURRENT EDITION & SUPPLEMENTS THERETO.

2) MAINTAIN 3" CLEARANCE ON REINFORCEMENT AT FACE OF CONCRETE CAST AGAINST EARTH. MAINTAIN 2" CLEARANCE ON ALL OTHER REINFORCEMENT.

3) CHAMFER ALL EXPOSED EDGES ¾".

4) CONCRETE APRONS (SEPARATE STANDARD SHEETS) ARE REQUIRED AT ALL OUTLETS. THE ENGINEER MAY ALLOW AN EXCEPTION FOR BED ROCK CONDITIONS. TOEWALLS UNDER PARAPETS MAY BE MODIFIED AT OUTLETS AS SHOWN ON STANDARDS FOR CONCRETE APRONS.

5) PARAPETS AT INLETS SHALL BE CONSTRUCTED WITH A 4"/45° BEVEL.

6) CULVERT TO HAVE MINIMUM OF 1'-0" BELOW BOTTOM OF BASE OR CONCRETE PAVEMENT.

DESIGN DATA

SPECIFICATIONS - AASHTO LRFD BRIDGE DESIGN SPECIFICATIONS, 7TH EDITION, 2014
LOADING - HL-93

T_1 = TOP SLAB THICKNESS
T_2 = BOTTOM SLAB THICKNESS
NOTE: SEE BOX CULVERT STANDARDS FOR DIMENSIONS.

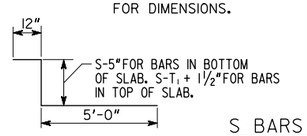

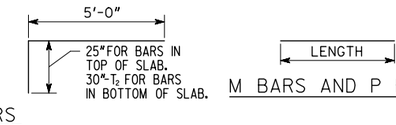

M BARS AND P BARS

S BARS (#4)

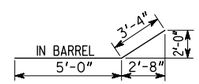

T BARS (#4)

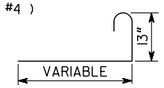

N BARS



R BARS

	DATE	DEPARTMENT OF TRANSPORTATION STATE OF GEORGIA	
	REVISION	STANDARD REINFORCED CONCRETE WINGWALLS, TOEWALLS AND PARAPETS FOR CONCRETE BOX CULVERTS	
		NO SCALE — SEPTEMBER 2017	
BY	DES. WEI DRW. WEI TRA. ____ CHK. YSK	(SUBMITTED) STATE DESIGN POLICY ENGINEER (APPROVED) Margaret B Pirkle CHIEF ENGINEER	NUMBER 2404

STATE	PROJECT NUMBER	SHEET NO.	TOTAL SHEETS
GA.			

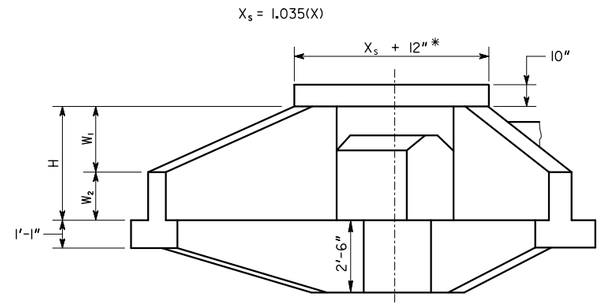

ELEVATION

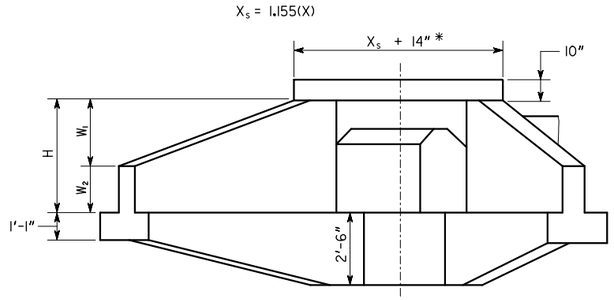

ELEVATION

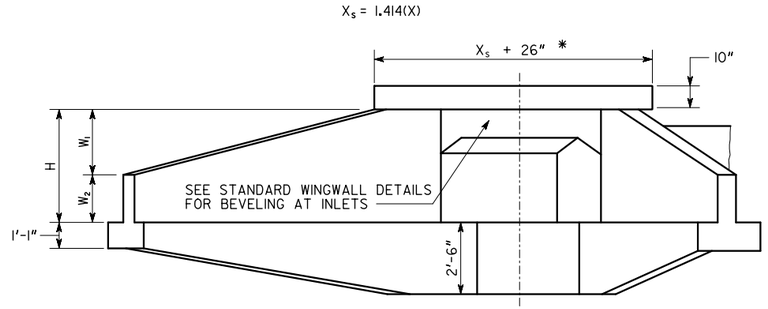

ELEVATION

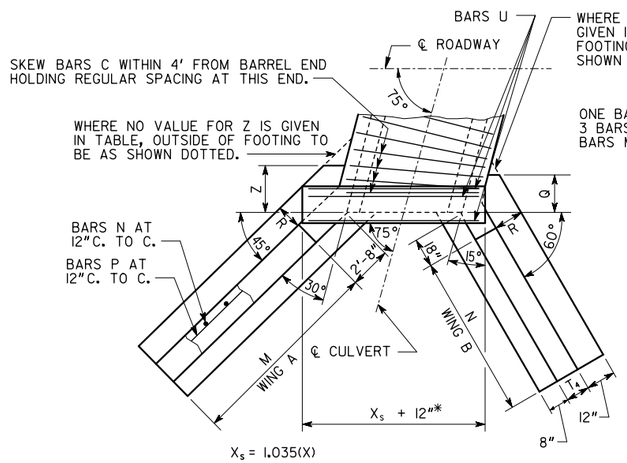

PLAN
75° SKEW

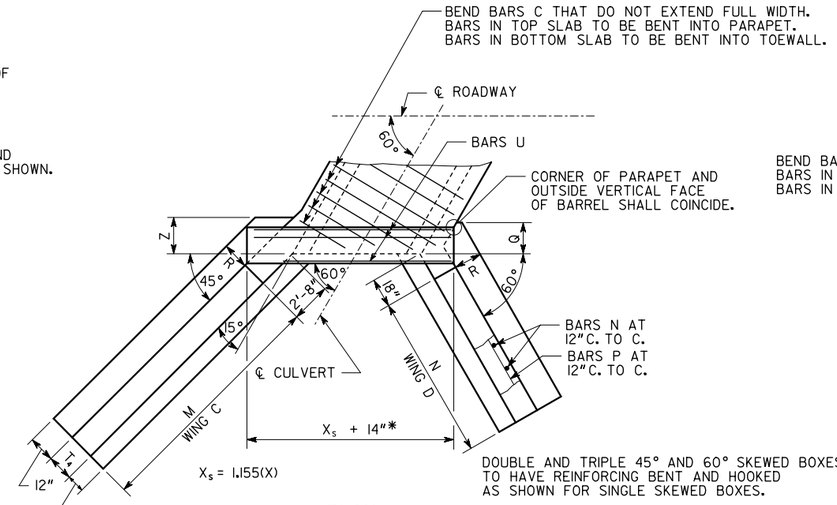

PLAN
60° SKEW

DOUBLE AND TRIPLE 45° AND 60° SKEWED BOXES TO HAVE REINFORCING BENT AND HOOKED AS SHOWN FOR SINGLE SKEWED BOXES.

BARS M AND U ARE SAME AS SHOWN FOR SINGLE SKEWED BOXES.

BEND BARS M AND U IN BARREL SLABS INTO WINGWALL AS NECESSARY TO PROVIDE 2" CLEARANCE AT EACH END.

BEND BARS M AND U IN BARREL TOEWALL INTO WING TOEWALL AS NECESSARY TO PROVIDE 2" CLEARANCE AT EACH END.

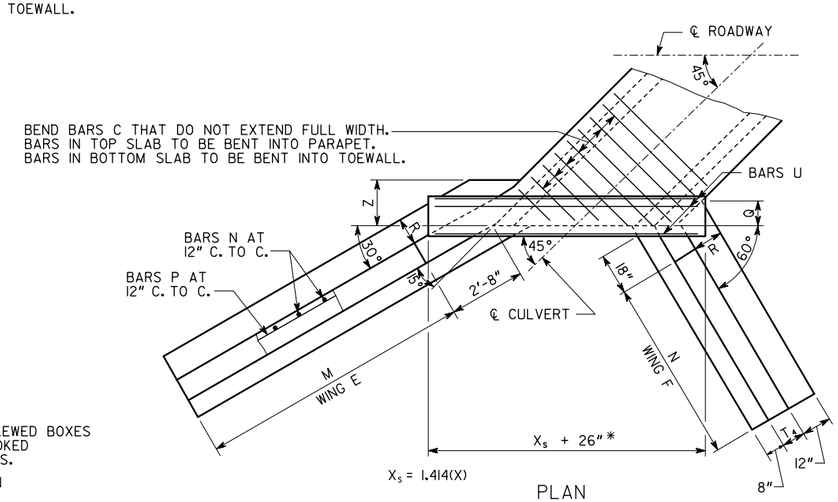

PLAN
45° SKEW

* ROUND DIMENSION UP TO THE NEAREST INCH

DESIGN DATA

SPECIFICATIONS - AASHTO LRFD BRIDGE DESIGN SPECIFICATIONS, 7TH EDITION, 2014
LOADING - HL-93

GENERAL NOTES

1) SPECIFICATIONS: GEORGIA STANDARD, CURRENT EDITION & SUPPLEMENTS THERETO.

2) THIS PLAN IS NOT COMPLETE IN ITSELF. FOR GENERAL NOTES, DETAILS AND, DIMENSIONS NOT SHOWN, SEE "REINFORCED CONCRETE WINGWALLS, TOEWALLS, AND PARAPETS FOR CONCRETE BOX CULVERTS".

3) QUANTITIES FOR BARREL REMAIN AS SHOWN ON REINFORCED CONCRETE BOX CULVERT STANDARDS.

4) MAINTAIN 3" CLEARANCE ON REINFORCEMENT AT FACE OF CONCRETE CAST AGAINST EARTH . MAINTAIN 2" CLEARANCE ON ALL OTHER REINFORCEMENT.

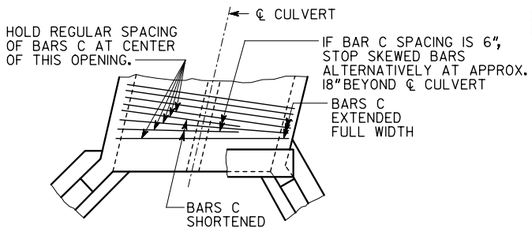

SKEW BARS WITHIN 4' FROM BARREL END FOR ALL SPANS.

PART PLAN
DOUBLE 75° SKEW BOX

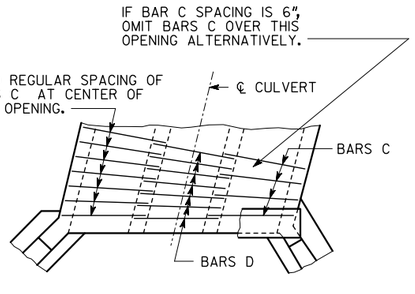

SKEW BARS WITHIN 6' FROM BARREL END FOR ALL SPANS.

PART PLAN
TRIPLE 75° SKEW BOX

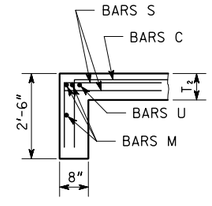

SECTION OF TOEWALL
SHOWING BEND ON BARS C FOR 60° AND 45° SKEWS

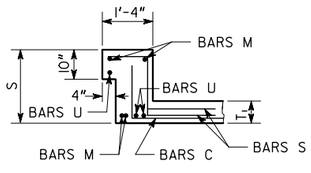

SECTION OF PARAPET
SHOWING BEND ON BARS C FOR 60° AND 45° SKEWS

SHOWING ARRANGEMENT OF SKEWED BARS IN SLAB

DEPARTMENT OF TRANSPORTATION
STATE OF GEORGIA

STANDARD
REINFORCED CONCRETE SKEWED WINGWALLS, TOEWALLS AND PARAPETS FOR 75°, 60°, AND 45° SKEWS

NO SCALE — SEPTEMBER 2017

BY	REVISION	DATE
DES. WEI		
DRW. WEI		
TRA.		
CHK. YSK		

(SUBMITTED) STATE DESIGN POLICY ENGINEER

(APPROVED) Margaret B Purdo CHIEF ENGINEER

NUMBER 2405

SHEET 1 OF 3

STATE	PROJECT NUMBER	SHEET NO.	TOTAL SHEETS
GA.			

WINGWALLS, TOEWALLS AND PARAPETS FOR 75° SKEW

CLEAR HEIGHT	N BARS AT 1'-0" C. TO C.						P BARS AT 1'-0" C. TO C. - WING A						P BARS AT 1'-0" C. TO C. - WING B						R BARS AT 1'-0" C. TO C.				M BARS			U BARS			CLEAR HEIGHT
	SIZE	NO. (CONSTANT LENGTH)	* LENGTH	NO. (VARIABLE LENGTH)	LENGTH * SHORTEST	LENGTH * LONGEST	SIZE	NO. (CONSTANT LENGTH)	LENGTH	NO. (VARIABLE LENGTH)	LENGTH SHORTEST	LENGTH LONGEST	SIZE	NO. (CONSTANT LENGTH)	LENGTH	NO. (VARIABLE LENGTH)	LENGTH SHORTEST	LENGTH LONGEST	SIZE	NO. (VARIABLE LENGTH)	LENGTH ** SHORTEST	LENGTH ** LONGEST	SIZE	NO. (CONSTANT LENGTH)	LENGTH	SIZE	NO. (CONSTANT LENGTH)	LENGTH	
2'	#4	8	5'-5"	12	4'-4"	5'-2"	#4	10	4'-6"	2	2'-1"	2'-1"	#4	10	3'-5"	2	1'-3"	1'-3"	#6	40	3'-6"	3'-6"	#6	14	X_s+8"	#6	8	X_s+8"	2'
3'	#4	6	6'-8"	26	4'-4"	6'-7"	#4	10	8'-0"	4	2'-8"	5'-6"	#4	10	6'-0"	4	1'-9"	4'-0"	#6	64	3'-6"	3'-6"	#6	14	X_s+8"	#6	8	X_s+8"	3'
4'	#5	6	8'-2"	40	4'-5"	8'-0"	#4	10	12'-0"	6	4'-0"	9'-7"	#4	10	9'-3"	6	2'-10"	7'-4"	#6	92	3'-6"	3'-6"	#6	14	X_s+8"	#6	8	X_s+8"	4'
5'	#5	6	9'-2"	52	4'-5"	9'-2"	#4	10	14'-8"	8	3'-11"	12'-3"	#4	10	11'-7"	8	2'-9"	9'-7"	#6	116	3'-6"	3'-6"	#6	14	X_s+8"	#6	8	X_s+8"	5'
6'	#5	6	10'-2"	58	4'-11"	10'-2"	#4	10	16'-3"	10	4'-0"	15'-3"	#4	10	12'-11"	10	2'-10"	12'-1"	#6	128	3'-6"	3'-6"	#6	14	X_s+8"	#6	8	X_s+8"	6'
7'	#5	6	11'-3"	62	5'-5"	11'-3"	#4	12	17'-7"	10	4'-1"	14'-6"	#4	12	13'-11"	10	2'-10"	12'-0"	#6	136	3'-6"	4'-8"	#6	14	X_s+8"	#6	8	X_s+8"	7'
8'	#6	6	12'-5"	68	6'-0"	12'-5"	#4	12	19'-3"	14	1'-6"	18'-3"	#4	12	15'-2"	14	0'-9"	14'-4"	#6	148	3'-8"	5'-4"	#6	14	X_s+8"	#6	8	X_s+8"	8'
9'	#6	6	13'-5"	72	6'-6"	13'-4"	#4	14	20'-10"	14	1'-8"	18'-5"	#4	14	16'-6"	14	0'-11"	14'-7"	#6	160	3'-8"	5'-10"	#6	14	X_s+8"	#6	8	X_s+8"	9'
10'	#7	6	14'-7"	78	7'-2"	14'-7"	#4	14	22'-2"	16	1'-8"	21'-2"	#4	14	17'-8"	16	0'-11"	16'-10"	#6	168	3'-8"	6'-5"	#6	14	X_s+8"	#6	8	X_s+8"	10'
11'	#7	6	15'-7"	84	7'-8"	15'-6"	#4	16	23'-10"	16	1'-8"	21'-5"	#4	16	19'-1"	16	0'-11"	17'-1"	#6	180	3'-8"	6'-11"	#6	14	X_s+8"	#6	8	X_s+8"	11'
12'	#8	6	16'-8"	90	8'-3"	16'-7"	#4	16	25'-2"	18	1'-9"	24'-2"	#4	16	20'-1"	18	1'-0"	19'-3"	#6	192	3'-8"	7'-5"	#6	14	X_s+8"	#6	8	X_s+8"	12'

* LENGTH INCLUDES VERTICAL LEG, HORIZONTAL LEG AND 180° STANDARD HOOK.
** LENGTH INCLUDES 2 STANDARD 180° HOOKS.

X_s = TOTAL SKEWED BARREL WIDTH OUT TO OUT (DIMENSION "X" FROM CULVERT SHEET TIMES 1.035)
Y = TOTAL BARREL HEIGHT OUT TO OUT (DIMENSION "Y" FROM CULVERT SHEET)

DIMENSIONS AND QUANTITIES FOR 75° SKEW

CLEAR HEIGHT	H	W_1	W_2	S	M	N	Q	R	T_4	Z	CY CLASS AA CONCRETE	LB BAR REINF STEEL	CLEAR HEIGHT
2'	3'-1"	1'-1"	2'-0"	1'-1"	3'-0"	2'-8"	-	1'-0"	10"	-	4.0	335	2'
3'	4'-3½"	2'-3½"	2'-0"	2'-1½"	6'-6"	5'-3"	-	1'-0"	10"	-	7.1	570	3'
4'	5'-9"	3'-9"	2'-0"	2'-7"	10'-6"	8'-6"	-	1'-0"	10"	-	11.4	999	4'
5'	6'-9"	4'-9"	2'-0"	2'-7"	13'-2"	10'-10"	-	1'-0"	10"	-	14.7	1287	5'
6'	7'-9"	5'-3"	2'-6"	2'-7"	14'-9"	12'-2"	-	1'-0"	10"	-	18.2	1502	6'
7'	8'-9½"	5'-9½"	3'-0"	2'-7½"	16'-1"	13'-2"	1'-6"	2'-0"	10"	2'-6"	22.3	1808	7'
8'	9'-10½"	6'-4½"	3'-6"	2'-8½"	17'-9"	14'-5"	2'-0"	2'-6"	12"	3'-0"	30.3	2492	8'
9'	10'-11"	6'-11"	4'-0"	2'-9"	19'-4"	15'-9"	2'-0"	3'-0"	12"	3'-0"	35.9	2851	9'
10'	11'-11"	7'-5"	4'-6"	2'-9"	20'-8"	16'-11"	2'-6"	3'-6"	12"	3'-6"	39.4	3775	10'
11'	12'-11"	7'-11"	5'-0"	2'-9"	22'-4"	18'-4"	3'-0"	4'-0"	12"	4'-0"	48.3	4289	11'
12'	13'-11½"	8'-5½"	5'-6"	2'-9½"	23'-8"	19'-4"	3'-0"	4'-6"	12"	4'-6"	54.7	5611	12'

QUANTITIES SHOWN INCLUDE WINGWALLS, WINGWALL FOOTINGS, AND WINGWALL TOEWALL FOR BOTH ENDS.

WINGWALLS, TOEWALLS AND PARAPETS FOR 60° SKEW

CLEAR HEIGHT	N BARS AT 1'-0" C. TO C.						P BARS AT 1'-0" C. TO C. - WING C						P BARS AT 1'-0" C. TO C. - WING D						R BARS AT 1'-0" C. TO C.				M BARS			U BARS			CLEAR HEIGHT
	SIZE	NO. (CONSTANT LENGTH)	* LENGTH	NO. (VARIABLE LENGTH)	LENGTH * SHORTEST	LENGTH * LONGEST	SIZE	NO. (CONSTANT LENGTH)	LENGTH	NO. (VARIABLE LENGTH)	LENGTH SHORTEST	LENGTH LONGEST	SIZE	NO. (CONSTANT LENGTH)	LENGTH	NO. (VARIABLE LENGTH)	LENGTH SHORTEST	LENGTH LONGEST	SIZE	NO. (VARIABLE LENGTH)	LENGTH ** SHORTEST	LENGTH ** LONGEST	SIZE	NO. (CONSTANT LENGTH)	LENGTH	SIZE	NO. (CONSTANT LENGTH)	LENGTH	
2'	#4	8	5'-5"	12	4'-4"	5'-2"	#4	10	4'-6"	2	2'-1"	2'-1"	#4	10	3'-5"	2	1'-3"	1'-3"	#6	40	3'-6"	3'-6"	#6	14	X_s+10"	#6	8	X_s+10"	2'
3'	#4	6	6'-8"	26	4'-4"	6'-7"	#4	10	8'-0"	4	2'-9"	5'-6"	#4	10	6'-0"	4	1'-9"	4'-0"	#6	64	3'-6"	3'-6"	#6	14	X_s+10"	#6	8	X_s+10"	3'
4'	#5	6	8'-2"	40	4'-5"	8'-0"	#4	10	12'-0"	6	4'-0"	9'-7"	#4	10	9'-3"	6	2'-9"	7'-4"	#6	92	3'-6"	3'-6"	#6	14	X_s+10"	#6	8	X_s+10"	4'
5'	#5	6	9'-2"	52	4'-5"	9'-2"	#4	10	14'-8"	8	3'-11"	12'-3"	#4	10	11'-7"	8	2'-9"	9'-7"	#6	116	3'-6"	3'-6"	#6	14	X_s+10"	#6	8	X_s+10"	5'
6'	#5	6	10'-2"	62	4'-5"	10'-2"	#4	10	17'-7"	10	4'-0"	15'-2"	#4	10	13'-11"	10	2'-9"	11'-11"	#6	136	3'-6"	3'-6"	#6	14	X_s+10"	#6	8	X_s+10"	6'
7'	#5	6	11'-3"	72	4'-5"	11'-3"	#4	10	20'-6"	12	4'-1"	18'-1"	#4	10	16'-2"	12	2'-10"	14'-3"	#6	156	3'-6"	4'-8"	#6	14	X_s+10"	#6	8	X_s+10"	7'
8'	#6	6	12'-5"	80	4'-10"	12'-5"	#4	10	22'-6"	16	1'-6"	21'-0"	#4	10	17'-10"	16	0'-9"	16'-8"	#6	172	3'-8"	5'-4"	#6	14	X_s+10"	#6	8	X_s+10"	8'
9'	#6	6	13'-5"	86	5'-2"	13'-5"	#4	10	24'-6"	16	1'-8"	23'-11"	#4	10	19'-6"	16	0'-11"	19'-1"	#6	188	3'-8"	5'-10"	#6	14	X_s+10"	#6	8	X_s+10"	9'
10'	#7	6	14'-7"	94	5'-8"	14'-7"	#4	12	26'-5"	18	1'-8"	24'-0"	#4	12	21'-1"	18	0'-11"	19'-2"	#6	200	3'-8"	6'-5"	#6	14	X_s+10"	#6	8	X_s+10"	10'
11'	#7	6	15'-7"	102	6'-0"	15'-7"	#4	12	28'-5"	20	1'-8"	26'-11"	#4	12	22'-9"	20	0'-11"	21'-7"	#6	216	3'-8"	6'-11"	#6	14	X_s+10"	#6	8	X_s+10"	11'
12'	#8	8	16'-8"	108	6'-5"	16'-8"	#4	12	30'-5"	22	1'-9"	29'-10"	#4	12	24'-5"	22	1'-0"	24'-0"	#6	232	3'-8"	7'-5"	#6	14	X_s+10"	#6	8	X_s+10"	12'

* LENGTH INCLUDES VERTICAL LEG, HORIZONTAL LEG AND 180° STANDARD HOOK.
** LENGTH INCLUDES 2 STANDARD 180° HOOKS.

X_s = TOTAL SKEWED BARREL WIDTH OUT TO OUT (DIMENSION "X" FROM CULVERT SHEET TIMES 1.155)
Y = TOTAL BARREL HEIGHT OUT TO OUT (DIMENSION "Y" FROM CULVERT SHEET)

DIMENSIONS AND QUANTITIES FOR 60° SKEW

CLEAR HEIGHT	H	W_1	W_2	S	M	N	Q	R	T_4	Z	CY CLASS AA CONCRETE	LB BAR REINF STEEL	CLEAR HEIGHT
2'	3'-1"	1'-1"	2'-0"	1'-1"	3'-0"	2'-8"	-	1'-0"	10"	-	4.0	335	2'
3'	4'-3½"	2'-3½"	2'-0"	2'-1½"	6'-6"	5'-3"	-	1'-0"	10"	-	7.1	570	3'
4'	5'-9"	3'-9"	2'-0"	2'-7"	10'-6"	8'-6"	-	1'-0"	10"	-	11.4	999	4'
5'	6'-9"	4'-9"	2'-0"	2'-7"	13'-2"	10'-10"	-	1'-0"	10"	-	14.7	1287	5'
6'	7'-9"	5'-9"	2'-0"	2'-7"	16'-1"	13'-2"	-	1'-0"	10"	-	18.5	1574	6'
7'	8'-9½"	6'-9½"	2'-0"	2'-7½"	19'-0"	15'-5"	1'-6"	2'-0"	10"	2'-6"	24.5	2018	7'
8'	9'-10½"	7'-6½"	2'-4"	2'-8½"	21'-0"	17'-1"	2'-0"	2'-6"	12"	3'-0"	33.5	2794	8'
9'	10'-11"	8'-3"	2'-8"	2'-9"	23'-0"	18'-9"	2'-0"	3'-0"	12"	3'-0"	38.3	3200	9'
10'	11'-11"	8'-11"	3'-0"	2'-9"	24'-11"	20'-4"	2'-6"	3'-0"	12"	3'-6"	46.4	4295	10'
11'	12'-11"	9'-7"	3'-4"	2'-9"	26'-11"	22'-0	3'-0"	4'-0"	12"	4'-0"	53.8	4910	11'
12'	13'-11½"	10'-3½"	3'-8"	2'-9½"	28'-11"	23'-8"	3'-0"	4'-6"	12"	4'-6"	61.7	6466	12'

QUANTITIES SHOWN INCLUDE WINGWALLS, WINGWALL FOOTINGS, AND WINGWALL TOEWALL FOR BOTH ENDS.

DATE
REVISION
BY

DEPARTMENT OF TRANSPORTATION
STATE OF GEORGIA

STANDARD
REINFORCED CONCRETE SKEWED WINGWALLS, TOEWALLS AND PARAPETS FOR 75° AND 60° SKEWS

NO SCALE — SEPTEMBER 2017

DES. WEI
DRW. WEI
TRA. ____
CHK. YSK

(SUBMITTED) STATE DESIGN POLICY ENGINEER
(APPROVED) Margaret B Pinkle CHIEF ENGINEER

NUMBER 2405
SHEET 2 OF 3

STATE	PROJECT NUMBER	SHEET NO.	TOTAL SHEETS
GA.			

WINGWALLS, TOEWALLS AND PARAPETS FOR 45° SKEW

CLEAR HEIGHT	N BARS AT 1'-0" C. TO C.						P BARS AT 1'-0" C. TO C. - WING E						P BARS AT 1'-0" C. TO C. - WING F						R BARS AT 1'-0" C. TO C.				M BARS			U BARS			CLEAR HEIGHT
	SIZE	NO. (CONSTANT LENGTH)	* LENGTH	NO. (VARIABLE LENGTH)	LENGTH * SHORTEST	LENGTH * LONGEST	SIZE	NO. (CONSTANT LENGTH)	LENGTH	NO. (VARIABLE LENGTH)	LENGTH SHORTEST	LENGTH LONGEST	SIZE	NO. (CONSTANT LENGTH)	LENGTH	NO. (VARIABLE LENGTH)	LENGTH SHORTEST	LENGTH LONGEST	SIZE	NO. (VARIABLE LENGTH)	LENGTH ** SHORTEST	LENGTH ** LONGEST	SIZE	NO. (CONSTANT LENGTH)	LENGTH	SIZE	NO. (CONSTANT LENGTH)	LENGTH	
2'	#4	6	5'-5"	16	4'-4"	5'-4"	#4	10	5'-0"	2	1'-7"	1'-7"	#4	10	3'-5"	2	1'-3"	1'-3"	#6	44	3'-6"	3'-6"	#6	14	X_s + 1'-9"	#6	8	X_s + 1'-9"	2'
3'	#4	6	6'-8"	32	4'-4"	6'-7"	#4	10	9'-11"	4	2'-5"	6'-5"	#4	10	6'-0"	4	1'-9"	4'-0"	#6	76	3'-6"	3'-6"	#6	14	X_s + 1'-9"	#6	8	X_s + 1'-9"	3'
4'	#5	6	8'-2"	50	4'-5"	8'-2"	#4	10	15'-6"	6	4'-2"	12'-1"	#4	10	9'-3"	6	2'-9"	7'-4"	#6	108	3'-6"	3'-6"	#6	14	X_s + 1'-9"	#6	8	X_s + 1'-9"	4'
5'	#5	6	9'-2"	58	4'-9"	9'-2"	#4	10	18'-1"	8	4'-2"	15'-11"	#4	10	10'-11"	8	2'-10"	9'-8"	#6	128	3'-6"	3'-6"	#6	14	X_s + 1'-9"	#6	8	X_s + 1'-9"	5'
6'	#5	6	10'-2"	68	5'-1"	10'-2"	#4	10	20'-9"	10	4'-2"	19'-11"	#4	10	12'-7"	10	2'-10"	12'-2"	#6	148	3'-6"	3'-6"	#6	14	X_s + 1'-9"	#6	8	X_s + 1'-9"	6'
7'	#5	6	11'-3"	76	5'-5"	11'-3"	#4	12	23'-9"	10	4'-4"	20'-3"	#4	12	13'-11"	10	2'-10"	12'-0"	#6	164	3'-6"	4'-7"	#6	14	X_s + 1'-9"	#6	8	X_s + 1'-9"	7'
8'	#6	6	12'-5"	82	5'-10"	12'-3"	#4	12	26'-5"	14	0'-9"	24'-3"	#4	12	15'-6"	14	0'-9"	14'-4"	#6	176	3'-8"	5'-3"	#6	14	X_s + 1'-9"	#6	8	X_s + 1'-9"	8'
9'	#6	6	13'-5"	92	6'-2"	13'-4"	#4	12	29'-3"	16	0'-11"	28'-5"	#4	12	17'-2"	16	0'-11"	16'-9"	#6	196	3'-8"	5'-9"	#6	14	X_s + 1'-9"	#6	8	X_s + 1'-9"	9'
10'	#7	6	14'-7"	102	6'-8"	14'-7"	#4	14	31'-11"	16	0'-11"	28'-6"	#4	14	18'-9"	16	0'-11"	16'-10"	#6	216	3'-8"	6'-3"	#6	14	X_s + 1'-9"	#6	8	X_s + 1'-9"	10'
11'	#7	6	15'-7"	110	6'-11"	15'-7"	#4	14	34'-11"	18	0'-11"	32'-5"	#4	14	20'-5"	18	0'-11"	19'-0"	#6	232	3'-8"	6'-10"	#6	14	X_s + 1'-9"	#6	8	X_s + 1'-9"	11'
12'	#8	6	16'-8"	120	7'-3"	16'-8"	#4	14	37'-6"	20	1'-1"	36'-0"	#4	14	22'-1"	20	1'-0"	21'-4"	#6	248	3'-8"	7'-4"	#6	14	X_s + 1'-9"	#6	8	X_s + 1'-9"	12'

* LENGTH INCLUDES VERTICAL LEG, HORIZONTAL LEG AND 180° STANDARD HOOK.
** LENGTH INCLUDES 2 STANDARD 180° HOOKS.

X_s = TOTAL SKEWED BARREL WIDTH OUT TO OUT (DIMENSION "X" FROM CULVERT SHEET TIMES 1.414)
Y = TOTAL BARREL HEIGHT OUT TO OUT (DIMENSION "Y" FROM CULVERT SHEET)

DIMENSIONS AND QUANTITIES FOR 45° SKEW

CLEAR HEIGHT	H	W_1	W_2	S	M	N	Q	R	T_4	Z	CY CLASS AA CONCRETE	LB BAR REINF STEEL	CLEAR HEIGHT
2'	3'-1"	1'-1"	2'-0"	1'-1"	4'-3"	2'-8"	-	1'-0"	10"	-	4.5	365	2'
3'	4'-3½"	2'-3½"	2'-0"	2'-1½"	9'-2"	5'-3"	-	1'-0"	10"	-	8.1	669	3'
4'	5'-9"	3'-9"	2'-0"	2'-7"	14'-9"	8'-6"	-	1'-0"	10"	-	13.3	1132	4'
5'	6'-9"	4'-5"	2'-4"	2'-7"	17'-4"	10'-2"	-	1'-0"	10"	-	16.7	1432	5'
6'	7'-9"	5'-1"	2'-8"	2'-7"	20'-0"	11'-10"	-	1'-0"	10"	-	20.4	1736	6'
7'	8'-9½"	5'-9½"	3'-0"	2'-7½"	23'-0"	13'-2"	1'-6"	2'-0"	10"	2'-6"	26.6	2161	7'
8'	9'-10½"	6'-6½"	3'-4"	2'-8½"	25'-8"	14'-9"	2'-0"	2'-6"	12"	3'-6"	36.7	2926	8'
9'	10'-11"	7'-3"	3'-8"	2'-9"	28'-6"	16'-5"	2'-6"	3'-0"	12"	4'-0"	44.2	3459	9'
10'	11'-11"	7'-11"	4'-0"	2'-9"	31'-2"	18'-0"	2'-6"	3'-6"	12"	4'-6"	51.9	4729	10'
11'	12'-11"	8'-8"	4'-3"	2'-9"	34'-2"	19'-8"	3'-0"	4'-0"	12"	5'-0"	62.5	5388	11'
12'	13'-11½"	9'-5½"	4'-6"	2'-9½"	36'-9"	21'-4"	3'-0"	4'-6"	12"	5'-0"	70.2	7102	12'

QUANTITIES SHOWN INCLUDE WINGWALLS, WINGWALL FOOTINGS, AND WINGWALL TOEWALL FOR BOTH ENDS.

DEPARTMENT OF TRANSPORTATION
STATE OF GEORGIA

STANDARD
REINFORCED CONCRETE SKEWED
WINGWALLS, TOEWALLS AND PARAPETS
FOR 45° SKEW

NO SCALE — SEPTEMBER 2017

DATE / REVISION / BY

DES. WEI
DRW. WEI
TRA. ___
CHK. YSK

(SUBMITTED) STATE DESIGN POLICY ENGINEER
(APPROVED) Margaret B Pinkelo CHIEF ENGINEER

NUMBER 2405
SHEET 3 OF 3

STATE	PROJECT NUMBER	SHEET NO.	TOTAL SHEETS
GA.			

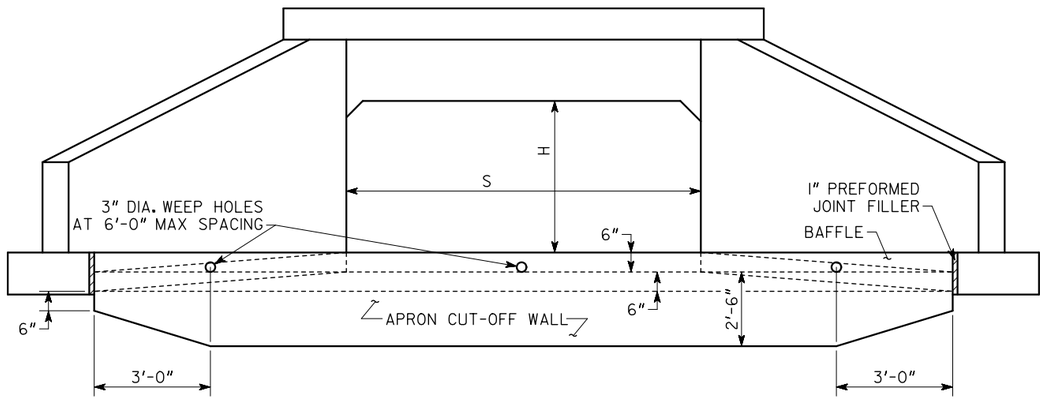

FRONT VIEW OF APRON

S = CLEAR SPAN OF BOX CULVERT
H = CLEAR HEIGHT (RISE) OF BOX CULVERT

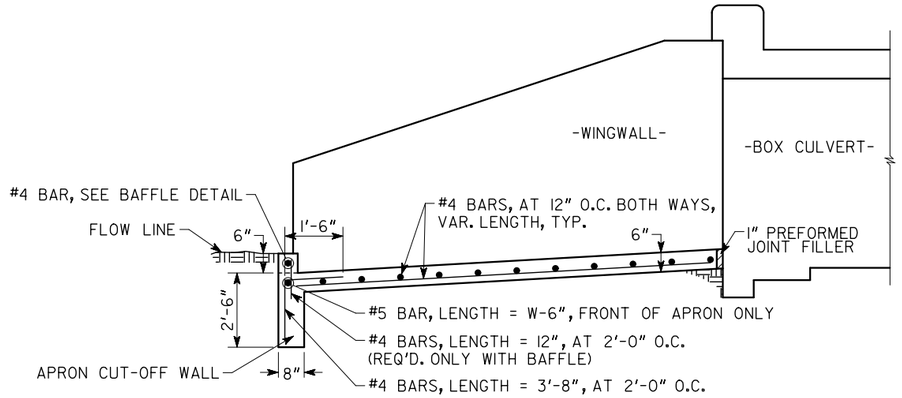

ELEVATION VIEW OF APRON

NOTE: 2" CL MIN. ON ALL SIDES UNLESS OTHERWISE NOTED.

SEE BOX CULVERT STANDARDS FOR DETAILS NOT SHOWN.

END OF EMBEDDED CULVERT APRON (NOT SHOWN) HAS THE SAME MINIMUM BACKFILL AS BARREL.

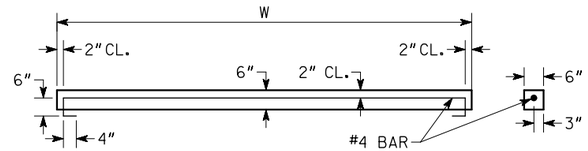

BAFFLE DETAIL

NOTE: CONSTRUCT BAFFLES FROM CLASS AA CONCRETE, MAY BE PRECAST OR CAST IN PLACE.

USE BAFFLES ON APRONS AT OUTLETS OF PIPES AND BOX CULVERTS AND IN PAVED DITCHES OR ELSEWHERE AT LOCATIONS SHOWN IN THE PLANS OR AS DIRECTED BY THE ENGINEER.

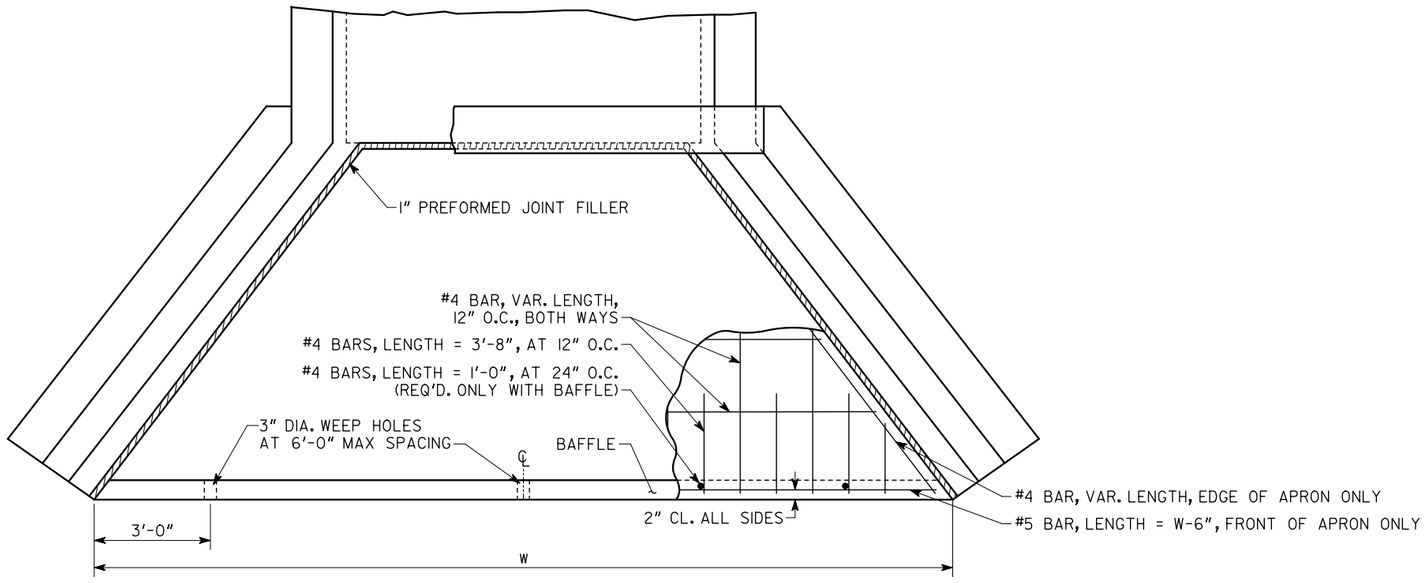

PLAN VIEW OF APRON

GENERAL NOTES

1) SPECIFICATIONS: GEORGIA STANDARD, CURRENT EDITION & SUPPLEMENTS THERETO.

2) CONCRETE APRONS AND BAFFLES ARE REQUIRED AT ALL OUTLETS OF ALL BOX CULVERT DRAINS. APRON IS NOT TO BE OMITTED AT OUTLETS UNLESS THE ENGINEER DETERMINES THAT BEDROCK WILL PREVENT EROSION AND MAKE THE APRON DIFFICULT TO CONSTRUCT. APRONS (WITHOUT BAFFLES) ARE USED AT INLETS ONLY IF PLANS SPECIFY.

3) DETAILS HERESHOWN APPLY TO LRFD STANDARD BOX CULVERTS.

4) ALL CONCRETE SHALL BE CLASS "AA" CONCRETE.

5. SEE SEPARATE STANDARDS FOR DETAILS OF BOX CULVERTS, WINGWALLS, PARAPETS, ETC.

DESIGN DATA

SPECIFICATIONS - AASHTO LRFD BRIDGE DESIGN SPECIFICATIONS, 7TH EDITION, 2014
LOADING - HL- 93.

DEPARTMENT OF TRANSPORTATION
STATE OF GEORGIA

STANDARD

CONCRETE BOX CULVERT APRONS AND BAFFLES DETAIL

NO SCALE — SEPTEMBER 2017

DATE / REVISION / BY

DES. WEI
DRW. EJC
TRA. ___
CHK. EJC

(SUBMITTED) STATE DESIGN POLICY ENGINEER
(APPROVED) Margaret B Pinkelo CHIEF ENGINEER

NUMBER 2406
SHEET 1 OF 2

STATE	PROJECT NUMBER	SHEET NO.	TOTAL SHEETS
GA.			

APRON QUANTITIES FOR CONCRETE BOX CULVERTS

S	H	SINGLE 90° W (FT.)	SINGLE 90° CU.YDS. CONC.	SINGLE 90° LBS. STEEL	SINGLE 75° W (FT.)	SINGLE 75° CU.YDS. CONC.	SINGLE 75° LBS. STEEL	SINGLE 60° W (FT.)	SINGLE 60° CU.YDS. CONC.	SINGLE 60° LBS. STEEL	SINGLE 45° W (FT.)	SINGLE 45° CU.YDS. CONC.	SINGLE 45° LBS. STEEL	DOUBLE 90° W (FT.)	DOUBLE 90° CU.YDS. CONC.	DOUBLE 90° LBS. STEEL	DOUBLE 75° W (FT.)	DOUBLE 75° CU.YDS. CONC.	DOUBLE 75° LBS. STEEL	DOUBLE 60° W (FT.)	DOUBLE 60° CU.YDS. CONC.	DOUBLE 60° LBS. STEEL	DOUBLE 45° W (FT.)	DOUBLE 45° CU.YDS. CONC.	DOUBLE 45° LBS. STEEL	TRIPLE 90° W (FT.)	TRIPLE 90° CU.YDS. CONC.	TRIPLE 90° LBS. STEEL	TRIPLE 75° W (FT.)	TRIPLE 75° CU.YDS. CONC.	TRIPLE 75° LBS. STEEL	TRIPLE 60° W (FT.)	TRIPLE 60° CU.YDS. CONC.	TRIPLE 60° LBS. STEEL	TRIPLE 45° W (FT.)	TRIPLE 45° CU.YDS. CONC.	TRIPLE 45° LBS. STEEL	H	S
4′	3′	11.133	1.27	108	12.831	1.55	127	12.831	1.55	127	16.715	1.95	157	16.133	2.11	170	17.825	2.45	193	17.825	2.45	193	21.715	2.83	222	21.133	2.95	232	22.821	3.35	260	22.821	3.35	260	26.714	3.71	287	3′	4′
	4′	15.433	2.23	178	17.279	2.58	204	17.279	2.58	204	23.174	3.35	262	20.433	3.33	259	22.275	3.75	290	22.275	3.75	290	28.174	4.49	345	25.433	4.43	339	27.273	4.91	375	27.273	4.91	375	33.174	5.63	429	4′	
	5′	17.033	2.65	209	20.324	3.44	267	20.324	3.44	267	26.244	4.16	320	22.033	3.85	297	25.322	4.78	365	25.322	4.78	365	31.243	5.42	413	27.033	5.05	385	30.321	6.12	463	30.321	6.12	463	36.243	6.69	506	5′	
	6′	18.633	3.09	240	22.109	3.99	307	23.553	4.45	340	29.386	5.06	385	23.633	4.39	335	27.107	5.44	413	28.551	5.98	452	34.386	6.45	488	28.633	5.69	431	32.106	6.88	519	33.550	7.52	563	39.386	7.85	589	6′	
5′	3′	12.133	1.44	121	13.830	1.73	140	13.830	1.73	140	17.715	2.13	170	18.133	2.44	195	19.823	2.81	219	19.823	2.81	219	23.714	3.18	248	24.133	3.45	269	25.820	3.89	299	25.820	3.89	299	29.714	4.24	326	3′	5′
	4′	16.433	2.45	194	18.278	2.82	222	18.278	2.82	222	24.174	3.58	279	22.433	3.77	291	24.274	4.21	324	24.274	4.21	324	30.174	4.95	379	28.433	5.10	388	30.272	5.61	426	30.272	5.61	426	36.174	6.32	479	4′	
	5′	18.083	2.89	227	21.324	3.71	286	21.324	3.71	286	27.244	4.41	339	24.033	4.33	333	27.322	5.32	404	27.322	5.32	404	33.243	5.93	450	30.033	5.77	438	33.320	6.93	522	33.320	6.93	522	39.243	7.45	561	5′	
	6′	19.633	3.35	259	23.108	4.28	328	24.553	4.76	362	30.386	5.33	406	25.633	4.91	373	29.107	6.01	455	30.551	6.60	497	36.386	7.01	528	31.633	6.47	487	35.105	7.75	582	36.549	8.43	631	42.386	8.68	651	6′	
	7′	21.233	3.85	297	24.553	4.76	362	27.742	5.91	445	33.653	6.31	476	27.233	5.53	419	30.551	6.60	497	33.740	7.97	596	39.652	8.13	609	33.233	7.20	542	36.549	8.43	631	39.738	10.03	746	45.652	9.95	742	7′	
	8′	22.833	4.38	334	26.398	5.41	411	29.988	6.80	510	36.753	7.37	553	28.833	6.17	465	32.396	7.38	554	35.986	9.02	671	42.753	9.34	697	34.833	7.97	596	38.395	9.35	698	41.985	11.21	833	48.753	11.31	841	8′	
6′	3′	13.133	1.61	133	14.828	1.91	153	14.828	1.91	153	18.715	2.30	183	20.133	2.78	220	21.822	3.17	246	21.822	3.17	246	25.714	3.53	274	27.133	3.95	306	28.818	4.43	339	28.818	4.43	339	32.714	4.77	365	3′	6′
	4′	17.433	2.67	210	19.278	3.05	238	19.278	3.05	238	25.174	3.81	295	24.433	4.21	324	26.273	4.68	358	26.273	4.68	358	32.174	5.41	412	31.433	5.76	436	33.271	6.30	477	33.271	6.30	477	39.174	7.00	529	4′	
	5′	19.033	3.13	244	22.323	3.98	306	22.323	3.98	306	28.244	4.66	358	26.033	4.81	368	29.321	5.86	443	29.321	5.86	443	35.243	6.44	487	33.033	6.49	491	36.320	7.74	581	36.320	7.74	581	42.243	8.21	617	5′	
	6′	20.633	3.61	278	24.108	4.57	350	25.552	5.06	384	31.386	5.61	426	27.633	5.43	411	31.106	6.59	498	32.550	7.21	541	38.386	7.57	569	34.633	7.25	545	38.105	8.62	646	39.549	9.35	698	45.386	9.52	712	6′	
	7′	22.233	4.13	317	25.552	5.06	384	28.742	6.25	471	34.653	6.61	499	29.233	6.09	460	32.550	7.21	541	35.379	8.66	646	41.652	8.74	653	36.233	8.04	603	39.549	9.35	698	42.738	11.06	822	48.652	10.86	809	7′	
	8′	23.833	4.68	355	27.397	5.74	434	30.988	7.17	537	37.753	7.70	577	30.833	6.77	509	34.396	8.04	602	37.986	9.76	725	44.753	10.00	745	37.833	8.87	661	41.394	10.33	769	44.985	12.35	914	51.753	12.30	913	8′	
7′	4′	18.433	2.89	227	20.277	3.28	256	20.277	3.28	256	26.174	4.04	312	26.433	4.65	356	28.272	5.14	392	28.272	5.14	392	34.174	5.86	446	34.433	6.42	485	36.270	7.00	528	36.270	7.00	528	42.174	7.68	579	4′	7′
	5′	20.033	3.37	262	23.323	4.24	325	23.323	4.24	325	29.243	4.92	376	28.033	5.29	403	31.321	6.39	483	31.321	6.39	483	37.243	6.94	524	36.033	7.21	544	39.319	8.54	640	39.319	8.54	640	45.243	8.97	672	5′	
	6′	21.633	3.87	297	25.108	4.86	371	26.552	5.37	407	32.386	5.89	447	29.633	5.95	449	33.106	7.17	540	34.550	7.82	586	40.386	8.12	610	37.633	8.03	601	41.105	9.49	709	42.549	10.27	765	48.386	10.36	773	6′	
	7′	23.233	4.41	337	26.552	5.37	407	29.741	6.60	496	35.653	6.92	521	31.233	6.64	501	34.550	7.82	586	37.739	9.34	696	43.652	9.34	698	39.233	8.88	664	42.549	10.27	765	45.737	12.09	896	51.652	11.77	875	7′	
	8′	24.833	4.98	378	28.397	6.07	458	31.987	7.54	564	38.753	8.03	601	32.833	7.37	552	36.395	8.69	650	39.985	10.50	779	46.753	10.65	793	40.833	9.77	727	44.394	11.32	841	47.984	13.46	995	54.753	13.28	985	8′	
8′	4′	19.433	3.11	242	21.276	3.51	272	21.276	3.51	272	27.174	4.27	328	28.433	5.10	388	30.272	5.61	426	30.272	5.61	426	36.174	6.32	479	37.433	7.08	533	39.269	7.70	579	45.174	8.37	629	4′	8′
	5′	21.033	3.61	280	24.323	4.51	345	24.323	4.51	345	30.243	5.17	395	30.033	5.77	438	33.320	6.93	522	33.320	6.93	522	39.243	7.45	561	39.033	7.93	596	42.319	9.35	699	42.319	9.35	699	48.243	9.73	728	5′	
	6′	22.633	4.13	316	26.107	5.15	392	27.552	5.68	429	33.386	6.17	467	31.633	6.47	487	35.105	7.75	582	36.549	8.43	631	42.386	8.68	651	40.633	8.81	659	44.104	10.36	773	45.548	11.19	832	51.386	11.19	834	6′	
	7′	24.233	4.69	358	27.552	5.68	429	30.741	6.94	521	36.653	7.22	543	33.233	7.20	542	36.549	8.43	631	39.738	10.03	746	45.652	9.95	742	42.233	9.72	726	45.548	11.19	832	48.737	13.12	972	54.652	12.68	942	7′	
	8′	25.833	5.28	399	29.397	6.40	482	32.987	7.91	591	39.753	8.35	625	34.833	7.97	596	38.395	9.35	698	41.985	11.24	833	48.753	11.31	841	43.833	10.66	793	47.393	12.30	913	50.984	14.57	1076	57.753	14.27	1056	8′	
	9′	27.333	5.86	443	31.142	7.11	535	35.233	8.94	668	43.040	9.64	720	36.333	8.72	652	40.140	10.25	764	44.232	12.51	928	52.040	12.83	954	45.333	11.58	860	49.138	13.38	992	53.231	16.08	1187	61.040	16.03	1186	9′	
	10′	28.833	6.46	486	32.666	7.78	582	37.379	9.98	743	46.141	10.93	815	37.833	9.49	706	41.664	11.07	822	46.378	13.77	1019	55.141	14.35	1064	46.833	12.52	928	50.663	14.37	1063	55.377	17.57	1295	64.140	17.77	1313	10′	
9′	4′	20.433	3.33	259	22.275	3.75	290	22.275	3.75	290	28.174	4.49	345	30.433	5.54	421	32.271	6.07	460	32.271	6.07	460	38.174	6.77	513	40.433	7.74	582	42.269	8.40	630	42.269	8.40	630	48.173	9.05	680	4′	9′
	5′	22.033	3.85	297	25.322	4.78	365	25.322	4.78	365	31.243	5.42	413	32.033	6.25	473	35.320	7.47	561	35.320	7.47	561	41.243	7.96	598	42.033	8.65	649	45.318	10.15	758	45.318	10.15	758	51.243	10.49	783	5′	
	6′	23.633	4.39	335	27.107	5.44	413	28.551	5.98	452	34.386	6.45	488	33.633	6.99	525	37.105	8.33	625	38.549	9.05	676	44.386	9.24	692	43.633	9.59	715	47.104	11.23	836	48.548	12.11	899	54.386	12.03	895	6′	
	7′	25.233	4.97	378	28.551	5.98	452	31.741	7.28	546	37.653	7.52	565	35.233	7.76	583	38.549	9.05	676	41.738	10.72	796	47.652	10.56	786	45.233	10.56	787	48.548	12.11	899	51.737	14.15	1047	57.652	13.59	1008	7′	
	8′	26.833	5.58	421	30.396	6.72	506	33.987	8.28	617	40.753	8.68	649	36.833	8.57	640	40.394	10.00	746	43.985	11.98	887	50.753	11.97	889	46.833	11.56	858	50.393	13.29	985	53.983	15.68	1157	60.753	15.25	1129	8′	
	9′	28.333	6.17	466	32.141	7.46	561	36.233	9.34	697	44.040	9.99	747	38.333	9.35	698	42.139	10.95	815	46.231	13.30	985	54.040	13.54	1005	48.333	12.53	930	52.138	14.43	1069	56.230	17.27	1274	64.040	17.09	1264	9′	
	10′	29.833	6.80	510	33.666	8.14	608	38.379	10.40	774	47.141	11.31	842	39.833	10.16	755	43.664	11.81	875	48.378	14.62	1081	57.140	15.11	1119	49.833	13.53	1001	53.663	15.47	1143	58.377	18.83	1387	67.140	18.91	1396	10′	
10′	4′	21.433	3.55	275	23.275	3.98	306	23.275	3.98	306	29.174	4.72	362	32.433	5.98	453	34.271	6.54	494	34.271	6.54	494	40.174	7.23	546	43.433	8.40	630	45.268	9.09	681	45.268	9.09	681	51.173	9.74	729	4′	10′
	5′	23.033	4.09	315	26.322	5.05	385	26.322	5.05	385	32.243	5.68	432	34.033	6.73	508	37.319	8.00	600	37.319	8.00	600	43.243	8.46	635	45.033	9.37	702	48.318	10.96	817	48.318	10.96	817	54.243	11.25	839	5′	
	6′	24.633	4.65	355	28.107	5.72	434	29.551	6.29	474	35.386	6.73	508	35.633	7.51	563	39.105	8.91	667	40.549	9.66	720	46.386	9.80	732	46.633	10.37	773	50.104	12.10	900	51.548	13.03	966	57.386	12.87	956	6′	
	7′	26.233	5.25	399	29.551	6.29	474	32.740	7.63	571	38.652	7.83	587	37.233	8.32	624	40.549	9.66	720	43.738	11.41	846	49.652	11.17	831	48.233	11.40	849	51.548	13.03	966	54.736	15.19	1122	60.652	14.50	1075	7′	
	8′	27.833	5.87	443	31.396	7.05	530	34.986	8.65	645	41.753	9.01	673	38.833	9.17	684	42.394	10.66	793	45.984	12.72	941	52.753	12.62	937	49.833	12.46	924	53.393	14.27	1056	56.983	16.79	1238	63.753	16.24	1200	8′	
	9′	29.333	6.49	489	33.141	7.81	586	37.233	9.73	725	45.040	10.35	772	40.333	9.99	745	44.139	11.64	865	48.231	14.09	1043	56.040	14.25	1057	51.333	13.49	999	55.138	15.48	1145	59.230	18.46	1360	67.039	18.16	1342	9′	
	10′	30.833	7.14	535	34.666	8.51	635	39.379	10.82	804	48.141	11.69	870	41.833	10.84	805	45.664	12.54	929	50.378	15.46	1142	59.140	15.87	1174	52.833	14.54	1075	56.663	16.57	1223	61.377	20.10	1479	70.140	20.05	1479	10′	
	11′	32.433	7.86	588	36.551	9.41	701	41.626	12.02	890	51.572	13.25	982	43.433	11.77	874	47.550	13.69	1012	52.625	16.95	1249	62.572	17.73	1308	54.433	15.69	1159	58.549	17.96	1324	63.624	21.88	1608	73.572	22.21	1634	11′	
	12′	34.033	8.61	644	37.995	10.12	751	43.873	13.28	981	54.642	14.77	1092	45.033	12.74	945	48.994	14.58	1076	54.872	18.50	1361	65.642	19.53	1438	56.033	16.88	1246	59.993	19.04	1400	65.871	23.72	1740	76.642	24.29	1785	12′	

NOTE: THE QUANTITIES SHOWN ABOVE ARE FOR OUTLET END APRONS WITH BAFFLES. IF APRONS ARE NEEDED AT INLETS (NOT USUAL), REDUCE THE ABOVE QUANTITIES FOR NO. BAFFLES AS FOLLOWS:
CONCRETE: REDUCE QUANTITY BY W x 0.0092 CU.YDS/FT.
STEEL: REDUCE QUANTITY BY W x 0.334 LBS/LIN.FT.

S = CLEAR SPAN OF BOX CULVERT
H = CLEAR HEIGHT (RISE) OF BOX CULVERT

DEPARTMENT OF TRANSPORTATION
STATE OF GEORGIA

STANDARD

CONCRETE BOX CULVERT APRONS AND BAFFLES DETAIL

NO SCALE — SEPTEMBER 2017

DATE | REVISION | BY

DES. WEI
DRW. EJC
TRA. ____
CHK. EJC

(SUBMITTED) STATE DESIGN POLICY ENGINEER
(APPROVED) Margaret B Pinelo CHIEF ENGINEER

NUMBER 2406
SHEET 2 OF 2

GDOT Georgia Department of Transportation | P. I. No. XXXXXXX

CULVERT SIZE		DESIGN I-A 2 FT. MINIMUM COVER					DESIGN I-B 3 FT. MINIMUM COVER					CULVERT SIZE	
CLEAR SPAN (FT.)	CLEAR HEIGHT (FT.)	T (INCHES)	MINIMUM AREAS OF CIRCUMFERENTIAL REINFORCING STEEL (SQ.IN.PER LIN.FT.)			MAXIMUM FILL HEIGHTS (FEET)	MINIMUM AREA OF CIRCUMFERENTIAL REINFORCING STEEL (SQ. IN. PER LIN.FT.)			MAXIMUM FILL HEIGHTS (FEET)	T (INCHES)	CLEAR HEIGHT (FT.)	CLEAR SPAN (FT.)
S	H		A_{S1}	A_{S2}	A_{S4}		A_{S1}	A_{S2}	A_{S4}			H	S
4′	3	6	0.21	0.27	0.12	16	0.13	0.18	0.12	10	6	3	4′
	4	6	0.18	0.30	0.12	16	0.12	0.19	0.12	10	6	4	
	5	6	0.24	0.33	0.14	16	0.15	0.23	0.14	10	6	5	
	6	7	0.27	0.37	0.17	16	0.20	0.27	0.17	10	7	6	
5′	3	6	0.26	0.29	0.14	16	0.17	0.21	0.14	10	6	3	5′
	4	6	0.24	0.33	0.14	16	0.16	0.23	0.14	10	6	4	
	5	6	0.20	0.35	0.14	16	0.14	0.25	0.14	10	6	5	
	6	7	0.25	0.39	0.17	16	0.18	0.29	0.17	10	7	6	
6′	3	7	0.32	0.33	0.17	16	0.23	0.23	0.17	10	7	3	6′
	4	7	0.27	0.37	0.17	16	0.20	0.27	0.17	10	7	4	
	5	7	0.25	0.39	0.17	16	0.18	0.29	0.17	10	7	5	
	6	7	0.23	0.41	0.17	16	0.17	0.30	0.17	10	7	6	
7′	4	8	0.35	0.41	0.19	16	0.25	0.27	0.19	10	8	4	7′
	5	8	0.31	0.44	0.19	16	0.23	0.29	0.19	10	8	5	
	6	8	0.28	0.42	0.19	14	0.21	0.34	0.19	10	8	6	
	7	8	0.26	0.44	0.19	14	0.19	0.36	0.19	10	8	7	
8′	4	8	0.43	0.40	0.19	10	0.33	0.30	0.19	8	8	4	8′
	5	8	0.38	0.43	0.19	10	0.30	0.33	0.19	8	8	5	
	6	8	0.35	0.47	0.19	10	0.27	0.35	0.19	8	8	6	
	7	8	0.33	0.50	0.19	10	0.25	0.38	0.19	8	8	7	
	8	8	0.31	0.53	0.19	10	0.24	0.43	0.19	8	8	8	
9′	4	9	0.47	0.45	0.22	10	0.38	0.38	0.22	8	9	4	9′
	5	9	0.43	0.45	0.22	10	0.35	0.39	0.22	8	9	5	
	6	9	0.40	0.48	0.22	10	0.32	0.42	0.22	8	9	6	
	7	9	0.37	0.52	0.22	10	0.30	0.45	0.22	8	9	7	
	8	9	0.35	0.54	0.22	10	0.28	0.47	0.22	8	9	8	
	9	9	0.33	0.57	0.22	10	0.27	0.49	0.22	8	9	9	
	10	10	0.35	0.61	0.24	10	0.30	0.55	0.24	8	10	10	
10′	4	10	0.50	0.46	0.24	10	0.44	0.42	0.24	8	10	4	10′
	5	10	0.47	0.46	0.24	10	0.41	0.42	0.24	8	10	5	
	6	10	0.44	0.50	0.24	10	0.38	0.45	0.24	8	10	6	
	7	10	0.41	0.53	0.24	10	0.35	0.48	0.24	8	10	7	
	8	10	0.38	0.56	0.24	10	0.33	0.51	0.24	8	10	8	
	9	10	0.36	0.60	0.24	10	0.32	0.53	0.24	8	10	9	
	10	10	0.35	0.61	0.24	10	0.30	0.55	0.24	8	10	10	

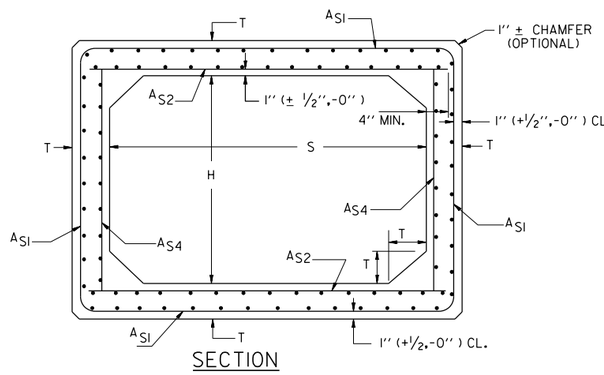

SECTION

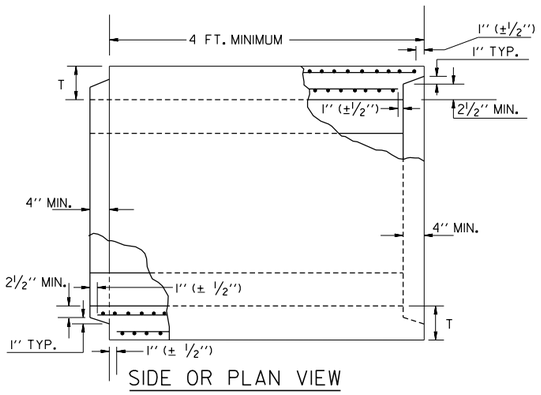

SIDE OR PLAN VIEW

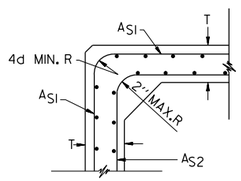

DESIGN OPTION

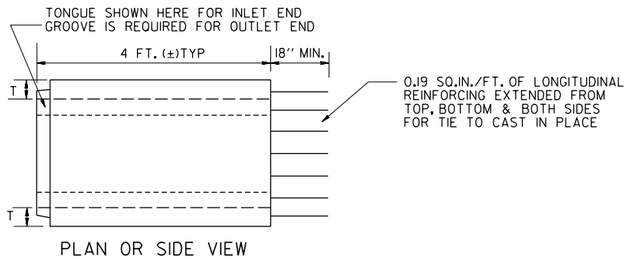

PLAN OR SIDE VIEW

CONNECTOR BOX TYPE C
(USE FOR CONNECTION TO CAST-IN-PLACE)

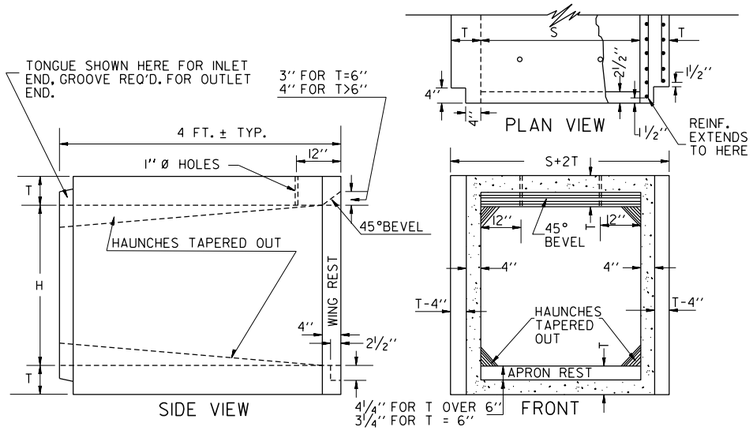

CONNECTOR BOX TYPE P
(USE FOR CONNECTION TO PRECAST ENDS)

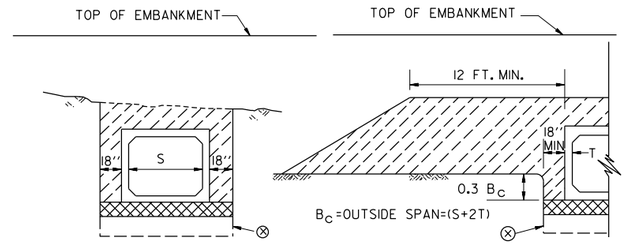

MINIMUM TRENCH DEPTH = 0.3 B_C + BEDDING DEPTH

- 6″ MIN. DEPTH OF FOUNDATION BACKFILL MATERIAL TYPE II FOR WET AREAS OR 3″ MIN. DEPTH FOUNDATION BACKFILL MATERIAL TYPE I OTHERWISE. TYPE I AND II MATERIAL BOTH MAY BE USED IF SPECIFIED. CLASS I SOIL SHALL BE REQUIRED FOR TYPE I BACKFILL MATERIAL.

- NORMAL BACKFILL COMPACTED IN 6″ LAYERS BROUGHT UP EVENLY ON BOTH SIDES OF CULVERT FROM TOP OF BEDDING TO MINIMUM REQUIRED COVER.

⊗ FOR AN INCOMPRESSIBLE FOUNDATION, INCREASE TRENCH UNDER BOX TO 12″ MINIMUM, WHERE AN UNSTABLE MATERIAL IS ENCOUNTERED, ADDITIONAL EXCAVATION AND BACKFILLING TO DEPTHS AND WIDTHS SPECIFIED BY THE ENGINEER IS REQUIRED.

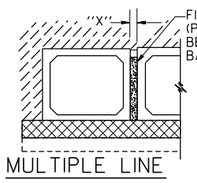

MULTIPLE LINE

TYPICAL FILLERS	
MATERIALS ALTERNATES	SPACE "X"
GROUT	2″ ±
CL. B CONC.	4″ ±

NOTE: PAYMENT FOR CULVERT INCLUDES FILLER.

THE DIMENSION "X" SHALL BE COMPATIBLE WITH CULVERT END TREATMENT AND APRON WIDTHS. SPACERS SHALL BE USED BETWEEN BOXES IF BACKFILLED BEFORE FILLER SETS UP.

NOTE:
A CULVERT COMBINATION HAVING A TOTAL CLEAR SPAN & HEIGHT EQUAL TO OR EXCEEDING THAT SPECIFIED MAY BE SUBSTITUTED. EXAMPLE: A TRIPLE 6′x6′ MAY BE SUBSTITUTED FOR A DOUBLE 9′x6′ OR VICE VERSA.

GENERAL NOTES:

1. SPECIFICATIONS: GA. STANDARD, CURRENT EDITION, AND SUPPLEMENTS THERETO, CONCRETE SHALL CONFORM TO SECTION 843, 5000 P.S.I. MINIMUM.
2. REINFORCING REQUIREMENTS NOT SHOWN SHALL BE ACCORDING TO A.A.S.H.T.O. M-259, MINIMUM CLEARANCE FOR CIRCUMFERENTIAL REINFORCMENT SHALL BE 1INCH, WITH LESS THAN 1INCH OF CLEARANCE BEING CAUSE FOR REJECTION.
3. ALL JOINTS BETWEEN PRECAST SECTIONS SHALL BE TONGUE & GROOVE WITH JOINT MATERIAL. JOINTS BETWEEN CAST-IN-PLACE AND PRECAST SECTIONS SHALL HAVE LONGITUDINAL STEEL EXTENDING FROM TOP, BOTTOM AND BOTH SIDE SLABS OF THE PRECAST BOX TIED TO THE CAST-IN-PLACE REINFORCEMENT.
4. CULVERTS LARGER THAN THE SPECIFIED SIZE MAY BE SUBSTITUTED WITH PAYMENT BEING BASED UPON THE SPECIFIED SIZE RATHER THAN THE SUBSTITUTION, SUCH A SUBSTITUTION MUST BE APPROVED BY THE ENGINEER, MINIMUM COVER MUST BE RETAINED AND NO ADVERSE EFFECTS PRODUCED.
5. ALTERNATES: CAST-IN-PLACE BOX CULVERTS OR OTHER APPROVED PRECAST DESIGNS.
6. LOADING: HS-20 AND ANY FILL HEIGHTS BETWEEN THE MINIMUM AND MAXIMUM SHOWN.
7. ONLY ONE DESIGN OF PRECAST BOX CULVERT IS TO BE USED FOR ANY INSTALLATION.

DEPARTMENT OF TRANSPORTATION
STATE OF GEORGIA

STANDARD
PRECAST BOX CULVERT BARRELS
4′x3′ THRU 10′x10′
SINGLE & MULTIPLE LINES

NOT TO SCALE | REDRAWN JULY 2024 | MAR. 1985

DATE: 6-27-85 — MADE 4″ JT. DEPTH MIN — REVISION

BY: R.M.U.

DES. R.M.U. | DRW. R.M.U. | TRA. G.M.E. | CHK. R.K.C.

(SUBMITTED) Floyd E. Hawley — STATE ROAD & AIRPORT DESIGN ENGR

(APPROVED) H.D. Ross — STATE HIGHWAY ENGINEER

NUMBER 2530P

GDOT Georgia Department of Transportation | P. I. No. XXXXXXX

ALTERNATE (APPLICABLE TO EITHER NORMAL OR SKEWED CULVERTS)

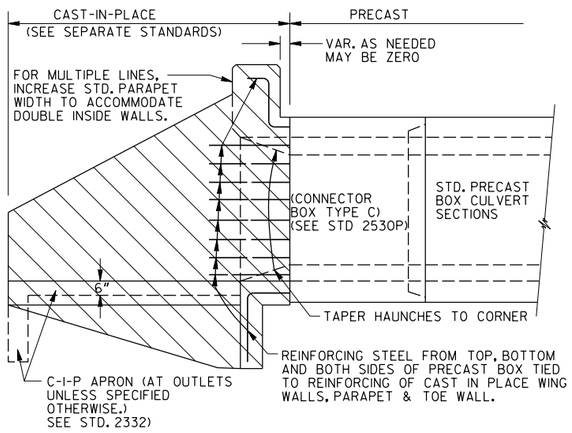

ALTERNATE ENDS FOR SKEWED PRECAST CULVERT

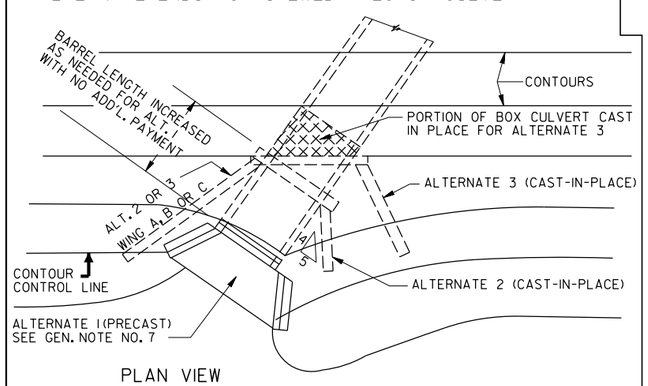

PLAN VIEW

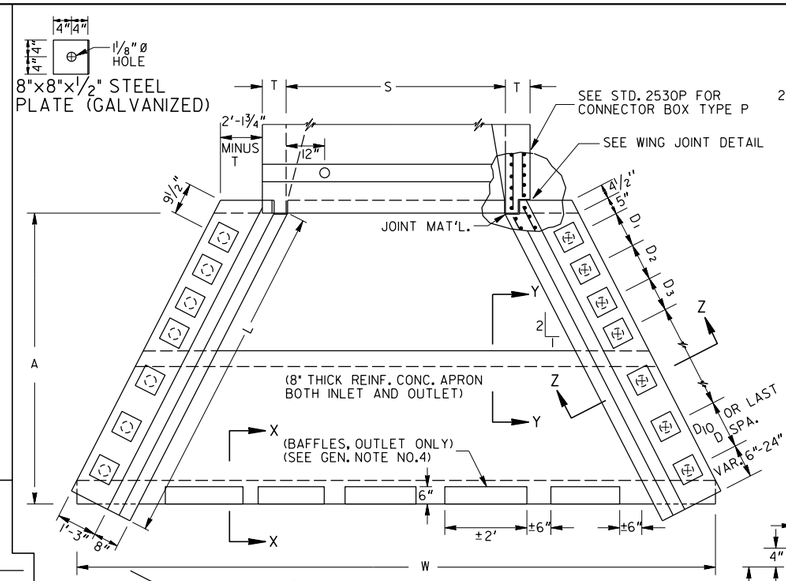

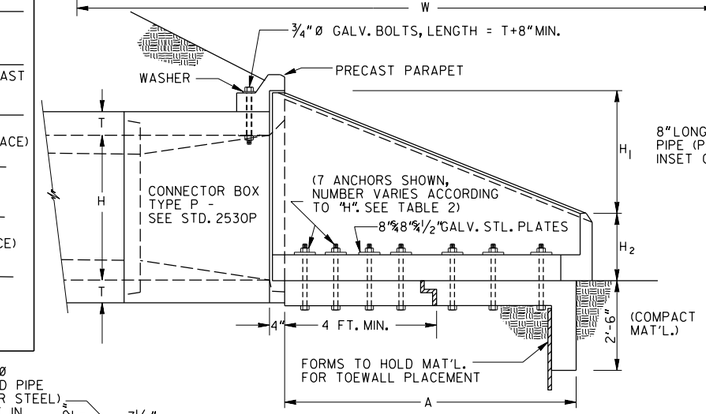

NOTE: EACH PARAPET SHALL BE BOLTED TO BOX WITH TWO - ¾" Ø GALV. WASHERS WITH EACH BOLT (FURNISHED BY MANUFACTURER).

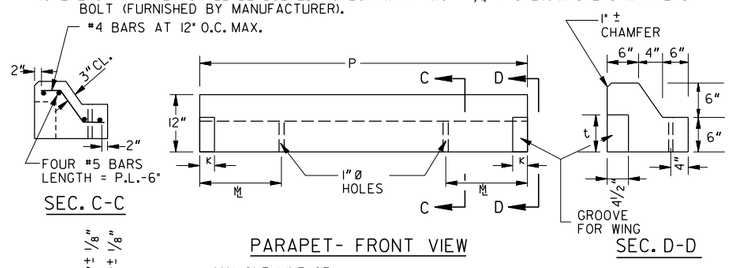

PARAPET- FRONT VIEW

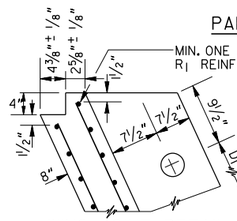

WING JOINT DETAIL

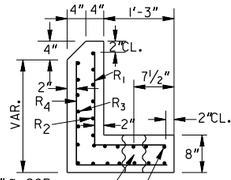

SECTION THRU WING

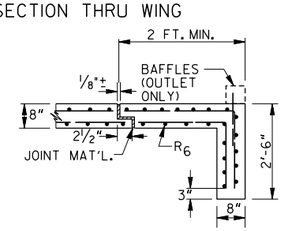

SECTION X-X

TABLE 1- PARAPET DIMENSIONS				
S	K	M	t	P
4'	2"	1'-6"	9"	5'-0"
5'	2"	1'-6"	8"	6'-0"
6'	3"	1'-7"	7"	7'-2"
7'	4"	1'-8"	7"	8'-4"
8'	4"	1'-8"	7"	9'-4"
9'	5"	1'-9"	6"	10'-6"
10'	6"	1'-10"	5"	11'-8"

TABLE 2 - WINGWALL DIMENSIONS, ANCHOR SPACINGS, WINGWALL & APRON REINFORCING

CULVERT HEIGHT (RISE)	APRON	WINGWALL (±1") DIMENSIONS			MAX. SPACINGS (INCHES) FOR WINGWALL TO APRON ANCHOR CONNECTIONS EACH WING. SEE NOTE #3 (±1/2")										▼ STEEL AREAS SQ.IN./LIN.FT.	
H	A	L	H_1	H_2	D_1	D_2	D_3	D_4	D_5	D_6	D_7	D_8	D_9	D_{10}	R_1	R_2
3'	6'	6'-8"	2'-8"	1'-6"	48"	66"									0.19	0.19
4'	8'	9'-2"	3'-8"	1'-6"	48"	66"									0.19	0.19
5'	8'	9'-2"	3'-8"	2'-6"	48"	66"									0.19	0.19
6'	12'	13'-4"	5'-4"	1'-10"	31"	48"	66"								0.20	0.19
7'	12'	13'-4"	5'-4"	2'-10"	20"	31"	31"	48"	66"						0.32	0.19
8'	16'	18'-4"	7'-4"	1'-10"	15"	20"	20"	31"	48"	66"					0.48	0.19
9'	16'	18'-4"	7'-4"	2'-10"	12"	12"	15"	15"	20"	20"	31"	48"	66"		0.68	0.19
10'	16'	18'-4"	7'-4"	3'-10"	12"	12"	12"	12"	15"	15"	20"	20"	31"	48"	0.93	0.19

▼STEEL AREAS FOR R_3, R_4, R_5 & R_6 SHALL BE THE SAME AS FOR R_2.

TABLE 3- ✳ TOEWALL WIDTHS		
S	H	W(±1/4")
4'	3	13'-7½"
	4	15'-7½"
	5	15'-7½"
	6	19'-7½"
5'	3	14'-7½"
	4	16'-7½"
	5	16'-7½"
	6	20'-7½"
6'	3	15'-7½"
	4	17'-7½"
	5	17'-7½"
	6	21'-7½"
7'	4	18'-7½"
	5	18'-7½"
	6	22'-7½"
	7	22'-7½"
8'	4	19'-7½"
	5	19'-7½"
	6	23'-7½"
	7	23'-7½"
	8	27'-7½"
9'	4	20'-7½"
	5	20'-7½"
	6	24'-7½"
	7	24'-7½"
	8	28'-7½"
	9	28'-7½"
	10	28'-7½"
10'	4	21'-7½"
	5	21'-7½"
	6	25'-7½"
	7	25'-7½"
	8	29'-7½"
	9	29'-7½"
	10	29'-7½"

✳ NOTE: WIDTHS ARE FOR SINGLE LINES; FOR MULTIPLE LINES ADD S + 2T + "X" FOR EACH ADDITIONAL LINE; WHERE S= CLEAR SPAN, T= WALL THICKNESS, & "X" = SPACE BETWEEN LINES.

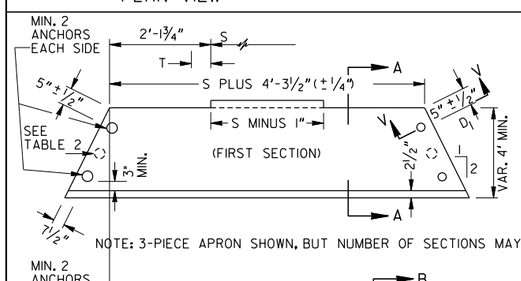

NOTE: 3-PIECE APRON SHOWN, BUT NUMBER OF SECTIONS MAY VARY.

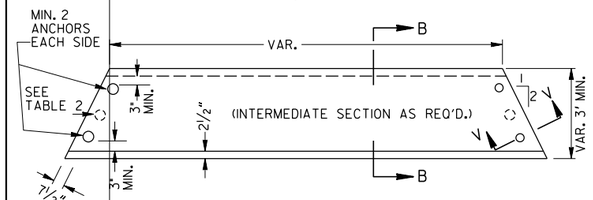

NOTE: ENTIRE APRON AND TOEWALL MAY BE MONOLITHIC SECTION.

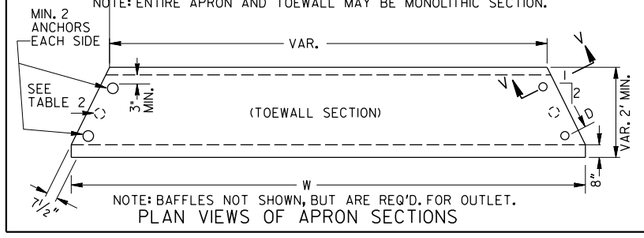

NOTE: BAFFLES NOT SHOWN, BUT ARE REQ'D. FOR OUTLET.

PLAN VIEWS OF APRON SECTIONS

8"LONG, 4" Ø CORRUGATED PIPE (PLASTIC OR STEEL) INSET CAST IN

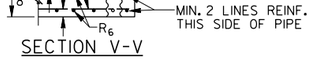

SECTION V-V

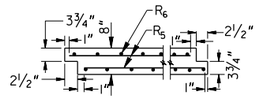

SEC. A-A

SEC. B-B

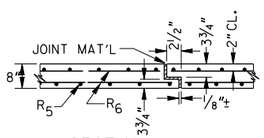

SECTION Y-Y

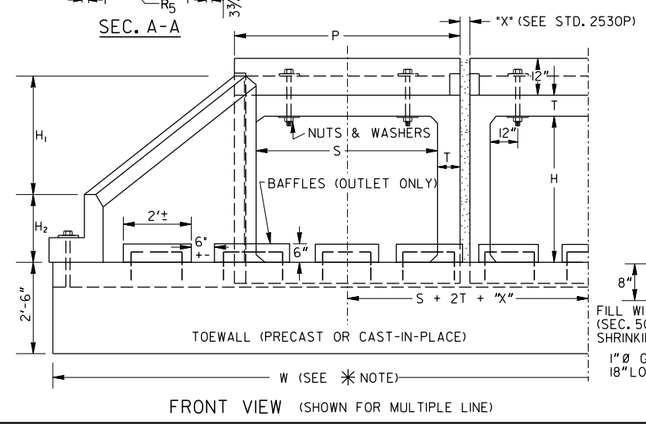

FRONT VIEW (SHOWN FOR MULTIPLE LINE)

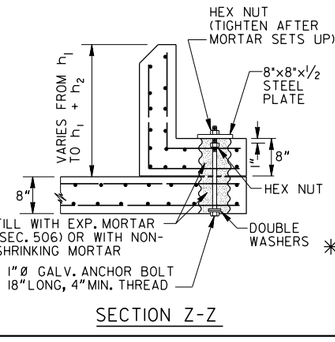

SECTION Z-Z

GENERAL NOTES:

1. SPECIFICATION: GA. STANDARD, CURRENT EDITION & SUPPLEMENTS THERETO.
2. MATERIALS FOR PRECAST PARAPETS, PRECAST WINGWALLS AND PRECAST APRONS SHALL BE 5000 P.S.I. CONCRETE (SEC. 500) AND WELDED WIRE FABRIC OR GRADE 60 REBARS. CAST-IN-PLACE CONSTRUCTION SHALL BE CLASS "A" CONCRETE AND GRADE 40 REBARS.
3. ALL PRECAST WINGWALLS (BOTH INLET & OUTLET) REQUIRE 8" THICK REINFORCED CONCRETE APRONS FOR ANCHOR CONNECTIONS. APRONS MAY BE PRECAST OR CAST IN PLACE. SPACINGS (IN TABLE 2) FOR WINGWALL TO APRON CONNECTIONS ARE MAXIMUM AND MAY BE REDUCED DUE TO WING LENGTH, APRON JOINTS, ETC. EACH APRON SECTION MUST HAVE A MINIMUM OF 2 CONNECTIONS ON EACH SIDE OR AS REQUIRED BY TABLE 2, WHICHEVER IS MORE.
4. OUTLET BAFFLES SHALL BE CL.A CONCRETE MIN. REINFORCED WITH NO.4 REBARS, BAFFLES MAY BE FIELD CAST ONTO NO.4 REBARS GROUTED 6" MIN. INTO APRON OR PRECAST BAFFLES MAY BE SECURED TO APRON BY GROUTING BARS EXPOSED FROM BAFFLES INTO APRON 6" MIN. OR SECURED WITH NO. 4 GALV. EXPANSION ANCHOR BOLTS. 2 DOWEL CONNECTIONS OR 2 ANCHORS SHALL BE REQUIRED FOR EACH SEPARATE BAFFLE OR BAFFLES MAY BE CONSTRUCTED MONOLITHIC WITH APRON.
5. SEE STANDARD 2530P FOR DETAILS OF PRECAST BOX CULVERTS AND CONNECTOR BOXES TYPE P & TYPE C.
6. LIFTING HOLES AND HANDLING DEVICES SHALL BE ACCORDING TO GA.STD. SPECIFICATIONS AND MAY VARY PER MANUFACTURER. PRECAST SECTIONS ARE NOT TO BE LIFTED BY OR THRU THE PIPE SLEEVE INSETS.
7. PRECAST ENDS ARE STANDARD ALTERNATES FOR SINGLE OR FOR MULTIPLE LINE PRECAST BOX CULVERT BARRELS NORMAL TO THE ROADWAY. SKEWED INSTALLATIONS MAY HAVE PRECAST ENDS WHERE ROADSIDE GEOMETRICS ARE COMPATIBLE. THE ALLOWANCE OF PRECAST ENDS WITH SKEWED PRECAST BARRELS, EITHER SINGLE OR MULTIPLE LINE, SHALL BE AS SHOWN IN THE PLANS OR APPROVED BY THE ENGINEER FOR A GIVEN LOCATION. CAST-IN-PLACE ENDS (SEE SEPARATE STANDARDS) SHALL BE USED FOR EITHER SKEWED OR NON-SKEWED PRECAST BARRELS WHERE PRECAST ENDS ARE NOT USED.

DEPARTMENT OF TRANSPORTATION
STATE OF GEORGIA

STANDARD
PRECAST BOX CULVERT ENDS
WINGWALLS, PARAPETS, TOEWALLS & APRONS

NOT TO SCALE | REDRAWN JULY 2024 | MAR. 1985

DATE / REVISION / BY

DES. R.M.U. (SUBMITTED) Harold B. Hardy — STATE ROAD & AIRPORT DESIGN ENGR.
DRW. R.M.U.
TRA. G.M.E.
CHK. R.K.C. (APPROVED) Harold Reese — STATE HIGHWAY ENGINEER

NUMBER 2535P

STATE	PROJECT NUMBER	SHEET NO.	TOTAL SHEETS
GA.			

NOTE: PLACE YEAR BRIDGE IS BUILT ON EACH RIGHT-HAND END POST AS SEEN BY APPROACHING TRAFFIC. FORM NUMERALS WITH APPROVED METAL DIES. NUMERAL GROUP, ETC., TO BE ON GRADE.

NOTE: USE EXTREME CARE IN PLACING FORMED HOLES TO CONFORM TO PATTERN EXACTLY.

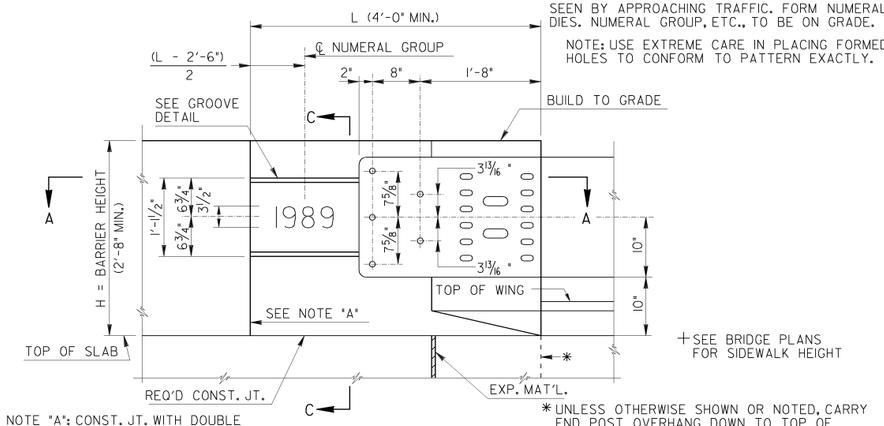

+ SEE BRIDGE PLANS FOR SIDEWALK HEIGHT

NOTE "A": CONST. JT. WITH DOUBLE CHAMFER V-GROOVE, ¾"

* UNLESS OTHERWISE SHOWN OR NOTED, CARRY END POST OVERHANG DOWN TO TOP OF PAVING REST ELEVATION.

FRONT ELEVATION - END POST

BARRIER
SCALE: 1"=1'-0"

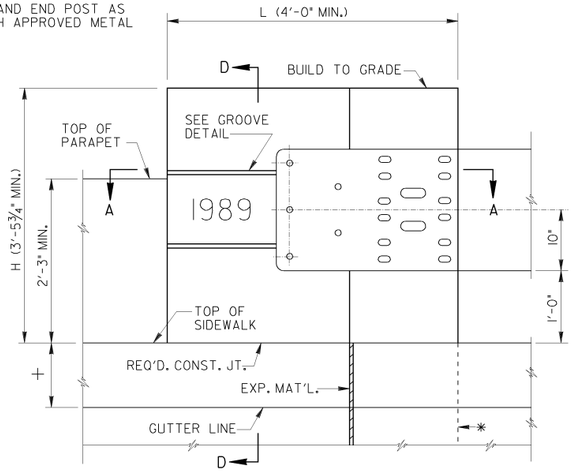

FRONT ELEVATION - END POST

SIDEWALK AND PARAPET
SCALE: 1" = 1'-0"

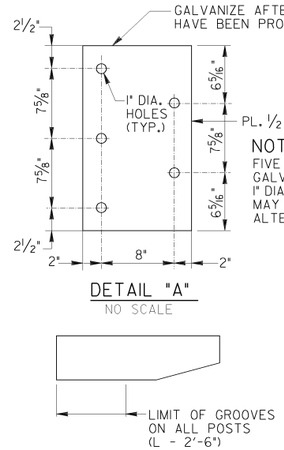

DETAIL "A"

NO SCALE

DETAIL "B"

NO SCALE

PL. ½ x 12 x 1'-8¼"

NOTE :
FIVE 3" x ½" x 3" GALV. PLATES WITH 1" DIA. HOLES CENTERED MAY BE USED AS AN ALTERNATE

MATERIALS	
ITEM	SPECIFICATIONS
GUARDRAIL	A.A.S.T.H.O. SPECIFICATION M 180
½" PLATE	A.S.T.M. DESIGNATIONS A-36
NUTS & BOLTS	A.S.T.M. DESIGNATION A-307
WASHERS	MEDIUM STEEL
GALVANIZING	A.S.T.M. A-153

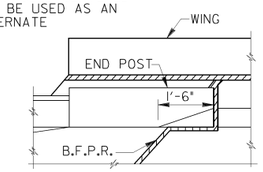

BARRIER

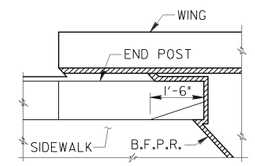

SIDEWALK AND PARAPET

TYPICAL SKEWED END DETAIL

SCALE: ½" = 1'-0"

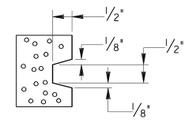

SEE DETAIL "B" FOR LIMITS OF GROOVE

GROOVE DETAIL

HALF SCALE

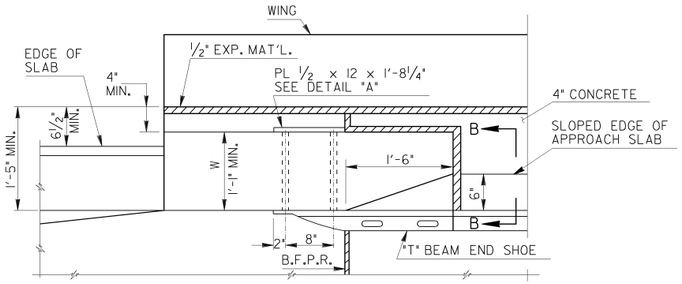

PLAN - END POST

BARRIER
SCALE: 1"=1'-0"

⊛ BOLT LENGTH SHALL BE OF SUFFICIENT LENGTH TO PROVIDE FOR FULL NUT ATTACHMENT. W + 3" DIMENSION SHALL BE FIELD VERIFIED PRIOR TO ORDERING BOLTS TO INSURE PROPER LENGTH.

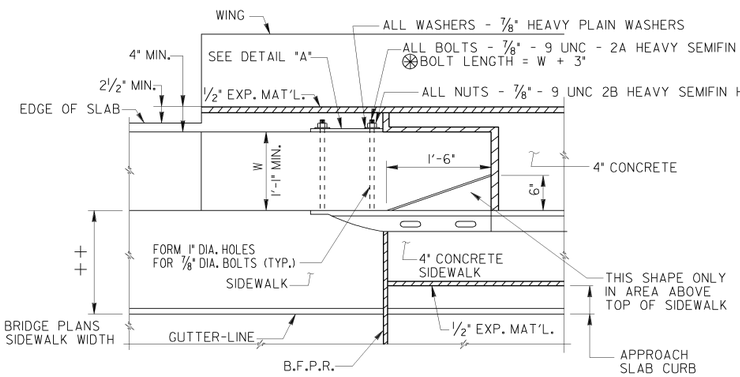

PLAN - END POST

SIDEWALK AND PARAPET
SCALE: 1" = 1'-0"

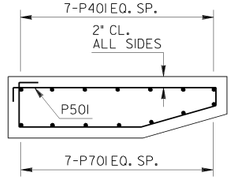

SECTION A-A

SCALE: ¾" = 1'-0"

NOTE: IF END POST IS ON SUBSTRUCTURE, SEE BRIDGE PLANS FOR BARS THAT DOWEL FROM BELOW.

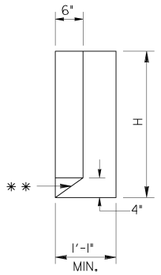

** SLOPED PORTION OF END POST TO BE POURED MONOLITHIC WITH END POST

SECTION B-B

SCALE: ¾" = 1'-0"



NO. BARS REQ'D		
MARK	BARRIER	SIDEWALK
P401	7	7
P501	6	6
P701	7	7

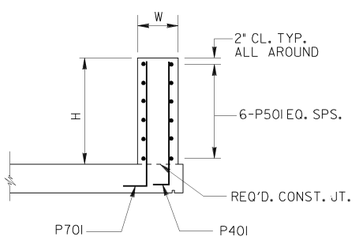

SECTION C-C

SCALE: ½" = 1'-0"

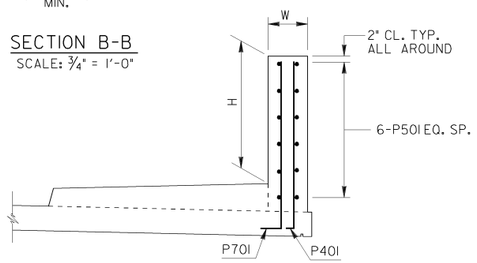

SECTION D-D

SCALE: ½" = 1'-0"

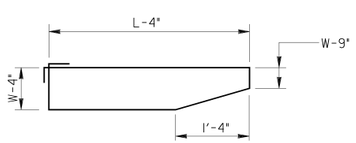

P501

FOR END POST ON SUPERSTRUCTURE:
A = H - 4" + SLAB DEPTH (FOR BARRIER)
A = H - 4" + SIDEWALK DEPTH + SLAB DEPTH (FOR SIDEWALK AND PARAPET)
B = 1'-0"

FOR END POST ON SUBSTRUCTURE:
A = H - 2"
B = 0"

NOTE: ROTATE P701 AND P401 AS NECESSARY TO MAINTAIN 2" MIN. CL. IN CONCRETE.

GENERAL NOTES

SPECIFICATIONS - GEORGIA STANDARD.

LOCATION - ALL END POSTS UNLESS NOTED ON BRIDGE PLANS.

CHAMFER - CHAMFER ALL EXPOSED EDGES ¾".

GALVANIZING - ALL METAL PARTS SHALL BE GALVANIZED AFTER FABRICATION.

PAYMENT FOR MISCELLANEOUS HARDWARE - COST OF ½" PLATE AND MISCELLANEOUS HARDWARE SHALL BE INCLUDED IN THE PRICES BID FOR CONTRACT ITEMS.

PAYMENT FOR THE END POST - IF END POST IS A PORTION OF THE SUBSTRUCTURE, CONCRETE AND REINFORCEMENT ARE COMPUTED AND INCLUDED IN THE END BENT QUANTITIES.
IF END POST IS A PORTION OF THE SUPERSTRUCTURE, CONCRETE AND REINFORCEMENT ARE COMPUTED AND INCLUDED IN THE END SPAN QUANTITIES.

RESPONSIBILITY - WHEN THE BRIDGE CONTRACT IS SEPARATE FROM THE CONTRACT CONTAINING THE APPROACHING GUARDRAIL, THE BRIDGE CONTRACTOR SHALL ONLY BE RESPONSIBLE FOR THE CONSTRUCTION OF THE END POSTS AND FORMING OF THE 1" DIAMETER BOLT HOLES. THE CONTRACT CONTAINING THE APPROACHING GUARDRAIL SHALL BE RESPONSIBLE FOR FURNISHING AND INSTALLING THE SPECIAL END SHOE, PLATE, NUTS, WASHERS, AND BOLTS.

DIMENSIONS - FOR DIMENSIONS "L", "H", AND "W" AND OTHER DIMENSIONS, SEE BRIDGE PLANS.

END POST - END POST TO BE CONSTRUCTED AFTER HANDRAIL IS IN PLACE.
END POST TO BE CONSTRUCTED AFTER BARRIER IS CONSTRUCTED WHEN NO HANDRAIL IS USED.

DEPARTMENT OF TRANSPORTATION
STATE OF GEORGIA

DATE	REVISION	BY
9-30-02	REV. TRANSITION	G.J.P.
6-30-98	REDRAWN	

STANDARD

END POST AND END POST GUARDRAIL ATTACHMENT DETAILS

SCALE: AS SHOWN — MAY 1989

DESIGNED H.W.C.
DRAWN E.R.M.
CHECKED H.W.C.

(SUBMITTED) James A. Kemp
STATE ROAD & AIRPORT DESIGN ENGINEER
(APPROVED) Frank L. Edwards
CHIEF ENGINEER

NUMBER 3054

GDOT Georgia Department of Transportation | P. I. No. XXXXXXX

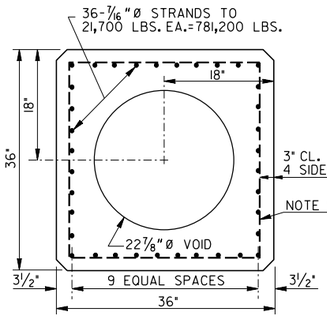

36" x 36"

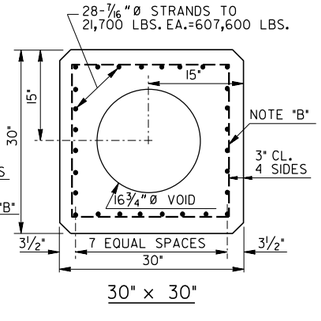

30" x 30"

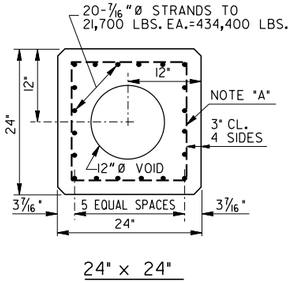

24" x 24"

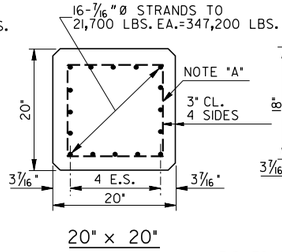

20" x 20"

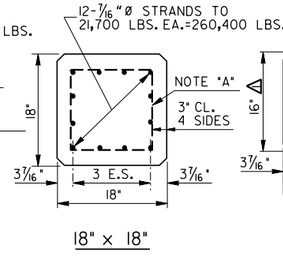

18" x 18"

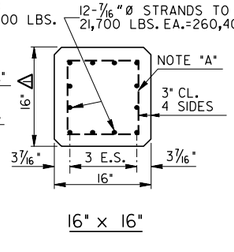

16" x 16"

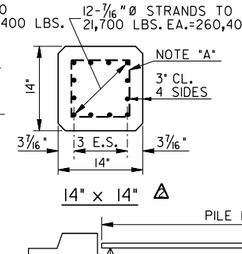

14" x 14" ⚠

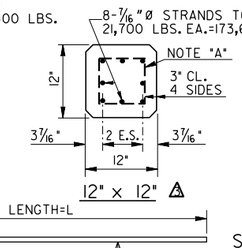

12" x 12" ⚠

E.S.=EQUAL SPACES
NOTE "A": NO. 5 BIRMINGHAM GAGE WIRE SPIRAL
NOTE "B": NO. 3 BIRMINGHAM GAGE WIRE SPIRAL

270K STRAND PILE CROSS SECTIONS

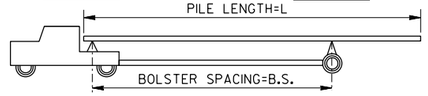

HAULING DIAGRAM

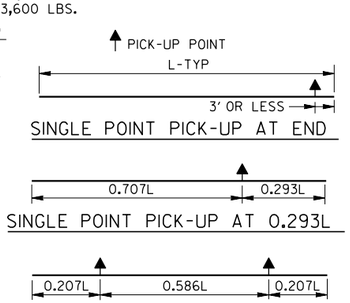

PICK-UP SKETCHES

⚠

PILE SIZE	AREA IN²	WEIGHT LBS/FT.	S IN³	N P.S.I.	PICK-UP POINTS MAX. L				PILE LENGTH(L)/BOLSTER SPACING (B.S.) IN FEET															
					END	0.293L	0.207L	0.153L	25	30	35	40	45	50	55	60	65	70	75	80	85	90 *	95	L
12 X 12	144.00	150	288.00	940	28′	49′	70′	95′	13-25	16-28	21-29	26-30	30-33	35										B.S. ⚠
14 X 14	196.00	204	457.33	1036	30′	52′	73′	100′	16-25	19-30	22-31	25-32	30-34	35-36	-	-	-	-	-	-	-	-	-	
16 X 16	256.00	267	682.67	793	34′	58′	83′	112′	16-25	19-30	22-34	25-35	29-36	33-38	38-40	-	-	-	-	-	-	-	-	
18 X 18	324.00	338	972.00	627	33′	57′	80′	109′	16-25	19-30	22-33	25-34	29-35	34-37	39	-	-	-	-	-	-	-	-	
20 X 20	400.00	417	1333.33	677	36′	61	87′	118′	16-25	19-30	22-35	25-36	29-37	32-39	37-41	42-43	-	-	-	-	-	-	-	
24 X 24	462.90	483	2219.17	731	44′	76′	107′	146′	16-25	19-30	22-35	25-40	29-44	32-45	35-46	38-47	43-49	48-51	53	-	-	-	-	
**	576.00	600	2304.00	588	37′	64′	91′	123′	16-25	19-30	22-35	25-37	29-38	32-40	37-42	42-44	-	-	-	-	-	-	-	
30 X 30	679.75	708	4242.40	697	50′	85′	121′	164′	16-25	19-30	22-35	25-40	29-45	32-50	35-50	38-51	41-53	45-54	50-56	55-58	60	-	-	
36 X 36	885.03	922	7029.31	689	56′	96′	136′	184′	16-25	19-30	22-35	25-40	29-45	32-50	35-55	38-56	41-57	44-58	47-60	52-61	57-63	62-65	67-68	

N=EFFECTIVE PRESTRESS. VALUES GIVEN IN THIS TABLE APPLY **ONLY** TO PILE SECTIONS USING 270K STRANDS.
** VALUES GIVEN ARE FOR 24"SQ. SOLID PILE WITH SAME NUMBER OF STRANDS, STRAND ARRANGEMENT AND INITIAL PRETENSION FORCE AS REQ'D. FOR 24"SQ. WITH 12"Ø VOID PILE.

FOR A GIVEN PILE LENGTH "L", THE MINIMUM AND MAXIMUM BOLSTER SPACINGS ARE TABULATED ASSUMING ONLY ONE OVERHANG. WHEN LONGER PILES ARE INVOLVED, HAULING WILL BE LIMITED AS FOLLOWS:

1. UNEQUAL OVERHANGS
THE MAXIMUM PERMITTED PILE LENGTH SHALL BE EQUAL TO TWICE THE [TABULATED PILE LENGTH MINUS BOLSTER SPACING] PLUS THE BOLSTER SPACING USED IN THIS EQUATION. THE MAXIMUM OVERHANG SHALL BE 0.293 TIMES THE LENGTH TABULATED IN THE COLUMN HEADED "0.293L".

*EXAMPLE: FOR 36" PILE [90-62][2] + 62=118', BOLSTER SPACING=62' MAXIMUM OVERHANG=0.293x96'=28.1'

2. EQUAL OVERHANGS
THE MAXIMUM PERMITTED PILE LENGTH SHALL BE BASED UPON THE DOUBLE POINT PICK-UP SYSTEM AND THE BOLSTER SPACING SHALL BE EQUAL TO 0.586L. THE MAXIMUM PILE LENGTH HAULED SHALL BE THAT TABULATED IN THE COLUMN HEADED "0.207 L".

EXAMPLE: FOR 36" PILE 135' LONG EACH OVERHANG 0.207x135'=27.945'
B.S. 0.586x135'=79.11' MAXIMUM LENGTH=136'>135'

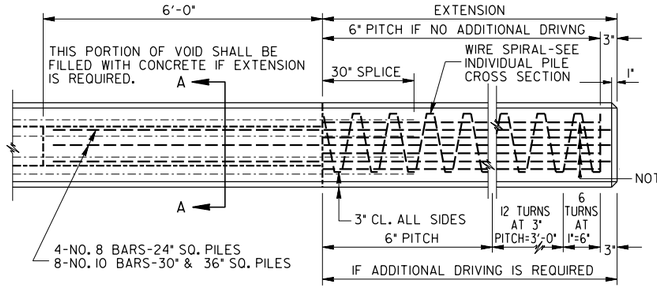

24" SQ. THRU 36" SQ. PILE EXTENSION

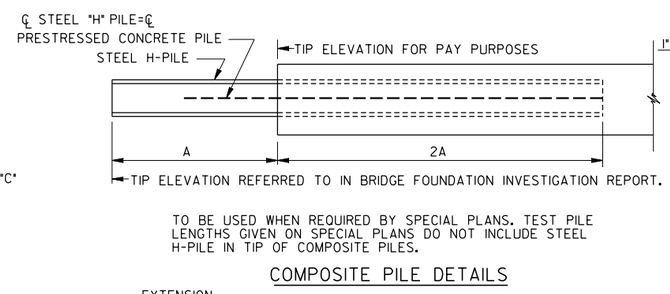

TO BE USED WHEN REQUIRED BY SPECIAL PLANS. TEST PILE LENGTHS GIVEN ON SPECIAL PLANS DO NOT INCLUDE STEEL H-PILE IN TIP OF COMPOSITE PILES.

COMPOSITE PILE DETAILS

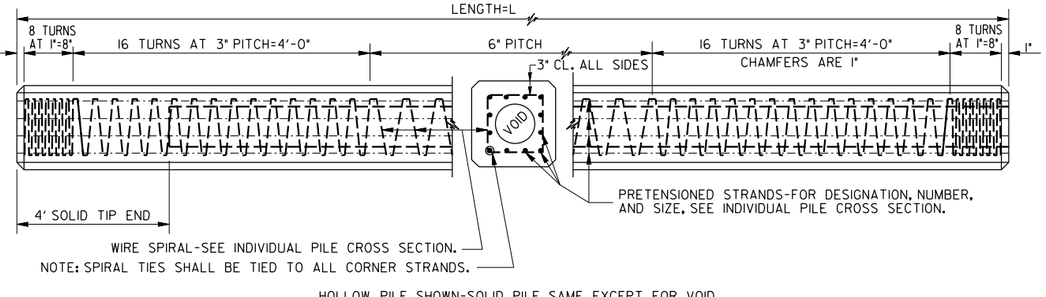

HOLLOW PILE SHOWN-SOLID PILE SAME, EXCEPT FOR VOID

TYPICAL PILE DETAILS

FOR 24" SQ. SOLID PILE, HOLES FOR NO. 8 BARS SHALL BE DRILLED 24" INTO PRESTRESSED CONCRETE AND BARS DEVELOPED WITH AN APPROVED EPOXY BONDING COMPOUND.

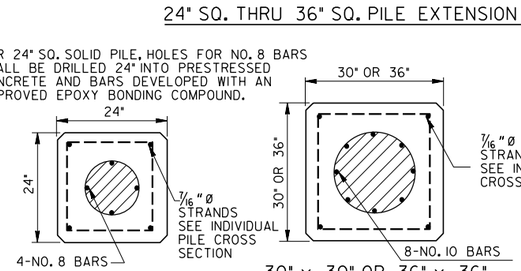

24" x 24" 30" x 30" OR 36" x 36"

SECTION A-A

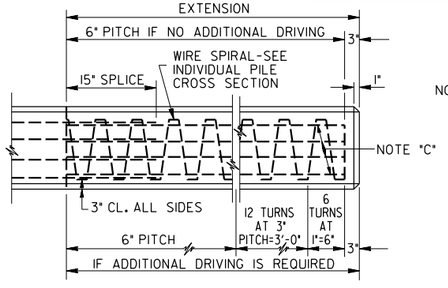

14" SQ. THRU 20" SQ. PILE EXTENSION

VOIDS SHALL BE LOCATED WITHIN ½" OF POSITION SHOWN.

NOTE C: NO. 5 BARS FOR PILES 12" THRU 24" NO. 6 BARS FOR 30" & 36" PILES. PLACE ONE BAR AT EACH PRETENSIONED STRAND. SEE INDIVIDUAL PILE CROSS SECTION FOR NUMBER OF STRANDS.

NOTE: 1"Ø HOLES SHALL BE FORMED IN ONE FACE (AT 5 FT. ON CENTER) IN VOID-TYPE PILE IN PILING CAST FOR A SPECIFIC PROJECT. THESE HOLES WILL BE REQUIRED ONLY FOR THAT PORTION EXPECTED TO REMAIN ABOVE GROUND.

GENERAL DETAILS
250K OR 270K PILING

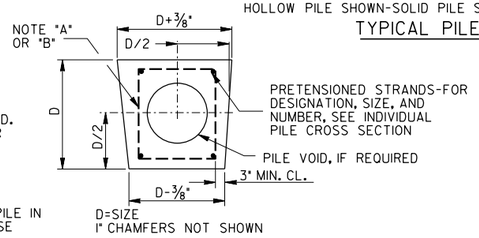

ALTERNATE PILE CROSS SECTION

DESIGN DATA

CONCRETE___5,000 P.S.I.-CLASS AAA
PRETENSIONED STRANDS___250K OR 270K
TOTAL LOSSES___22% OF INITIAL PRETENSION FORCE
WIRE SPIRALS___A.S.T.M. A82 OR A.A.S.H.O. M32

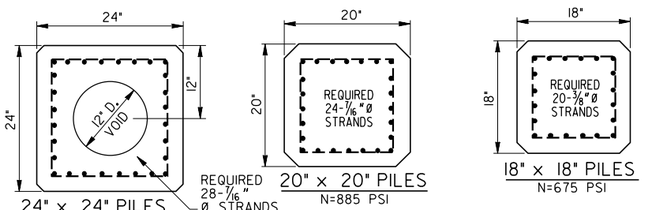

24" x 24" PILES N=892 PSI
20" x 20" PILES N=885 PSI
18" x 18" PILES N=675 PSI
16" x 16" PILES
14" x 14" PILES N=669 PSI
12" x 12" PILES ⚠

WIRE SPIRALS SHALL BE NO. 5 BIRMINGHAM GAGE.

⅜"Ø 250K STRANDS SHALL BE PRETENSIONED TO 14,000 LBS. EACH, AND 7/16"Ø 250K STRANDS TO 18,900 LBS. EACH

250K STRAND PILE CROSS SECTIONS

MAX. PILE LENGTH	PILE SIZE
30 FT.	14" x 14"
38 FT.	16" x 16"
34 FT.	18" x 18"
39 FT.	20" x 20"
46 FT.	24" x 24"
27 FT.	12" x 12" ⚠

SINGLE POINT PICKUP

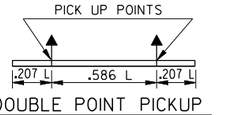

DOUBLE POINT PICKUP

NOTES

1. PILES SHALL BE PLAINLY MARKED TO INDICATE PROPER PICK-UP POINTS FOR ATTACHING HANDLING LINES.
2. THE TWO POINT PICK-UP SHALL BE USED FOR HANDLING AND TRANSPORTING PILES FROM CASTING YARD TO JOB SITE IN ALL CASES, AND FOR UNLOADING AND STORING AT JOB SITE.

	DATE	REVISION	BY
⚠	2-22-84	ADDED 12" SQ. PILES	J.E.T.
⚠	2-4-81	14" SQ. PILES	J.E.T.
⚠	12-18-74	CORRECTED 16"X16" PILES	J.E.T.

DEPARTMENT OF TRANSPORTATION
STATE OF GEORGIA

STANDARD

SQUARE PRESTRESSED CONCRETE PILES

NOT TO SCALE | REDRAWN JULY 2024 | OCTOBER 1974

DESIGNED W.B.L.-J.E.T.
DRAWN J.E.T.
TRACED M.V.W.
CHECKED J.W.P.

(SUBMITTED) C. L. Chapman Jr. BRIDGE ENGINEER
(APPROVED) Thos. D. Moreland STATE HIGHWAY ENGINEER

NUMBER 3215

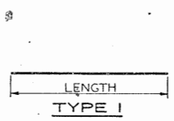

TYPE 1

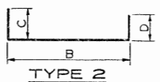

TYPE 2

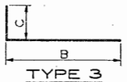

TYPE 3

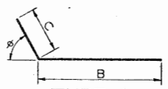

TYPE 4

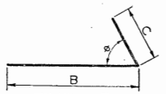

TYPE 5

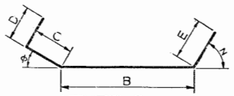

TYPE 6

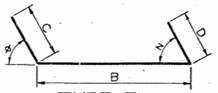

TYPE 7

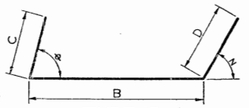

TYPE 8

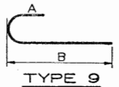

TYPE 9

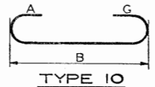

TYPE 10

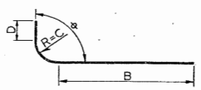

TYPE 11

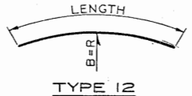

TYPE 12

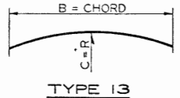

TYPE 13

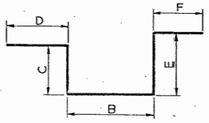

TYPE 14

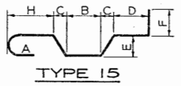

TYPE 15

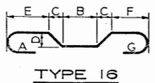

TYPE 16

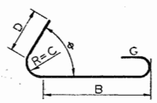

TYPE 17

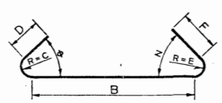

TYPE 18

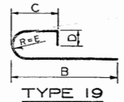

TYPE 19

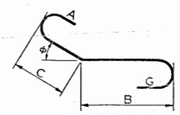

TYPE 20

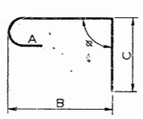

TYPE 21

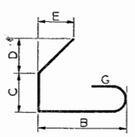

TYPE 22

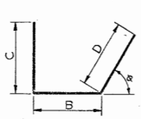

TYPE 23

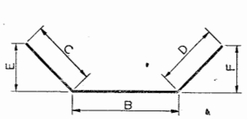

TYPE 24

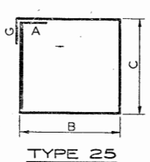

TYPE 25

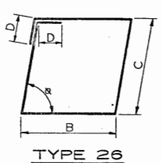

TYPE 26

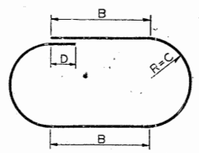

TYPE 27

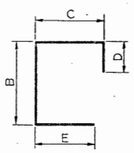

TYPE 28

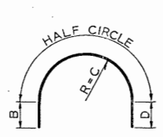

TYPE 29

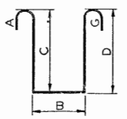

TYPE 30

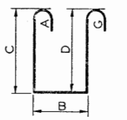

TYPE 31

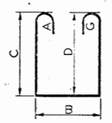

TYPE 32

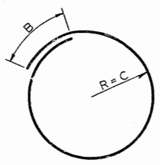

TYPE 33

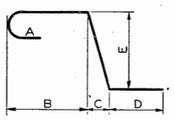

TYPE 34

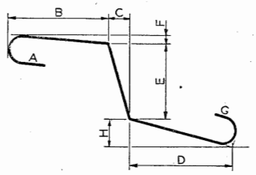

TYPE 35

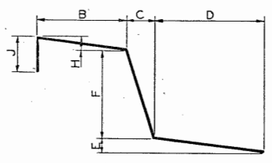

TYPE 36

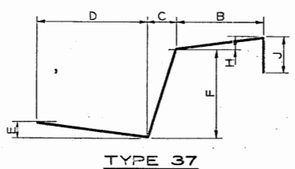

TYPE 37

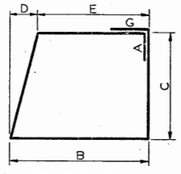

TYPE 38

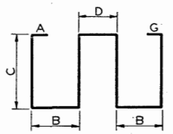

TYPE 39

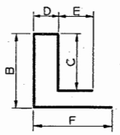

TYPE 40

TYPE 41

TYPE 42

N = NUMBER OF BEAMS OR WALLS
NUMBER OF D's = N-1
NUMBER OF B's = 2(N-1)
NUMBER OF C's = N-2

TYPE 43

N = NUMBER OF BEAMS OR WALLS
NUMBER OF D's = N-1
NUMBER OF B's = 2N-1
NUMBER OF C's = N-1

TYPE 44

C = PITCH
B = OVERALL HEIGHT
Φ = 40 - SPIRAL IS MADE OF GRADE 40 BILLET STEEL DEFORMED BARS - A.S.T.M. DESIGNATION A-615.

Φ = 60 - SPIRAL IS MADE OF COLD DRAWN STEEL WIRE - A.S.T.M. DESIGNATION A-82.

SPLICES MAY BE ACCOMPLISHED BY LAPPING AND WELDING 1½ TURNS. PROVIDE "N" = TOTAL NUMBER OF CLOSED TURNS AT TOP AND BOTTOM OF COLUMNS. COST OF CHANNEL SPACERS AND SPLICES SHALL BE INCLUDED IN PRICE BID FOR REINFORCEMENT STEEL.

TYPE 45

TYPE 46

TYPE 47

TYPE 48

TYPE 49

TYPE 50

TYPE 51

TYPE 52

TYPE 53

TYPE 54

TYPE 55

TYPE 56

TYPE 57

TYPE 58

TYPE 59

NOTES

ALL DIMENSIONS ARE OUT TO OUT UNLESS NOTED.

ALL RADII ARE OUTSIDE.

SEE HOOK DETAILS FOR HOOK DESCRIPTIONS AND NOTES.

A DIMENSION SHOWN AS ZERO ON BAR SCHEDULE DELETES THAT PART OF BAR TYPE.

FED ROAD DIV. NO.	STATE	FED AID PROJ. NO.	STATE AID PROJ. NO.	FISCAL YEAR	SHEET NO.	TOTAL SHEETS
3	GA.					

HOOK DETAILS

RECOMMENDED 180° HOOKS

GRADE 40 ksi
D = 5d for #3 through #11
D = 10d for #14 and #18

GRADES 50-60-75 ksi
D = 6d for #3 through #8
D = 8d for #9, #10, and #11
D = 10d for #14 and #18

RECOMMENDED 180° END HOOK DIMENSIONS

BAR SIZE	GRADES 50-60-75 ksi		GRADE 40 ksi	
	A or G	J	A or G	J
#3	5	3	5	2¾
#4	6	4	6	3½
#5	7	5	7	4½
#6	8	6	8	5¼
#7	10	7	9	6¼
#8	11	8	10	7
#9	1-3	1-1¾	1-0	8
#10	1-5	1-0¾	1-1	9
#11	1-7	1-2¾	1-2	10
#14	2-2	1-8½	2-2	1-8½
#18	2-11	2-3	2-11	2-3
STYLE	1		2	

RECOMMENDED 90° END HOOK DIMENSIONS

ALL GRADES
D = 6d for #3 through #8
D = 8d for #9, #10, and #11
D = 10d for #14 and #18

BAR SIZE	HOOK A or G
#3	6
#4	8
#5	10
#6	1-0
#7	1-2
#8	1-4
#9	1-7
#10	1-10
#11	2-0
#14	2-7
#18	3-5
HOOK STYLE 3	

STIRRUP AND TIE HOOK

STIRRUPS
(TIES SIMILAR)

STIRRUP AND TIE HOOK DIMENSIONS
GRADES 40-50-60 ksi

BAR SIZE	D (in.)	90° HOOK	135° HOOK	
		HOOK A or G	HOOK A or G	H Approx.
#3	1½	4	4	2½
#4	2	4½	4½	3
#5	2½	6	5½	3¾
#6	3	6½	6½	4½
STYLE		4	5	

STYLE 6 = NO HOOK

HOOK STYLES DETAILED ON THIS SHEET ARE FOR ILLUSTRATION ONLY. ACTUAL HOOK STYLE FOR ANY PARTICULAR BAR WILL BE SHOWN UNDER A or G HEADING ON BAR SCHEDULE.

DATE | REVISIONS | BY

STATE HIGHWAY DEPARTMENT OF GEORGIA
BRIDGE DIVISION

STANDARD

BAR BENDING DETAILS

NO SCALE

AUGUST 1969

DESIGNED
DRAWN E.S.L.
TRACED B.J.W.
CHECKED G.T.S.

SUBMITTED R. L. Glassman Jr. BRIDGE ENGINEER
APPROVED STATE HIGHWAY ENGINEER

NUMBER 3901

LENGTH OF GUARDRAIL ADVANCEMENT AT FIXED OBJECTS OR AT WARRANTING FILL SLOPES (TYPICAL)

GDOT Georgia Department of Transportation — P. I. No.

FLARED

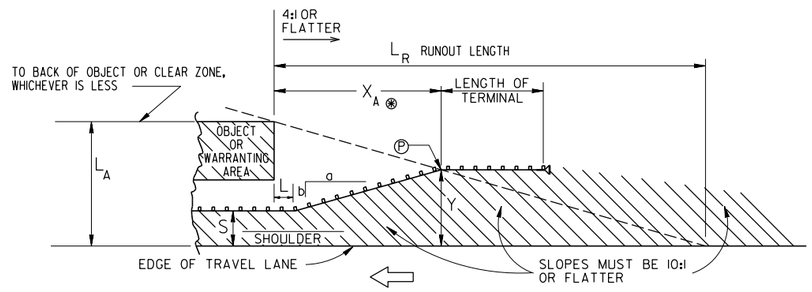

$$Y = L_A - \frac{L_A}{L_R}(X_A) \qquad X_A = \frac{L_A + (b/a)L - S}{b/a + (L_A/L_R)}$$

STANDARD

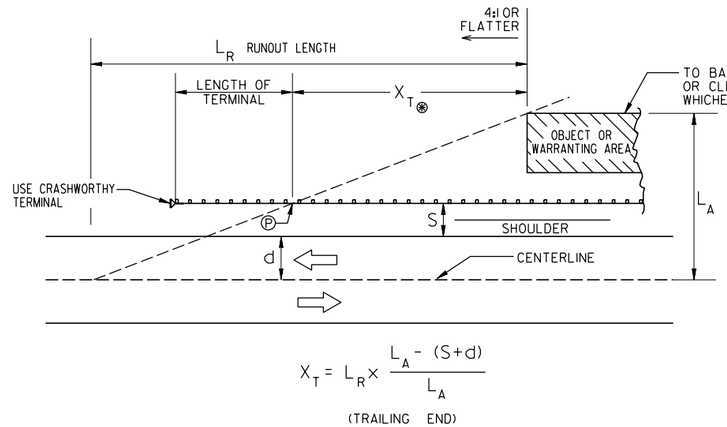

$$X_T = L_R \times \frac{L_A - (S+d)}{L_A}$$

(TRAILING END)

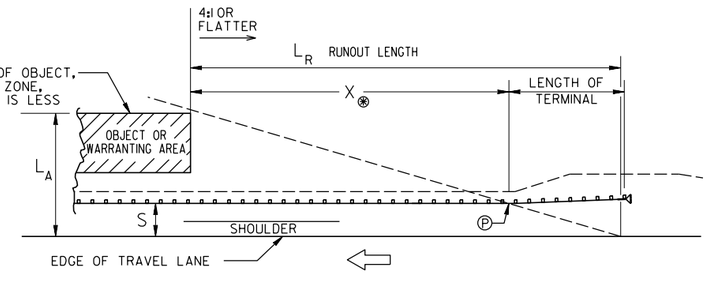

$$X = L_R \times \frac{L_A - S}{L_A}$$

(APPROACH END)

S = NORMAL WIDTH OF USUABLE SHOULDER PLUS 2 FT (TYP.)

Ⓟ = BEGINNING OF TERMINAL (TYP.)

⊛ X_A, X_T, AND X = LENGTH OF ADVANCEMENT, MEASURED TO THE END OF W-BEAM, WHERE TERMINAL BEGINS

FLARE RATE			
DESIGN SPEED (mph)	SHY-LINE OFFSET (ft)	(a/b)	
		BARRIER INSIDE SHY-LINE	BARRIER AT OR BEYOND SHY-LINE
70	9	30	15
60	8	26	14
55	7	24	12
50	6.5	21	11
45	6	18	10
40	5	16	8
30	4	13	7

WHERE 'S' IS LESS THAN THE SHY-LINE OFFSET, USE FLATTER RATES GIVEN IN TABLE.

DESIGN SPEED (MPH)	L_R Runout Length in feet			
	OVER 10000 (A,D,T$_s$)	5000-10000 (A,D,T$_s$)	1000-5000 (A,D,T$_s$)	UNDER 1000 (A,D,T$_s$)
75 & 80	470	430	380	330
65 & 70	360	330	290	250
55 & 60	300	250	210	200
45 & 50	230	190	160	150
35 & 40	160	130	110	100
≤ 30	110	90	80	70

COMPARATIVE BARRIER CONSIDERATION FOR EMBANKMENTS

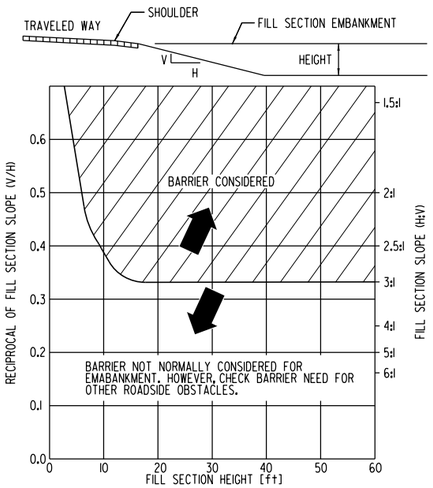

PREFERRED CROSS SECTIONS FOR CHANNELS WITH ABRUPT SLOPE CHANGES AND BACKSLOPE WITHIN CLEAR ZONE

THIS CHART IS APPLICABLE TO ALL VEE DITCHES, ROUNDED CHANNELS WITH A BOTTOM WIDTH LESS THAN 8 FT AND TRAPEZOIDAL CHANNELS WITH BOTTOM WIDTHS LESS THAN 4 FT

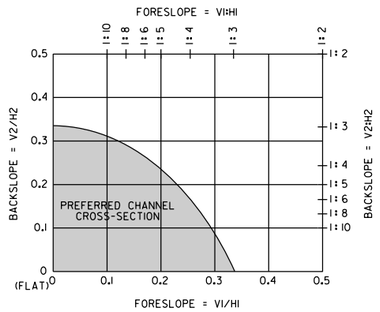

PREFERRED CROSS SECTIONS FOR CHANNELS WITH GRADUAL SLOPE CHANGES AND BACKSLOPE WITHIN CLEAR ZONE

THIS CHART IS APPLICABLE TO ROUNDED CHANNELS WITH BOTTOM WIDTHS OF 8 FT OR MORE AND TO TRAPEZOIDAL CHANNELS WITH BOTTOM WIDTHS EQUAL TO OR GREATER THAN 4 FT

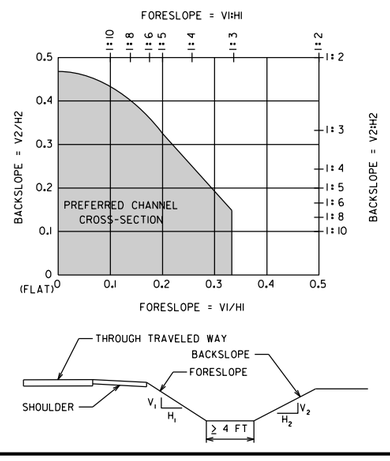

CLEAR ZONE DISTANCES

HORIZONTAL CURVE ADJUSTMENTS

RADIUS (FEET)	K_{CZ} (CURVE CORRECTION FACTOR) DESIGN SPEED (MPH)					
	≤ 40	45	50	55	65	70
2950	1.1	1.1	1.1	1.2	1.2	1.2
2300	1.1	1.1	1.2	1.2	1.2	1.3
1970	1.1	1.2	1.2	1.2	1.3	1.4
1640	1.1	1.2	1.2	1.3	1.3	1.4
1475	1.2	1.2	1.3	1.3	1.4	1.5
1315	1.2	1.2	1.3	1.3	1.4	
1150	1.2	1.2	1.3	1.4	1.5	
985	1.2	1.3	1.4	1.5	1.5	
820	1.3	1.3	1.4	1.5		
660	1.3	1.4	1.5			
495	1.4	1.5				
330	1.5					

$CZ_C = (L_C)(K_{CZ})$

Where:

CZ_C = CLEAR ZONE ON OUTSIDE OF CURVATURE, FEET

L_C = CLEAR ZONES DISTANCE, FEET (SEE CHART AT LEFT)

K_{CZ} = CURVE CORRECTION FACTOR

NOTE:
THE CURVE CORRECTION FACTOR IS APPLIED TO THE OUTSIDE OF CURVES ONLY. CORRECTIONS ARE TYPICALLY MADE ONLY TO CURVES LESS THAN 2,950-FT RADIUS.

CLEAR ZONE DISTANCES (FT) CHART

DESIGN SPEED	DESIGN ADT	FORESLOPES			BACKSLOPES		
		IV:6H OR FLATTER	IV:5H TO IV:4H	IV:3H	IV:3H	IV:5H TO IV:4H	IV:6H OR FLATTER
40 M.P.H. OR LESS	UNDER 750	7-10	7-10	**	7-10	7-10	7-10
	750-1500	10-12	12-14	**	10-12	10-12	10-12
	1500-6000	12-14	14-16	**	12-14	12-14	12-14
	OVER 6000	14-16	16-18	**	14-16	14-16	14-16
45-50 M.P.H.	UNDER 750	10-12	12-14	**	8-10	8-10	10-12
	750-1500	14-16	16-20	**	10-12	12-14	14-16
	1500-6000	16-18	20-26	**	12-14	14-16	16-18
	OVER 6000	20-22	24-28	**	14-16	18-20	20-22
55 M.P.H.	UNDER 750	12-14	14-18	**	8-10	10-12	10-12
	750-1500	16-18	20-24	**	10-12	14-16	16-18
	1500-6000	20-22	24-30	**	14-16	16-18	20-22
	OVER 6000	22-24	26-32*	**	16-18	20-22	22-24
60 M.P.H.	UNDER 750	16-18	20-24	**	10-12	12-14	14-16
	750-1500	20-24	26-32*	**	12-14	16-18	20-22
	1500-6000	26-30	32-40*	**	14-18	18-22	24-26
	OVER 6000	30-32*	36-44*	**	20-22	24-26	26-28
65-70 M.P.H.	UNDER 750	18-20	20-26	**	10-12	14-16	14-16
	750-1500	24-26	28-36*	**	12-16	18-20	20-22
	1500-6000	28-32*	34-42*	**	16-20	22-24	26-28
	OVER 6000	30-34*	38-46*	**	22-24	26-30	28-30

* WHEN A SITE-SPECIFIC INVESTIGATION INDICATES A HIGH PROBABILITY OF CONTINUING CRASHES OR WHEN SUCH OCCURRENCES ARE INDICATED BY CRASH HISTORY, THE DESIGNER MAY PROVIDE CLEAR-ZONE DISTANCES GREATER THAN THE CLEAR ZONE SHOWN ABOVE. CLEAR ZONES MAY BE LIMITED TO 30 FT. FOR PRACTICALITY AND TO PROVIDE A CONSISTENT ROADWAY TEMPLATE IF PREVIOUS EXPERIENCE WITH SIMILAR PROJECTS OR DESIGNS INDICATES SATISFACTORY PERFORMANCE.

** BECAUSE RECOVERY IS LESS LIKELY ON THE UNSHIELDED, TRAVERSABLE IV:3H FILL SLOPES, FIXED OBJECTS SHOULD NOT BE PRESENT IN THE VICINITY OF THE TOE OF THESE SLOPES. RECOVERY OF HIGH-SPEED VEHICLES THAT ENCROACH BEYOND THE EDGE OF THE SHOULDER MAY BE EXPECTED TO OCCUR BEYOND THE TOE OF SLOPE. DETERMINATION OF THE WIDTH OF THE RECOVERY AREA AT THE TOE OF SLOPE SHOULD CONSIDER RIGHT-OF-WAY AVAILABILITY, ENVIRONMENTAL CONCERNS, ECONOMIC FACTORS, SAFETY NEEDS, AND CRASH HISTORIES. ALSO, THE DISTANCE BETWEEN THE EDGE OF THE THROUGH TRAVELED LAND AND THE BEGINNING OF THE IV:3H SLOPE SHOULD INFLUENCE THE RECOVERY AREA PROVIDED AT THE TOE OF SLOPE. A 10-FT RECOVERY AREA AT THE TOE OF SLOPE SHOULD BE PROVIDED FOR ALL TRAVERSABLE, NON RECOVERABLE FILL SLOPES.

BY	REVISION	DATE
PJN	ADDED PREF. CHNL X-SECS.	07-01-26
	REV. ANCH. TO TERMINAL.	
	REV. LR AND CZ TABLES	01-29-16
FBF	REV. ANC. LOC.; UPDATED FLARE TABLE; ADDED CHART	
- - -	PREV. REV. NOT LISTED	--/--/--

DEPARTMENT OF TRANSPORTATION
STATE OF GEORGIA

STANDARD

GUARDRAIL WARRANT GUIDES
LENGTHS OF ADVANCEMENT
CLEAR ZONE DISTANCES
FILL HEIGHT EMBANKMENTS

NOT TO SCALE — DEC. 1999

DES. ____ DRW. ____ TRA. ____ CHK. ____

(SUBMITTED) Daniel G. Pass — STATE DESIGN POLICY ENGR.

(APPROVED) Margaret B Pinelo — CHIEF ENGINEER

NUMBER 4000W

STATE	PROJECT NUMBER	SHEET NO.	TOTAL SHEETS
GA.			

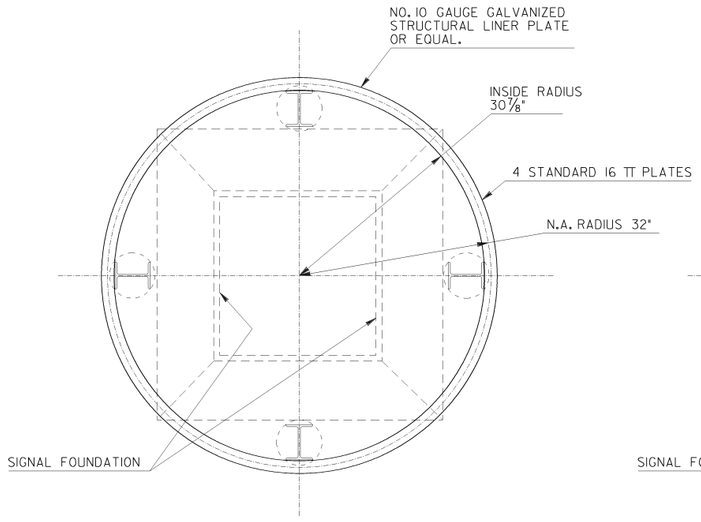

PLAN

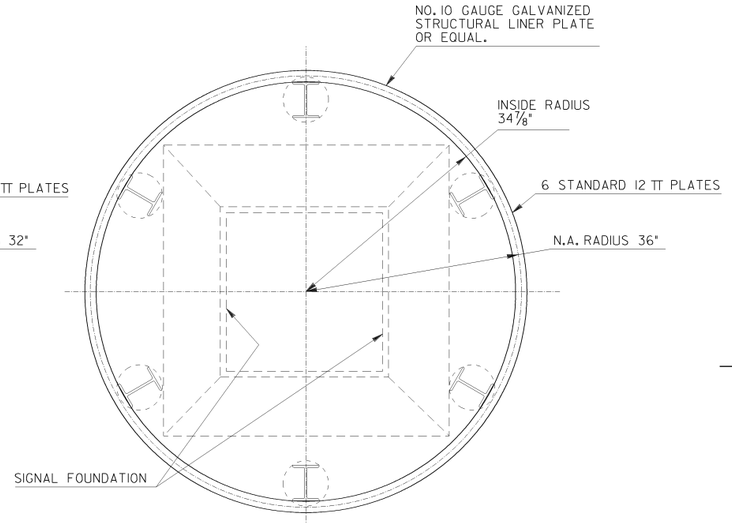

PLAN

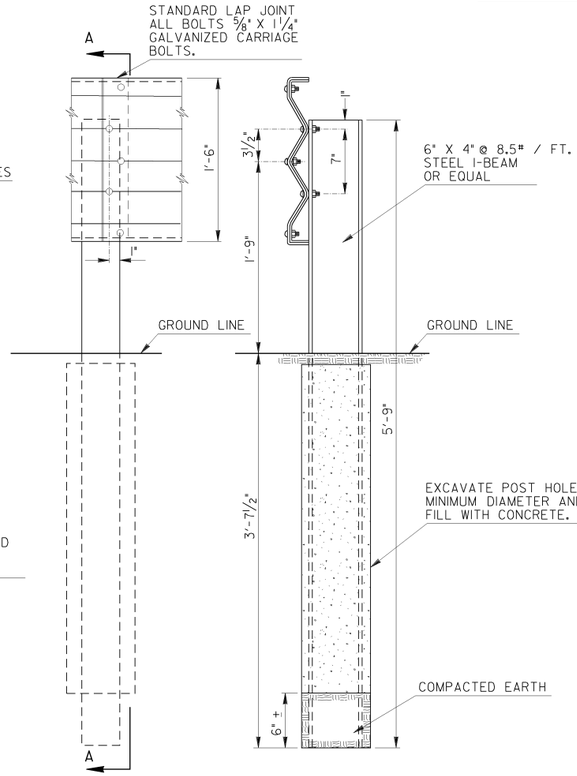

DETAIL AT LAP & POST

SECTION A-A

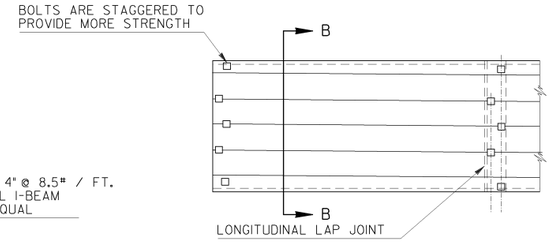

PLAN

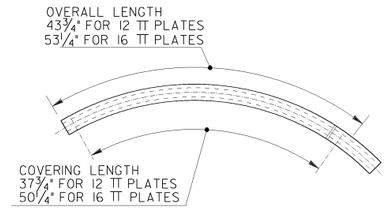

ELEVATION

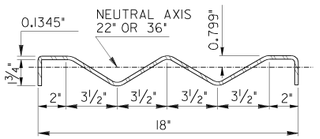

SECTION B-B

DETAILS OF PLATES

NOTE: PLATES OF EQUAL DESIGN MAY BE SUBSTITUTED FOR PLATES SHOWN.

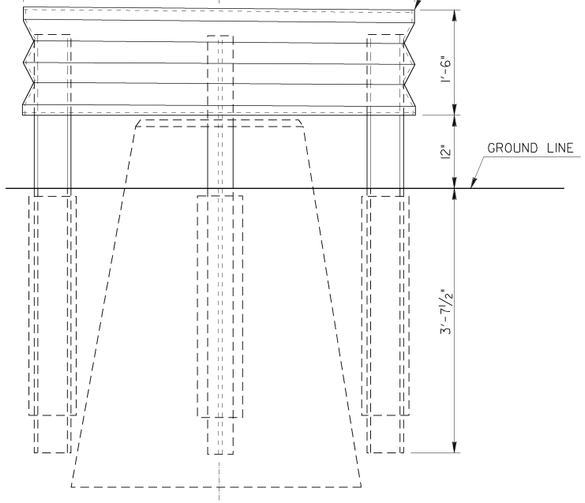

ELEVATION
64" DIAMETER

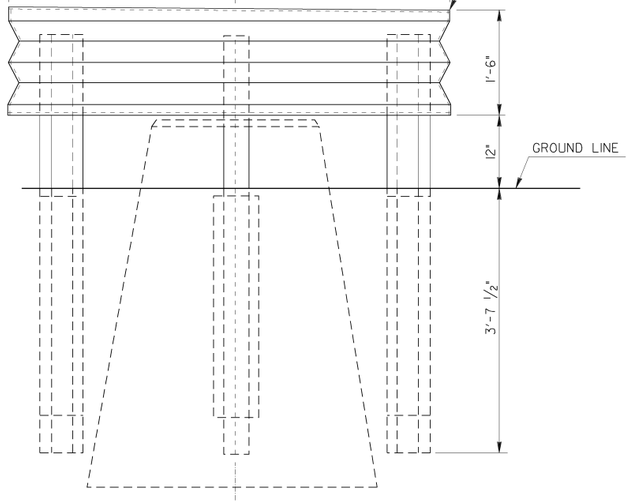

ELEVATION
72" DIAMETER

G.J.P.	6-30-98	REDRAWN	DATE
G.C.R.	3 MAY 51	ADDED DETAIL OF PLATES, ETC.	REVISION
BY			

DEPARTMENT OF TRANSPORTATION
STATE OF GEORGIA

STANDARD
DETAILS OF GALVANIZED METAL CIRCULAR GUARD RAIL FOR PROTECTION OF R.R. SIGNALS

SCALE AS SHOWN — APRIL 18, 1951

DESIGNED ____
DRAWN ____
TRACED G.C.R.
CHECKED ____

(SUBMITTED) _____ ROAD DESIGN ENGR.
(APPROVED) _____ STATE HIGHWAY ENGINEER

NUMBER 4030

GDOT Georgia Department of Transportation | P. I. No.

REFLECTORIZED DELINEATOR

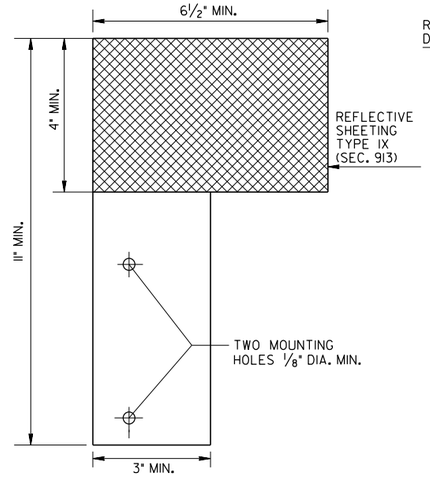

REFLECTORIZED DELINEATOR LOCATION DETAIL

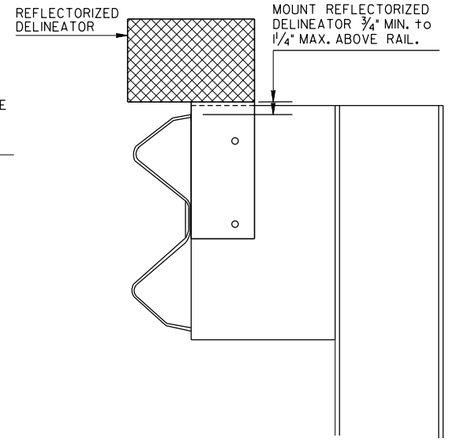

ALTERNATE DELINEATOR DETAIL

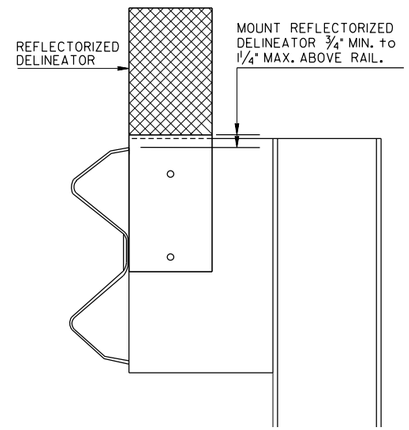

NOSE STRIPING DETAILS

(REQUIRED FOR ANCHORAGE WITH ROUNDED NOSE)

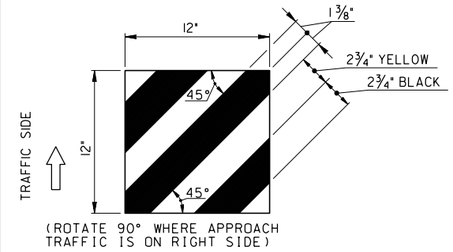

(ROTATE 90° WHERE APPROACH TRAFFIC IS ON RIGHT SIDE)

(REQUIRED WITH ANCHORAGE WITH EXTRUDER OR IMPACT HEADS)

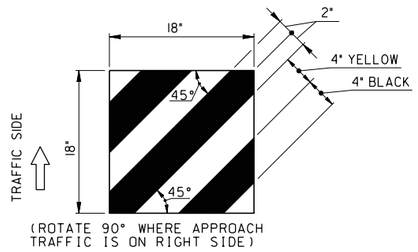

(ROTATE 90° WHERE APPROACH TRAFFIC IS ON RIGHT SIDE)

BLACK GLOSS DURABLE INK PRINTED ON TYPE IX REFLECTIVE SHEETING (SEE CURRENT SEC. 913 AND 917)

REFLECTIVE GUARDRAIL DELINEATORS:
1. DELINEATOR SHALL HAVE A MINIMUM THICKNESS OF 0.125 INCHES.
2. THE DELINEATOR SHALL BE BLACK, HIGH-DENSITY POLYETHYLENE PANEL THAT IS STABILIZED AGAINST ULTRAVIOLET DEGRADATION.
3. DELINEATOR SHALL HAVE A MINIMUM REFLECTIVE AREA OF 26 SQUARE INCHES FOR RIGHT AND LEFT DELINEATOR AND WILL USE TYPE IX REFLECTIVE SHEETING.
4. DELINEATOR SHALL MEET THE FOLLOWING COLOR REQUIREMENTS: YELLOW IN THE MEDAIN, WHITE OF THE OUTSIDE SHOULDER AND RED ON THE REVERSE SIDE OF THE DELINEATOR AT RAMP LOCATIONS.
5. DELINEATOR SHALL HAVE PREDRILLED HOLES IN THE PANEL TO ALLOW THE DELINEATOR TO BE ATTACHED TO WOOD, PLASTIC OR STEEL GUARDRAIL OFFSET BLOCKS WITH SCREWS, NAILS, EPOXY ADHESIVE OR AS PER MANUFACTURER'S RECOMMENDATIONS.

ALONG ROADSIDE

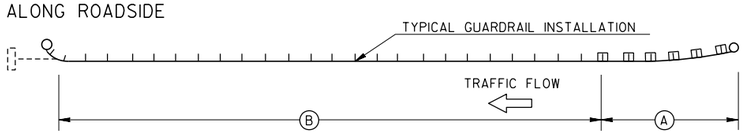

APPROACH END-BRIDGE OR CONCRETE BARRIER

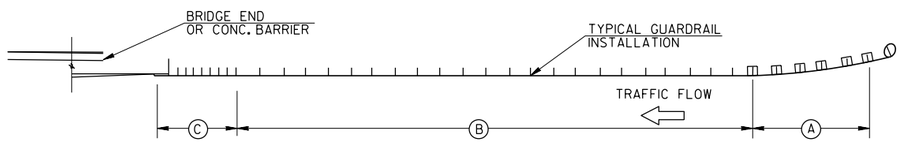

TRAILING END-BRIDGE OR CONCRETE BARRIER

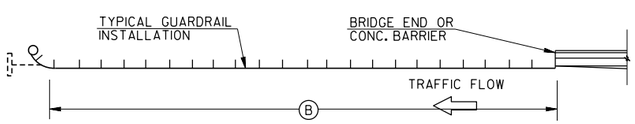

AT TURNOUTS

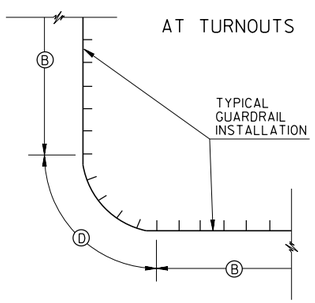

SPACING OF REFLECTORIZED WASHERS AND DELINEATORS

(A) AT ANCHORAGES:
- -TWO (2) REFLECTORIZES WASHERS ARE REQUIRED ON THE RAIL UNDER SPLICE BOLTS AS DIRECT BY THE ENGINEER FOR ELLIPTICALLY FLARED ANCHORAGES WITH ROUNDED END PIECES.
- -NO REFLECTORIZED WASHERS OR DELINEATOR WILL BE USED FOR TANGENTIALLY ALIGNED OR STRAIGHT TAPERED ANCHORAGE WITH EXTRUDER OR IMPACT HEADS;

(B) AT 75 FT. SPACINGS FOR INTERMEDIATE SECTIONS;

(C) THREE WASHERS AT 6'-3" SPACING AT CONNECTIONS TO CONCRETE FACE ON THE APPROACH END;

(D) AT 12'-6" SPACINGS AROUND RADII TURNS.

NOTE: THE SPACING WILL BE USED TO INSTALL THE DELINEATOR ON NEW GUARDRAIL, EXISTING GUARDRAIL WITH EXISTING GUARDRAIL WASHERS AND EXISTING GUARDRAIL WITHOUT EXISTING GUARDRAIL WASHERS.

REFLECTORIZED WASHER LOCATION DETAILS (AT SPLICE LOCATIONS - NOT ON POST/OFFSET BLOCK LOCATION)

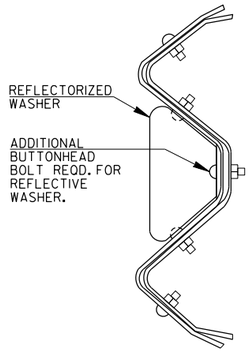

NOTES:
REFLECTORIZED WASHERS SHALL BE INSTALLED AT MID-SPAN SPLICE LOCATIONS ONLY.
REFLECTIVE WASHERS SHALL NOT BE INSTALLED AT POST LOCATIONS.
FOR 'T'-BEAM GUARDRAIL, REFLECTORIZED WASHER IS PLACED IN THE TOP INDENTION.

REFLECTORIZED WASHER DETAILS

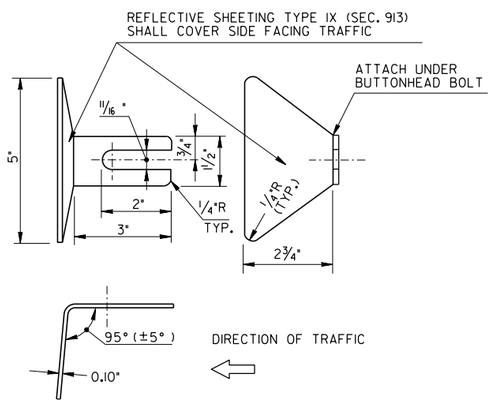

MATERIALS: ALUMINUM (ASTM B209 ALLOY 5052-H32), 12 GUAGE GALVANIZED STEEL (ASTM A653/A653M), OR ACRYLONITRILE-BUTADIENE-STYRENE (ABS) (ASTM D4673-16) WITH REFLECTIVE SHEETING, AS APPROVED BY THE OFFICE OF MATERIALS AND TESTING.

COLORS: YELLOW IN MEDIANS AND WHITE ON OUTSIDE SHOULDERS

GENERAL NOTES:

1. SPECIFICATIONS: GEORGIA STANDARD, CURRENT EDITION, & SUPPLEMENTS THERETO.
2. SEE SEPARATE STANDARDS FOR DETAILS OF GUARDRAIL INSTALLATIONS, CONNECTING HARDWARE, AND ANCHORAGES.
3. PAYMENT FOR REFLECTORIZED WASHERS, DELINEATORS AND NOSE STRIPING WILL BE INCLUDED IN THE PAVEMENT FOR GUARDRAIL AND ANCHORS IF INDIVIDUALS PAY ITEMS ARE NOT SHOWN IN THE CONTRACT.
4. ADJUSTMENTS OF SPACINGS AND/OR REQUIREMENTS FOR REFLECTIVE WASHERS AND DELINEATORS MAY BE DIRECTED BY THE ENGINEER TO SUIT INDIVIDUAL LOCATIONS.
5. WHERE DOUBLE FACED GUARDRAIL IS LOCATED ON THE INSIDE SHOULDER OF MEDIANS, REFLECTORIZED WASHERS AND DELINEATORS SHALL BE REQUIRED ONLY ON THE SIDE WHICH IS NEAREST TO TRAFFIC, UNLESS SPECIFIED OTHERWISE.
6. WHEN DOUBLE FACED GUARDRAIL IS LOCATED IN THE CENTER OF THE MEDIAN, REFLECTORIZED WASHER AND DELINEATORS SHALL BE REQUIRED ON BOTH SIDES.

BY	REVISION	DATE
JAHR	REV. REFL. WASHER MATLS.	07-01-23
	REV. REFL. WASHER LOCAT.	
	REV. REFL. WASHER ANGLE	10-22-14
BJO	ADDED G'RAIL DELINEATOR AND REVISED GEN. NOTE.	
GLO	REV. REFLECTIVE. SH. TYPE.	4-10-06
RMU	REFLEC. SH. SPEC.	2-1-01
RMU	ADD NOSE STRIPING	6-1-99

DEPARTMENT OF TRANSPORTATION
STATE OF GEORGIA

STANDARD

REFLECTORIZED GUARDRAIL WASHERS, DELINEATOR AND ANCHORAGE NOSE STRIPING

NO SCALE — REV. & REDR. APRIL, 1999

DES. ____ DRWN. ____ CHK. ____

(SUBMITTED) STATE DESIGN POLICY ENGINEER

(APPROVED) CHIEF ENGINEER

NUMBER 4360

GDOT Georgia Department of Transportation | P. I. No.

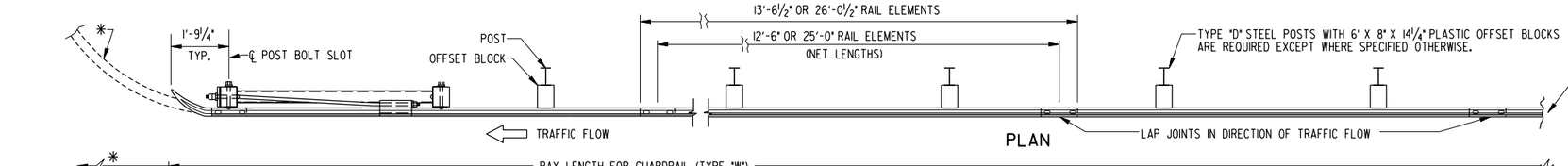

PLAN

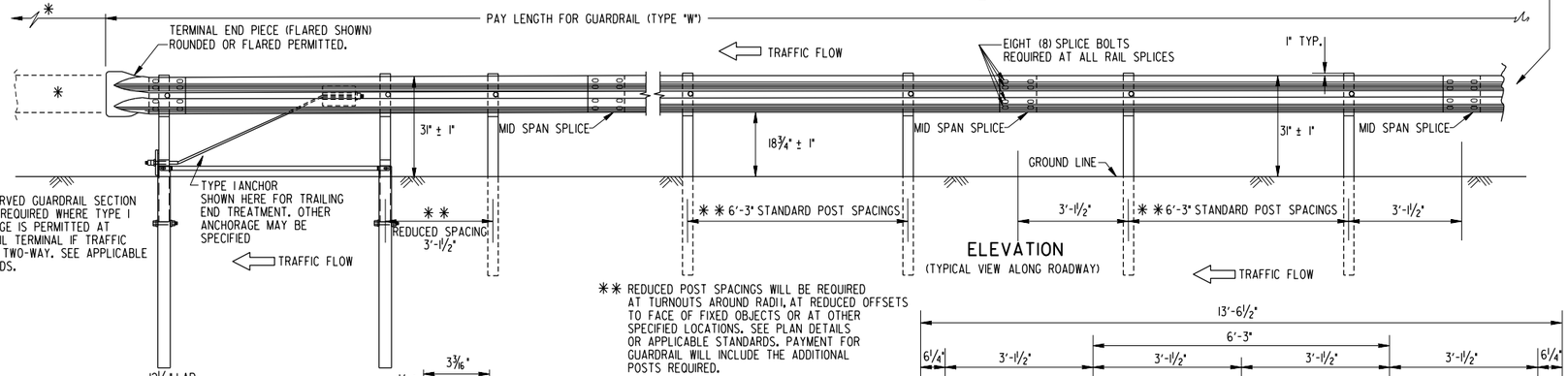

ELEVATION
(TYPICAL VIEW ALONG ROADWAY)

✱ NOTE:
A PRECURVED GUARDRAIL SECTION WILL BE REQUIRED WHERE TYPE I ANCHORAGE IS PERMITTED AT GUARDRAIL TERMINAL IF TRAFFIC FLOW IS TWO-WAY. SEE APPLICABLE STANDARDS.

✱✱ REDUCED POST SPACINGS WILL BE REQUIRED AT TURNOUTS AROUND RADII, AT REDUCED OFFSETS TO FACE OF FIXED OBJECTS OR AT OTHER SPECIFIED LOCATIONS. SEE PLAN DETAILS OR APPLICABLE STANDARDS. PAYMENT FOR GUARDRAIL WILL INCLUDE THE ADDITIONAL POSTS REQUIRED.

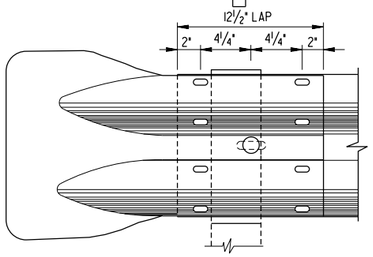

TERMINAL END PIECE (FLARED)

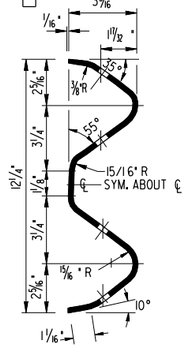

SECTION THROUGH RAIL ELEMENT

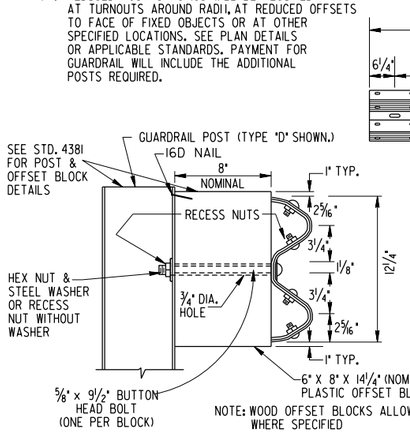

NOTE: WOOD OFFSET BLOCKS ALLOWABLE ONLY WHERE SPECIFIED

"W" BEAM OFFSET BLOCK DETAIL

NOTE: OFFSET BLOCKS FOR "W" BEAM GUARDRAIL WILL BE PLASTIC EXCEPT WHERE SPECIFIED OTHERWISE.

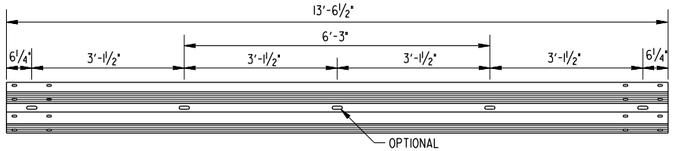

12'-6" W-BEAM SECTION

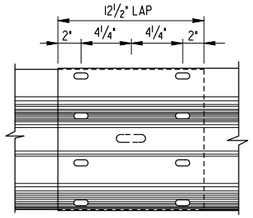

"W" BEAM SPLICE MID SPAN

NOTE:
EIGHT (8) SPLICE BOLTS REQUIRED AT ALL RAIL SPLICES

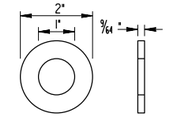

TYPE A WASHER (GALV.)

IF SLOTS IN SPECIAL END SHOE ARE 3" LONG TP. A WASHERS ARE REQ'D UNDER SPLICE BOLT HEADS & UNDER NUTS WITH 2" LONG SPLICE BOLTS. IF END SHOE SLOTS ARE 1⅛" LONG, USE NORMAL SPLICE CONNECTIONS

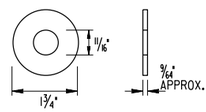

STEEL WASHER (GALV.)

(REQ'D. UNDER ⅝" HEX NUTS AND AS SPECIFIED)

SPECIAL NOTE:
ALL GUARDRAIL SPLICES WILL BE PROPERLY SECURED WITH EIGHT SPLICE BOLT CONNECTIONS. ALL NUTS WILL BE TIGHTENED. LOOSE NUTS, OMITTED BOLTS, OR OMITTED NUTS WILL BE CAUSE FOR REJECTION.

GUARDRAIL NOT ERECTED AT A 31" TOP OF RAIL HEIGHT MAY BE CAUSE FOR REJECTION.

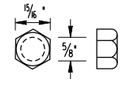

⅝" DIA. HEX NUT

L	THREAD LENGTH
1¼"	FULL LENGTH
2"	1½" MIN.
9½"	1¾" MIN.

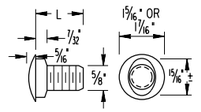

BUTTON HEAD (OR SPLICE) BOLT

(8 REQ'D PER SPLICE)

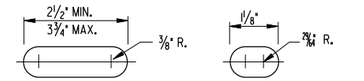

POST BOLT SLOT SPLICE BOLT SLOT

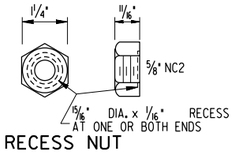

RECESS NUT

GENERAL NOTES:

1. SPECIFICATIONS: GEORGIA STANDARD CURRENT EDITION, AND SUPPLEMENTS THERETO.
2. NUTS, BOLTS, WASHERS, RAIL, TERMINAL SECTIONS, END SHOES, BACK-UP PLATES, END SECTIONS AND OTHER GUARDRAIL HARDWARE ARE IN ACCORDANCE WITH THE CURRENT ARTBA TECHNICAL BULLETIN NO. 268 -- UNLESS SPECIFIED OTHERWISE. DIMENSIONS FOR POSTS AND OFFSET BLOCKS WILL BE ACCORDING TO GA. STANDARD 438I.
3. FOR DETAILS OF GUARDRAIL ANCHORAGES, SEE APPLICABLE STANDARDS AND/OR CONSTRUCTION DETAILS.
4. FOR LOCATION OF GUARDRAIL SEE APPLICABLE LOCATION STANDARDS.
5. ALL STEEL HARDWARE COMPONENTS WILL BE GALVANIZED AFTER FABRICATION. GALVANIZING REPAIR COMPOUND (SEC. 645) WILL BE FIELD APPLIED TO ANY COATINGS DAMAGED.
6. WHEN GUARDRAIL IS REQUIRED ON CURVES WITH RADII LESS THAN 150', PRECURVED RAIL WILL BE REQUIRED.
7. PAYMENT FOR GUARDRAIL (Type "W") TO INCLUDE OFFSET BLOCKS, POST, BACK-UP PLATES WHERE REQUIRED, BOLTS, NUTS, WASHERS, TERMINAL SECTIONS, ADDITIONAL POST WHERE REQUIRED, LEAVE-OUTS INCLUDING GROUT WHERE REQUIRED, & REMOVAL AND REPLACEMENT OF PORTIONS OF MEDIAN PAVING, SPILLWAYS, OR CATCH BASINS WHERE NECESSARY.
8. ALL DIMENSIONS ARE SUBJECT TO MANUFACTURING TOLERANCES.
9. STANDARD NET LENGTH OF RAIL ELEMENTS MAY BE EITHER 12'-6" OR 25'-0". THESE LENGTHS SHALL BE ARRANGED TO PROVIDE AS NEARLY AS POSSIBLE THE REQUIRED LENGTH FOR EACH INSTALLATION.

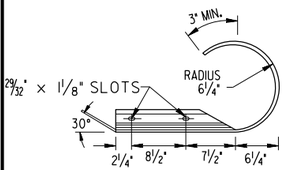

TERMINAL END PIECE (FLARED)

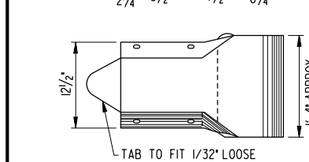

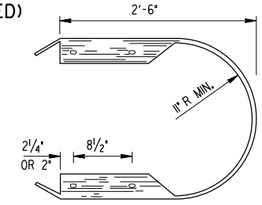

BUFFER END SECTION

(DETAILS NOT SHOWN ARE SIMILAR TO ROUNDED TERMINAL END PIECE.)

TERMINAL END PIECE (ROUNDED)

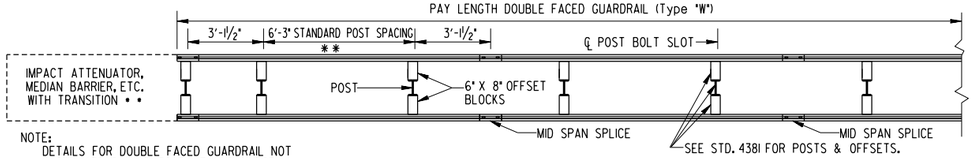

NOTE:
DETAILS FOR DOUBLE FACED GUARDRAIL NOT SHOWN ARE SIMILAR TO THAT SHOWN FOR SINGLE FACED RAIL.

DOUBLE FACED GUARDRAIL (Type "W")

NOTE:
UNLESS SPECIFIED OTHERWISE, ALL REFERENCES TO GUARDRAIL ON STANDARDS AND/OR CONSTRUCTION DETAILS WILL MEAN "W" BEAM GUARDRAIL AS SHOWN ON THIS STANDARD.

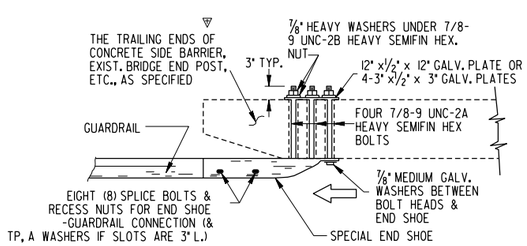

TYPICAL END SHOE CONNECTION

NOTE: THE "W" BEAM RAIL ELEMENT/END SHOE SPLICE SHALL BE LAPPED IN THE DIRECTION OF THE NEAREST TRAFFIC.

▽ "W" BEAM END CONNECTIONS ARE NOT PERMITTED AT APPROACHES TO CONCRETE STRUCTURES. SEE SEPARATE STANDARDS FOR REQUIRED "T" BEAM CONNECTIONS.

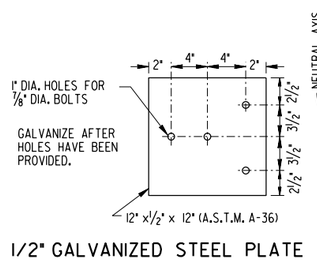

1/2" GALVANIZED STEEL PLATE

(TO BE USED WITH SPECIAL END SHOE CONNECTION UNDER NUTS & WASHERS ON BACK OF BRIDGE END POST OR BACK OF CONCRETE SIDE BARRIER) (FOUR 3" x 1½" x 3" GALV. PLATES WITH 1" DIA. HOLE CENTERED, MAY BE USED AS AN ALTERNATE)

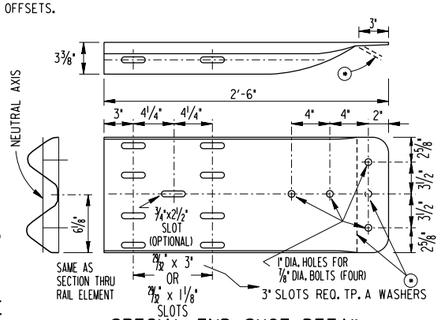

SPECIAL END SHOE DETAIL

(FOR USE IN CONNECTING GUARDRAIL TO BRIDGE END POST, CONCRETE BARRIERS, ETC.)
SPECIAL END SHOE WILL BE 10 GAUGE STEEL GALVANIZED ACCORDING TO A.A.S.H.T.O. M-111

⊙ APPLIES ONLY TO END SHOE WITH BUFFERED END ASSEMBLY OF ANCHORAGE.

BY	DATE	REVISION
PN	07-01-26	REM RECT WSHR AT TERM. POST
FBF	01-29-16	REV. W-BM BLOCK TO 8" DEPTH

DEPARTMENT OF TRANSPORTATION
STATE OF GEORGIA

STANDARD

"W" BEAM GUARDRAIL
31 INCH GUARDRAIL HEIGHT

NOT TO SCALE — AUGUST 2011

DES. ____ (SUBMITTED) Daniel C. Lass STATE DESIGN POLICY ENGR.
DRW. ____
TRA. ____ (APPROVED) Margaret B. Pirkle CHIEF ENGINEER
CHK. ____

NUMBER 4380

STATE	PROJECT NUMBER	SHEET NO.	TOTAL SHEETS
GA.			

TYPE A WOOD POST (FOR "W" BEAM GUARDRAIL)

NOTE: WOOD POST ARE ALLOWABLE ONLY WHERE SPECIFIED.

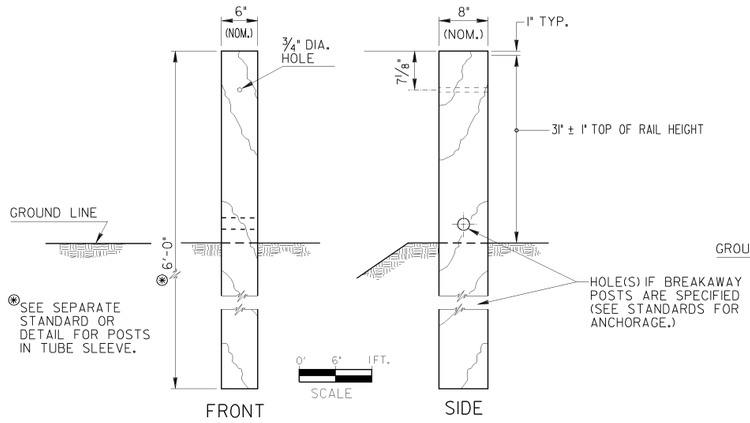

TYPE D STEEL POST (FOR "W" BEAM GUARDRAIL)

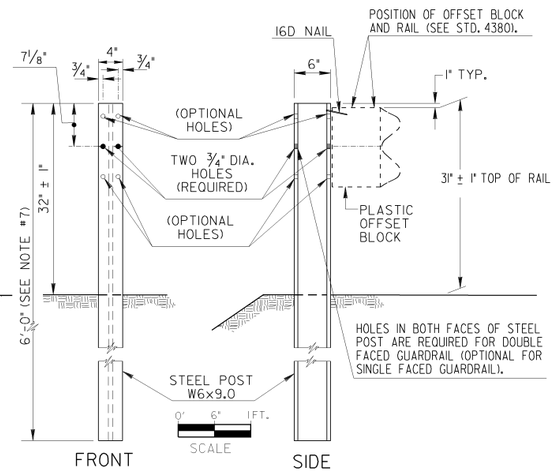

TYPE D-T STEEL POST (FOR "T" BEAM GUARDRAIL)

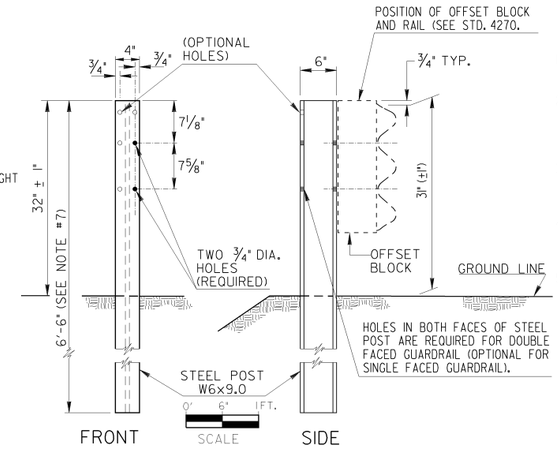

GENERAL NOTES:

1. SPECIFICATIONS GEORGIA STANDARD, CURRENT EDITION AND SUPPLEMENTS THERETO.
2. STEEL POSTS MAY BE EITHER ROLLED OR WELDED STRUCTURAL SHAPES. STEEL OFFSET BLOCKS SHALL BE ROLLED. WELDED POSTS SHALL BE SEAL WELDED BETWEEN WEB AND FLANGE BEFORE GALVANIZING.
3. WHERE WOOD POST OR WOOD OFFSET BLOCKS ARE PERMITTED, THE WOOD SHALL BE TREATED IN ACCORDANCE WITH GEORGIA STANDARD SPECIFICATIONS.
4. ALL BOLTS USED FOR FASTENING THE RAIL AND OFFSET BLOCKS TO WOOD POSTS SHALL HAVE SUFFICIENT LENGTH TO EXTEND AT LEAST 1/4" BEYOND THE FULL NUT, UP TO 3" BEYOND.
5. (a) "W" BEAM GUARDRAIL: ALL OFFSET BLOCKS SHALL BE 8" DEPTH PLASTIC BLOCKS EXCEPT FOR (d) BELOW.

   (b) "T" BEAM GUARDRAIL: STANDARD INSTALLATION WILL USE 8" DEPTH PLASTIC BLOCKS UNLESS OTHERWISE APPROVED.

   (c) 13 3/4" DEPTH MODIFIED STEEL OFFSETS MAY BE SPECIFIED WHERE JUSTIFIED FOR MORE SEVERE CONDITIONS. PAY ITEM IS --GUARDRAIL, TP T, MODIFIED OFFSET BLOCK---PER LIN. FT.

   (d) WOOD OFFSET BLOCKS MAY BE USED ONLY AT AN ISOLATED LOCATION WITHIN A RUN OF GUARDRAIL, WHERE OTHER BLOCK TYPES WOULD NOT PROVIDE PROPER FIT, AS DETERMINED BY THE ENGINEER OR SHOWN IN THE PLANS.
6. POSTS WILL BE SPACED AT 6'-3" C. TO C., UNLESS OTHERWISE NOTED.
7. ADDITIONAL LENGTH POSTS, WHERE SPECIFIED, SHALL BE 7'-0" AND 7'-6" LONG FOR "W" BEAM AND "T" BEAM GUARDRAILS RESPECTIVELY, WITH HOLES DIMENSIONED FROM THE POST-TOP THE SAME AS SHOWN.
8. 9'-0" POST REQUIRED IF GUARDRAIL INSTALLED ON A 2:1 SLOPE.
9. GROUT FILL SHALL BE A CONTROLLED LOW STRENGTH FLOWABLE FILL THAT HAS A MAXIMUM 28-DAY COMPRESSIVE STRENGTH OF 100 P.S.I. ACCORDING TO SPEC. 600.

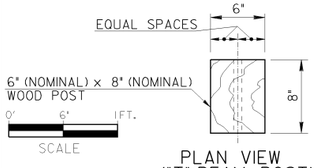

PLAN VIEW ("T" BEAM POST)

PLAN VIEW (FOR "W" BEAM OFFSET BLOCK)

WOOD POSTS AND WOOD OFFSET BLOCKS MAY BE ROUGH OR SURFACED.

DIMENSIONS FOR WOOD POSTS AND WOOD OFFSET BLOCKS ARE NOMINAL IN ACCORDANCE WITH ACCEPTED LUMBER INDUSTRY STANDARDS.

NOTE:
WHERE WOOD OFFSET BLOCK ON STEEL POST IS PERMITTED IN "W" BEAM INSTALLATION, A NAIL OR SCREW FROM POST TO WOOD IS REQUIRED TO PREVENT ROTATION OF THE BLOCK.

MODIFIED STEEL OFFSET BLOCK FOR "T" BEAM GUARDRAIL

NOTE: MODIFIED STEEL OFFSET BLOCK ARE USED ONLY WHERE SPECIFIED SEE NOTE 5(c)

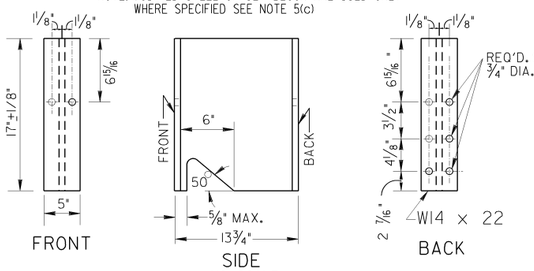

BACK-UP PLATE (FOR "T" BEAM GUARDRAIL)

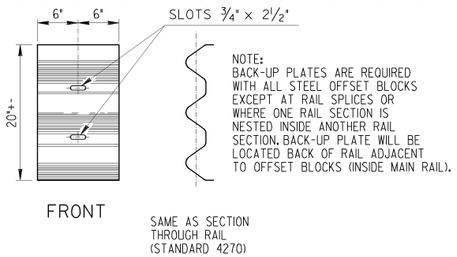

ADDITIONAL DEPTH OFFSET BLOCKOUTS

(FOR USE WHERE GREATER THAN STANDARD OFFSET IS SPECIFIED)

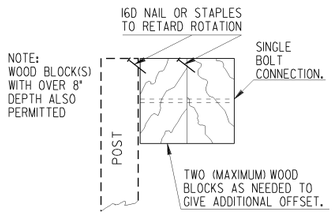

NOTE: ADDITIONAL DEPTH OFFSETS BELOW ARE SHOWN FOR "W" BEAM. SIMILAR OFFSETS MAY BE APPLIED FOR "T" BEAM GUARDRAIL.

NOTE: ADDITIONAL DEPTH OFFSETS ARE PERMITTED ONLY WHERE AN ISOLATED POST MUST BE PLACED AT A GREATER THAN NORMAL OFFSET.

NOTE: FOR BLOCK CONNECTION TO POST AND TO RAIL SEE STD. 4380 OR 4385.

GUARDRAIL POST DETAILS IN ASPHALT OR CONCRETE PAVEMENT APPLICATIONS

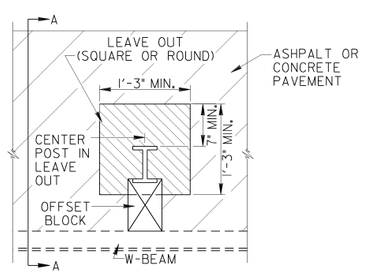

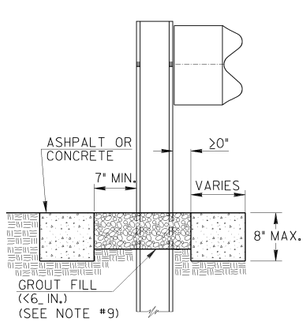

WOOD OFFSET BLOCKS

(WHERE PERMITTED, SEE NOTE 5(d))

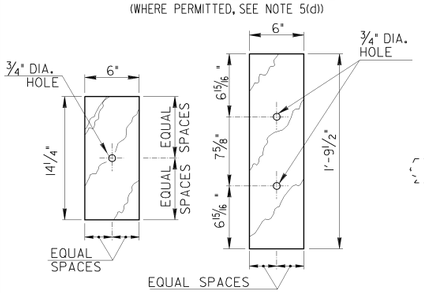

(PLAN VIEW IS SAME AS SHOWN FOR WOOD POST ABOVE)

STANDARD PLASTIC OFFSET BLOCKS

NOTE: PLASTIC OFFSET BLOCKS SHALL BE OF TYPE LISTED IN GA. DOT QPL OF APPROVED PRODUCTS OR PER STANDARD SPECIFICATIONS.

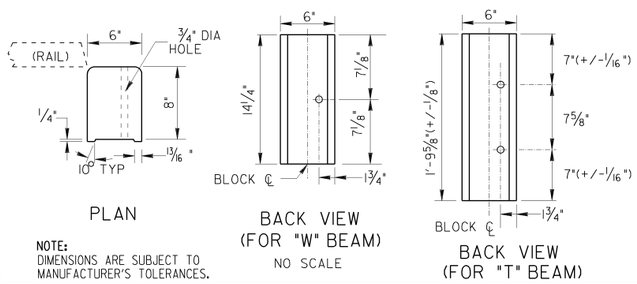

CONCRETE FOUNDATION FOR POST IN SHALLOW FILLS OVER CULVERTS OR OTHER OBSTRUCTIONS

(NOTE: PLATE MOUNTED POST MAY BE USED AS AN ALTERNATE, SEE SEPARATE SHEET).

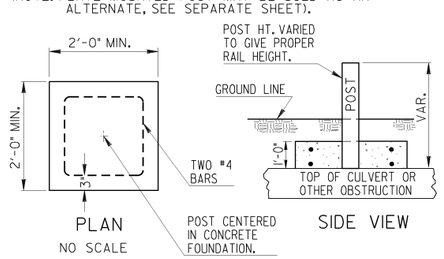

STEEL POST TO BE PLUMBED AND FOUNDATION CONCRETE POURED AROUND POST TO FINISHED ELEVATION.

PAYMENT FOR GUARDRAIL TO INCLUDE ALL EXTRA WORK AND MATERIALS INCLUDING CONCRETE (CL. A OR CL. B) AND NO. 4 BARS.

IF OFFSET FROM RAIL FACE TO HEADWALL IS LESS THAN 4'-3", POST SPACINGS ARE REDUCED TO 3'-1 1/2" C.C. ACROSS THE CULVERT WITH 7 SUCH SPACINGS IN ADVANCE AT NO ADDITIONAL PAYMENT.

2:1 SLOPE DETAIL

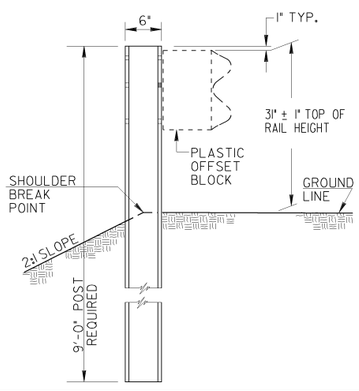

BY	DATE	REVISION
FBF	1-29-16	REV. W-BM BLOCK TO 8" DEPTH
		ADDED MOW STRP/ROD PAV.
		INSTALLATION DETAILS

DEPARTMENT OF TRANSPORTATION
STATE OF GEORGIA

STANDARD
POSTS AND OFFSET BLOCKS FOR "W" & "T" BEAM GUARDRAIL 31 INCH GUARDRAIL HEIGHT

SCALE: AS SHOWN — AUGUST 2011

DES.	G.L.O.	(SUBMITTED)	
DRW.	G.L.O.	STATE DESIGN POLICY ENGINEER	
CHK.	B.R.E.	(APPROVED) Margaret B Pirkle	
REVIEW	B.A.S.	CHIEF ENGINEER	

NUMBER 4381

STATE	PROJECT NUMBER	SHEET NO.	TOTAL SHEETS
GA.			

31INCH HEIGH GUARDRAIL CONNECTION AT TRAILING ENDS

(SEE NOTE AT BOTTOM LEFT)

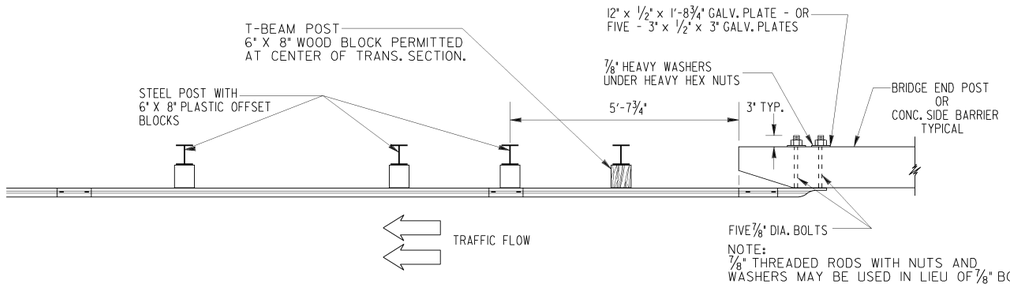

PLAN

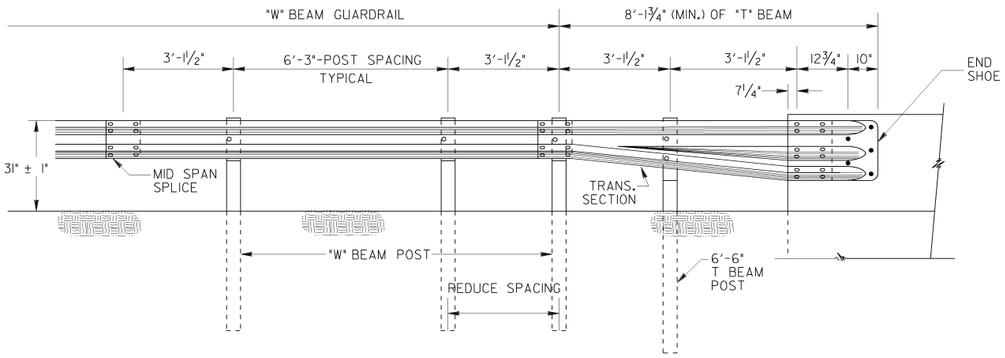

ELEVATION

NOTE:
DETAILS AT TOP LEFT ARE APPLICABLE FOR CONNECTIONS AT THE TRAILING ENDS OF ONE-WAY TRAFFIC OR AT THE TRAILING END OF MULTI-LANE (4 OR MORE) FACILITIES.

NOTE:
DETAILS AT TOP RIGHT ARE APPLICABLE FOR CONNECTIONS AT THE APPROACH ENDS OF BRIDGES OR CONCRETE SIDE BARRIERS OR AT ALL FOUR ENDS FOR TWO-LANE, TWO WAY TRAFFIC.

GUARDRAIL CONNECTION AT BRIDGE END (OR CONCRETE BARRIER)

(DETAILS ARE ILLUSTRATED WITH APPROACH SLAB, SPILLWAY, ETC. FOR TYPICAL BRIDGE END, POST SPACINGS AND END SHOE CONNECTION APPLIES TO ROADWAY CONCRETE BARRIER AS WELL AS BRIDGE ENDS.)

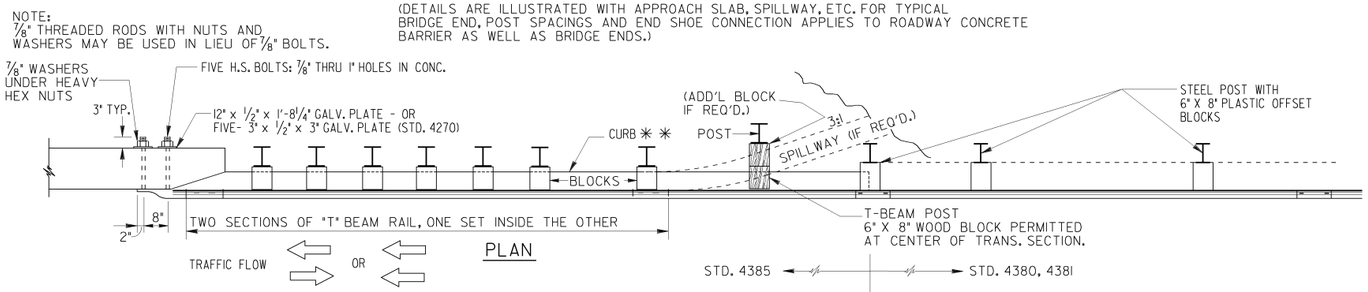

PLAN

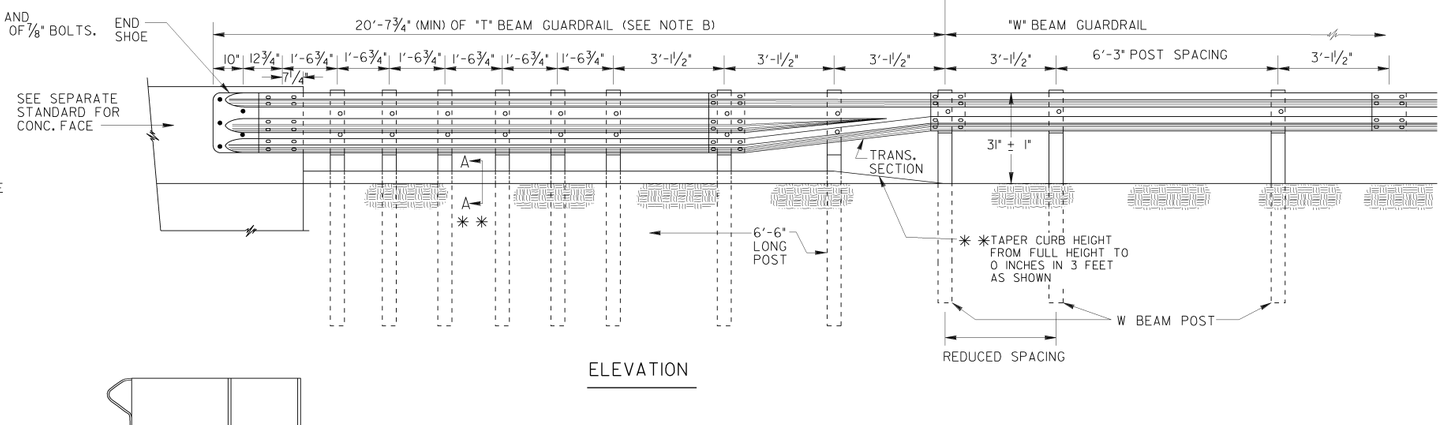

ELEVATION

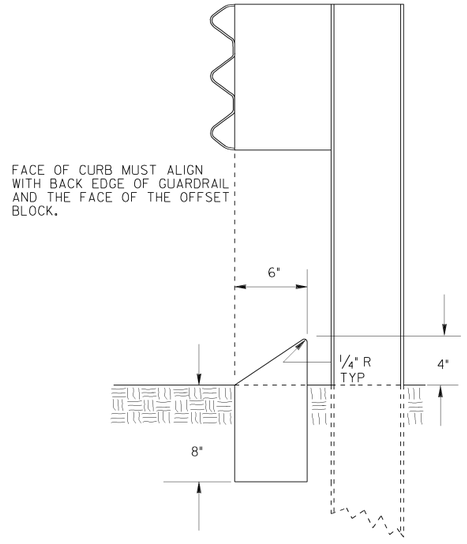

SECTION A-A * *

NOTES FOR GUARDRAIL CONNECTION:

A. WHERE GREATER THAN THE MINIMUM LENGTH OF T-BEAM GUARDRAIL IS REQUIRED ADDITIONAL POST REMAIN AS SHOWN WITHIN THE FIRST 20'-7¾" LENGTH, WITH NORMAL (6'-3" C. TO C.) SPACINGS FOR THE REMAINDER OF THE INSTALLATION (STD. 4385) UNLESS SPECIFIED OTHERWISE.

B. PAYMENT FOR GUARDRAIL TYPE T INCLUDES ALL ADDITIONAL POST, ALL ADDITIONAL OFFSET BLOCKS, THE SPECIAL END SHOE CONNECTION WITH ACCOMPANY HARDWARE, THE EXTRA SECTION OF "T" BEAM RAIL NESTED INSIDE THE OTHER, AND THE "T" BEAM TO "W" BEAM TRANSITION SECTION.

C. WHERE GUARDRAIL POST ARE ERECTED THRU SPILLWAY, CONCRETE CAP OR PAVING UNDER GUARDRAIL, PAYMENT FOR GUARDRAIL, OF ANY TYPE SHALL INCLUDE REPLACING THE BLOCKED OUT CONCRETE AND/OR REMOVING AND REPLACING PORTIONS OF SPILLWAY, CONCRETE, OR GROUT AS NECESSARY FOR POST INSTALLATIONS.

* * FOR CURB DETAILS ASSOCIATED WITH APPROACH SLAB, SEE APPROACH SLAB STANDARD. FOR GUARDRAIL INSTALLATION LOCATIONS WHERE AN APPROACH SLAB IS NOT USED, PROVIDE A CONCRETE CURB IN ACCORDANCE WITH SECTION "A-A". CONCRETE CURB SHALL BE PAID FOR PER LINEAR FOOT.

NOTE: POST SPACINGS SHOWN ARE TYPICAL AVERAGE WITH NORMAL CONSTRUCTION TOLERANCES ALLOWED.

GENERAL NOTES:

1. SPECIFICATIONS: GEORGIA STANDARD, CURRENT EDITION & SUPPLEMENTS THERETO.
2. FOR DETAILS OF GUARDRAIL HARDWARE, POST, OFFSET BLOCKS, END SHOE, TRANSITION SECTION, ETC., SEE SEPARATE STANDARDS AS APPLICABLE.
3. GUARDRAIL INSTALLATIONS, INCLUDING ANCHORAGES AND CONNECTIONS, ARE TO BE COMPLETED BEFORE BEING SUBJECT TO TRAFFIC UNLESS OTHERWISE APPROVED.
4. OFFSET BLOCKS SHALL BE PLASTIC UNLESS SPECIFIED OTHERWISE. OFFSET BLOCKS ARE REQUIRED AT ALL POSTS.
5. THE COST FOR DRILLING HOLES FOR THE END SHOE CONNECTION SHALL BE INCLUDED IN THE UNIT BID PRICE FOR THE GUARDRAIL.

BY	REVISION	DATE
FBF	REV W-BM BLOCK TO 8"	1-29-16

DEPARTMENT OF TRANSPORTATION
STATE OF GEORGIA

STANDARD

GUARDRAIL CONNECTION AT BRIDGE END OR AT CONCRETE BARRIER END FOR 31INCH HIGH GUARDRAIL

NO SCALE — AUGUST 2011

DES. G.L.O. (SUBMITTED) STATE DESIGN POLICY ENGINEER
DRW. G.L.O.
CHK. B.R.E.
REVIEW B.A.S. (APPROVED) Margaret B Pitelo CHIEF ENGINEER

NUMBER 4382

GDOT Georgia Department of Transportation | P. I. No.

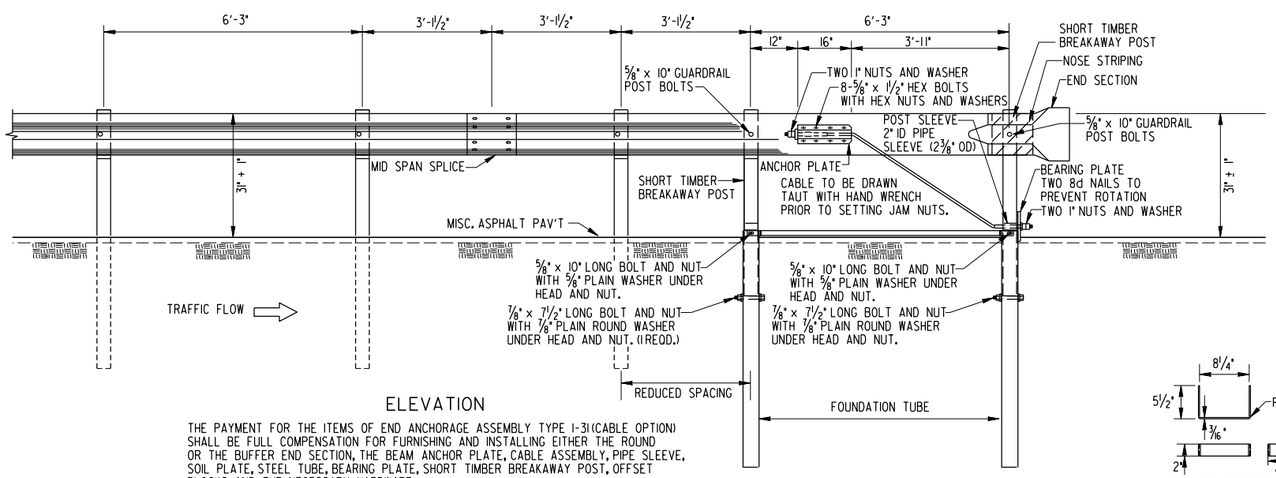

ELEVATION

THE PAYMENT FOR THE ITEMS OF END ANCHORAGE ASSEMBLY TYPE 1-31 (CABLE OPTION) SHALL BE FULL COMPENSATION FOR FURNISHING AND INSTALLING EITHER THE ROUND OR THE BUFFER END SECTION, THE BEAM ANCHOR PLATE, CABLE ASSEMBLY, PIPE SLEEVE, SOIL PLATE, STEEL TUBE, BEARING PLATE, SHORT TIMBER BREAKAWAY POST, OFFSET BLOCKS AND THE NECESSARY HARDWARE.

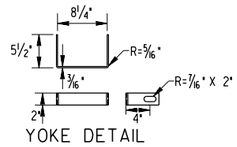

YOKE DETAIL

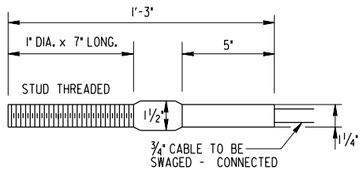

SWAGED FITTING AND STUD

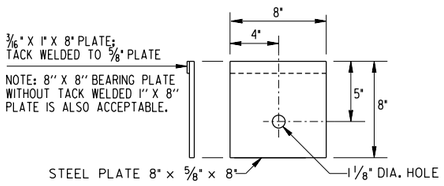

BEARING PLATE

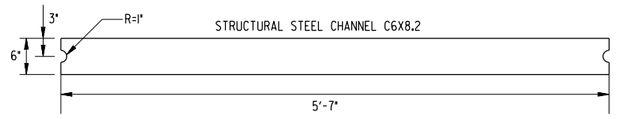

STRUT DETAIL



PLAN

FRONT VIEW

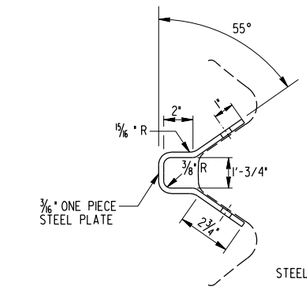

ANCHOR PLATE DETAIL

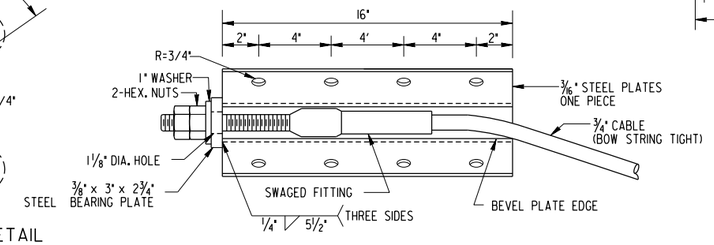

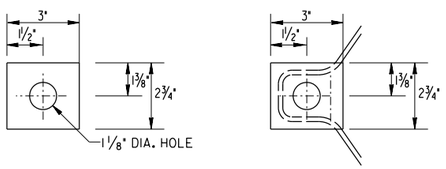

ANCHOR PLATE BEARING PLATE DETAIL

NOTE:
ANCHOR PLATES SHOWN HERE WITH GUARDRAIL (TYPE 'W') ATTACHMENT TO GUARDRAIL (TYPE 'T') WILL BE THE SAME EXCEPT THAT THE ANCHOR PLATE WILL BE LOCATED BETWEEN THE BOTTOM AND MIDDLE CORRUGATIONS.

STANDARD ANCHOR PLATE DETAILS

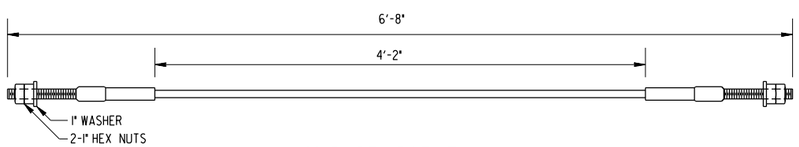

ANCHOR CABLE

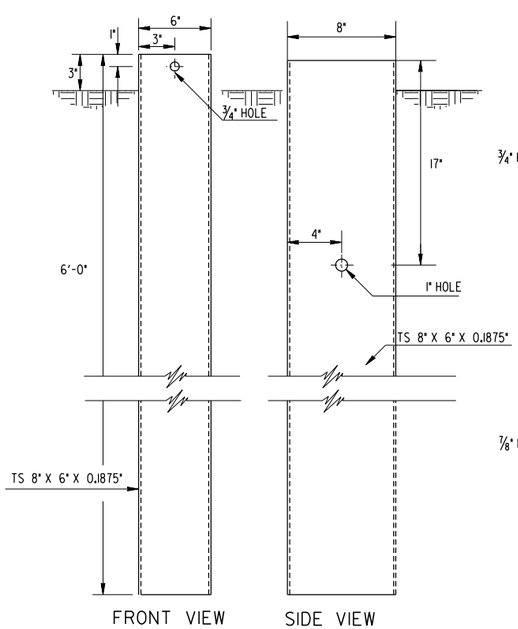

FRONT VIEW SIDE VIEW

FOUNDATION TUBE

NOTE: SEE STANDARD 4382 FOR GUARDRAIL CONNECTION TO CONCRETE FACE.

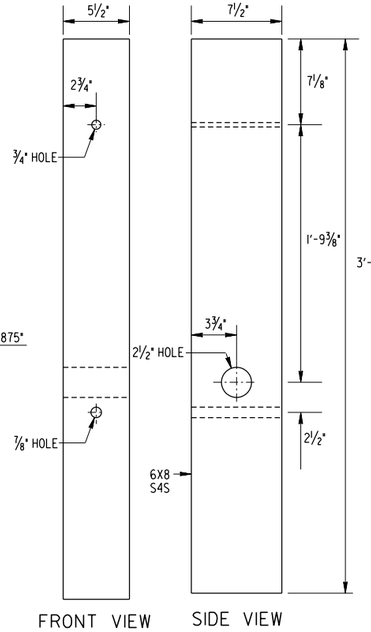

FRONT VIEW SIDE VIEW

SHORT TIMBER BREAKAWAY POST

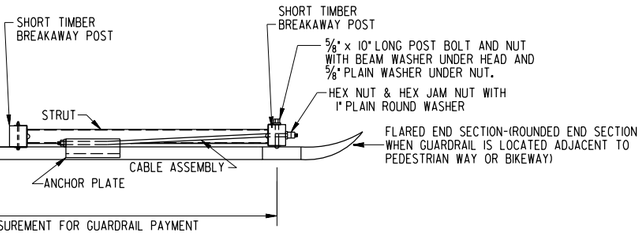

CABLE ANCHOR

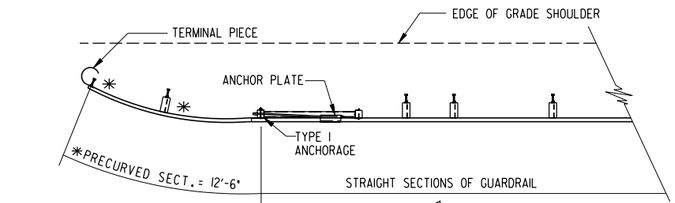

* PRECURVED SECTION SHALL UTILIZE POST OF THE SAME LENGTH AS REQUIRED FOR THE ADJOINING STRAIGHT SECTIONS, REGARDLESS OF DISTANCE TO GRADED SHOULDER EDGE.

AT TRAILING END OF TWO-WAY TRAFFIC
(WHICH FALLS OUTSIDE CLEAR ZONE OF OPPOSING TRAFFIC)

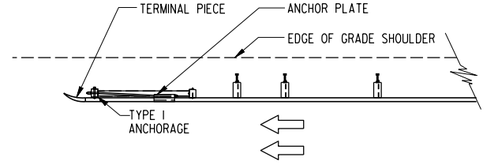

AT TRAILING END OF ONE-WAY TRAFFIC

NOTE:
SEE STD. 4388 OR OTHER APPLICABLE DETAILS FOR REQUIREMENT FOR TYPE 12 ANCHORAGE ON THE TRAILING END.

GENERAL NOTES:

1. SPECIFICATIONS: GEORGIA STANDARD, CURRENT EDITION & SUPPLEMENTS THERE TO.
2. FOR DETAILS OF GUARDRAIL HARDWARE, POST, OTHER TYPE ANCHORAGE, LOCATION, ETC. SEE SEPARATE STANDARDS AS APPLICABLE.
3. GUARDRAIL INSTALLATIONS, INCLUDING ANCHORAGES AND CONNECTIONS, ARE TO BE COMPLETED BEFORE BEING SUBJECT TO TRAFFIC UNLESS OTHERWISE APPROVED.
4. PAYMENT FOR ANCHORAGE INCLUDES ANCHOR PLATE; ¾" CABLE; BREAKAWAY POSTS; FOUNDATION TUBES; STRUT AND ALL ACCOMPANYING HARDWARE.

BY	REVISION	DATE
P.JN	ADD WELD TO STL BEARING PLATE AND ANCHOR PLATE.	07-01-26
	REM RECT WSHR FM POST 1	

DEPARTMENT OF TRANSPORTATION
STATE OF GEORGIA

STANDARD

GUARDRAIL ANCHORAGE TYPE 1
31 INCH GUARDRAIL HEIGHT

NOT TO SCALE | AUGUST 2011

DES. G.L.O.
DRW. G.L.O.
TRA. B.R.E.
CHK. B.A.S.

(SUBMITTED) Daniel G. Lau
STATE DESIGN POLICY ENGINEER

(APPROVED) Margaret B. Pinkle
CHIEF ENGINEER

NUMBER 4383

GDOT Georgia Department of Transportation | P. I. No.

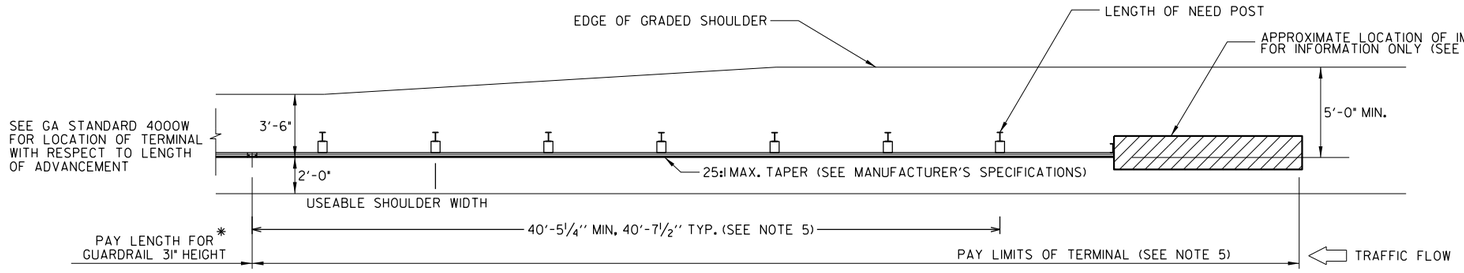

TYPE 12A - 31" GUARDRAIL TERMINAL
(TANGENT, ENERGY-ABSORBING)

* 6'-3" MIN. BETWEEN TERMINAL AND ANY CURVE OR T-BEAM

GENERAL NOTES:

1. SPECIFICATIONS: GEORGIA STANDARD CURRENT EDITION, AND SUPPLEMENTS THERETO.
2. SEE GDOT QPL 64 FOR APPROVED PRODUCTS.
3. THIS SHEET DEPICTS THE PAY LIMITS FOR GUARDRAIL AND TYPE 12 TERMINALS. TYPE 12 TERMINALS SHALL BE INSTALLED ACCORDING TO MANUFACTURER'S RECOMMENDATIONS.
4. W-BEAM INSTALLATIONS LESS THAN 150 FEET IN ADVANCE OF ANY SHIELDED OBJECT OR TOTAL LENGTH OF W-BEAM INSTALLATION IS LESS THAN ABOUT 150 FEET, AN ENGERGY-ABSORBING TERMINAL SHOULD BE SELECTED.
5. TYPE 12A TERMINAL PAY LIMITS VARY BY PRODUCT. DESIGN SHALL ACCOUNT FOR 57'-1½" PAY LIMIT. CONTRACTOR SHALL PROVIDE 40'-5¼" MIN, 40'-7½" TYP (DEPENDENT ON TERMINAL SELECTED) TO THE LENGTH OF NEED POST WITHIN THE TERMINAL PAY LIMITS REGARDLESS OF TERMINAL SELECTED.

ITEM NO.	UNITS	DESCRIPTION
641-5015	EA	GUARDRAIL TERMINAL, TP 12A - 31", TANGENT, ENERGY-ABSORBING
641-5020	EA	GUARDRAIL TERMINAL, TP 12B - 31", FLARED, ENERGY-ABSORBING
641-5025	EA	GUARDRAIL TERMINAL, TP 12C - 31", FLARED, NON-ENERGY-ABSORBING

TYPE 12B & TYPE 12C FOR MAINTENANCE REPAIRS ONLY

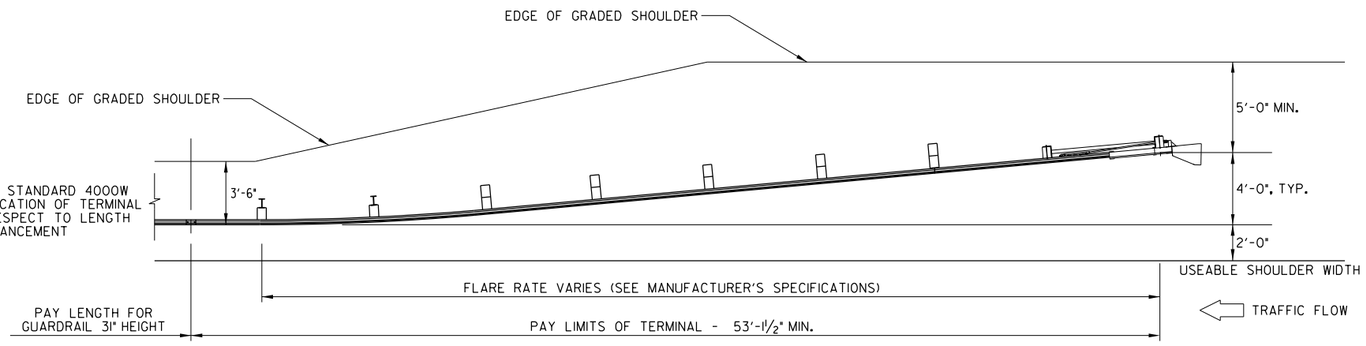

TYPE 12B - 31" GUARDRAIL TERMINAL
(FLARED, ENERGY-ABSORBING)
FOR MAINTENANCE REPAIRS ONLY

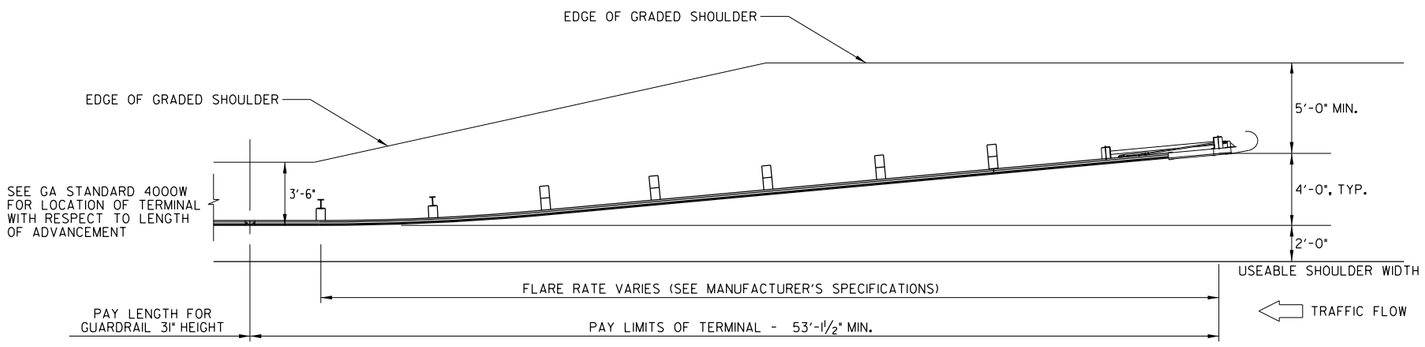

TYPE 12C - 31" TERMINAL
(FLARED, NON-ENERGY-ABSORBING)
FOR MAINTENANCE REPAIRS ONLY

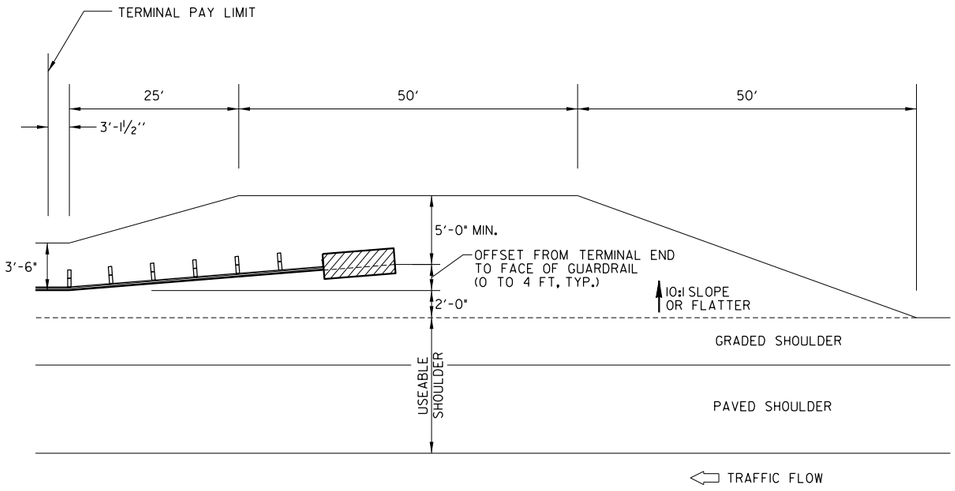

TERMINAL PAD GRADING DETAIL

REVISION	DATE	BY
REV. PAY LIMIT, ADD TERM. HEAD.	07-01-26	PN
TYPE 12B & 12C TO M.R.O.	01-29-16	FBF
ADDED 12A, 12B, & 12C; ADDED GRADING DETAIL		

DEPARTMENT OF TRANSPORTATION
STATE OF GEORGIA

STANDARD GUARDRAIL TERMINALS TYPE 12A, 12B, AND 12C 31 INCH GUARDRAIL HEIGHT

NOT TO SCALE — AUGUST 2011

DES. ____ DRW. ____ TRA. ____ CHK. ____

(SUBMITTED) Daniel C. Ross — STATE DESIGN POLICY ENGR.

(APPROVED) Margaret B Rivels — CHIEF ENGINEER

NUMBER 4384

STATE	PROJECT NUMBER	SHEET NO.	TOTAL SHEETS
GA.			

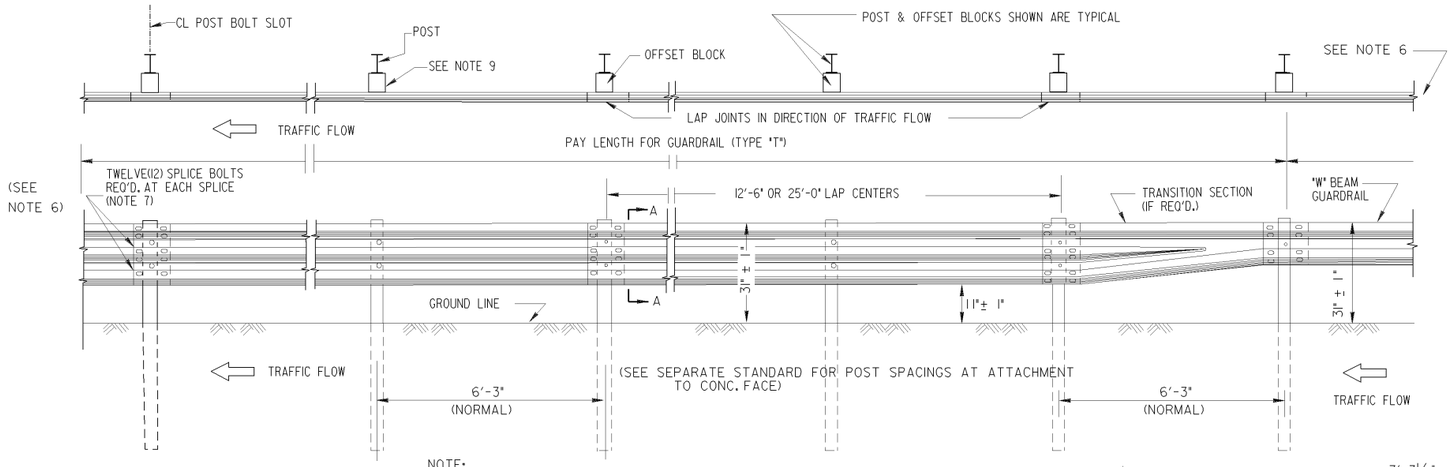

NOTE:
WHERE ATTACHED TO CONCRETE BARRIER, BRIDGE END POST OR OTHER CONCRETE FACE, PAYMENT FOR T BEAM GUARDRAIL SHALL INCLUDE ADDITIONAL POSTS, OFFSET BLOCKS AND DOUBLE THICKNESS (ONE RAIL NESTED INSIDE ANOTHER) SECTION OF T BEAM GUARDRAIL AS SPECIFIED.

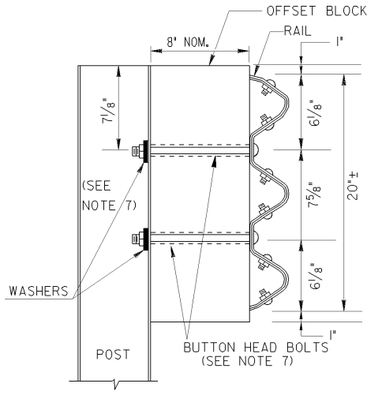

SECTIONAL VIEW
(GUARDRAIL TP. T-LIN. FT.)

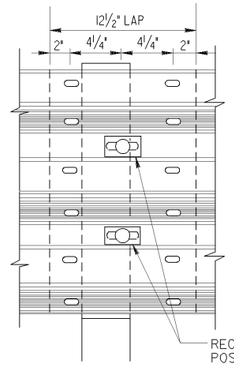

"T" BEAM SPLICE AT POST

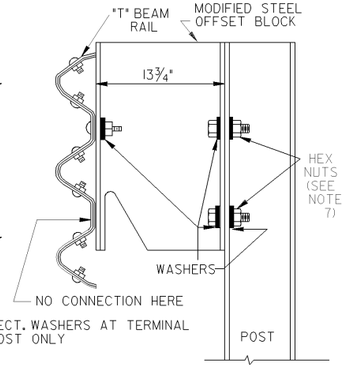

SECTIONAL VIEW
(GUARDRAIL TP. T,
MODIFIED OFFSET BLOCK)

NOTE:
13¾" DEPTH MODIFIED STEEL OFFSETS BLOCKS MAY BE SPECIFIED WHERE JUSTIFIED FOR MORE SEVERE CONDITIONS. PAY ITEM IS --GUARDRAIL, TP T, MODIFIED OFFSET BLOCK---PER LIN. FT.

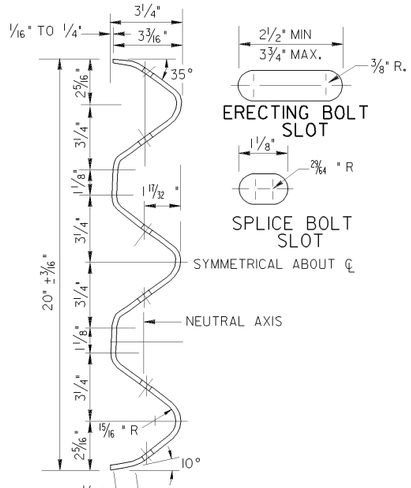

SECTION THROUGH
RAIL ELEMENT (SEC. A-A)

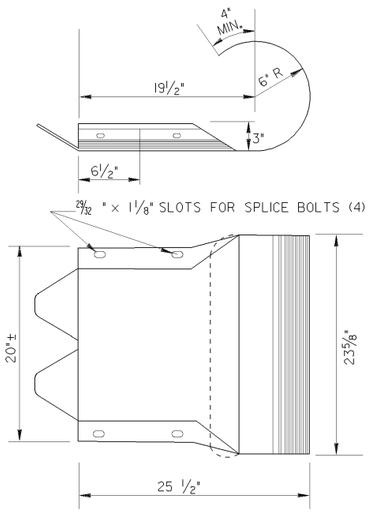

ROUNDED TERMINAL SECTION
TO BE LAPPPED ON TRAFFIC FACE OF RAIL WHERE TYPE I ANCHORAGE IS REQUIRED

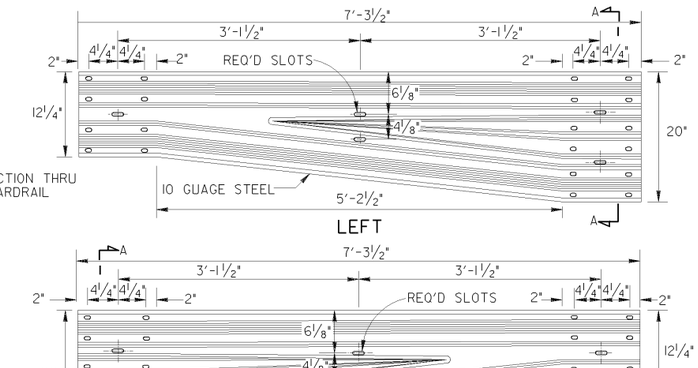

LEFT

SAME AS SECTION THRU "W" BEAM GUARDRAIL

RIGHT
TRANSITION SECTION

SAME AS SECTION THRU "W" BEAM GUARDRAIL

GENERAL NOTES:

1. SPECIFICATIONS: GA. STANDARD CURRENT EDITION & SUPPLEMENTS THERETO
2. DIMENSIONS ARE SUBJECT TO MANUFACTURING TOLERANCES.
3. NET LENGTH OF RAIL ELEMENTS MAY BE EITHER 12'-6" OR 25'-0".
4. RAIL ELEMENTS ON CURVES OF RADII LESS THAN 150' WILL BE PRECURVED.
5. PAYMENT FOR GUARDRAIL (TYPE "T") WILL INCLUDE ALL POSTS, BLOCKS, HARDEWARE ACCESSORIES AND WHERE REQUIRED ALL ADDITIONAL POSTS, END SHOES, TERMINAL SECTIONS, TRANSITION SECTIONS, BACK-UP PLATES AND REMOVAL AND REPLACEMENT OF PORTIONS OF MEDIAN PAVING, SPILLWAYS OR CATCH BASINS WHERE NECESSARY.
6. ALL GUARDRAIL TERMINALS SHALL REQUIRE AN APPROVED ANCHORAGE AS SPECIFIED IN IN THE PLANS OR APPROVED BY THE ENGINEER EXCEPT WHERE CONNECTED TO A BRIDGE END OR OTHER CONCRETE FACE.
7. NUTS, BOLTS AND WASHERS WHICH ARE NOT DETAILED ON THIS STANDARD, SHALL BE AS SHOWN FOR W BEAM GUARDRAIL ON STANDARD 4380.
8. SEE SEPARATE STANDARDS AS APPLICABLE FOR ANCHORAGES, POSTS, OFFSET BLOCKS, CONNECTIONS TO CONCRETE FACE, W BEAM GUARDRAIL, ETC.
9. SEE STANDARD 4381 FOR DETAILS AND REQUIREMENTS OF BACK-UP PLATES, WHERE STEEL OFFSET BLOCKS ARE ALLOWED OR SPECIFIED.
10. OFFSET BLOCKS SHALL BE PLASTIC UNLESS OTHERWISE APPROVED OR SPECIFIED.

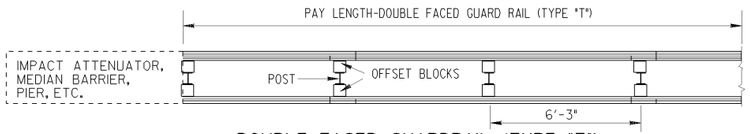

DOUBLE FACED GUARDRAIL (TYPE "T")

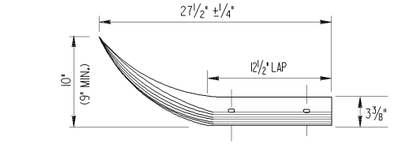

THE FLARED TERMINAL SECTION MAY BE USED AS AN ALTERNATE TO THE ROUND TERMINAL SECTION.

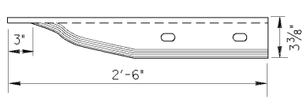

SPECIAL END SHOE WILL BE 10 GUAGE STEEL GALVANIZED ACCORDING TO A.A.S.H.T.O. M-111

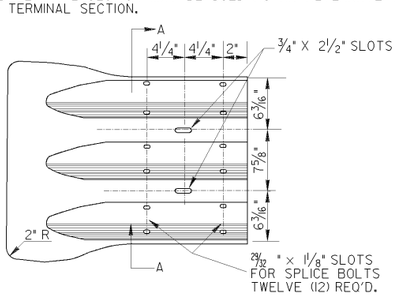

FLARED TERMINAL SECTION

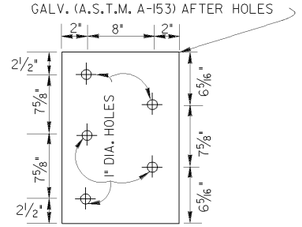

½" GALVANIZED STEEL PLATE
(FOR USE WITH END SHOE CONN.)
ALTERNATE: FIVE 3" x ½" x 3" GALV. PLATES WITH 1" DIA. HOLE CENTERED, GALV. AFTER HOLES.

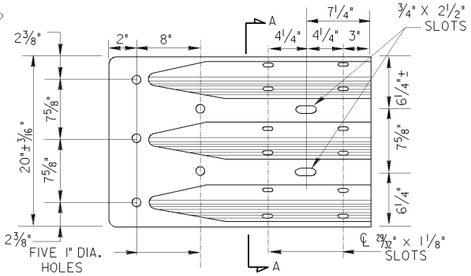

"T" BEAM SPECIAL END SHOE

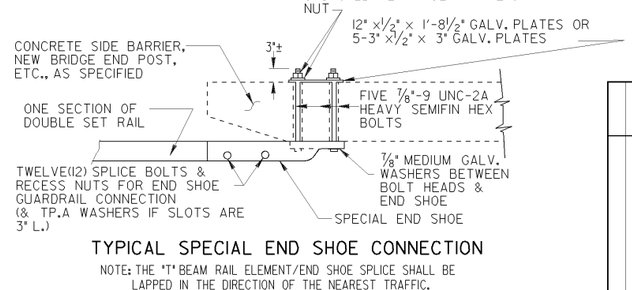

TYPICAL SPECIAL END SHOE CONNECTION
NOTE: THE "T" BEAM RAIL ELEMENT/END SHOE SPLICE SHALL BE LAPPED IN THE DIRECTION OF THE NEAREST TRAFFIC.

DEPARTMENT OF TRANSPORTATION
STATE OF GEORGIA

STANDARD
"T" BEAM GUARDRAIL
CONNECTION TO 31 INCH HEIGHT "W" BEAM

NO SCALE — AUGUST 2011

DATE	REVISION	BY
		DES. G.L.O.
		DRW. G.L.O.
		CHK. B.R.E.
		REVIEW B.A.S.

(SUBMITTED) STATE DESIGN POLICY ENGINEER

(APPROVED) Donald M Rus CHIEF ENGINEER

NUMBER 4385

STATE	PROJECT NUMBER	SHEET NO.	TOTAL SHEETS
GA.			

GUARDRAIL LOCATIONS IN MEDIANS

20 10 0 20 FT.
SCALE

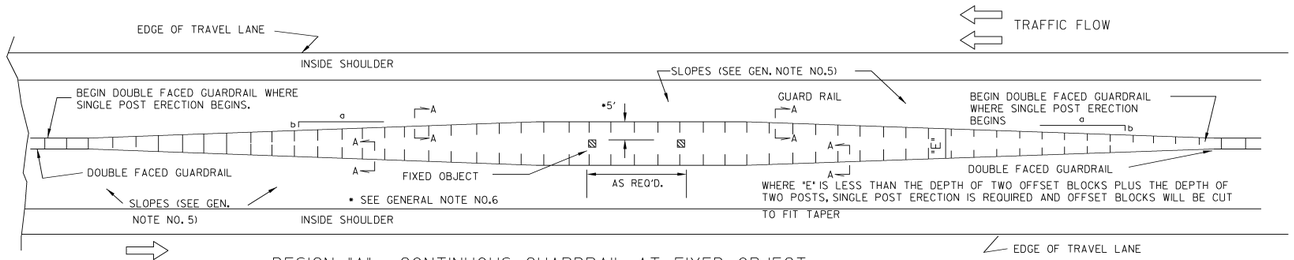

DESIGN "A" - CONTINUOUS GUARDRAIL AT FIXED OBJECT

NOTE: DESIGN 'A' IS OF LIMITED APPLICATION. SEE SEPARATE STANDARDS OR DETAILS FOR DOUBLE FACED GUARDRAIL ON INSIDE SHOULDERS OF MEDIANS OR FOR CONCRETE MEDIAN BARRIERS AT FIXED OBJECTS.

GUARDRAIL LOCATIONS AT TURNOUTS

NO SCALE

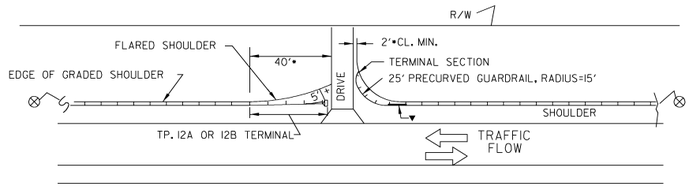

NOTE:
PRECURVED GUARDRAIL WILL BE REQUIRED WITH RADII LESS THAN 150'.

NOTE: GUARDRAIL IS NOT REQUIRED ON BOTH SIDES OF DRIVEWAY UNLESS CONDITIONS WARRANT

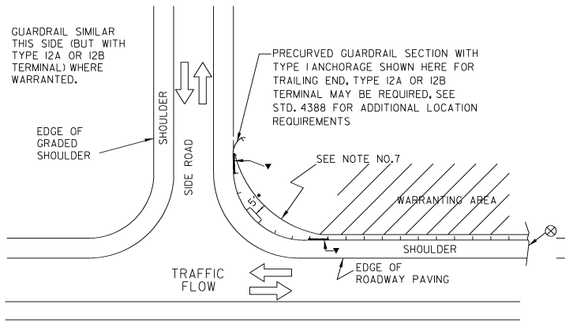

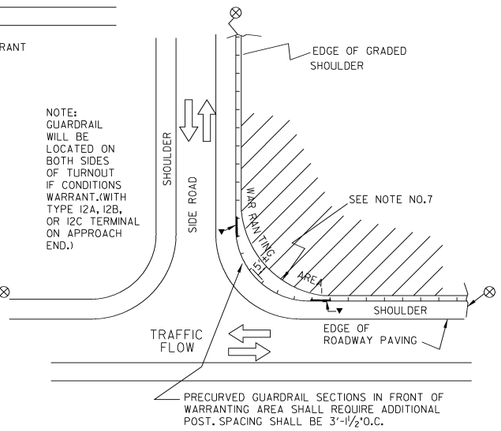

▼ - TYPE I ANCHORAGE

⊗ - EXTENDED GUARDRAIL TO HAVE TERMINAL OR ATTACHMENT PER APPLICABLE STANDARD DETAILS.

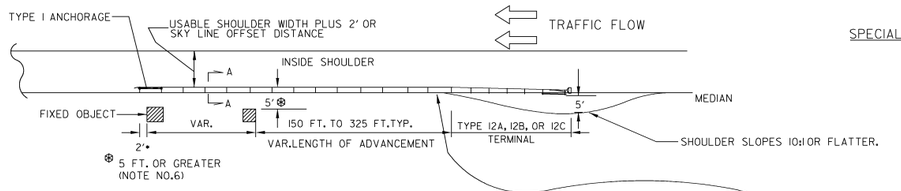

DESIGN "C"-GUARDRAIL ON INSIDE SHOULDERS AT FIXED OBJECTS

NOTE: GUARDRAIL PROTECTION SHALL BE REQUIRED ON BOTH SIDES OF OBJECT FOR DESIGN "C", UNLESS OTHERWISE SPECIFIED.

SPECIAL NOTE: FOR CONTINUOUS DOUBLE FACED GUARDRAIL ON THE INSIDE SHOULDER OF MEDIAN, SEE SEPARATE DETAILS.

FLARE RATE:DESIGN"A","B",&"D"			
DESIGN SPEED (mph)	SHY-LINE OFFSET (ft)	MAX.FLARE RATE (a/b)	
		BARRIER INSIDE SHY-LINE	BARRIER AT OR BEYOND SHY-LINE
70	9	30	15
60	8	26	14
55	7	24	12
50	6.5	21	11
45	6	18	10
40	5	16	8
30	4	13	7

IF THE OFFSET FROM THE EDGE OF THE TRAVEL LANE TO THE FACE OF THE GUARDRAIL AT ANY POINT ALONG THE INSTALLATION IS LESS THAN THE SHY-LINE OFFSET, USE THE FLATTER RATES GIVEN IN THE TABLE.

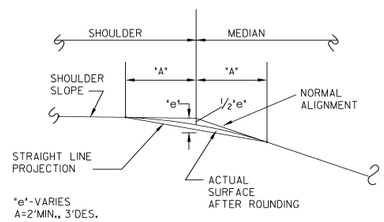

DETAIL OF SHOULDER ROUNDING

(TYPICAL FOR EXISTING GUARDRAIL INSTALLATIONS ON 6:1 OR ON 8:1 SLOPE)

GENERAL NOTES:

1. SPECIFICATIONS: GEORGIA STANDARD, CURRENT EDITION, AND SUPPLEMENTS THERETO.
2. FOR DETAILS OF GUARDRAIL HARDWARE, POST, AND OFFSET BLOCKS, SEE STANDARDS 4381 AND 4382.
3. FOR DETAILS OF GUARDRAIL TERMINALS AND ANCHORAGES, SEE SEPARATE STANDARDS, OR CONSTRUCTION DETAILS AS APPLICABLE.
4. FOR DETAILS OF DOUBLE FACED GUARDRAIL ATTACHED TO OR TERMINATED AT CONCRETE MEDIAN BARRIER, SEE STANDARD 4940.
5. NEGATIVE SLOPES IN FRONT OF GUARDRAIL AND ALL TERMINALS SHALL BE 10:1, OR FLATTER, FOR ALL NEW INSTALLATIONS.
6. OFFSET BETWEEN FACE OF GUARDRAIL AND FACE OF FIXED OBJECT SHALL BE 5FT.+DESIRABLE, 4'-3"MINIMUM, WHERE AN OFFSET OF LEAST 4'-3" CANNOT BE OBTAINED, DOUBLE POST SPACINGS (3'-1½" O.C.) IN FRONT OF OBJECT PLUS A MINIMUM OF 7 SUCH SPACINGS IN ADVANCE OF OBJECT IS REQUIRED WITH A 3 FT. MINIMUM OFFSET.
7. WHERE PRECURVED GUARDRAIL IS INSTALLED AROUND RADII AT INTERSECTING SIDE ROADS, THE SHOULDER AREA BACK OF THE GUARDRAIL IS TO BE WIDENED AS SHOWN ABOVE WITH THE OFFSET BETWEEN THE TRAVEL LANE AND GUARDRAIL REMAINING APPROXIMATELY CONSTANT.

NOTE: SEE SEPARATE STANDARDS FOR GUARDRAIL CONNECTIONS AND POST SPACINGS AT BRIDGE ENDS

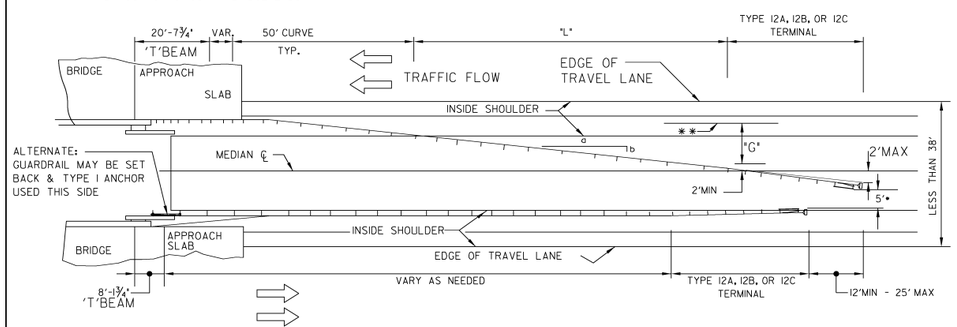

DESIGN "D"-GUARDRAIL AT BRIDGE ENDS IN NARROW MEDIAN

DESIGN "D"IS LIMITED FOR USE WHERE THE GRASSED MEDIAN AT BRIDGE APPROACHES IS ALMOST FLUSH (SLOPES NOT STEEPER THAN 20:1) AND MEDIAN IS LESS THAN 38 FT. IN WIDTH FOR OTHER CONDITIONS. SEE STD. 4387 OR CONSTRUCTION DETAILS.

**PROJECTION FROM FACE OF GUARDRAIL AT BRIDGE END

"G"=DISTANCE FROM ** TO WITHIN 2' OF MEDIAN ℄

MIN "L" = "G"(a/b)-25'

FOR MINIMUM FLARE a/b SEE CHART AT TOP.

⊗FOR WIDER MEDIANS, SEE STD.4051

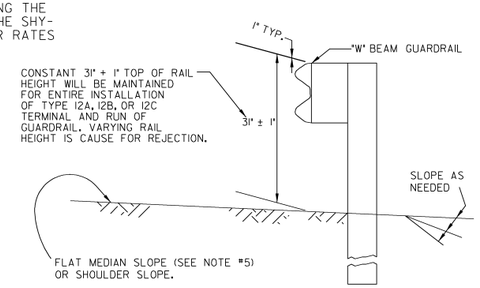

SECTION A-A

(SHOWN FOR "W"BEAM GUARDRAIL)

DEPARTMENT OF TRANSPORTATION
STATE OF GEORGIA

STANDARD
GUARDRAIL LOCATIONS IN MEDIANS
GUARDRAIL LOCATIONS AT TURNOUTS
31 INCH GUARDRAIL HEIGHT

SCALE: AS SHOWN AUGUST 2011

BY	REVISION	DATE
FBF	REV TPI2 TO I2A/B/C TRML	1-29-16

DES. G.L.O. (SUBMITTED) STATE DESIGN POLICY ENGINEER
DRW. G.L.O.
CHK. B.R.E.
REVIEW B.A.S. (APPROVED) Margaret B Pitsele CHIEF ENGINEER

NUMBER 4386

STATE	PROJECT NUMBER	SHEET NO.	TOTAL SHEETS
GA.			

GUARDRAIL LOCATION AT BRIDGE ENDS

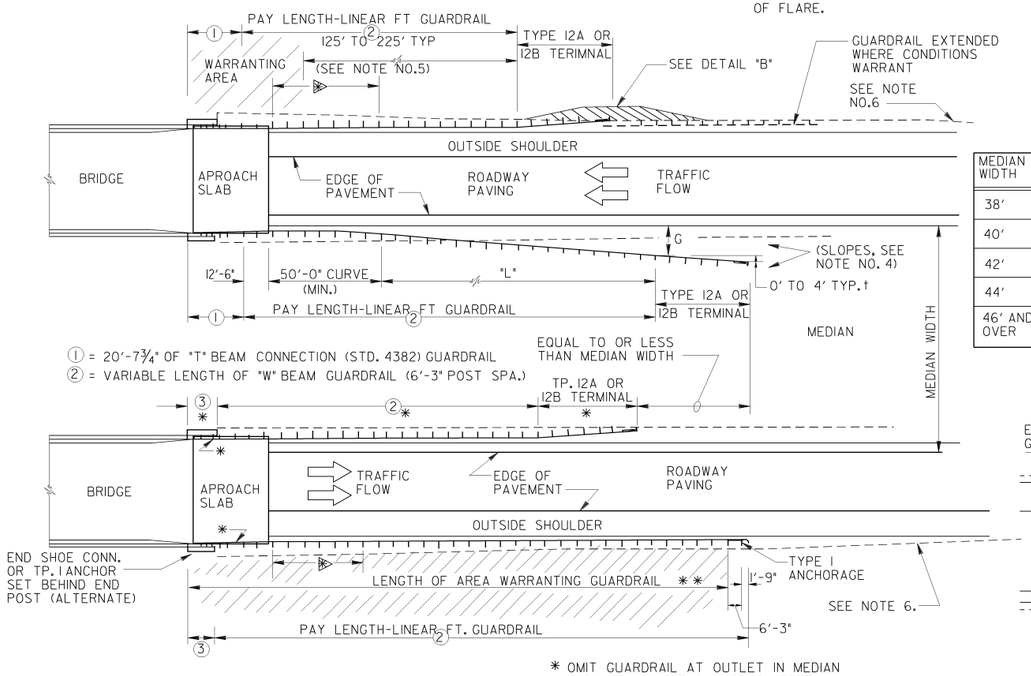

* OMIT GUARDRAIL AT OUTLET IN MEDIAN FOR MEDIAN WIDTHS OVER 54 FEET.

** OMIT GUARDRAIL AT OUTLET ON THE OUTSIDE UNLESS ROADSIDE CONDITIONS WARRANT ITS USE.

30 20 10 0 30FT.
SCALE

③ = 8'-1¾" OF T BEAM (END SHOE & TRANSITION SECTION) - OR TYPE I ANCHOR, SET BEHIND END POST & CONNECTED TO W - BEAM.

WHERE THE OUTSIDE SHOULDER WIDTH IS REDUCED ACROSS BRIDGE:

a) SHORT INSTALATION (LESS THAN 200' TOTAL) OF GUARDRAIL SHALL HAVE STRAIGHT ALIGNMENT;

b) LONGER INSTALLATION SHALL BE TRANSITIONED, STARTING 33' TYP. FROM BRIDGE END, TO THE "S" OFFSET PER FLARE DETAIL.

GUARDRAIL LOCATION ALONG ROADWAY

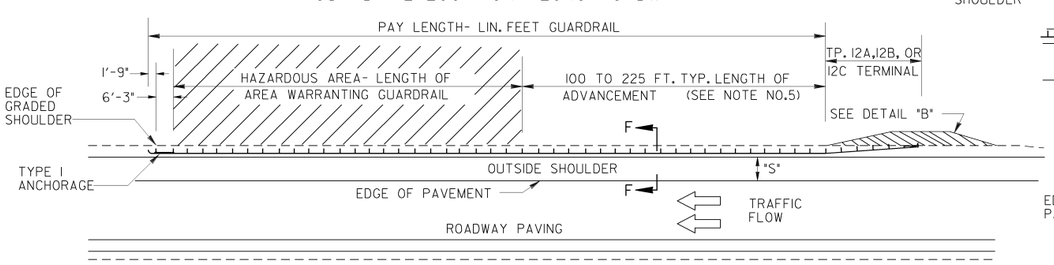

30 20 10 0 30FT.
SCALE

"S"= WIDTH OF USABLE SHOULDER PLUS 2 FT. (SEE GEN. NOTE NO. 8).

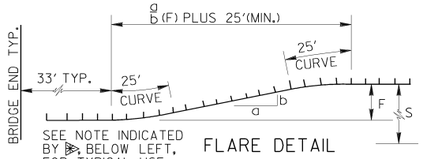

SEE NOTE INDICATED BY ⋙ BELOW LEFT, FOR TYPICAL USE OF FLARE.

FLARE DETAIL

FLARE RATE			
DESIGN SPEED (mph)	SHY-LINE OFFSET (ft)	(a/b) BARRIER INSIDE SHY-LINE	(a/b) BARRIER AT OR BEYOND SHY-LINE
70	9	30	15
60	8	26	14
55	7	24	12
50	6.5	21	11
45	6	18	10
40	5	16	8
30	4	13	7

WHERE S OR (S-F) IS LESS THAN THE SHY-LINE OFFSET, USE FLATTER RATES GIVEN IN TABLE.

MEDIAN WIDTH	G	MIN. L
38'	8'	200'
40'	10'	175'
42'	12'	150'
44'	14'	137.5'
46' AND OVER	16'	125'

NOTE:

FOR DETAILS OF GUARDRAIL PROTECTION OF FIXED OBJECTS IN THE MEDIAN, SEE STANDARD #4389. FOR DETAILS OF CONCRETE BARRIERS, SEE STANDARDS 4940, 4948, OR OTHER APPLICABLE DETAILS.

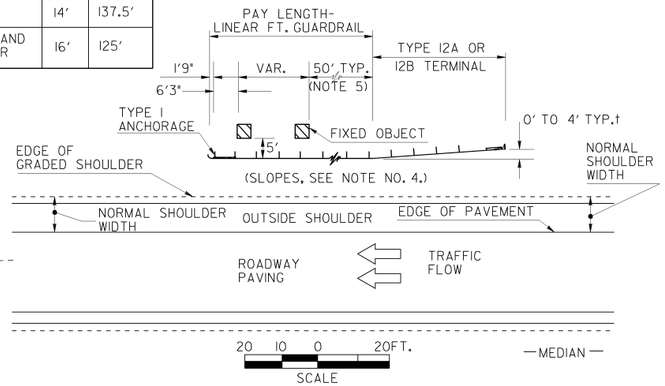

NOTE: DETAIL ABOVE APPLIES WHERE OBJECT FALLS WITHIN THE CLEAR ZONE WIDTH AND SLOPES IN FRONT OF THE OBJECT ALLOW GUARDRAIL INSTALLATION BACK OF THE GRADED SHOULDER. SEE GENERAL NOTE NO. 4.

GUARDRAIL LOCATION IN FRONT OF FIXED HAZARDS

(FOR USE WHERE FIXED OBJECTS ALONG THE OUTSIDE OF THE ROADWAY ARE WITHIN THE CLEAR ZONE WIDTH AND CONCRETE SIDE BARRIER IS NOT USED)

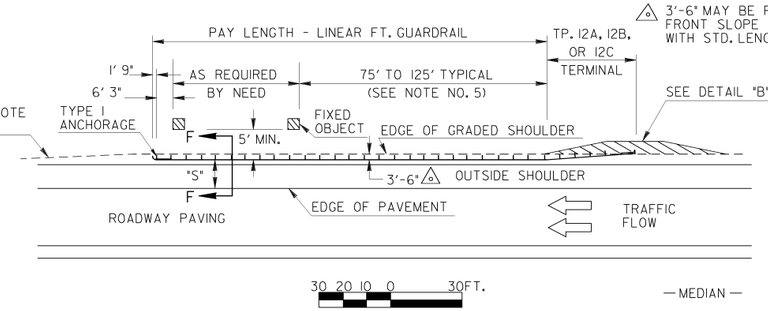

△6 3'-6" MAY BE REDUCED TO 2'-6" FOR FRONT SLOPE OF 4:1 OR FLATTER WITH STD. LENGTH 6'-0" POST.

THIS DETAIL IS FOR USE WHERE FIXED OBJECTS REQUIRE GUARDRAIL AND SLOPES ARE NOT FLAT ENOUGH TO PERMIT GUARDRAIL ERECTION BACK OF GRADED SHOULDER, AS IN DETAIL BELOW.

"S"= WIDTH OF USABLE SHOULDER PLUS 2FT. (SEE GEN. NOTE NO. 8).

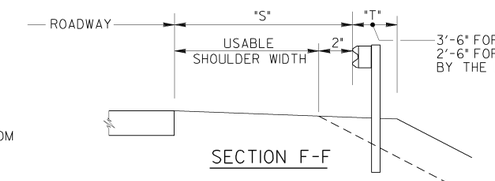

3'-6" FOR NORMAL LENGTH POST MAY BE REDUCED TO 2'-6" FOR ADDITIONAL LENGTH(7'-0")POST, AS DIRECTED BY THE ENGINEER.

SECTION F-F

DETAIL "B"

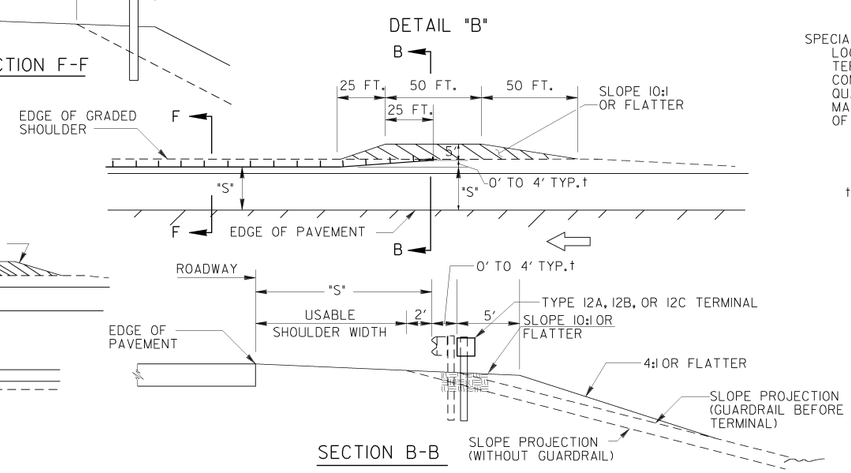

SECTION B-B

GENERAL NOTES:

1. SPECIFICATIONS: GEORGIA STANDARD, CURRENT EDITION, & SUPPLEMENTS THERETO.
2. POST SPACINGS SHALL BE 6'-3" C. TO C. EXCEPT WHERE REDUCED SPACINGS ARE SPECIFIED AT BRIDGE ENDS OR AT FIXED HAZARDS.
3. FOR DETAILS OF GUARDRAIL, ACCESSORIES, POSTS, OFFSET BLOCKS, ANCHORAGES, TERMINALS, ETC., SEE APPLICABLE STANDARD AND/OR CONSTRUCTION DETAILS.
4. NEGATIVE SLOPES IN FRONT OF GUARDRAIL AND TYPE 12A, 12B, AND 12C TERMINALS SHALL BE 10:1 OR FLATTER.
5. GUARDRAIL SHALL BEGIN IN ADVANCE OF A HAZARD OR HAZARDOUS AREA BY A SUFFICIENT LENGTH TO PREVENT VEHICLE PENETRATION BEHIND THE RAIL INTO PROTECTED AREA. THE TYPICAL LENGTHS OF ADVANCEMENT SHOWN MAY BE INCREASED OR DECREASED WHEN SHOWN IN THE PLANS, OR WHERE DIRECTED BY THE ENGINEER BECAUSE OF SPEED DESIGN, ROADSIDE GEOMETRICS, GRADES, SIZE OF HAZARD, OR OTHER CONDITIONS; IF FURTHER INFORMATION IS DESIRED, SEE AASHTO "ROADSIDE DESIGN GUIDE."
6. WHERE GUARDRAIL IS REQUIRED ON THE SHOULDER, THE SHOULDER WILL BE GRADED WIDER AS SHOWN IN DETAIL "B".
7. GAPS OF LESS THAN 200 FT. BETWEEN GUARDRAIL INSTALLATIONS SHOULD BE AVOIDED EXCEPT WHERE JUSTIFIED BY LOCAL CONDITIONS.
8. "S" IS THE OFFSET TO FACE OF GUARDRAIL. THIS WILL BE TWO FT. GREATER THAN THE NORMAL USABLE SHOULDER WIDTH(WITHOUT GUARDRAIL). HOWEVER, IF THE NORMAL GRADED SHOULDER WIDTH(WITHOUT GUARDRAIL) IS GREATER THAN REQUIRED BY AASHTO, "S" DISTANCE MAY BE ESTABLISHED AS TWO(2) FT. GREATER THAN THE AASHTO SHOULDER WIDTH.
9. OFFSET FROM RAIL FACE TO HAZARD FACE SHALL BE 5'+/- DESIRABLE AND 4'-3" MINIMUM. THIS OFFSET MAY BE REDUCED TO 3'-0" MIN. BY USING 3'- 1½" POST SPACINGS IN FRONT OF HAZARD WITH A MINIMUM OF 7 SUCH SPACINGS IN ADVANCE OF HAZARD.

SPECIAL NOTE:

LOCATION AND QUANTITIES GIVEN IN THE PLANS FOR GUARDRAIL, TERMINALS, AND ANCHORAGES ARE ESTIMATES MADE FROM OFFICE COMPUTATIONS. A FINAL DETERMINATION AS TO LOCATIONS AND QUANTITIES OF GUARDRAIL, TERMINALS, AND ANCHORAGES WILL BE MADE BY THE ENGINEER OR A REPRESENTATIVE FROM THE OFFICE OF TRAFFIC AND SAFETY AFTER CONSTRUCTION OF ROADWAY.

† SEE GA STANDARD 4384 FOR OFFSETS AND FLARE RATES FOR TYPE 12A, 12B, AND 12C TERMINALS.

BY	REVISION	DATE
FBF	REV TP 12 TO TP 12A/B/C; NOTES & FLARE RATE TBL	1-29-16

DEPARTMENT OF TRANSPORTATION
STATE OF GEORGIA

STANDARD
GUARDRAIL LOCATION DETAILS FOR MULTI-LANE DIVIDED HIGHWAYS (WITH SHOULDERS ADJACENT TO ROADWAY) 31 INCH GUARDRAIL HEIGHT

SCALE: AS SHOWN AUGUST 2011

DES. G.L.O. (SUBMITTED)
DRW. G.L.O.
CHK. B.R.E.
REVIEW B.A.S.
(APPROVED) Margaret B Pinkle
STATE DESIGN POLICY ENGINEER
CHIEF ENGINEER

NUMBER 4387

STATE	PROJECT NUMBER	SHEET NO.	TOTAL SHEETS
GA.			

NOTE:
FOR MINIMAL REDUCTION (TO 2') OF SHOULDER ACROSS BRIDGE, ALIGNMENT SHALL BE STRAIGHT FOR SHORT INSTALLATIONS (LESS THAN 200' TOTAL) AS SHOWN HEREON. FOR LONGER INSTALLATIONS, OR GREATER REDUCTION OF SHOULDER WIDTH, GUARDRAIL INSTALLATION SHALL BE AS PER DETAIL AT BOTTOM MIDDLE.

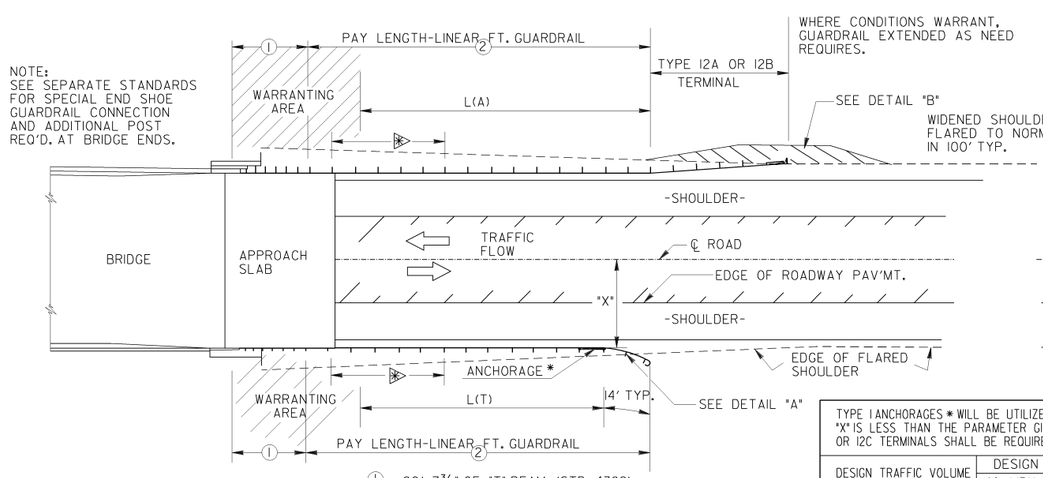

TRAFFIC VOLUME	MIN. L(T)	MIN. L(A)
DHV OVER 400	100'-0"	137'-6"
DHV 200-400	87'-6"	125'-0"
DHV 100-200	75'-0"	112'-6"
ADT 400 & OVER	62'-6"	100'-0"
ADT UNDER 400	50'-0"	87'-6"

NOTE: THESE MINIMUM LENGTHS ARE FOR STRAIGHT ALIGNMENTS IN ADVANCE OF WARRANTING AREA.

① = 20'-7¾" OF "T" BEAM (STD. 4382)
② = VARIABLE LENGTH OF "W" BEAM (6'-3" POST SPA.)

GUARDRAIL LOCATION AT BRIDGE ENDS

20' 10' 0 20'
SCALE

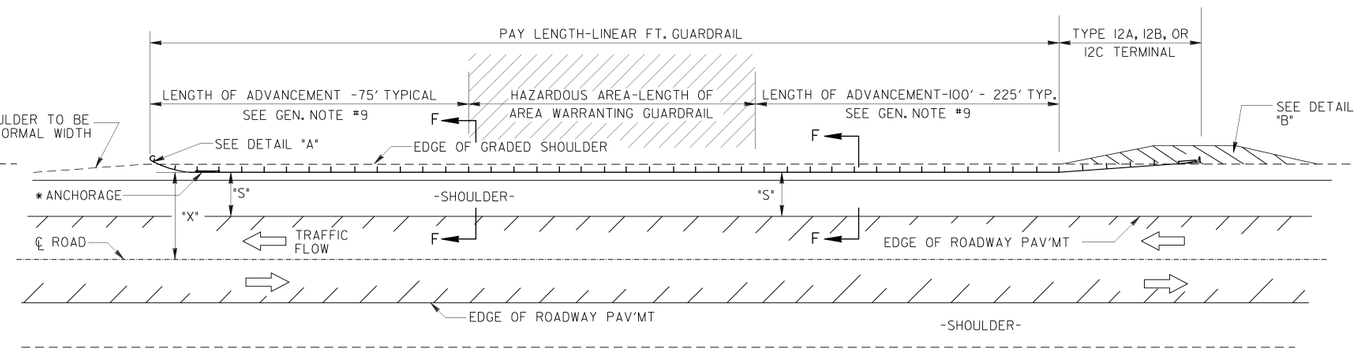

NOTE:
GUARDRAIL TO BE LOCATED ON BOTH SIDES OF ROAD IF CONDITIONS WARRANT.

GUARDRAIL LOCATION ALONG ROADWAY

20' 10' 0 20'
SCALE

TYPE I ANCHORAGES * WILL BE UTILIZED AT THE TRAILING END, UNLESS THE DISTANCE "X" IS LESS THAN THE PARAMETER GIVEN IN THIS TABLE IN WHICH CASE TYPE 12A, 12B, OR 12C TERMINALS SHALL BE REQUIRED.

DESIGN TRAFFIC VOLUME	DESIGN SPEEDS (AS SHOWN ON COVER SHEET)				
	40 MPH	50 MPH	55 MPH	60 MPH	70 MPH
OVER 6000 A.D.T.	14'	20'	22'	30'	30'
1500 - 6000 A.D.T.	12'	16'	20'	26'	28'
750 - 1500 A.D.T.	10'	14'	16'	20'	24'
UNDER 750 A.D.T.	7'	10'	12'	16'	20'

"S" IS THE OFFSET TO THE FACE OF THE GUARDRAIL; THIS WILL BE TWO(2) FEET GREATER THAN THE USABLE SHOULDER WIDTH (PER AASHTO MINIMUM SHOULDER REQUIREMENTS) EXCEPT WHERE THE CURRENT A.D.T. IS UNDER 400, IN WHICH CASE "S" MAY BE EQUAL TO THE USABLE OR GRADED SHOULDER WIDTH (NOT LESS THAN 4).

GENERAL NOTES:

1. GUARDRAIL, ITS FITTINGS, PARTS, ETC. ARE TO BE IN ACCORDANCE WITH GEORGIA STANDARD SPECIFICATIONS AND/OR SPECIAL PROVISIONS.
2. FOR DETAILS OF BEAM TYPE GUARDRAIL, ACCESSORIES, GUARDRAIL POST, OFFSET BLOCKS, GUARDRAIL ANCHORAGE TYPE I, TERMINALS TYPE 12A, 12B, AND 12C, & BRIDGE END CONNECTION DETAILS, SEE APPLICABLE GEORGIA STANDARD PLANS AND/OR CONSTRUCTION DETAILS.
3. ALL OFFSET AND LENGTHS HERE SHOWN ARE APPLIED TO FACE OF GUARDRAIL.
4. POST SPACING SHALL BE 6'3" C. TO C., UNLESS OTHERWISE NOTED.
5. TYPE 12A, 12B, AND 12C TERMINALS SHOULD BE TERMINATED ON SLOPES 10:1 OR FLATTER. WHERE NORMAL SLOPE IS STEEPER, A 10:1 OR FLATTER SLOPE SHOULD BE CONSTRUCTED.
6. GUARDRAIL SHALL NOT BE ERECTED ON SLOPES WHICH ARE STEEPER THAN 10:1, EXCEPT FOR THE PORTION OF PRECURVED (SHOP CURVED) SECTION THAT EXTENDS BACK OF THE SHOULDER AS SHOWN IN DETAIL "A" WHICH IS ERECTED ON NORMAL SLOPES OR EXCEPT WHERE SHOWN OTHERWISE IN PLANS.
7. PAY LENGTH SHALL BE MEASURED ALONG FACE OF GUARDRAIL.
8. W. BEAM GUARDRAIL WILL HAVE A CONSTANT TOP OF RAIL HT. OF 31" THROUGHOUT INSTALLATION EXCEPT WHERE A PORTION OF THE PRECURVED SECTION SHOWN IN DETAIL "A" EXTENDS BACK OF THE GRADED SHOULDER.
9. GUARDRAIL WILL EXTEND PAST HAZARD ON BOTH THE APPROACH & TRAILING ENDS TO PREVENT VECHICLE PENETRATION BEHIND THE RAIL INTO THE HAZARDOUS AREA. THE TYPICAL LENGTHS OF ADVANCEMENT SHOWN MAY BE INCREASED OR DECREASED WHEN SHOWN IN THE PLANS, OR WHERE DIRECTED BY THE ENGINEER BECAUSE OF SPEED DESIGN, ROADSIDE GEOMETRY, SIZE OF HAZARD, OR OTHER CONDITIONS. IF FURTHER INFORMATION IS DESIRED; SEE THE AASHTO "ROADSIDE DESIGN GUIDE".

SPECIAL NOTE:
LOCATION AND QUANTITIES GIVEN IN THE PLANS FOR GUARDRAIL, TERMINALS, AND ANCHORAGES ARE ESTIMATES MADE FROM OFFICE COMPUTATIONS. A FINAL DETERMINATION AS TO LOCATIONS AND QUANTITIES OF GUARDRAIL, TERMINALS, AND ANCHORAGES WILL BE MADE BY THE ENGINEER OR A REPRESENTATIVE FROM THE OFFICE OF TRAFFIC OPERATIONS AFTER CONSTRUCTION OF ROADWAY.

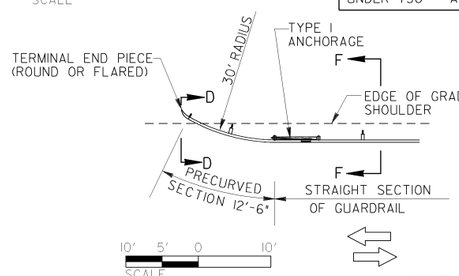

DETAIL "A"

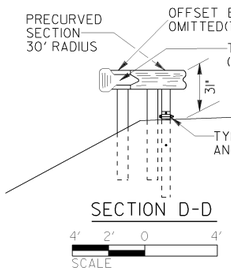

SECTION D-D

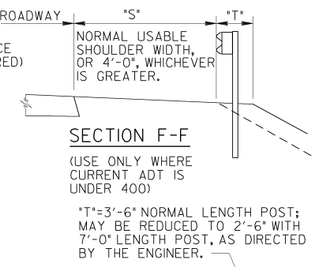

SECTION F-F

(USE ONLY WHERE CURRENT ADT IS UNDER 400)

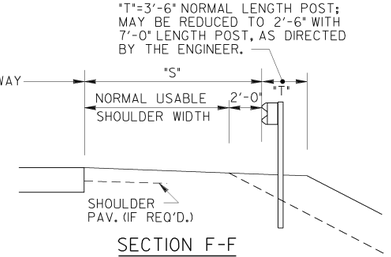

"T"=3'-6" NORMAL LENGTH POST; MAY BE REDUCED TO 2'-6" WITH 7'-0" LENGTH POST, AS DIRECTED BY THE ENGINEER.

SECTION F-F

(USE FOR ALL CONDITIONS, EXCEPT WHERE CURRENT ADT IS UNDER 400.)

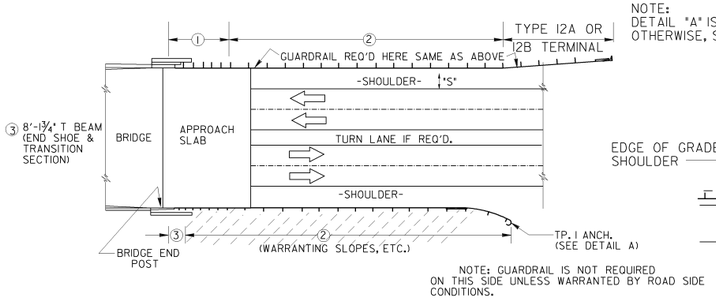

NOTE: GUARDRAIL IS NOT REQUIRED ON THIS SIDE UNLESS WARRANTED BY ROAD SIDE CONDITIONS.

GUARDRAIL AT BRIDGE END OF MULTI-LANE UNDIVIDED HIGHWAY

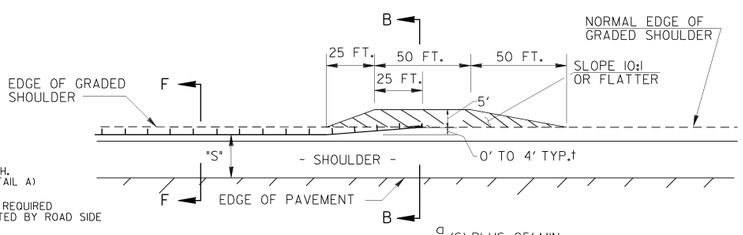

NO SCALE

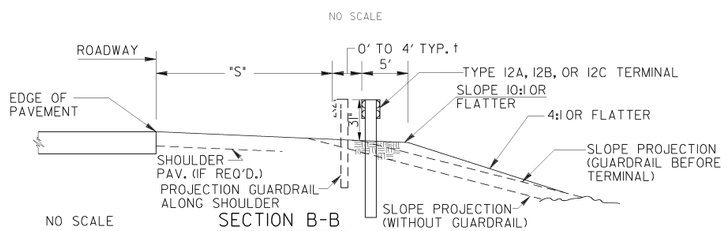

NO SCALE

SECTION B-B

DETAIL "B"

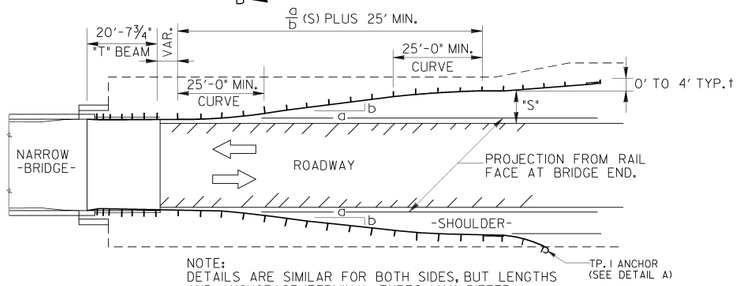

NOTE:
DETAILS ARE SIMILAR FOR BOTH SIDES, BUT LENGTHS AND ANCHORAGE/TERMINAL TYPES MAY DIFFER.

GUARDRAIL LOCATION AT END OF NARROW BRIDGE

(NOTE: DETAILS NOT SHOWN HERE ARE SIMILAR TO THOSE AT TOP LEFT.)

NOTE:
DETAIL "A" IS FOR USE ONLY WHERE TYPE I ANCHORAGES ARE PERMITTED AS SHOWN ABOVE OTHERWISE, SEE DETAIL "B" FOR PROPER INSTALLATION OF TYPE 12A, 12B, OR 12C TERMINAL.

FLARE RATE			
DESIGN SPEED (mph)	SHY-LINE OFFSET (ft)	(a/b)	
		BARRIER INSIDE SHY-LINE	BARRIER AT OR BEYOND SHY-LINE
70	9	30	15
60	8	26	14
55	7	24	12
50	6.5	21	11
45	6	18	10
40	5	16	8
30	4	13	7

IF THE OFFSET FROM THE EDGE OF THE TRAVEL LANE TO THE FACE OF THE GUARDRAIL AT ANY POINT ALONG THE INSTALLATION IS LESS THAN THE SHY-LINE OFFSET, USE THE FLATTER RATES GIVEN IN THE TABLE.

† SEE GA STANDARD 4384 FOR OFFSETS AND FLARE RATES FOR TYPE 12A, 12B, AND 12C TERMINALS.

DATE	REVISION
1-29-16	REV TP 12 TO 12A/B/C; REV NOTES, AND FLARE TBL

BY: FBF

DEPARTMENT OF TRANSPORTATION
STATE OF GEORGIA

STANDARD
GUARDRAIL LOCATION DETAILS FOR UNDIVIDED HIGHWAYS AND ROADS (WITH SHOULDERS ADJACENT TO THE ROADWAY) 31 INCH GUARDRAIL HEIGHT

SCALE AS SHOWN — AUGUST 2011

DES. G.L.O.
DRW. G.L.O.
CHK. B.R.E.
REVIEW B.A.S.

(SUBMITTED) STATE DESIGN POLICY ENGINEER
(APPROVED) Margaret B Pinkelo CHIEF ENGINEER

NUMBER 4388

STATE	PROJECT NUMBER	SHEET NO.	TOTAL SHEETS
GA.			

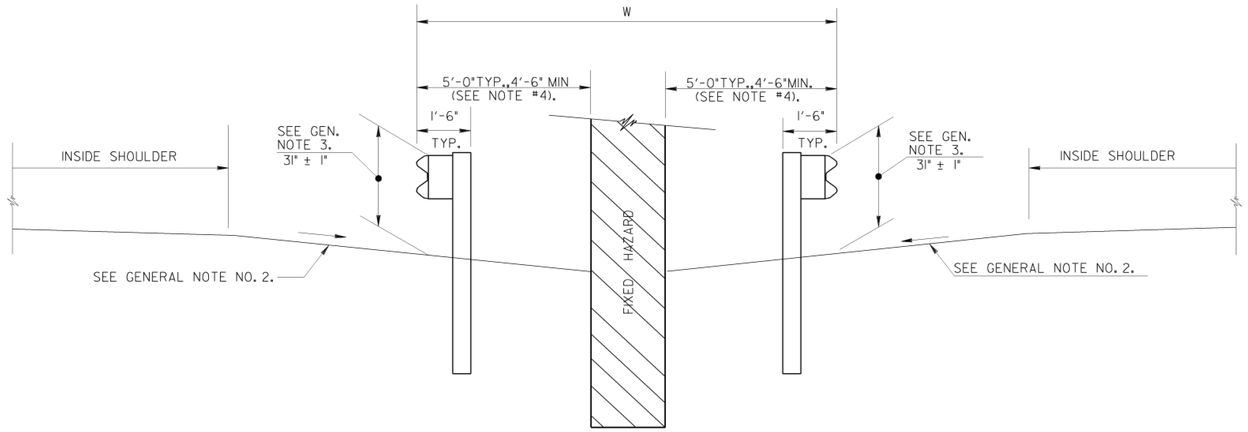

SECTION A-A

(NO SCALE)

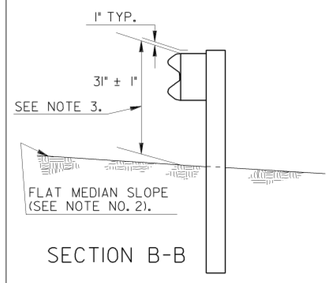

SECTION B-B

NOTE:
SECTION B-B IS APPLICABLE FOR ENTIRE INSTALLATION.

TABLE A	
W	L
12'-0"	14'-0"
13'-0"	16'-0"
14'-0"	18'-0"
15'-0"	20'-0"

DO NOT USE THIS STANDARD FOR GORE AREAS.

TABLE B			
DESIGN SPEED (mph)	SHY-LINE OFFSET FT	MAX.FLARE RATE (a/b)	
		BARRIER INSIDE SHY-LINE	BARRIER AT OR BEYOND SHY-LINE
70	9	30	15
60	8	26	14
55	7	24	12
50	6.5	21	11
45	6	18	10
40	5	16	8
30	4	13	7

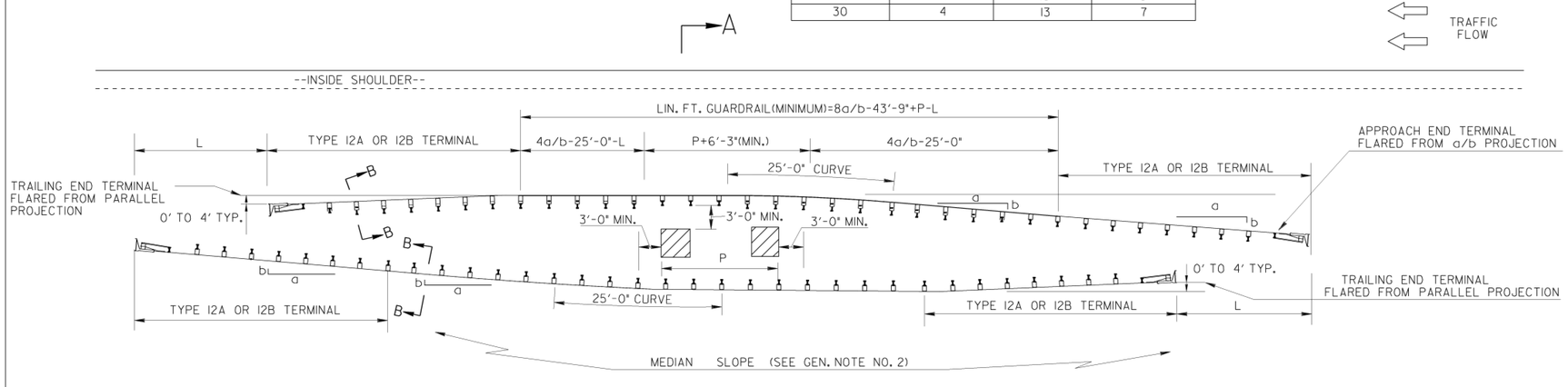

PLAN VIEW

GENERAL NOTES:

1. SPECIFICATIONS: GEORGIA STANDARD, CURRENT EDITION, AND SUPPLEMENTS THERETO.
2. ALL MEDIAN SLOPES SHALL BE 10:1, OR FLATTER, FOR THE ENTIRE INSTALLATION AND FOR AT LEAST 50 FT. IN ADVANCE ON BOTH SIDES.
3. THE HEIGHT OF "W"-BEAM RAIL TOP SHALL BE 31" ± 1", AS MEASURED TO THE GROUND LINE BELOW THE FACE OF RAIL AT ALL POINTS.
4. WHERE AN OFFSET OF AT LEAST 4'-6" CANNOT BE OBTAINED FROM RAIL FACE TO OBJECT FACE, DOUBLE POST SPACING(3'-1½" o.c.) IN FRONT OF OBJECT PLUS A MINIMUM OF SEVEN SUCH SPACINGS IN ADVANCE OF OBJECT IS REQUIRED WITH A 3 FOOT (MIN.) OFFSET FROM RAIL FACE TO OBJECT FACE.

USER'S GUIDE:

a) DETERMINE VALUE FOR 'W' FROM DEPTH OF OBJECT AND OFFSETS, THEN SELECT 'L' VALUE FROM TABLE A AT LEFT.

b) FIND a/b FROM TABLE B AT LEFT.

c) ESTABLISH "P"(OUTSIDE TO OUTSIDE OF OBJECT) AND ROUND TO MULTIPLE OF 6'-3" OR 12'-6".

d) MINIMUM LINEAR FEET OF GUARDRAIL IS THEN EQUAL TO: (16)(a/b)-87'-6"+2P-2L.

ALSO: FOUR TYPE 12A OR 12B TERMINALS IN ADDITION TO THE ABOVE.

SPECIAL NOTE:

STANDARD NO. 4389 IS APPLICABLE AT FIXED OBJECTS WHERE DOUBLE FACED GUARDRAIL IS NOT REQUIRED AND MEDIAN SLOPES ARE 10:1 OR FLATTER. DO NOT USE IN GORES.

BY	REVISION	DATE
	REV. TABLE B	
	REV TP 12 TO TP 12A/B	
FBF	REV. DIM. TO REFLECT 8" BLK	1-29-16

DEPARTMENT OF TRANSPORTATION
STATE OF GEORGIA

STANDARD

GUARDRAIL LOCATION AT FIXED OBJECTS IN MEDIAN 31 INCH GUARDRAIL HEIGHT

SCALE AS SHOWN — AUGUST 2011

DES. G.L.O. (SUBMITTED) STATE DESIGN POLICY ENGINEER
DRW. G.L.O.
CHK. B.R.E. (APPROVED) Margaret B Pinkelo CHIEF ENGINEER
REVIEW B.A.S.

NUMBER 4389

STATE	PROJECT NUMBER	SHEET NO.	TOTAL SHEETS
GA.			

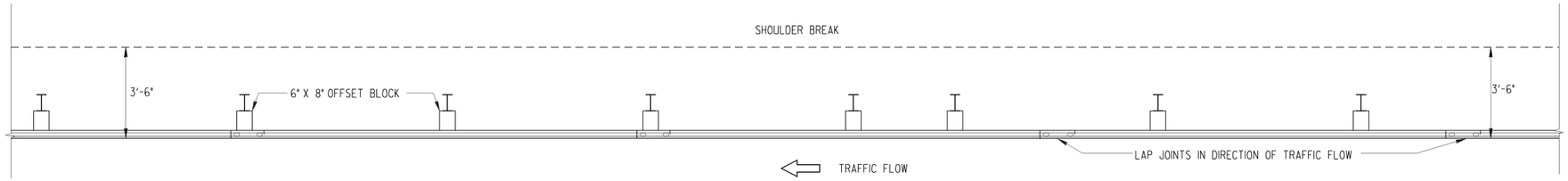

PLAN

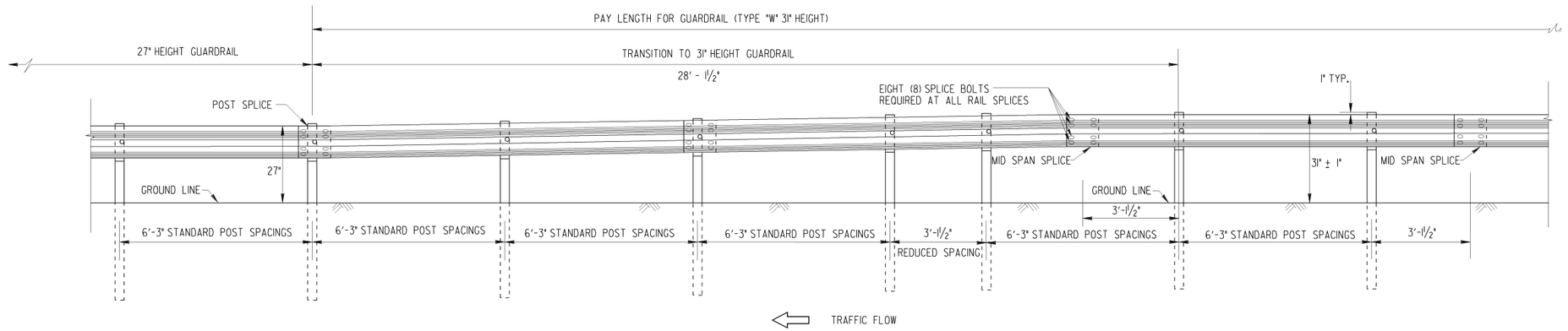

ELEVATION

(TYPICAL VIEW ALONG ROADWAY)

GENERAL NOTES:

1. SPECIFICATIONS: GEORGIA STANDARD CURRENT EDITION, AND SUPPLEMENTS THERETO.

2. NUTS, BOLTS, WASHERS, RAIL, TERMINAL SECTIONS, END SHOES, BACK-UP PLATES, END SECTIONS AND OTHER GUARDRAIL HARDWARE ARE IN ACCORDANCE WITH THE CURRENT ARTBA TECHNICAL BULLETIN NO. 268 -- UNLESS SPECIFIED OTHERWISE. DIMENSIONS FOR POSTS AND OFFSET BLOCKS WILL BE ACCORDING TO GA. STANDARD 438I.

3. FOR DETAILS OF GUARDRAIL ANCHORAGES AND TERMINALS, SEE APPLICABLE STANDARDS AND/OR CONSTRUCTION DETAILS.

4. FOR LOCATION OF GUARDRAIL SEE APPLICABLE LOCATION STANDARDS.

5. ALL STEEL HARDWARE COMPONENTS WILL BE GALVANIZED AFTER FABRICATION. GALVANIZING REPAIR COMPOUND (SEC. 645) WILL BE FIELD APPLIED TO ANY COATINGS DAMAGED.

6. WHEN GUARDRAIL IS REQUIRED ON CURVES WITH RADII LESS THAN 150', PRECURVED RAIL WILL BE REQUIRED.

7. PAYMENT FOR GUARDRAIL (Type "W") TO INCLUDE OFFSET BLOCKS, POST, BACK-UP PLATES WHERE REQUIRED, BOLTS, NUTS, WASHERS, TERMINAL SECTIONS, ADDITIONAL POST WHERE REQUIRED, & REMOVAL AND REPLACEMENT OF PORTIONS OF MEDIAN PAVING, SPILLWAYS, OR CATCH BASINS WHERE NECESSARY.

8. ALL DIMENSIONS ARE SUBJECT TO MANUFACTURING TOLERANCES.

9. STANDARD NET LENGTH OF RAIL ELEMENTS MAY BE EITHER 12'-6" OR 25'-0". THESE LENGTHS SHALL BE ARRANGED TO PROVIDE AS NEARLY AS POSSIBLE THE REQUIRED LENGTH FOR EACH INSTALLATION.

BY	REVISION	DATE
FBF	REV. 31" W-BM BLOCK TO 6"X8"	1-29-16

DEPARTMENT OF TRANSPORTATION
STATE OF GEORGIA

STANDARD

"W" BEAM GUARDRAIL TRANSITION 27 INCH GUARDRAIL TO 31 INCH GUARDRAIL HEIGHT

NO SCALE AUGUST 2011

DES. G.L.O. (SUBMITTED) STATE DESIGN POLICY ENGINEER
DRW. G.L.O.
CHK. B.R.E.
REVIEW B.A.S. (APPROVED) CHIEF ENGINEER

NUMBER 4390

GDOT Georgia Department of Transportation | P. I. No.

GUARDRAIL LOCATION AT BRIDGE WITH SIDEWALK

(6.5 FT. SIDEWALK ACROSS BRIDGE MINIMUM)

α WHERE GUARDRAIL IS WARRANTED AT TRAILING END OF BRIDGE, POSTS FLAGGED WITH α ARE OMITTED. SEE GEN NOTE #4

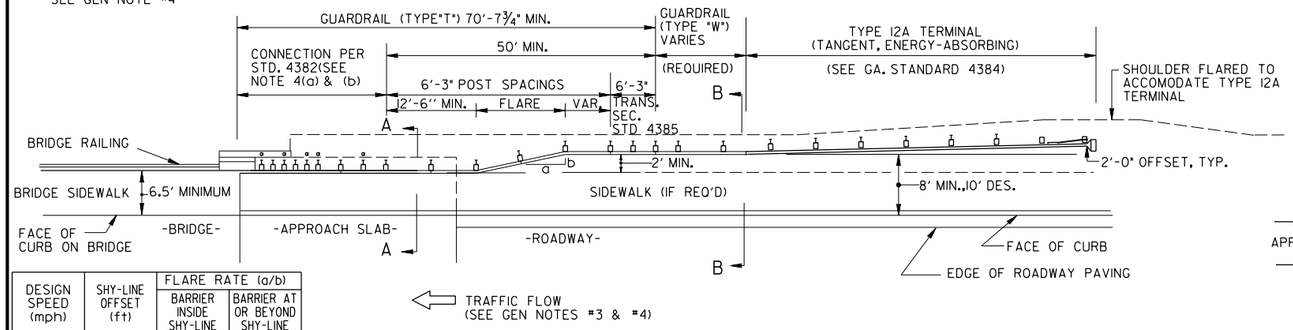

DESIGN SPEED (mph)	SHY-LINE OFFSET (ft)	FLARE RATE (a/b)	
		BARRIER INSIDE SHY-LINE	BARRIER AT OR BEYOND SHY-LINE
70	9	30	15
60	8	26	14
55	7	24	12
50	6.5	21	11
45	6	18	10
40	5	16	8
30	4	13	7

IF THE OFFSET FROM THE EDGE OF THE TRAVEL LANE TO THE FACE OF THE GUARDRAIL AT ANY POINT ALONG THE INSTALLATION IS LESS THAN THE SHY-LINE OFFSET, USE THE FLATTER RATES GIVEN IN THE TABLE.

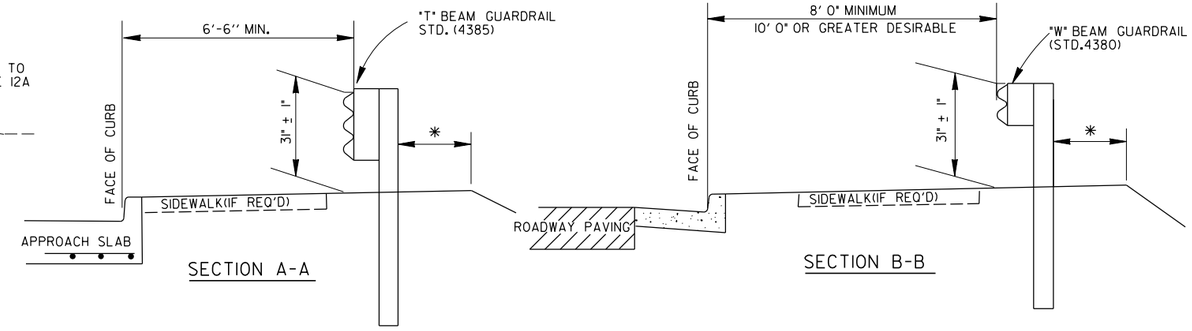

* DISTANCE FROM BACK OF POST TO EDGE OF GRADED SHOULDER SHALL NOT BE LESS THAN 2 FEET WITH NORMAL LENGTH POST AND NOT LESS THAN 1 FOOT WITH ADDITIONAL LENGTH POST. (STD. 4381)

GUARDRAIL LOCATION AT BRIDGE WITH NARROW WALK

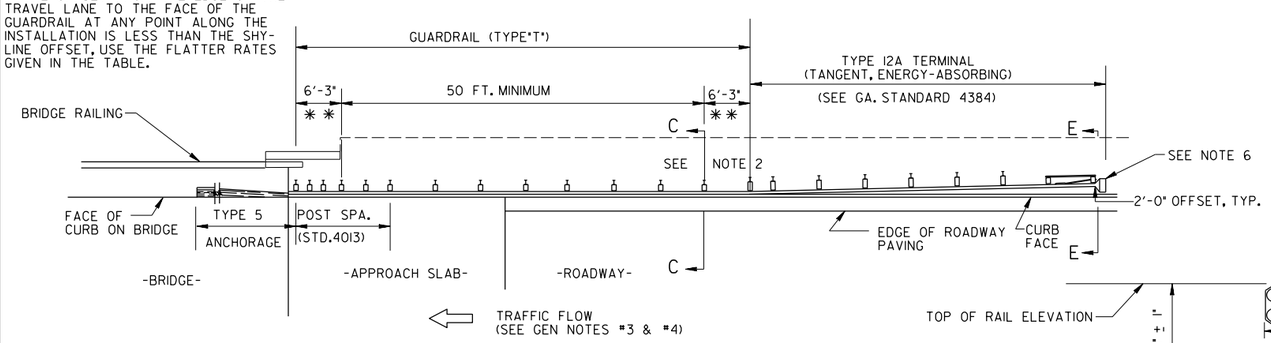

** SEE STD. 4385 FOR TRANSITION PIECE BETWEEN "T"-BEAM AND ANCHORAGES, WHERE REQUIRED.

GUARDRAIL LOCATION SHOULDER ACROSS BRIDGE

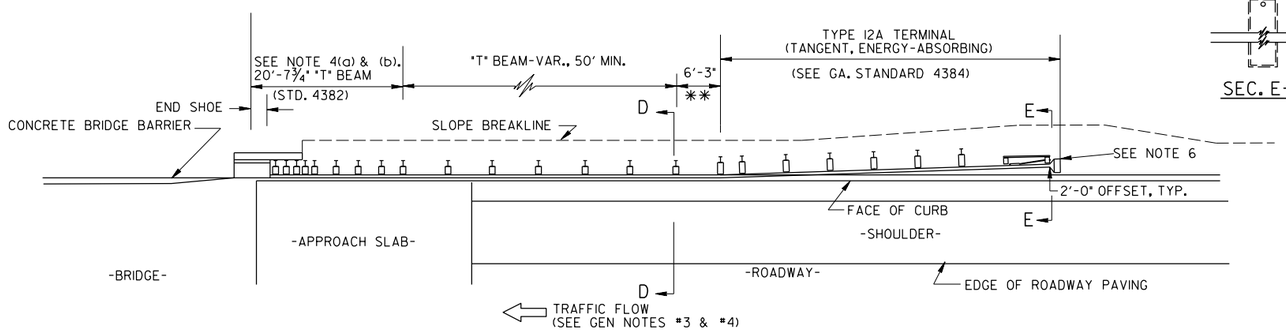

GUARDRAIL LOCATION BACK OF CURB

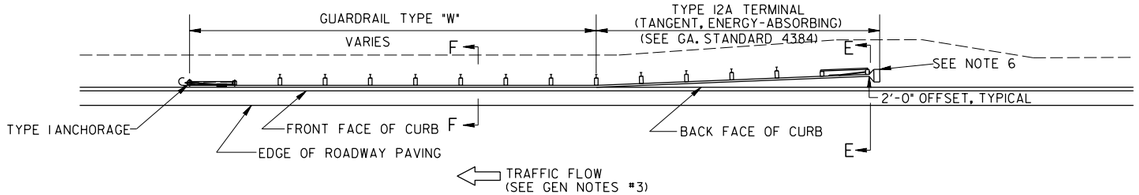

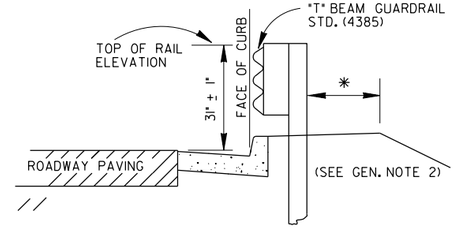

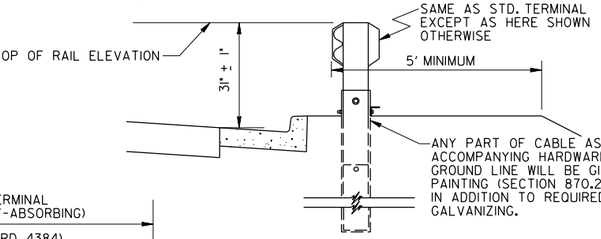

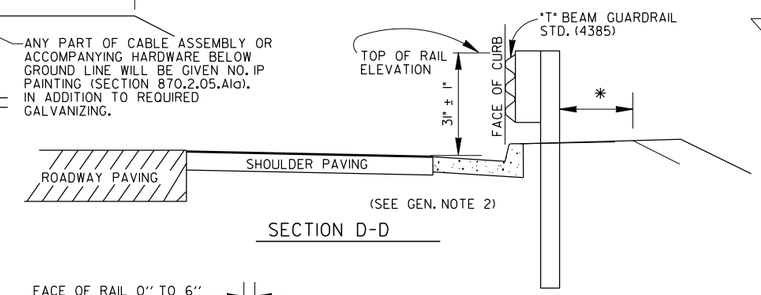

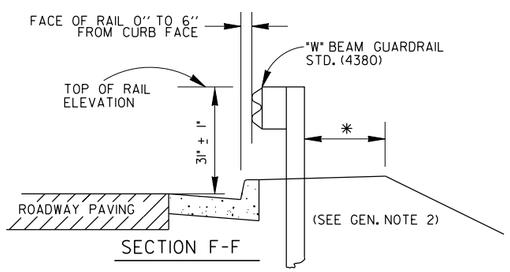

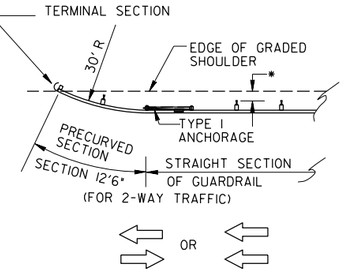

GENERAL NOTES:

1. SPECIFICATIONS: GEORGIA STANDARD, CURRENT EDITION, AND SUPPLEMENTS THERETO.
2. IF GUARDRAIL IS DIRECTLY ABOVE CURB, DO NOT USE STD. 1033D, 1033G, 1034D, 1034G CATCH BASINS AT SAME LOCATION. EITHER USE OTHER DRAINAGE STRUCTURES OR ADJUST LOCATION OF CATCH BASINS TO MISS GUARDRAIL.
3. (a) TYPE 12A, 12B, OR 12C TERMINALS ARE REQUIRED AT ALL APPROACH ENDS OF GUARDRAIL AND AT TRAILING ENDS THAT FALL WITHIN THE C.Z.W. OF THE TWO-WAY TRAFFIC. C.Z.W.=CLEAR ZONE WIDTH.
   (b) TYPE I ANCHORAGE WITH A 30' R PRECURVED RAIL SECTION MAY BE USED AT TRAILING ENDS THAT FALL OUTSIDE THE C.Z.W. OF THE TWO-WAY TRAFFIC.
   (c) TYPE I ANCHORAGES ARE USED AT THE TRAILING ENDS OF ONE-WAY TRAFFIC.
4. (a) GUARDRAIL PER APPLICABLE DETAIL AT LEFT IS REQUIRED AT BOTH APPROACH BRIDGE END POSTS WITH ONE-WAY TRAFFIC AND AT ALL 4 BRIDGE END POSTS WITH 2-LANES & 2-WAY TRAFFIC.
   (b) BRIDGE END POSTS AT THE TRAILING END OF ONE-WAY TRAFFIC OR AT THE TRAILING END OF TWO-WAY TRAFFIC ON MULTI-LANE(FOUR OR MORE) FACILITIES DOES NOT REQUIRE GUARDRAIL UNLESS STEEP SLOPES OR OTHER CONDITION WARRANTS GUARDRAIL FOR TRAFFIC COMING OFF OF BRIDGE. IF REQUIRED FOR THIS CONDITION, GUARDRAIL TYPE SHALL BE AS WARRANTED & WITHOUT ADDITIONAL POST/DOUBLE THICK RAIL.
5. SKETCHES SHOWN HERE FOR GUARDRAIL, TERMINALS, AND ANCHORAGES ARE REPRESENTATIVE. SEE SEPERATE STANDARDS OR DETAILS FOR SPECIFIC REQUIREMENTS.
6. TYPE 12A TERMINALS SHALL BE TAPERED PER MANUFACTURER'S SPECIFICATIONS SO THAT THE EXTRUDER/IMPACT HEAD WILL NOT PROTRUDE OVER CURB FACE.

SPECIAL NOTE:
LOCATION AND QUANTITIES GIVEN IN THE PLANS FOR GUARDRAIL, TERMINALS, AND ANCHORAGES ARE ESTIMATES MADE FROM OFFICE COMPUTATIONS. A FINAL DETERMINATION AS TO LOCATIONS AND QUANTITIES OF GUARDRAIL, TERMINALS, AND ANCHORAGES WILL BE MADE BY THE ENGINEER OR A REPRESENTATIVE FROM THE OFFICE OF TRAFFIC OPERATIONS AFTER CONSTRUCTION OF ROADWAY AND CURB. THIS APPLIES TO ALL CONDITIONS SHOWN ON THIS STANDARD.

NOTE: APPLICATION OF ABOVE DETAILS IS TYPICAL FOR URBAN TYPE FACILITIES WITH CONTINOUS CONCRETE CURB & GUTTER ADJACENT TO THE PAVEMENT. SEE SEPARATE DETAILS WHERE SECTIONS OF ASPHALT CURB ARE LOCATED UNDER GUARDRAIL ON SHOULDERS OF RURAL TYPE FACILITIES.

BY	REVISION	DATE
PJN	REV. BRDG WALK WIDTH, SEC F-F	07-01-26
	W-BEAM OFFSET & MISC. OTHER	
FBF	REV TP12 TO TP12A & NOTE 6	01-29-16

DEPARTMENT OF TRANSPORTATION
STATE OF GEORGIA

STANDARD GUARDRAIL LOCATION

(ON ROADS WITH CURB AND GUTTER, HEADER CURB OR INTEGRAL CURB)
31 INCH GUARDRAIL HEIGHT

NOT TO SCALE | AUGUST 2011

DES. ____ DRW. ____ TRA. ____ CHK. ____

(SUBMITTED) Daniel C. Pass — STATE DESIGN POLICY ENGR.

(APPROVED) Margaret B Pisele — CHIEF ENGINEER

NUMBER 4391

STATE	PROJECT NUMBER	SHEET NO.	TOTAL SHEETS
GA.			

TYPICAL PLAN VIEWS ALONG ROADWAY

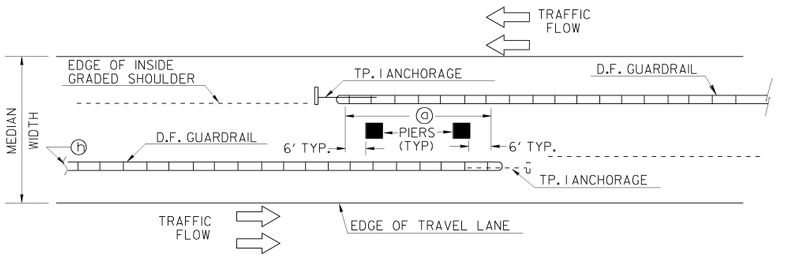

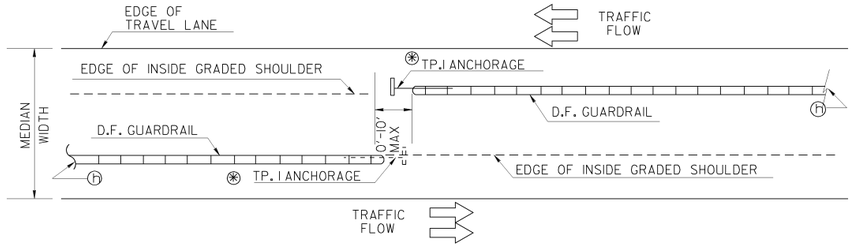

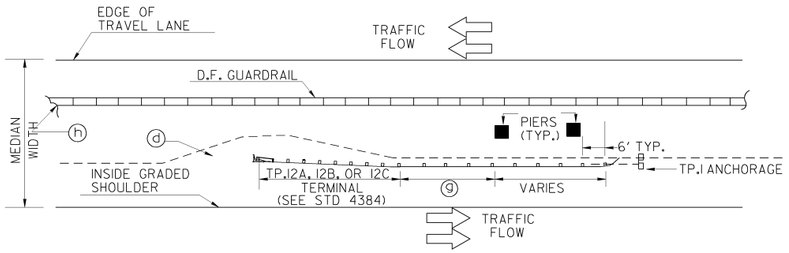

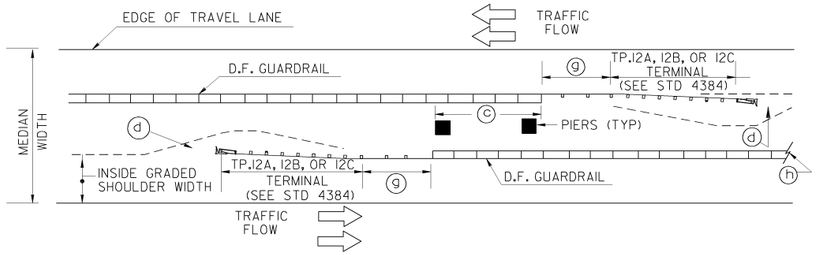

- (a) - LIMITS OF SHIELDED AREA OR 25 FT MIN
- (b) - OVERLAP DOUBLE FACED GUARDRAIL: 200' TYP. WITH TYPE I2A/B/C TERMINALS; I25' TYP. WITH TYPE I0-D ANCHORAGES
- (c) - OVERLAP DOUBLE FACED GUARDRAIL; I00' MIN.
- (d) - GRADED SHOULDER FLARED IF MEDIAN SLOPES ARE STEEPER THAN I0:I.
- (e) - END GUARDRAIL & ANCHORAGE AS CLOSE TO APPROACH SLAB AS POSSIBLE.
- (f) - REDUCED POST SPACINGS (3'-I½" C. TO C.) REQ'D. BEGINNING 40' +- IN ADVANCE OF APPROACH SLAB
- (g) - 200' TYPICAL OR AS NEEDED BETWEEN TP.I2A, I2B, OR I2C TERMINAL AND BEGINNING OF OBJECT
- (h) - DOUBLE FACED GUARDRAIL CONTINUOUS TO TERMINAL, ANCHORAGE, OR CONNECTION, AS SPECIFIED
- (*) WHERE LOCATIONS ARE REVERSED (GUARDRAIL BEING TERMINATED ON TRAFFIC APPROACH END) THE ANCHORAGES SHALL BE TYPE I0-D, INSTEAD OF TYPE I ANCHORAGE

SPECIAL NOTE:

WHERE A TERMINAL IS EXPOSED TO TRAFFIC FROM BOTH SIDES OF THE MEDIAN, A TYPE I0-D ANCHORAGE IS REQUIRED.

NOTE:

THESE DETAILS ARE TYPICAL FOR USE ON LIMITED ACCESS TYPE PROJECTS WHERE CONTINUOUS DOUBLE FACED GUARDRAIL IS REQUIRED IN THE MEDIAN.

TYPICAL BEGINNING OR END OF GUARDRAIL

NOTE: SEE SEPARATE SHEET FOR DETAILS OF OPENINGS FOR EMERGENCY VEHICLES.

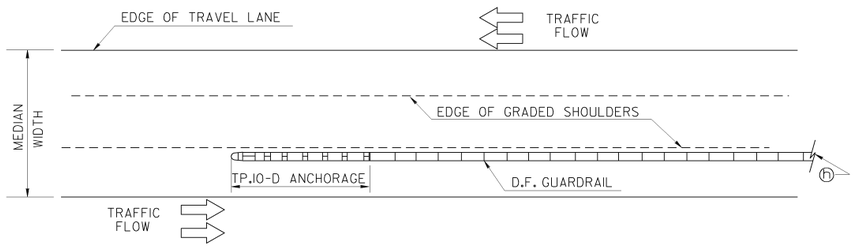

TYPICAL CROSS SECTION

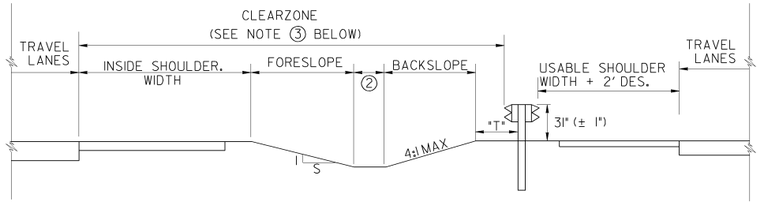

(2)

S: I	DITCH WIDTH
6: I	2'-0" MIN
4: I	4'-0" MIN

MIN. "T"
I'-0" WITH 6' POST

(3) IF DOUBLE FACED GUARDRAIL ENCROACHES INTO THE CLEARZONE, GUARDRAIL MUST BE PROVIDED ON BOTH SIDES OF MEDIAN UNLESS I0:I SLOPES ARE PROVIDED ON FORESLOPE AND BACKSLOPE.

TYPICAL PLAN VIEWS AT BRIDGE ENDS

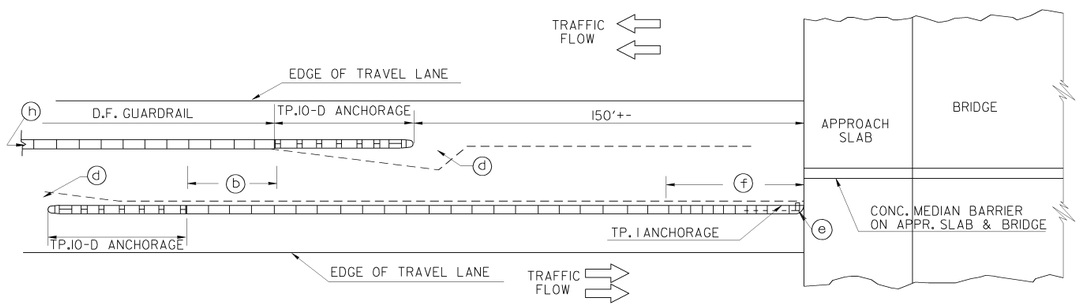

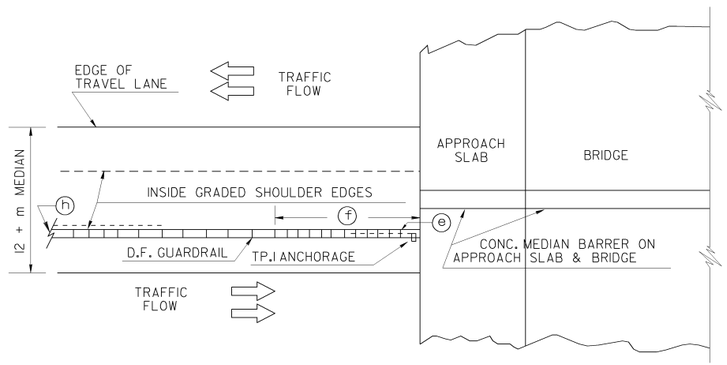

GENERAL NOTES:

1. SEE SEPARATE STANDARDS, CONSTRUCTION DETAILS, AND/OR SPECIFICATIONS AS APPLICABLE FOR GUARDRAIL, TERMINAL, AND ANCHORAGE REQUIREMENTS.
2. NEGATIVE SLOPES LOCATED IN FRONT OF GUARDRAIL, TERMINALS, AND ANCHORAGES SHALL BE I0:I OR FLATTER.
3. SEE SEPERATE DETAILS WHERE TYPE I0-D ANCHORAGES AND TYPE I2A, I2B, AND I2C TERMINALS ARE SPECIFIED.

DEPARTMENT OF TRANSPORTATION
STATE OF GEORGIA

STANDARD
LOCATION OF CONTINUOUS DOUBLE FACED GUARDRAIL IN MEDIAN 3I INCH GUARDRAIL HEIGHT

NO SCALE

DATE: I-29-16

REVISION

BY

DES. ____
DRW. ____
TRA. ____
CHK. ____

(SUBMITTED) STATE DESIGN POLICY ENGINEER

(APPROVED) Margaret B Pinkle CHIEF ENGINEER

NUMBER 4392

STATE	PROJECT NUMBER	SHEET NO.	TOTAL SHEETS
GA.			

NOTE: GLARE SCREEN WILL BE REQUIRED ONLY WHERE SPECIFIED. DETAILS SHOWN ON TYPE (S-1) BARRIER IS TYPICAL FOR ALL CONCRETE GLARE SCREENS. BOTTOM LONGITUDINAL BAR MAY BE OMITTED IF SCREEN IS NOT SLIP FORMED. JOINTS IN THE GLARE SCREEN SHALL MATCH THOSE IN THE BARRIER. TRANSITION FROM ONE SCREEN HEIGHT TO ANOTHER SHALL BE FROM ONE JOINT TO THE NEXT OR AS DIRECTED BY THE ENGINEER AND SHALL BE MEASURED FOR PAYMENT AS 1'-6" HEIGHT GLARE SCREEN. TOP OF 1'-6" HT. SCREEN MAY BE INCREASED TO 8⅔" WIDE AT CONTRACTOR'S OPTION.

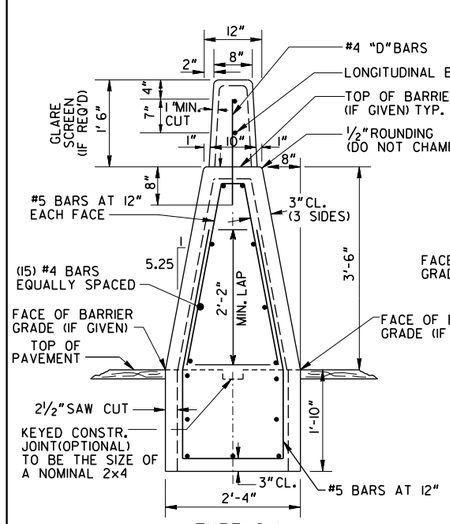

TYPE S-1
(NORMAL SECTION, X=0)

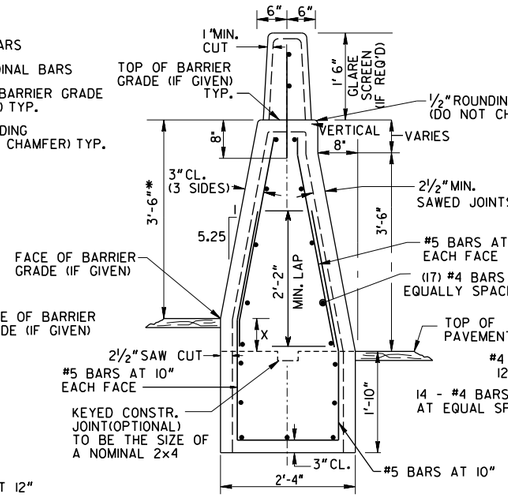

TYPE S-2
(SUPERELEVATED SECTION OR INDEPENDENT GRADES, X= 0'-0" + TO 1'-0" MAX.)

ALTERNATE:
WIRE FABRIC REINFORCING OR ALTERNATE REBAR SIZE/SPACING MAY BE USED INSTEAD OF SPECIFIED REBARS IF DETAILS ARE SUBMITTED TO & APPROVED BY THE GA. D.O.T. PRIOR TO USE.

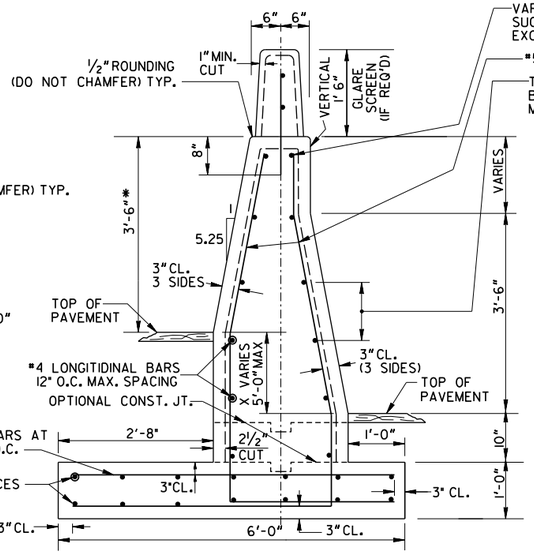

TYPE S-3
(SUPERELEVATED SECTION OR INDEPENDENT GRADES, X= 1'-0" + TO 5'-0" MAX.)

MAX. FACTORED BEARING PRESSURE	TYPE
0.9 KSF	S-1
1.0 KSF	S-2
2.1 KSF	S-3

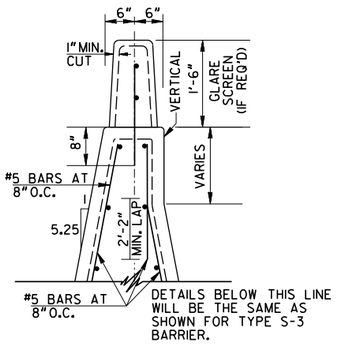

DETAIL "A"

THIS 18" AREA VOID IF LIGHT STDS. ARE INSTALLED ON PROJECT. IF ONLY FUTURE PROVISIONS ARE MADE FOR LIGHT STDS. ADD BOND BREAKER & FILL WITH CONCRETE.

** ALTERNATE:
INSTEAD OF "D" BARS, #4 STRAIGHT DOWEL BARS SPACED AT 24" O.C. MAY BE USED. LENGTH OF DOWELS SHALL BE 4" GREATER THAN HEIGHT OF GLARE SCREEN.

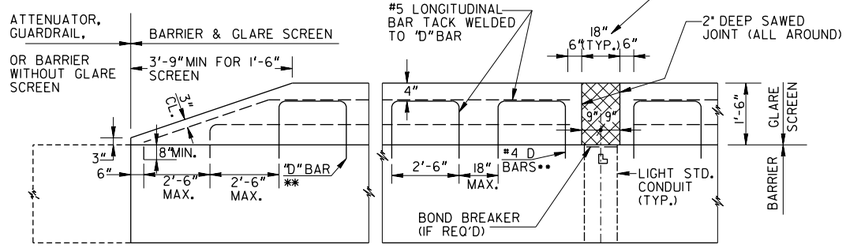

GLARE SCREEN TAPER

"D" BAR SPACING

NOTE:
TAPER SHOWN ABOVE IS FOR USE ONLY WHERE SCREEN IS TERMINATED. DO NOT USE TAPER WHERE SCREEN IS INTERCEPTED BY PIER OR OTHER OBSTACLE. SEE SEPARATE PLANS FOR GLARE SCREEN AT PIERS OR WHERE BARRIER TOP WIDENS.

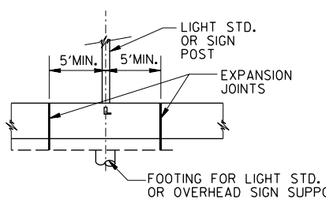

JOINT SPACING RIGID FOOTING LOCATIONS

NOTE:
ADJUST EXPANSION JOINT SPACING SUCH THAT NEAREST JOINT IS 5 FT. FROM ℄ OF POST.
(SEE GEN. NOTE NO.4.A.4.)

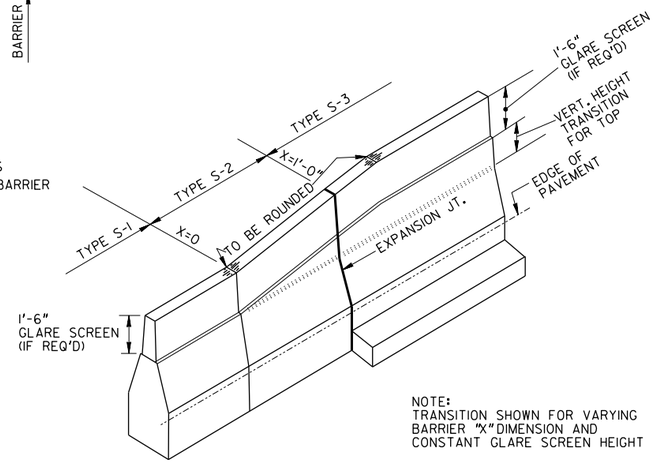

NOTE:
TRANSITION SHOWN FOR VARYING BARRIER "X" DIMENSION AND CONSTANT GLARE SCREEN HEIGHT

TRANSITION SECTION

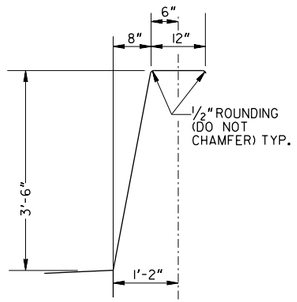

*BARRIER FACE DIMENSIONS

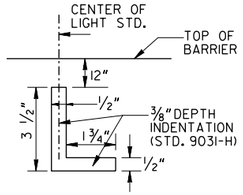

LIGHT STANDARD MARKING

GENERAL NOTES:

1. SPECIFICATIONS: GEORGIA STANDARD CURRENT EDITION, AND SUPPLEMENTS THERETO.
2. ALL CONCRETE SHALL BE CLASS "AA". REINFORCING STEEL SHALL BE GRADE 60. EXPOSED CONCRETE SURFACES SHALL RECEIVE A TYPE III FINISH. SEE SECTION 500.
3. CONSTRUCTION TOLERANCE - THE TOP SURFACE SHALL BE CHECKED FOR GRADE AND ALIGNMENT AND ANY VARIATION FROM THE ESTABLISHED LINE AND GRADE, GREATER THAN ⅛' IN 10'-0", WHEN CHECKED WITH A STRAIGHT EDGE OF NOT LESS THAN 10'-0" IN LENGTH, SHALL BE REMOVED AND RESET AS DIRECTED BY THE ENGINEER.
4. CONSTRUCTION METHOD-
   A. CAST-IN-PLACE (RIGID FORMS)
      (1.) THE MEDIAN BARRIER SHALL BE PLACED ON A BASE OF THE SAME MATERIAL AND THICKNESS AS THE ADJACENT TRAVEL LANES. SEE SECTION 209 AND TYPICAL SECTIONS.
      (2.) FORMS SHALL BE SO CONSTRUCTED AND ANCHORED AS NOT TO "FLOAT UP" OR BE DISPLACED DURING CONSTRUCTION AND THE LINE AND GRADE ESTABLISHED SHALL BE MET WITHIN TOLERANCES SPECIFIED.
      (3.) EXPANSION JOINTS ARE REQUIRED IN ALL BARRIER TYPES AT A MAXIMUM SPACING OF 300'. A 1" PREFORMED JOINT FILLER SHALL BE USED AT THE EXPANSION JOINTS. GALVANIZED 10d NAILS SHALL BE USED TO INSTALL EXPANSION MATERIAL. CONTRACTION JOINTS SHALL BE PLACED AT EVERY 20'. CONTRACTION JOINTS MAY BE SAWED. IF SAWED JOINTS ARE USED, THEY SHALL BE ¼" WIDE AND TO THE DEPTH SHOWN IN THE DETAILS. THE SAWED JOINT SHALL BE DONE WITHIN 24 HOURS OF PLACEMENT OF THE BARRIER.
      (4.) NO JOINT SHALL BE CLOSER TO A LIGHT STANDARD OR SIGN POST THAN 5'. JOINTS SHALL BE EQUALLY SPACED ABOUT THE LIGHT STANDARD OR SIGN POST CENTERLINE. ADJUST ADJACENT JOINTS TO A BALANCED SPACING FOR A PLEASING APPEARANCE. AN EXPANSION JOINT IS REQUIRED 5' EACH SIDE OF EACH LIGHT STANDARD.
      (5.) CAST IN PLACE MEDIAN BARRIER MAY BE CONSTRUCTED IN MORE THAN ONE POUR. THIS METHOD WILL REQUIRE KEYED CONSTRUCTION JOINTS AS SHOWN. OTHER CONSTRUCTION JOINTS MAY BE APPROVED BY THE ENGINEER.
   B. CAST-IN-PLACE (SLIP FORM):
      1. NOTES 4A.1, 4A.3, 4A.4 AND 4A.5 SHALL APPLY TO THE SLIP FORM METHOD OF CONSTRUCTION
5. REINFORCEMENT STEEL, WHERE REQUIRED
   A. BARRIER: ALL LONGITUDINAL STEEL SHALL BE CONTINUOUS EXCEPT: REQUIRED STOPS AT EXPANSION JOINTS; AND OPTIONAL STOPS NOT CLOSER THAN 100', AT SELECTED CONTRACTION JOINTS.
   B. GLARE SCREEN: ALL LONGITUDINAL REINFORCING STEEL TO BE NO. 5 BARS CONTINUOUS THROUGHOUT THE FULL LENGTH OF THE GLARE SCREEN, EXCEPT ACROSS EXPANSION JOINTS, THROUGH LIGHT STANDARDS AND SIGN POSTS.
   C. LONGITUDINAL REINFORCEMENT SHALL BE LAP SPLICED 2'-4". VERTICAL REINFORCEMENT SHALL BE LAP SPLICED 2'-4". LONGITUDINAL STEEL SHALL HAVE 2" CLEAR AT EXPANSION JOINTS.
6. ALL GLARE SCREENS REQUIRE #4 VERTICAL BARS FIRMLY BONDED INTO BARRIER TOP, VERTICAL BARS MAY BE "D" BARS AT 18" MAX. SPACINGS OR STRAIGHT DOWELS AT 24" MAX. SPACINGS. VERTICAL BARS SHALL BE EQUALLY SPACED BETWEEN JOINTS. DRILLING IS REQUIRED IN EXIST. BARRIERS.
7. TYPE S-1, S-2, AND S-3 MEDIAN BARRIERS ARE DESIGNED IN ACCORDANCE WITH THE AASHTO LRFD BRIDGE DESIGN SPECIFICATIONS, 8TH EDITION, 2017. THE BARRIERS INCLUDED IN THE DESIGN HAVE BEEN CERTIFIED BY THE DEPARTMENT TO SATISFY MASH TL-4 REQUIREMENTS FOR PROJECTS IN GEORGIA.
8. IF OVERHEAD SIGN SUPPORTS ARE TO BE PLACED ON TOP OF THE BARRIER, THE FOOTING SHALL BE INCORPORATED AS AN INTEGRAL PART OF THE BARRIER. THE DESIGN OF THE SIGN SUPPORT FOOTING SHALL BE DESIGNED BY THE CONTRACTOR & APPROVED BY THE DEPARTMENT OF TRANSPORTATION PRIOR TO THE START OF CONSTRUCTION. SEE STANDARD 4945 FOR TYPE 26S CONCRETE BARRIER WHERE REQUIRED.
9. IF LIGHT STANDARDS ARE TO BE PLACED ON TOP OF THE MEDIAN BARRIER, THEIR FOOTING SHALL BE INCORPORATED AS AN INTEGRAL PART OF THE BARRIER. SEE THE APPROPRIATE CONSTRUCTION DETAIL SHEETS FOR ADDITIONAL INFORMATION. THE COST OF THE FOOTING AND OTHER NECESSARY MATERIALS TO BUILD THE FOOTING UP TO THE TOP OF THE BARRIER SHALL BE INCLUDED IN THE OVERALL BID FOR THE MEDIAN BARRIER.
10. SEE SEPARATE PLANS FOR LIGHT STANDARDS OR OVERHEAD SIGNS (IF APPLICABLE).
11. CENTERLINE STATIONS SHALL BE CAST INTO THE SLOPING FACE ON BOTH SIDES OF THE BARRIER 8" ABOVE THE PAVEMENT SURFACE IN ACCORDANCE WITH GA. STD. 9031-H. EACH SIDE OF THE CONCRETE BARRIER AT CENTER OF LIGHT STANDARD SHALL BE MARK WITH THE LETTER "L" AS SHOWN 12" FROM THE BARRIER TOP. THE COST OF THE CENTERLINE STATION LETTERING WILL BE INCLUDED IN THE OVERALL BID PRICE FOR THE MEDIAN BARRIER.
12. CONCRETE GLARE SCREEN SHALL BE PLACED ON BARRIER AS SPECIFIED ON THE PLANS. COST OF GLARE SHALL BE PAID FOR AS SECTION 649 CONCRETE GLARE SCREEN, 18 INCH, LF.

BARRIER TYPE	DIMENSION X	BASIS OF PAYMENT
S-1	0'-0"	CONCRETE BARRIER, TP S-1 - LF
S-2	0'-0" TO 1'-0"	CONCRETE BARRIER, TP S-2 - LF
S-3	1'-0" TO 5'-0"	CONCRETE BARRIER, TP S-3 - LF

DEPARTMENT OF TRANSPORTATION
STATE OF GEORGIA

STANDARD

TYPE S-1, S-2 AND S-3 CONCRETE MEDIAN BARRIER AND CONCRETE GLARE SCREEN

NO SCALE — MAY 2020

DATE / REVISION / BY

DES. DDF
DRW. DDF
CHK. CEW
REV. WMD/BAS

(SUBMITTED) R Christopher Rudd
STATE DESIGN POLICY ENGINEER

(APPROVED) Margaret B Pinkle
CHIEF ENGINEER

NUMBER 4941A

STATE	PROJECT NUMBER	SHEET NO.	TOTAL SHEETS
GA.			

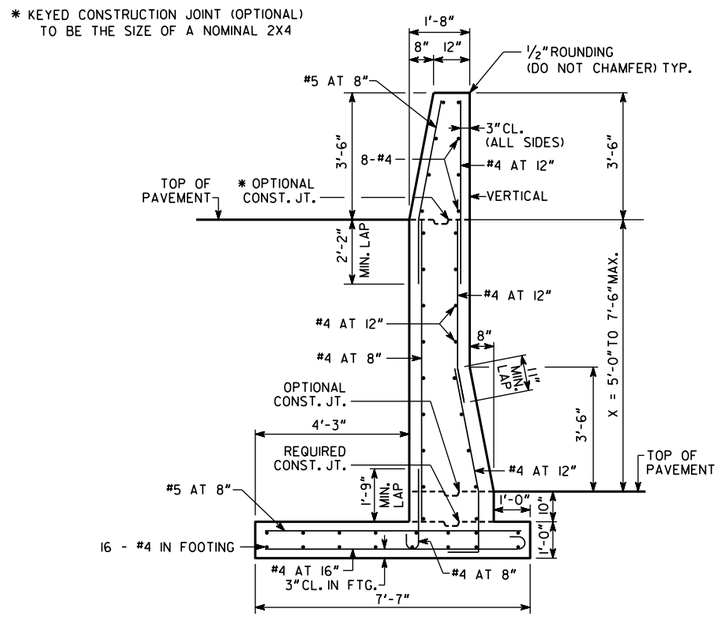

TYPE S-3A MEDIAN BARRIER

(SUPERELEVATED SECTION OR INDEPENDENT GRADES, X = 5'-0" TO 7'-6" MAX.)

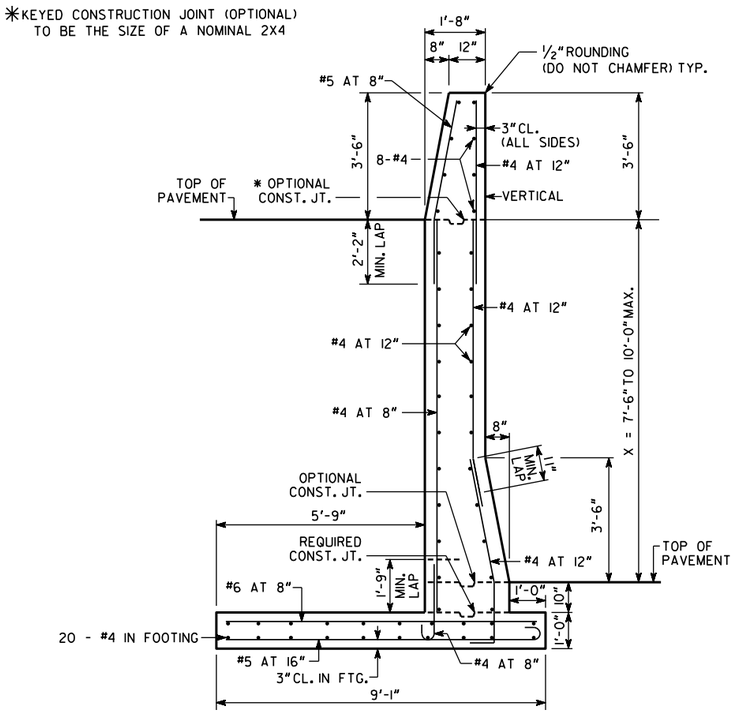

TYPE S-3B MEDIAN BARRIER

(SUPERELEVATED SECTION OR INDEPENDENT GRADES, X = 7'-6" TO 10'-0" MAX.)

Δ (INCHES)	MAX. FACTORED BEARING PRESSURE	TYPE
1/8"	2.2 KSF	S-3A
5/16"	2.6 KSF	S-3B

GENERAL NOTES:

1. SPECIFICATIONS: GEORGIA STANDARD, CURRENT EDITION, AND SUPPLEMENTS THERETO.
2. CONCRETE SHALL BE CLASS "AA". REINFORCING STEEL SHALL BE GRADE 60.
3. DRAINAGE DETAIL ALTERNATES A OR B, PER THE DETAIL ON THIS SHEET, ARE REQUIRED FOR TYPES S-3A AND S-3B. INCLUDE COST OF MATERIALS AND WORK IN PRICE BID FOR BARRIER.
4. MAINTAIN 3" COVER ON ALL REINFORCING IN STEM AND BARRIER AND 3" COVER IN FOOTING.
5. PLACE AND TIE ALL REINFORCING STEEL IN ACCORDANCE WITH THE GEORGIA DOT SPECIFICATIONS. DO NOT WELD REINFORCING STEEL. LONGITUDINAL REINFORCING SHALL NOT EXTEND THROUGH EXPANSION JOINTS. STEM LONGITUDINAL REINFORCING SHALL NOT EXTEND THROUGH CONTRACTION JOINTS. LONGITUDINAL REINFORCING SHALL BE LAP SLICED 2'-4". LONGITUDINAL FOOTING REINFORCING SHALL BE CONTINUOUS BETWEEN EXPANSION JOINTS. WHEN FOOTING SIZE CHANGES, LONGITUDINAL REINFORCING FOR SMALLER FOOTING SHALL EXTEND 1'-4" MINIMUM INTO LARGER FOOTING.
6. EXPOSED CONCRETE SURFACES SHALL RECEIVE A TYPE III FINISH.
7. EXPANSION JOINTS SHALL BE SPACED UNIFORMLY AT A MAXIMUM SPACING OF 80'-0" AND EXTEND THROUGH THE BARRIER, STEM AND FOOTING. CONTRACTION JOINTS SHALL BE LOCATED AT A MAXIMUM SPACING OF 20'-0" AND EXTEND THROUGH THE BARRIER AND STEM.
8. 1" PREFORMED JOINT FILLER SHALL BE USED AT EACH EXPAINSION JOINT. GALVANIZED 10d NAILS SHALL BE USED TO INSTALL EXPANSION MATERIAL.
9. EXPANSION AND CONTRACTION JOINTS IN TYPES S-3A AND S-3B SIDE BARRIER SHALL BE WATERPROOFED ON THE BACK SIDE. WATERPROOFING SHALL BE 3-PLY AND EXTEND FROM 1'-0" BELOW FINISH GRADE TO TOP OF FOOTING FOR 1'-6" MIN. EACH SIDE OF JOINT.
10. TYPES S-3A AND S-3B MEDIAN BARRIER SHALL BE PAID FOR PER LIN. FT. AS CONCRETE MEDIAN BARRIER, TYPE S-3A AND S-3B. INCLUDE COST OF WATERPROOFING AND ALL INCIDENTALS AS SPECIFIED IN SECTION 621 OF THE STANDARD SPECIFICATIONS IN THE PRICE BID.
11. TYPE S-3A AND S-3B MEDIAN BARRIERS ARE DESIGNED IN ACCORDANCE WITH THE AASHTO LRFD BRIDGE DESIGN SPECIFICATIONS, 8TH EDITION, 2017. THE BARRIERS INCLUDED IN THE DESIGN HAVE BEEN CERTIFIED BY THE DEPARTMENT TO SATISFY MASH TL-4 REQUIREMENTS FOR PROJECTS IN GEORGIA.
12. SIDE BARRIER DESIGN FOR THE FOLLOWING SOIL PROPERTIES:

	FOUNDATION	BACKFILL
COHESION =	0 KSF	0 KSF
θ =	28°	28°
UNIT WT. =	0.120 KCF	0.120 KCF

13. WIRE FABRIC REINFORCING OR ALTERNATE REBAR SIZE/SPACING MAY BE USED IF DETAILS ARE SUBMITTED TO AND APPROVED BY THE ENGINEER PRIOR TO USE.

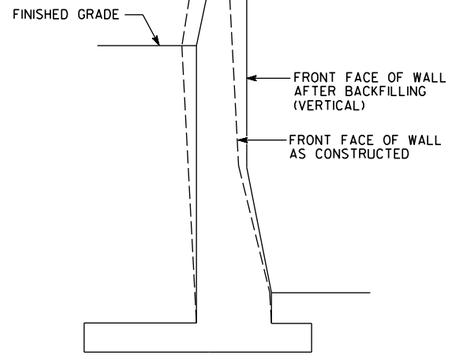

WALL BATTER DETAIL

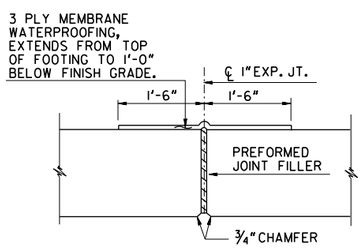

DETAIL OF EXPANSION JOINT

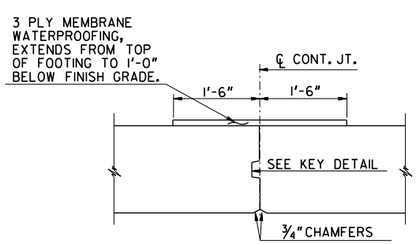

DETAIL OF CONTRACTION JOINT

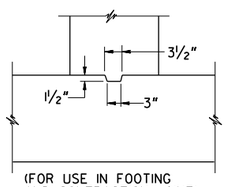

(FOR USE IN FOOTING AND CONTRACTION JOINT)

SHEAR KEY DETAIL

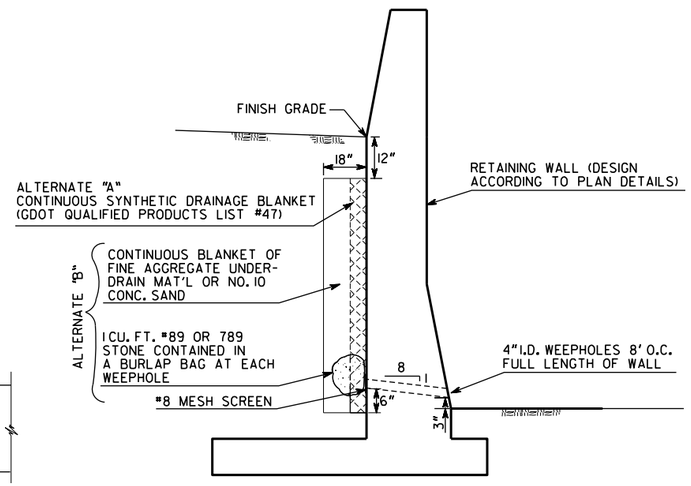

DRAINAGE DETAILS

DEPARTMENT OF TRANSPORTATION
STATE OF GEORGIA

STANDARD

CONCRETE MEDIAN BARRIER TYPES S-3A AND S-3B

NO SCALE — MAY 2020

BY	REVISION	DATE
DES. CEW		
DRW. DDF		
CHK. DDF		
REV. WMD/BAS		

(SUBMITTED) R Christopher Rudd
STATE DESIGN POLICY ENGINEER

(APPROVED) Margaret B Pinkelo
CHIEF ENGINEER

NUMBER 494IB

STATE	PROJECT NUMBER	SHEET NO.	TOTAL SHEETS
GA.			

* NON-CONTACT LAPS ARE ACCEPTABLE. WHEN WALL HEIGHT IS LESS THAN 2'-2" HOOK THE #5 FROM THE BARRIER INTO THE FOOTING AND DELETE S AND X.

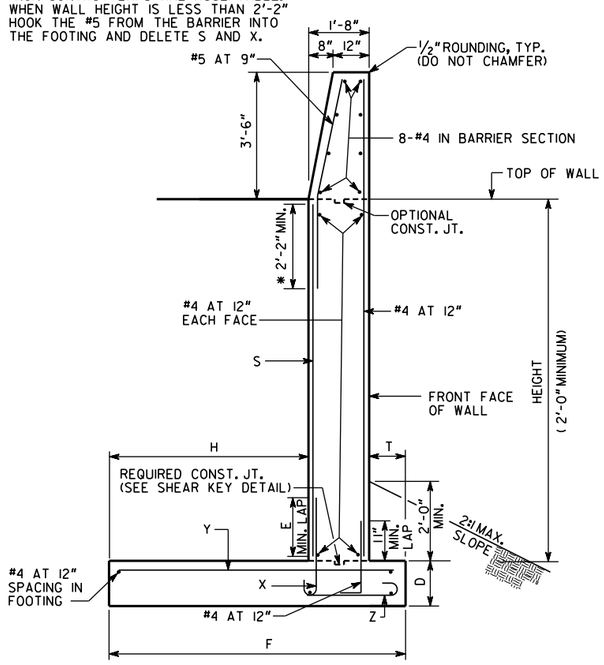

TYPICAL BARRIER SECTION

MAX. HEIGHT	WALL DIMENSIONS					REINFORCEMENT				Δ (INCHES)	MAX. FACTORED BEARING PRESSURE	TYPE
	D	E	F	H	T	S	X	Y	Z			
7'	1'-0"	2'-2"	6'-8"	3'-9"	1'-3"	#5 AT 11"	#5 AT 11"	#5 AT 11"	#4 AT 12"	0"	2.6 KSF	2-S
9'	1'-0"	2'-2"	8'-2"	5'-3"	1'-3"	#5 AT 9"	#5 AT 9"	#5 AT 9"	#4 AT 12"	1/16"	2.4 KSF	2-SA
11'	1'-3"	2'-2"	9'-2"	6'-3"	1'-3"	#5 AT 8"	#5 AT 8"	#6 AT 8"	#4 AT 12"	1/8"	3.0 KSF	2-SB
13'	1'-3"	2'-2"	10'-5"	7'-3"	1'-6"	#5 AT 7"	#5 AT 7"	#6 AT 7"	#4 AT 12"	5/16"	3.3 KSF	2-SC

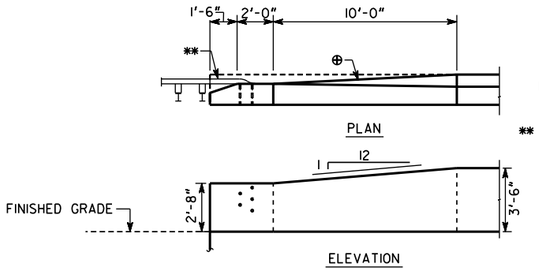

** - SEE GDOT STD. 4382 AND 4385 FOR INFORMATION ON HOLE LAYOUT AND ATTACHMENT

BARRIER TRANSITION DETAIL

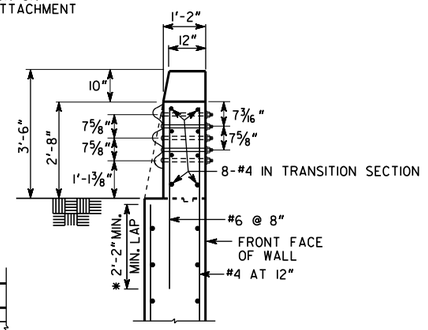

SECTION A-A

NOTE- VARY LENGTH OF VERTICAL BARS IN THE TRANSITION TO FOLLOW THE TOP OF THE BARRIER.

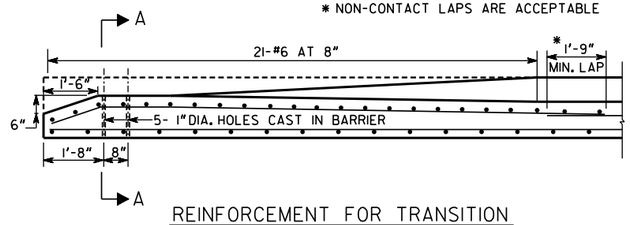

REINFORCEMENT FOR TRANSITION

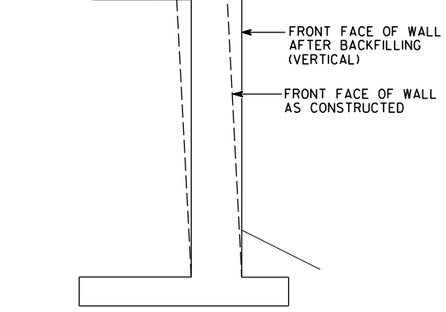

WALL BATTER DETAIL

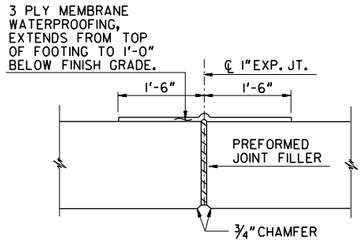

DETAIL OF EXPANSION JOINT

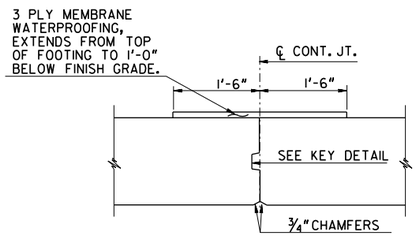

DETAIL OF CONTRACTION JOINT

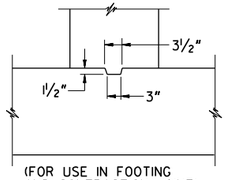

(FOR USE IN FOOTING AND CONTRACTION JOINT)

SHEAR KEY DETAIL

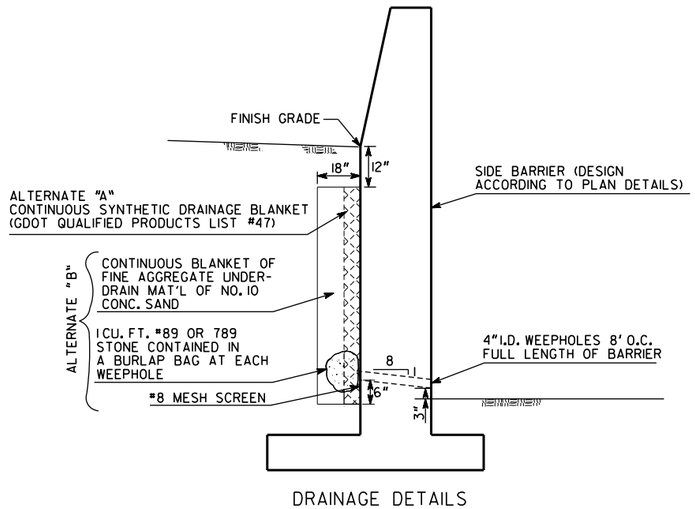

DRAINAGE DETAILS

GENERAL NOTES:

1. SPECIFICATIONS: GEORGIA STANDARD, CURRENT EDITION, AND SUPPLEMENTS THERETO.
2. CONCRETE SHALL BE CLASS "AA". REINFORCING STEEL SHALL BE GRADE 60.
3. DRAINAGE DETAIL ALTERNATES A OR B, PER THE DETAIL ON THIS SHEET, ARE REQUIRED FOR TYPES 2-S, 2-SA, 2-SB, AND 2-SC. INCLUDE COSTS OF MATERIALS AND WORK IN PRICE BID FOR SIDE BARRIER.
4. MAINTAIN 2" COVER ON ALL REINFORCING IN STEM AND BARRIER AND 3" COVER IN FOOTING. USE OF FORMLINERS PER THE CONTRACT WILL REQUIRE OVERALL STEM AND BARRIER WIDTHS TO BE INCREASED TO MAINTAIN COVER.
5. EXPOSED CONCRETE SURFACES SHALL RECEIVE A TYPE III FINISH UNLESS A FORMLINER IS REQUIRED PER THE CONTRACT. FORMLINERS SHALL NOT BE APPLIED TO THE BARRIER FACE.
6. APPLY A GRAFFITI PROOF COATING AS PER SECTION 838 TO ALL EXPOSED CONCRETE SURFACES.
7. SIDE BARRIERS OVER 20'-0" IN LENGTH SHALL HAVE CONTRACTION JOINTS SPACED AT A MAXIMUM OF 20'-0". CONTRACTION JOINTS SHALL EXTEND THROUGH THE BARRIER, AND STEM. SIDE BARRIERS OVER 80'-0" IN LENGTH SHALL HAVE EXPANSION JOINTS SPACED UNIFORMLY AT A MAXIMUM SPACING OF 80'-0" WITH 1" PREFORMED JOINT FILLER EXTENDING THROUGH BARRIER, STEM, AND FOOTING AT EACH EXPANSION JOINT. GALVANIZED 10d NAILS SHALL BE USED TO INSTALL EXPANSION MATERIAL.
8. PLACE AND TIE ALL REINFORCING STEEL IN ACCORDANCE WITH THE GEORGIA DOT SPECIFICATIONS. DO NOT WELD REINFORCING STEEL. LONGITUDINAL REINFORCING SHALL NOT EXTEND THROUGH EXPANSION JOINTS. STEM LONGITUDINAL REINFORCING SHALL NOT EXTEND THROUGH CONTRACTION JOINTS. LONGITUDINAL REINFORCING SHALL BE LAP SPLICED 2'-4". LONGITUDINAL FOOTING REINFORCING SHALL BE CONTINUOUS BETWEEN EXPANSION JOINTS. WHEN FOOTING SIZE CHANGES, LONGITUDINAL REINFORCING FOR SMALLER FOOTING SHALL EXTEND 1'-4" MINIMUM INTO LARGER FOOTING.
9. EXPANSION AND CONTRACTION JOINTS IN TYPES 2-S, 2-SA, 2-SB, AND 2-SC SIDE BARRIER SHALL BE WATERPROOFED ON THE BACK SIDE. WATERPROOFING SHALL BE 3-PLY AND EXTEND FROM 1'-0" BELOW FINISH GRADE TO TOP OF FOOTING FOR 1'-6" MIN. EACH SIDE OF JOINT.
10. TYPES 2-S, 2-SA, 2-SB AND 2-SC SIDE BARRIER SHALL BE PAID FOR PER LIN. FT. AS CONCRETE SIDE BARRIER, TYPE 2-S, 2-SA, 2-SB, OR 2-SC. INCLUDE COST OF WATERPROOFING AND ALL INCIDENTALS AS SPECIFIED IN SECTION 621 OF THE STANDARD SPECIFICATIONS IN THE PRICE BID.
11. TYPE 2-S, 2-SA, 2-SB AND 2-SC SIDE BARRIERS ARE DESIGNED IN ACCORDANCE WITH THE AASHTO LRFD BRIDGE DESIGN SPECIFICATIONS, 8TH EDITION, 2017. THE BARRIERS INCLUDED IN THE DESIGN HAVE BEEN CERTIFIED BY THE DEPARTMENT TO SATISFY MASH TL-4 REQUIREMENTS FOR PROJECTS IN GEORGIA.
12. SIDE BARRIERS DESIGNED FOR THE FOLLOWING SOIL PROPERTIES:

	FOUNDATION	BACKFILL
COHESION =	0 KSF	0 KSF
θ =	28°	28°
UNIT WT. =	0.120 KCF	0.120 KCF

13. WIRE FABRIC REINFORCING OR ALTERNATE REBAR SIZE/SPACING MAY BE USED IF DETAILS ARE SUBMITTED TO AND APPROVED BY THE ENGINEER PRIOR TO USE.
14. WHERE GUARDRAIL ATTACHMENT IS REQUIRED, USE BARRIER TRANSITION DETAIL. INCLUDE COSTS FOR TRANSITION AND THE FIVE 1" DIAM. HOLES, PROPERLY LOCATED FOR CONNECTING THE SPECIAL END SHOE IN THE PRICE BID FOR CONCRETE SIDE BARRIER, TYPE 2-S, 2-SA, 2-SB, OR 2-SC BASED ON STEM HEIGHT REQUIRED.

DEPARTMENT OF TRANSPORTATION
STATE OF GEORGIA

STANDARD

CONCRETE SIDE BARRIER TYPES 2-S, 2-SA, 2-SB AND 2-SC

NO SCALE — MAY 2020

BY	DATE	REVISION
DES. DDF		
DRW. DDF		
CHK. CEW		
REV. WMD/BAS		

(SUBMITTED) N Christopher Rudd
STATE DESIGN POLICY ENGINEER

(APPROVED) Margaret B Pinelo
CHIEF ENGINEER

NUMBER 4949B

STATE	PROJECT NUMBER	SHEET NO.	TOTAL SHEETS
GA.			

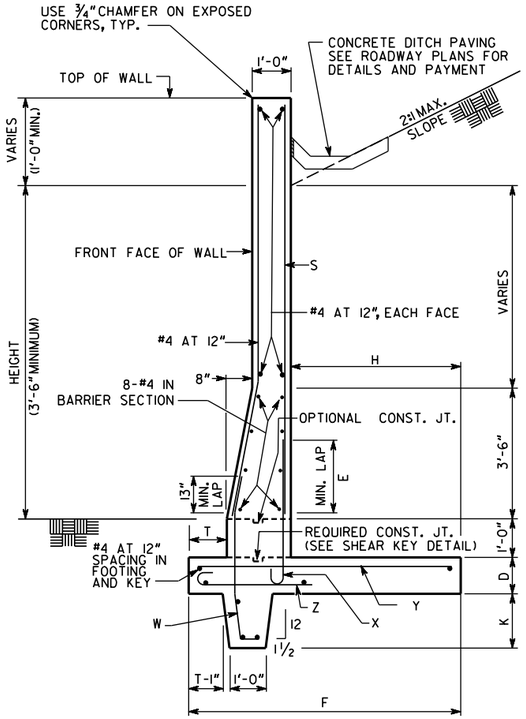

TYPICAL BARRIER SECTION

MAX. HEIGHT	WALL DIMENSIONS						REINFORCEMENT					Δ (INCHES)	MAX. FACTORED BEARING PRESSURE	TYPE
	D	E	F	H	T	K	S	W	X	Y	Z			
3'-6"	1'-0"	1'-9"	4'-4"	2'-2"	0'-6"	0'-6"	#4 AT 18"	#4 AT 12"	#4 AT 18"	#5 AT 18"	#4 AT 12"	0	1.4 KSF	6-S
4'-6"	1'-0"	1'-9"	5'-11"	3'-9"	0'-6"	0'-6"	#4 AT 18"	#4 AT 12"	#4 AT 18"	#6 AT 12"	#4 AT 12"	1/16"	1.6 KSF	
5'-6"	1'-0"	1'-9"	4'-6"	2-4"	0'-6"	2'-3"	#4 AT 18"	#4 AT 12"	#4 AT 18"	#5 AT 12"	#4 AT 12"	1/8"	2.4 KSF	6-SA
6'-6"	1'-0"	1'-9"	6'-4"	4'-2"	0'-6"	2'-3"	#4 AT 18"	#4 AT 12"	#4 AT 18"	#8 AT 12"	#4 AT 12"	3/16"	2.4 KSF	
7'-6"	1'-0"	1'-9"	6'-0"	3'-10"	0'-6"	3'-3"	#4 AT 12"	#4 AT 12"	#4 AT 12"	#9 AT 12"	#4 AT 12"	1/4"	3.1 KSF	6-SB
8'-6"	1'-0"	1'-9"	7'-9"	5'-7"	0'-6"	3'-3"	#4 AT 8"	#4 AT 12"	#4 AT 8"	#9 AT 8"	#4 AT 12"	5/16"	3.1 KSF	
9'-6"	1'-3"	2'-2"	7'-9"	4'-9"	1'-4"	4'-3"	#5 AT 10"	#5 AT 12"	#5 AT 10"	#9 AT 10"	#4 AT 12"	7/16"	3.3 KSF	6-SC
10'-6"	1'-3"	2'-2"	9'-9"	6'-9"	1'-4"	4'-3"	#5 AT 8"	#5 AT 12"	#5 AT 8"	#9 AT 8"	#4 AT 12"	9/16"	3.3 KSF	

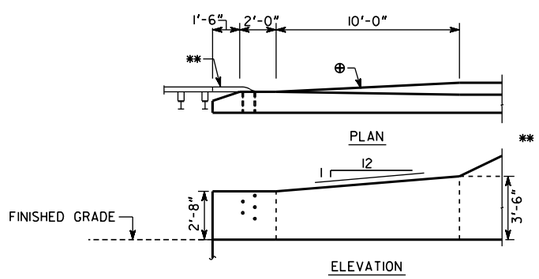

** - SEE GDOT STD. 4382 AND 4385 FOR INFORMATION ON HOLE LAYOUT AND GUARDRAIL ATTACHMENT

BARRIER TRANSITION DETAIL

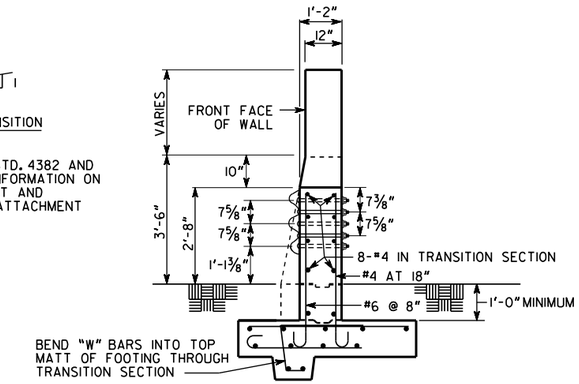

SECTION A-A

NOTE- VARY LENGTH OF VERTICAL BARS IN THE TRANSITION TO FOLLOW THE TOP OF THE BARRIER.

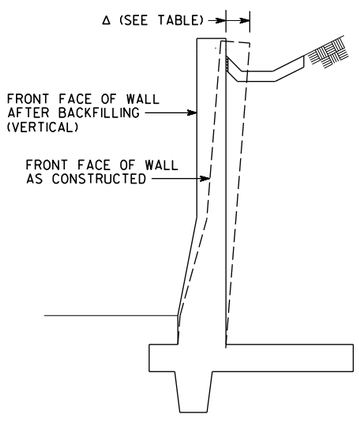

WALL BATTER DETAIL

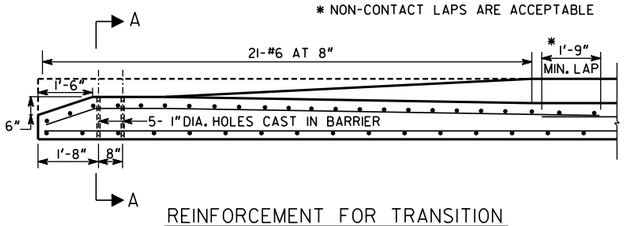

REINFORCEMENT FOR TRANSITION

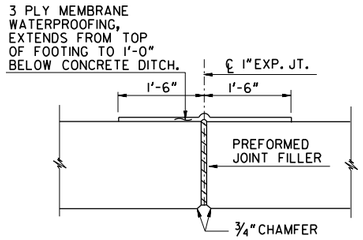

DETAIL OF EXPANSION JOINT

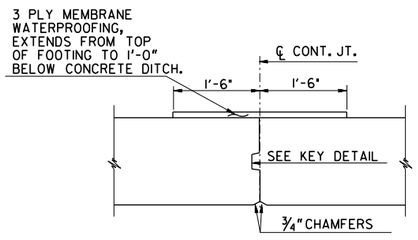

DETAIL OF CONTRACTION JOINT

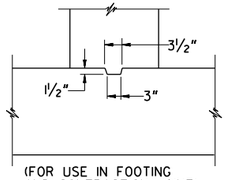

(FOR USE IN FOOTING AND CONTRACTION JOINT)

SHEAR KEY DETAIL

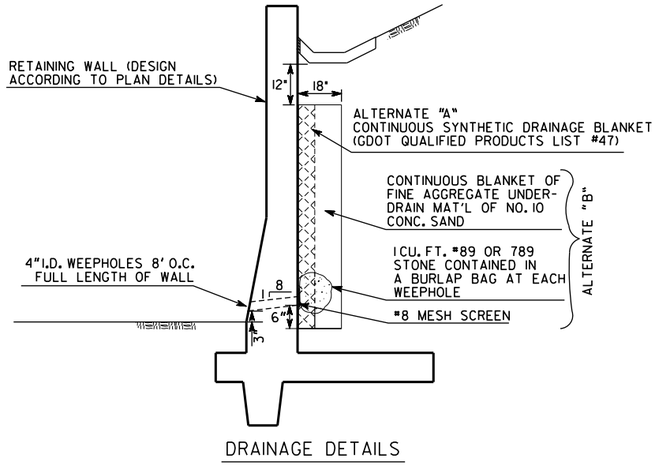

DRAINAGE DETAILS

GENERAL NOTES:

1. SPECIFICATIONS: GEORGIA STANDARD, CURRENT EDITION, AND SUPPLEMENTS THERETO.
2. CONCRETE SHALL BE CLASS "AA". REINFORCING STEEL SHALL BE GRADE 60.
3. DRAINAGE DETAIL ALTERNATES A OR B, PER THE DETAIL ON THIS SHEET, ARE REQUIRED FOR TYPES 6-S, 6-SA, 6-SB, AND 6-SC. INCLUDE COST OF MATERIALS AND WORK IN PRICE BID FOR BARRIER.
4. MAINTAIN 2" COVER ON ALL REINFORCING IN STEM AND BARRIER AND 3" COVER IN FOOTING. USE OF FORMLINERS PER THE CONTRACT WILL REQUIRE OVERALL STEM AND BARRIER WIDTHS TO BE INCREASED TO MAINTAIN COVER.
5. EXPOSED CONCRETE SURFACES SHALL RECEIVE A TYPE III FINISH UNLESS A FORMLINER IS REQUIRED PER THE CONTRACT. FORMLINERS SHALL NOT BE APPLIED TO THE BARRIER FACE.
6. APPLY A GRAFFITI PROOF COATING AS PER SECTION 838 TO ALL EXPOSED CONCRETE SURFACES.
7. SIDE BARRIERS OVER 20'-0" IN LENGTH SHALL HAVE CONTRACTION JOINTS SPACED AT A MAXIMUM OF 20'-0". CONTRACTION JOINTS SHALL EXTEND THROUGH THE BARRIER, AND STEM. SIDE BARRIERS OVER 80'-0" IN LENGTH SHALL HAVE EXPANSION JOINTS SPACED UNIFORMLY AT A MAXIMUM SPACING OF 80'-0" WITH 1" PREFORMED JOINT FILLER EXTENDING THROUGH BARRIER, STEM, AND FOOTING AT EACH EXPANSION JOINT. GALVANIZED 10d NAILS SHALL BE USED TO INSTALL EXPANSION MATERIAL.
8. PLACE AND TIE ALL REINFORCING STEEL IN ACCORDANCE WITH THE GEORGIA DOT SPECIFICATIONS. DO NOT WELD REINFORCING STEEL. LONGITUDINAL REINFORCING SHALL NOT EXTEND THROUGH EXPANSION JOINTS. STEM LONGITUDINAL REINFORCING SHALL NOT EXTEND THROUGH CONTRACTION JOINTS. LONGITUDINAL REINFORCING SHALL BE LAP SLICED 2'-4". LONGITUDINAL FOOTING REINFORCING SHALL BE CONTINUOUS BETWEEN EXPANSION JOINTS. WHEN FOOTING SIZE CHANGES, LONGITUDINAL REINFORCING FOR SMALLER FOOTING SHALL EXTEND 1'-9" MINIMUM INTO LARGER FOOTING.
9. EXPANSION AND CONTRACTION JOINTS IN TYPES 6-S, 6-SA, 6-SB, AND 6-SC SIDE BARRIER SHALL BE WATERPROOFED ON THE BACK SIDE. WATERPROOFING SHALL BE 3-PLY AND EXTEND FROM 1'-0" BELOW CONCRETE DITCH TO TOP OF FOOTING FOR 1'-6" MIN. EACH SIDE OF JOINT.
10. TYPES 6-S, 6-SA, 6-SB AND 6-SC SIDE BARRIER SHALL BE PAID FOR PER LIN. FT. AS CONCRETE SIDE BARRIER, TYPE 6-S, 6-SA, 6-SB, OR 6-SC. INCLUDE COST OF WATERPROOFING AND ALL INCIDENTALS AS SPECIFIED IN SECTION 621 OF THE STANDARD SPECIFICATIONS IN THE PRICE BID.
11. TYPE 6-S, 6-SA, 6-SB AND 6-SC SIDE BARRIERS ARE DESIGNED IN ACCORDANCE WITH THE AASHTO LRFD BRIDGE DESIGN SPECIFICATIONS, 8TH EDITION, 2017. THE BARRIER DETAILS INCLUDED IN THE DESIGN HAVE BEEN CERTIFIED BY THE DEPARTMENT TO SATISFY MASH TL-4 REQUIREMENTS FOR PROJECTS IN GEORGIA.
12. SIDE BARRIER DESIGN FOR THE FOLLOWING SOIL PROPERTIES:

	FOUNDATION	BACKFILL
COHESION =	0 KSF	0 KSF
θ =	28°	28°
UNIT WT. =	0.120 KCF	0.120 KCF

13. WIRE FABRIC REINFORCING OR ALTERNATE REBAR SIZE/SPACING MAY BE USED IF DETAILS ARE SUBMITTED TO AND APPROVED BY THE ENGINEER PRIOR TO USE.
14. AT CONTRACTOR'S OPTION, SIDES OF KEY MAY BE VERTICAL. MAINTAIN WIDTH SHOWN AT TOP OF KEY.
15. WHERE GUARDRAIL ATTACHMENT IS REQUIRED, USE BARRIER TRANSITION DETAIL. INCLUDE COSTS FOR TRANSITION AND THE FIVE 1" DIAM. HOLES, PROPERLY LOCATED FOR CONNECTING THE SPECIAL END SHOE IN THE PRICE BID FOR CONCRETE SIDE BARRIER, TYPE 6-S, 6-SA, 6-SB, OR 6-SC BASED ON STEM HEIGHT REQUIRED.
16. WHERE GUARDRAIL ATTACHMENT IS REQUIRED, RETAINED SOIL SHALL BE GRADED SO AS TO EXPOSE THE GUARDRAIL ATTACHMENT HARDWARE ON THE BACK OF THE BARRIER TRANSITION.

DEPARTMENT OF TRANSPORTATION
STATE OF GEORGIA

STANDARD

CONCRETE SIDE BARRIER TYPES 6-S, 6-SA, 6-SB AND 6-SC

NO SCALE — MAY 2020

BY	DATE	REVISION
DES. CEW		
DRW. DDF		
CHK. DDF		
REV. WMD/BAS		

(SUBMITTED) N Christopher Rudd — STATE DESIGN POLICY ENGINEER

(APPROVED) Margaret B Pitts — CHIEF ENGINEER

NUMBER 4949C

STATE	PROJECT NUMBER	SHEET NO.	TOTAL SHEETS
GA.			

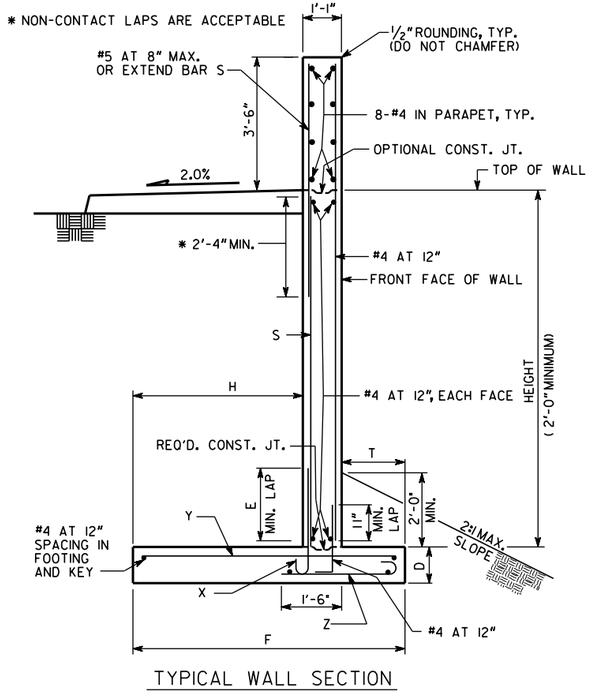

TYPICAL WALL SECTION

MAX. HEIGHT	WALL DIMENSIONS					REINFORCEMENT				Δ (INCHES)	MAX. FACTORED BEARING PRESSURE	TYPE
	D	E	F	H	T	S	X	Y	Z			
6'	1'-0"	2'-4"	6'-10"	4'-9"	1'-0"	#5 AT 8"	#5 AT 8"	#4 AT 8"	#4 AT 12"	0"	2.3 KSF	P1
8'	1'-0"	2'-4"	7'-3"	5'-2"	1'-0"	#5 AT 8"	#5 AT 8"	#5 AT 8"	#4 AT 12"	1/8"	2.6 KSF	P2
10'	1'-3"	2'-4"	8'-6"	6'-5"	1'-0"	#5 AT 7"	#5 AT 7"	#5 AT 7"	#4 AT 12"	1/4"	2.9 KSF	
12'	1'-3"	2'-9"	10'-0"	7'-8"	1'-3"	#6 AT 7"	#6 AT 7"	#6 AT 7"	#4 AT 12"	7/16"	3.2 KSF	P3
14'	1'-3"	3'-2"	11'-7"	8'-6"	2'-0"	#7 AT 6"	#7 AT 6"	#7 AT 6"	#4 AT 12"	11/16"	3.3 KSF	

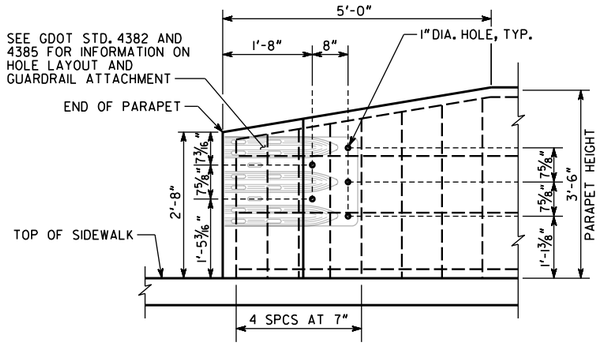

END OF PARAPET
GUARDRAIL ATTACHMENT

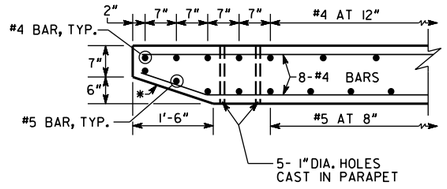

GUARDRAIL ATTACHMENT REINFORCING

* CHAMFER EXTENDS TO JOINT AT THE TOP OF SIDEWALK

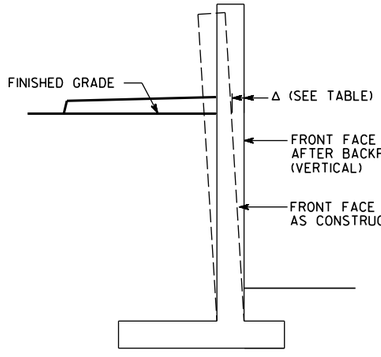

WALL BATTER DETAIL

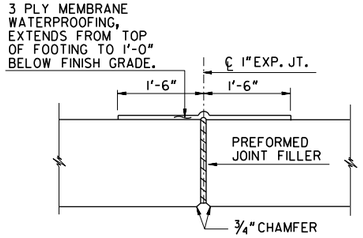

DETAIL OF EXPANSION JOINT

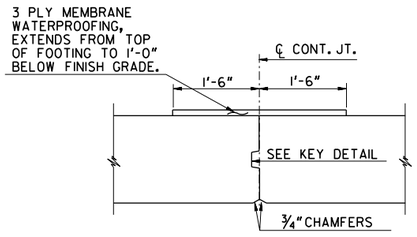

DETAIL OF CONTRACTION JOINT

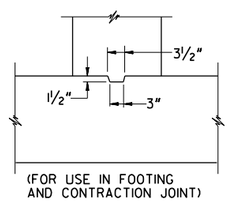

(FOR USE IN FOOTING AND CONTRACTION JOINT)
SHEAR KEY DETAIL

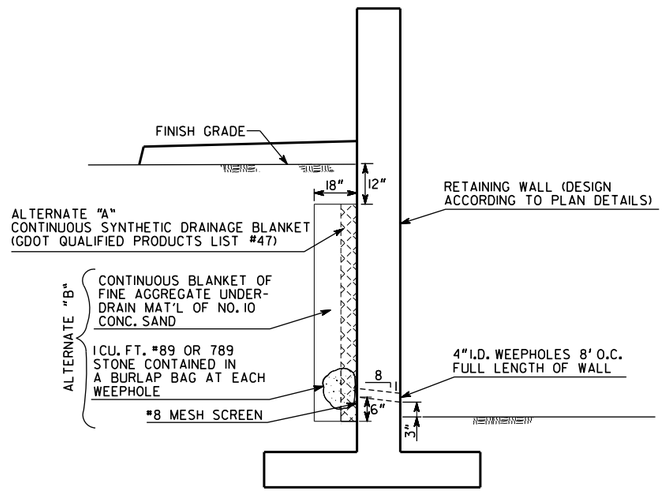

DRAINAGE DETAILS

GENERAL NOTES:

1. SPECIFICATIONS: GEORGIA STANDARD, CURRENT EDITION, AND SUPPLEMENTS THERETO.
2. CONCRETE SHALL BE CLASS "A". REINFORCING STEEL SHALL BE GRADE 60.
3. DRAINAGE DETAIL ALTERNATES A OR B, PER THE DETAIL ON THIS SHEET, ARE REQUIRED FOR TYPE P1, P2, AND P3 RETAINING WALLS. INCLUDE COSTS OF MATERIALS AND WORK IN PRICE BID FOR CLASS A CONCRETE, (TYPE) RETAINING WALL.
4. MAINTAIN 2" COVER ON ALL REINFORCING IN STEM AND PARAPET AND 3" COVER IN FOOTING. USE OF FORMLINERS PER THE CONTRACT WILL REQUIRE OVERALL STEM AND PARAPET WIDTHS TO BE INCREASED TO MAINTAIN COVER.
5. EXPOSED CONCRETE SURFACES SHALL RECEIVE A TYPE III FINISH UNLESS A FORMLINER IS REQUIRED PER THE CONTRACT.
6. APPLY A GRAFFITI PROOF COATING AS PER SECTION 838 TO ALL EXPOSED CONCRETE SURFACES.
7. PARAPET WALLS OVER 20'-0" IN LENGTH SHALL HAVE CONTRACTION JOINTS SPACED AT A MAXIMUM OF 20'-0". CONTRACTION JOINTS SHALL EXTEND THROUGH THE PARAPET, AND STEM. PARAPET WALLS OVER 80'-0" IN LENGTH SHALL HAVE EXPANSION JOINTS SPACED UNIFORMLY AT A MAXIMUM SPACING OF 80'-0" WITH 1" PREFORMED JOINT FILLER EXTENDING THROUGH PARAPET, STEM, AND FOOTING AT EACH EXPANSION JOINT. GALVANIZED 10d NAILS SHALL BE USED TO INSTALL EXPANSION MATERIAL.
8. PLACE AND TIE ALL REINFORCING STEEL IN ACCORDANCE WITH THE GEORGIA DOT SPECIFICATIONS. DO NOT WELD REINFORCING STEEL. LONGITUDINAL REINFORCING SHALL NOT EXTEND THROUGH EXPANSION JOINTS. STEM LONGITUDINAL REINFORCING SHALL NOT EXTEND THROUGH CONTRACTION JOINTS. LONGITUDINAL REINFORCING SHALL BE LAP SPLICED 2'-5". LONGITUDINAL FOOTING REINFORCING SHALL BE CONTINUOUS BETWEEN EXPANSION JOINTS. WHEN FOOTING SIZE CHANGES, LONGITUDINAL REINFORCING FOR SMALLER FOOTING SHALL EXTEND 1'-10" MINIMUM INTO LARGER FOOTING.
9. EXPANSION AND CONTRACTION JOINTS IN TYPE P1, P2, AND P3, RETAINING WALLS SHALL BE WATERPROOFED ON THE BACK SIDE. WATERPROOFING SHALL BE 3-PLY AND EXTEND FROM 1'-0" BELOW FINISH GRADE TO TOP OF FOOTING FOR 1'-6" MIN. EACH SIDE OF JOINT.
10. TYPE P1, P2, AND P3 RETAINING WALLS SHALL BE PAID FOR PER LINEAR FOOT AS CLASS A CONCRETE, (TYPE) RETAINING WALL. INCLUDE COSTS FOR WATERPROOFING, EXCAVATON, BACKFILLING, CONCRETE, REINFORCING STEEL AND ALL INCIDENTALS IN THE PRICE BID.
11. TYPE P1, P2, AND P3 RETAINING WALLS HAVE BEEN DESIGNED IN ACCORDANCE WITH THE AASHTO LRFD BRIDGE DESIGN SPECIFICATIONS, 8TH EDITION, 2017. THE PARAPETS INCLUDED IN THE DESIGN HAVE BEEN CERTIFIED BY THE DEPARTMENT TO SATISFY MASH TL-4 REQUIREMENTS FOR PROJECTS IN GEORGIA.
12. RETAINING WALLS DESIGNED FOR THE FOLLOWING SOIL PROPERTIES:

	FOUNDATION	BACKFILL
COHESION =	0 KSF	0 KSF
θ =	28°	28°
UNIT WT. =	0.120 KCF	0.120 KCF

13. WIRE FABRIC REINFORCING OR ALTERNATE REBAR SIZE/SPACING MAY BE USED IF DETAILS ARE SUBMITTED TO AND APPROVED BY THE ENGINEER PRIOR TO USE.
14. WHERE GUARDRAIL ATTACHMENT IS REQUIRED, PAYMENT FOR THE FIVE 1" DIAM. HOLES, PROPERLY LOCATED FOR CONNECTING THE SPECIAL END SHOE SHALL BE INCLUDED IN THE PRICE BID FOR CLASS A CONCRETE, (TYPE), RETAINING WALL BASED ON STEM HEIGHT REQUIRED. SHIFT PARAPET REINFORCING TO MISS BOLT HOLES AS REQUIRED.

DEPARTMENT OF TRANSPORTATION
STATE OF GEORGIA

STANDARD

PARAPET RETAINING WALL TYPES P1, P2, AND P3

NO SCALE — MAY 2020

DATE / REVISION / BY

DES. DDF
DRW. DDF
CHK. CEW
REV. WMD/BAS

(SUBMITTED) N Christopher Rudd
STATE DESIGN POLICY ENGINEER
(APPROVED) Margaret B Pickels
CHIEF ENGINEER

NUMBER 4949D

STATE	PROJECT NUMBER	SHEET NO.	TOTAL SHEETS
GA.			

OPTION ①

BARRIER DELINEATIONS, OFFSETS, & FLARE RATES

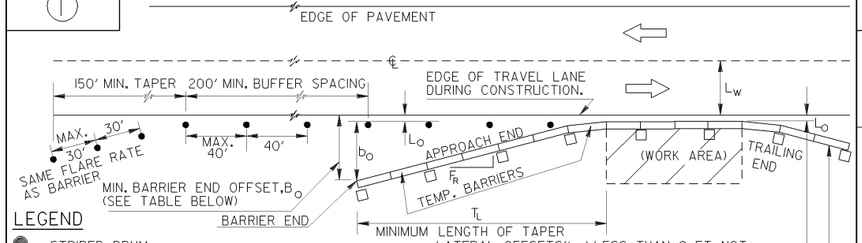

LEGEND

- ◉ - STRIPED DRUM
- □ - 10"×10" YELLOW PANELS WITH TYPE VII SHEETING- MAX. 40′ SPACING-LONGITUDINAL SECTION-MAX. 20′ SPACING IN TAPER
- T_L - MINIMUM TAPER LENGTH OF TEMPORARY BARRIER MEASURED FROM THE SECTION OF TEMPORARY BARRIER RUNNING PARALLEL WITH THE TRAVEL LANE TO THE BARRIER END IN FEET
- B_O - MINIMUM BARRIER END OFFSET DISTANCE IN FEET
- L_O - DESIRABLE MINIMUM LATERAL OFFSET DISTANCE FROM THE EDGE OF THE TRAVEL LANE TO THE TOE OF THE TEMPORARY BARRIER IN FEET
- b_O - MINIMUM BARRIER END OFFSET(B_O) MINUS THE DESIRABLE MINIMUM LATERAL OFFSET(L_O)
- F_R - MINIMUM FLARE RATE OF THE TEMPORARY BARRIER IN THE TAPER SECTION
- L_W - LANE WIDTH IN FEET

LATERAL OFFSETS(L_O) LESS THAN 2 FT. NOT PERMITTED, UNLESS APPROVED BY THE ENGINEER.

FOR A TWO-LANE TWO-WAY ROADWAY THE LANE WIDTH(L_W) PLUS THE LATERAL OFFSET(L_O) MUST BE GREATER THAN THE MINIMUM BARRIER END OFFSET(B_O), OR THE TRAILING END SHALL BE TAPERED SAME AS APPROACH.

IF $L_W + L_O$ IS LESS THAN 20 FT. FOR THE WORK AREA OR THE TRAILING END, THEN THE 10"×10" PANELS SHALL BE REFLECTORIZED ON BOTH SIDES.

MINIMUM LENGTH OF TAPER REQUIRED
$b_o = B_o - L_o$
$T_L = b_o \times F_R$

POSTED SPEED ON THE ROADWAY	DESIRABLE MINIMUM LATERAL OFFSET (FT.) L_O	FLARE RATE F_R	B_O MINIMUM OFFSET TO BARRIER END (FEET)
30-40 MPH	2	5:1	13
45-50 MPH	2	6:1	16
55 MPH	2	8:1	23
60-70 MPH	2	8:1	30

NOTE: INTERMEDIATE SPEEDS MAY UTILIZE AVERAGE VALUES.

OPTION ②

MINIMUM BARRIER ADVANCEMENT LENGTH
(WITH TEMPORARY GUARDRAIL ANCHOR)

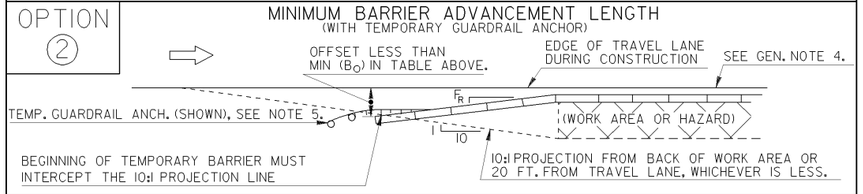

OPTION ③

PORTABLE ATTENUATOR TERMINAL

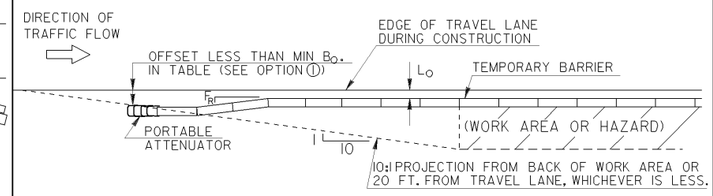

NOTES:
1. SEE SPECIFICATION SECTIONS 648 AND 150.
2. SEE CONSTRUCTION DETAIL G-11 FOR NON-GATING ATTENUATORS.
3. SEE GENERAL NOTE NO. 4.

OPTION ④

TEMPORARY BARRIER TRANSITION - CAST - IN - PLACE
(REQUIRED WHERE TEMPORARY BARRIER BUTTS AGAINST PERMANENT BARRIER)

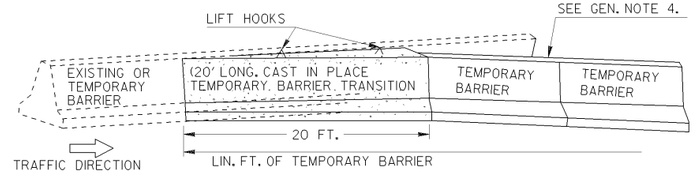

NOTES:
1. COVER PERMANENT BARRIER, PAVEMENT, & PRECAST SECTIONS WITH POLYETHYLENE AS A BOND BREAKER.
2. PLACE BARRIER SIDE FORMS AGAINST PERMANENT & TEMP. BARRIER TO FORM SMOOTH TRANSITION.
3. USE CLASS "A" CONCRETE. A TYPE I FINISH IS SUFFICIENT.
4. TRANSITION SHALL BE COMPLETED BEFORE TEMPORARY BARRIER IS EXPOSED TO ON-COMING TRAFFIC.
5. TRANSITION IS NOT REQ'D. AT TRAILING END OF ONEWAY TRAFFIC FLOW.
6. TRANSITION WILL BE PAID FOR AS TEMPORARY BARRIER. PAYMENT INCLUDES REUSE, REMOVE AND DISPOSAL. TEMPORARY MEDIAN TRANSITION WILL BE PROVIDED BY THE CONTRACTOR WITH PAYMENT MADE AT THE PRICE BID FOR BARRIER AS SPECIFIED IN THE PLANS.

END TREATMENT FOR BARRIER TERMINAL

WHERE BARRIER END OFFSETS REQUIRED IN OPTION ① CAN NOT BE OBTAINED THEN, A TEMPORARY GUARDRAIL ANCHORAGE AT THE BARRIER END WILL BE REQUIRED AS PER OPTION ②. IF INSTALLATION OF GUARDRAIL ANCHORAGE IS NOT PRACTICAL DUE TO LOCAL CONDITIONS, A TEMPORARY PORTABLE IMPACT ATTENUATOR SHOULD BE USED AT THE BARRIER END AS PER OPTION ③.

① = FIRST OPTION, MINIMUM OFFSET IS OBTAINED.
② = SECOND OPTION, TEMPORARY GUARDRAIL ANCHORAGE, AS SPECIFIED.
③ = THIRD OPTION, PORTABLE ATTENUATOR.
④ = FOURTH OPTION, TERMINATE WITH A CAST-IN-PLACE TRANSITION.
⑤ = FIFTH OPTION, CONNECT TO GUARDRAIL.

GENERAL NOTES:
1. BARRIERS SHALL BE PLACED SUCH THAT OPENINGS BETWEEN INDIVIDUAL SECTIONS SHALL BE KEPT TO A MAXIMUM. ALL JOINTS BETWEEN PRECAST SECTIONS SHALL BE CONNECTED AS REQUIRED BY GA. STANDARD 9961 AND/OR MANUFACTURERS RECOMMENDATIONS.
2. THE BARRIER IS NOT TO BE CONNECTED TO THE BRIDGE DECK BY CONNECTING PINS OR REBAR UNLESS AN APPROVED METHOD FOR CONNECTION IS REQUIRED.
3. PRECAST BARRIER SECTIONS SHALL CONFORM TO THE DIMENSIONAL REQUIREMENTS IN GA. STANDARD 9961 AND/OR MANUFACTURERS RECOMMENDATIONS.
4. TRAFFIC CONTROL NOT SHOWN ON THIS STANDARD SHALL BE IN ACCORDANCE WITH CURRENT EDITION OF SECTION 150, STANDARDS, CONSTRUCTION DETAILS AND/OR PLAN SHEETS. DRUMS, ETC. SHOWN FOR OPTION ① SHALL BE APPLICABLE FOR THE OTHER OPTIONS AS WELL. DRUMS SHALL BE PROVIDED IN ADVANCE OF TEMPORARY BARRIERS INSTALLATION AND SHALL BE IN PLACE BEFORE THE BARRIER IS INSTALLED AND REMOVED AFTER THE BARRIER IS REMOVED.
5. WHERE TEMPORARY GUARDRAIL ANCHORAGE IS SPECIFIED, THE FIRST BREAKAWAY SHALL BE 37′-6" MINIMUM IN ADVANCE OF BEGINNING THE TEMPORARY BARRIER INSTALLATION.
6. PAYMENT FOR TEMORARY GUARDRAIL ANCHORS INCLUDES END SHOE, CONNECTING BOLTS, NUTS AND WASHERS, ADDITIONAL POSTS AND OFFSETS BLOCKS, 25 FT. ADDITIONAL "W"-BEAM WITH THE DOUBLE NESTED SECTION PLUS STANDARD ANCHORAGE COMPONENTS. (TOTAL LENGTH=62′-6"(±) MIN.
7. UNACCEPTABLE OR NON-STANDARD END TREATMENT WILL NOT BE LEFT IN PLACE AFTER REMOVAL OF THE TEMPORARY BARRIER, ALL GUARDRAIL AND ALL ANCHORAGES LEFT IN PLACE WILL BE TREATED AS NECESSARY TO CONFORM WITH CURRENT STANDARDS IMMEDIATELY AFTER REMOVAL OF THE TEMPORARY BARRIER.

OPTION ⑤

TEMPORARY CONCRETE BARRIER/GUARDRAIL CONNECTIONS & JUNCTIONS

NOTE:
PAYMENT FOR TEMPORARY CONCRETE BARRIER WILL INCLUDE ALL SPECIAL END SHOES, BOLTS, BOLT HOLES, NUTS, WASHERS, ADDITIONAL GUARDRAIL POSTS, ETC., NECESSARY FOR THE CONNECTIONS, AS SHOWN, WHEN REQUIRED.

ALL SPECIAL END SHOES WILL BE CONNECTED TO CONCRETE BARRIER WITH FOUR ⅞" DIA. BOLTS (A.S.T.M. A-307). LOCATION OF THE BOLTS MAY BE VARIED AT THE DIRECTION OF THE ENGINEER. REMOVABLE TYPE ⅞" DIA. CONCRETE ANCHOR BOLTS, INSTALLED ACCORDING TO MANUFACTURER'S RECOMMENDATIONS, MAY BE USED INSTEAD OF THE BOLTS CONNECTION SYSTEM SHOWN. ANY BOLTS BROKEN OR IMPROPERLY INSTALLED WILL BE CAUSE FOR REJECTION.

⅞" THREADED RODS WITH NUTS AND WASHERS MAY BE USED IN LIEU OF ⅞" BOLTS.

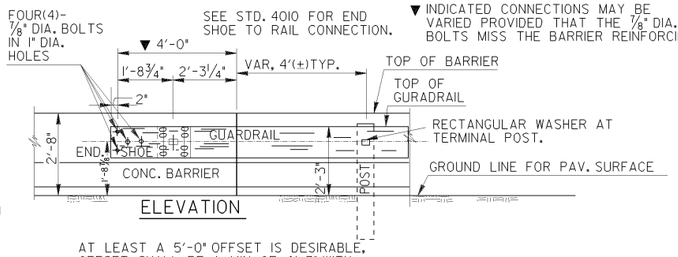

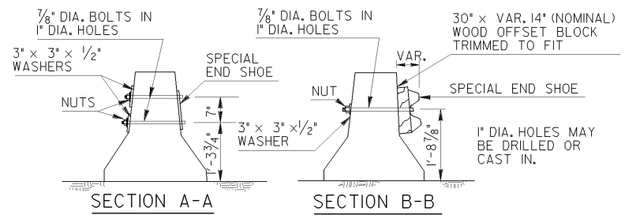

AT LEAST A 5′-0" OFFSET IS DESIRABLE. OFFSET SHALL BE A MIN. OF 4′-3" WITH 6′-3" C. TO C. POST SPACING. WHEN OFFSET IS BETWEEN 4′-3" AND 3′ MIN. POST SPACING SHALL BE 3′-1½" C. TO C. FOR 7 CONSECUTIVE SPACING IN ADVANCE OF THE BARRIER.

GUARDRAIL REQ'D. ON TRAILING END ONLY, WHERE CONDITION WARRANTS.

GUARDRAIL ANCHORAGE REQUIRED (SEE GENERAL NOTE 7).

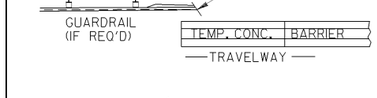

PLAN
ONE-WAY TRAFFIC TRAILING END

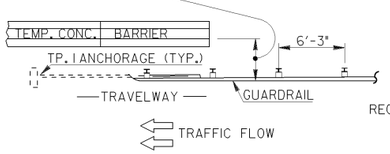

PLAN
ONE-WAY TRAFFIC APPROACH END

GUARDRAIL REQ'D. ON TRAILING END ONLY WHERE CONDITIONS WARRANT.

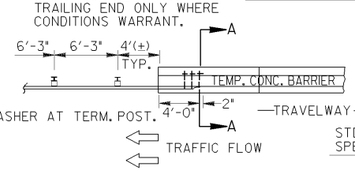

PLAN
ONE-WAY TRAFFIC TRAILING END

FOR BARRIER SECTIONS BEHIND GUARDRAIL, THE FLARE RATE(F_R) MAY BE ALTERED, AS NEEDED, TO PROVIDE THE 4′ OR 5′ OFFSET SHOWN HERE

NUMBER OF BARRIER SECTIONS: ALIGNMENT OF BARRIER AND GUARDRAIL IS VARIED TO PROVIDE OFFSET SHOWN OR ADDITIONAL GUARDRAIL POSTS ARE REQUIRED.

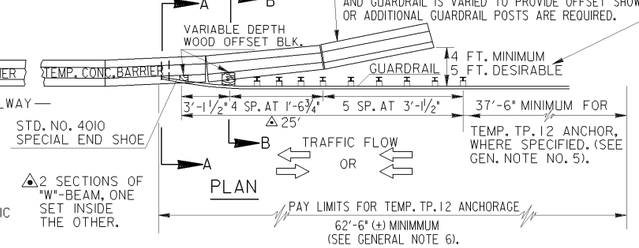

PLAN

DATE	REVISION	BY
2-1-01	O.M. SH. SPEC.	RMU
5-10-07	TYPE AND GENERAL NOTES. REV. REFLECTIVE SHEETING REVISED ALL OPTIONS AND	GLO

DEPARTMENT OF TRANSPORTATION
STATE OF GEORGIA

STANDARD
TEMPORARY BARRIER (END TREATMENT OPTIONS)

NO SCALE — REV. & REDR. MAY, 1999

DES. ____ DRW. ____ TRA. ____ CHK. ____

(SUBMITTED) STATE ROAD & AIRPORT DESIGN ENGINEER

(APPROVED) CHIEF ENGINEER

NUMBER 4960

STATE	PROJECT NUMBER	SHEET NO.	TOTAL SHEETS
GA.			

PRECAST CONCRETE BARRIER DETAILS

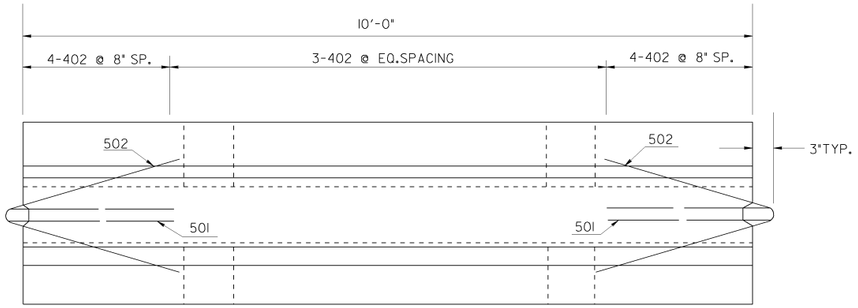

PLAN

NOTE:
BARRIER SECTIONS SHALL BE CONNECTED TOGETHER WITH THE 1¼" DIA. A-307 DOUBLE HEX CONNECTION BOLT. THE BOTTOM NUT & WASHER SHALL BE MAINTAINED BY THE CONTRACTOR FOR THE DURATION OF THE BARRIER INSTALLATION.

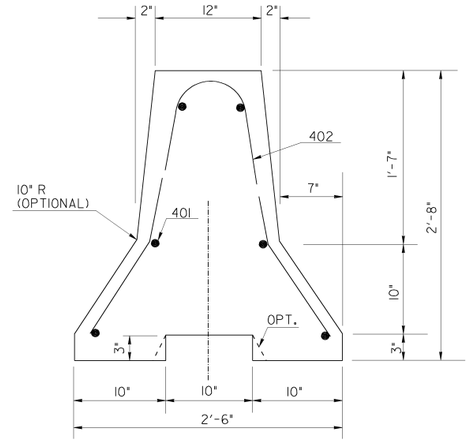

END ELEVATION

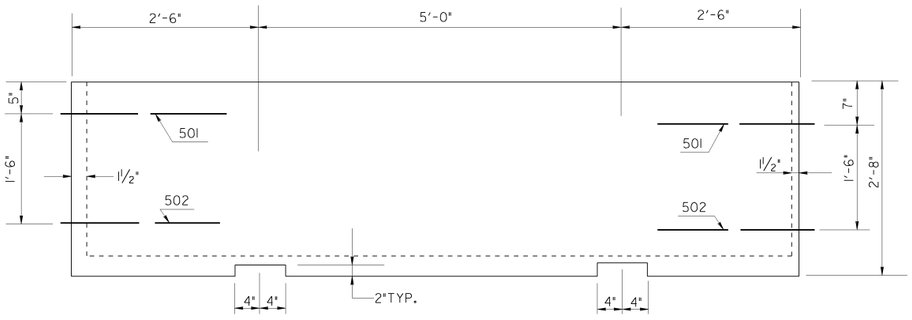

SIDE VIEW

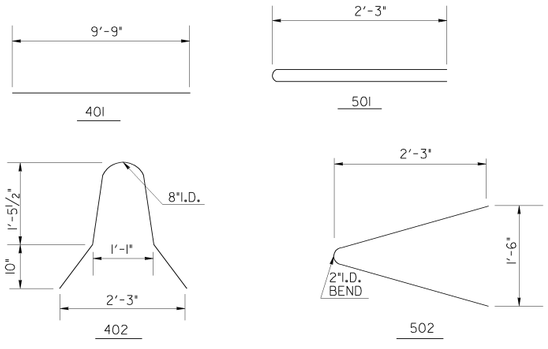

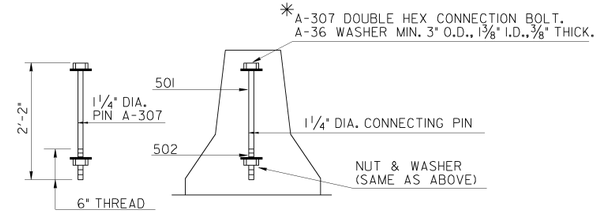

PIN CONNECTION

✳AN ALTERNATE CONNECTING PIN WITH A FUSED NUT ON THE TOP THREADED PORTION AND NUT AND WASHER AS SPECIFIED ON THE BOTTOM MAY ALSO BE USED.

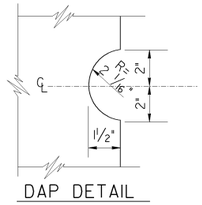

DAP DETAIL

GENERAL NOTES:

1-MATERIALS: CLASS 'A' CONCRETE AND 40 STEEL.

2-SEE GA. SPECIFICATIONS FOR BASIS OF PAYMENT AND METHOD NO.___.

3-REINFORCEMENT, HAVING AN AREA AT LEAST EQUAL TO REBARS SHOWN, MAY BE USED AS AN ALTERNATE.

4-BARRIERS SHALL BE PLACED SUCH THAT OPENINGS BETWEEN INDIVIDUAL SECTIONS SHALL BE KEPT TO A MAXIMUM.

G.L.O.	REVISION	BY	DATE
	REV. CONNECTION WASHER AND REV. GEN. NOTE NO. 4.	R.M.U.	9-8-06
	REV. REBAR & PIN CONN.		5-2-01
	COTTER PIN REQUIREMENT		5-10-96

DEPARTMENT OF TRANSPORTATION
STATE OF GEORGIA

STANDARD
DETAILS OF PRECAST TEMPORARY BARRIERS

NO SCALE — AUG., 1995

DES. ___ DRW. ___ TRA. ___ CHK. ___

(SUBMITTED) STATE ROAD & AIRPORT DESIGN ENGR.

(APPROVED) CHIEF ENGINEER

NUMBER 4961

GDOT Georgia Department of Transportation | P. I. No.

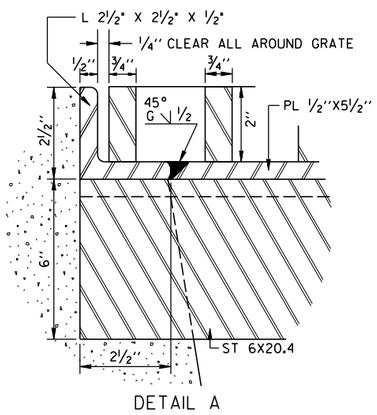

DETAIL A

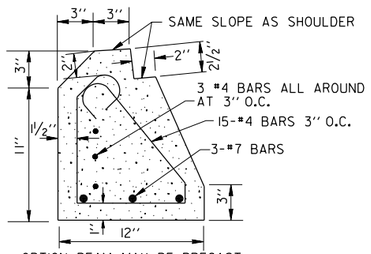

OPTION: BEAM MAY BE PRECAST

DETAIL B

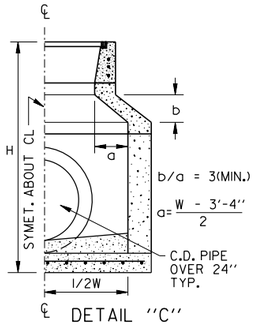

DETAIL "C"

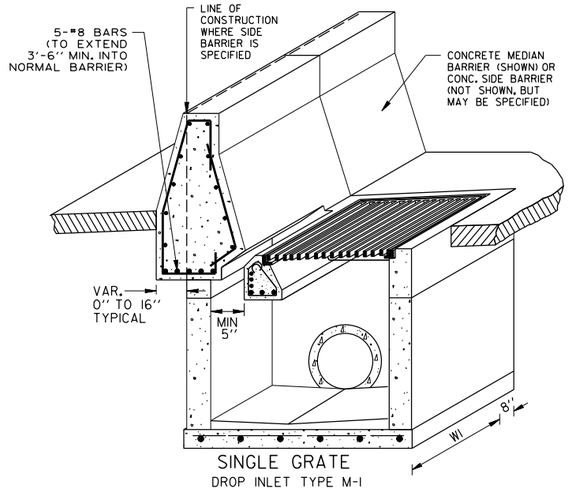

SINGLE GRATE
DROP INLET TYPE M-1

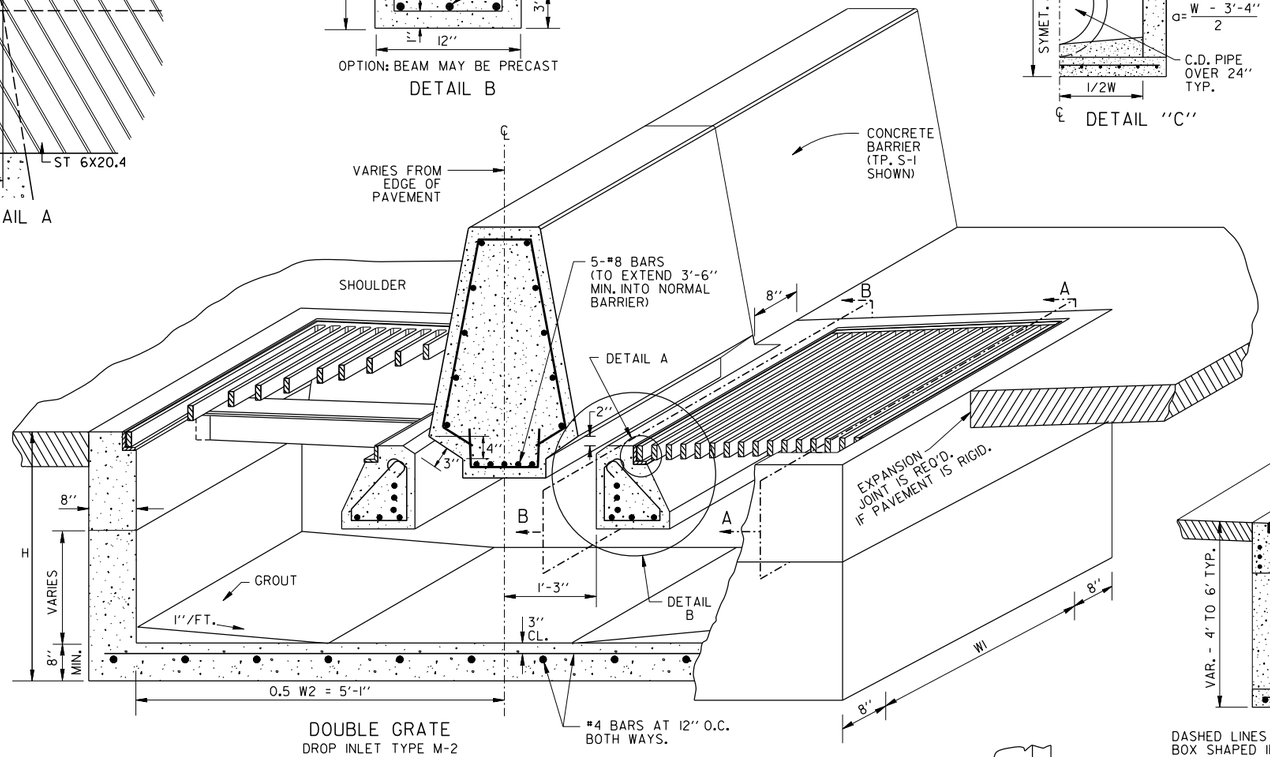

DOUBLE GRATE
DROP INLET TYPE M-2

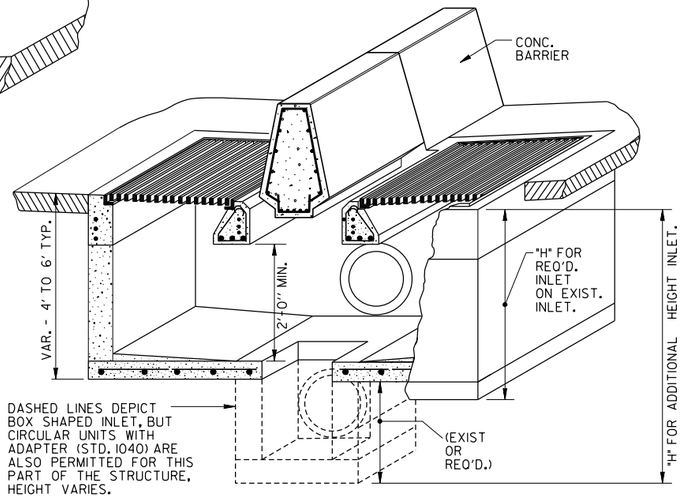

DROP INLET WITH ADDITIONAL HEIGHT OR OVER EXISTING INLET

(TYPE M-2 INLET SHOWN; CONSTRUCTION SIMILAR FOR TYPE M-1)

GENERAL NOTES

1. SPECIFICATION: GEORGIA STANDARD CURRENT EDITION, AND SUPPLEMENTS THERETO.
2. STANDARD 5001-M INLET GRATES ARE FOR USE ONLY ON LIMITED ACCESS TYPE FACILITIES, WHERE BICYCLES AND SCOOTERS ARE PROHIBITED.
3. INVERTS AND PIPES SHOWN ARE ILLUSTRATIVE. SEE PLANS FOR SPECIFICS. INVERTS SHALL BE FORMED WITH GROUT OR CONCRETE AS SHOWN IN THE PLANS OR AS DIRECTED BY THE ENGINEER.
4. FOR CONCRETE BARRIER DETAILS NOT SHOWN, SEE SEPARATE STANDARDS OR PLAN DETAILS. IF THE ROADWAY BARRIER HAS REINFORCING STEEL, THE REINFORCEMENT SHALL BE CONTINUED IN BARRIER SECTION ACROSS THE INLET. ADDITIONAL REINFORCING REQUIRED WHERE SHOWN.
5. FOR USE ONLY ADJACENT TO CONCRETE BARRIER; IN SHOULDERS GREATER THAN 4'-6" WIDE. FOR NARROWER SHOULDERS, 5001-N SHALL BE USED.
6. IF THE BASE OF THE INLET STRUCTURE CONFLICTS WITH AN EXISTING BARRIER (OR WALL) FOOTING, THE FOOTING MAY BE NOTCHED OUT AS SMALL AS POSSIBLE TO FIT THE STRUCTURE. IF AN EXISTING FOOTING OR TRAVEL LANES PREVENT NORMAL LOCATION OF LONGITUDINAL PIPES, AND IF THE OFFICES OF HYDRAULICS AND BRIDGES APPROVE FOR DRAINAGE AND STRUCTURAL INTEGRITY RESPECTIVELY, A CLASS 5 LONGITUDINAL PIPE MAY BE LOCATED UNDER A NEW RECONSTRUCTED BARRIER (OR WALL) FOR THE CONFLICTING LENGTH WITH THE USE OF A DROP STRUCTURE.
7. DRAINAGE STRUCTURES SHALL NOT BE PLACED WITHIN ANY TRAVEL LANES.
8. ALL COLLAR AND BOX REINFORCEMENT SHALL HAVE MINIMUM 2" CLEARANCES FROM ALL EXTERIOR AND INTERIOR FACES.
9. ALL MODIFIED BARRIER REINFORCEMENT SHALL HAVE MINIMUM 3" CLEARANCES FROM ALL FACES.
10. ALL MODIFIED CONCRETE BARRIER WILL BE PAID FOR UNDER THE SAME ITEM AS THE EXISTING OR PROPOSED CONCRETE BARRIER TYPE IT REPLACES.

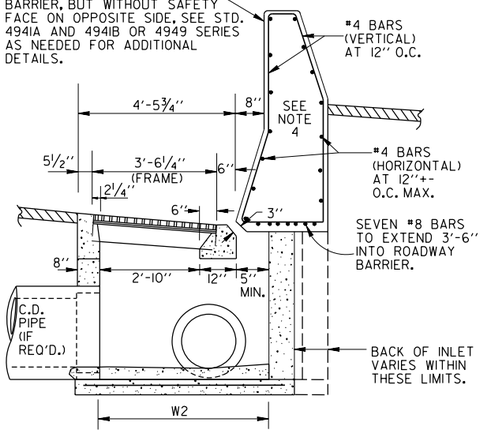

DROP INLET TYPE M-1 WITH TYPE 6-S OR TYPE S-2, S-3, OR S-3A/S-3B CONCRETE BARRIER (TYP.)

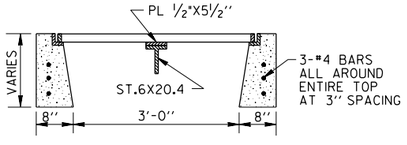

SECTION A-A

S6 X 12.5 "I" BEAM MAY BE SUBSTITUTED FOR THE ST. 6X20.4 "T" BEAM SHOWN.

NOTE:
SEE DETAIL "C" FOR C.D. OVER 24"

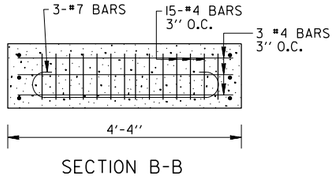

SECTION B-B

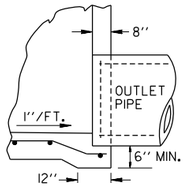

ALTERNATE TO INVERT

MINIMUM DIMENSIONS: INLET WITH CROSS DRAIN PIPE				
PIPE SIZE	WI	a	℄	MIN. H
15"	3'-0"	—	—	3'-10"
18"	3'-0"	—	—	4'-2"
24"	3'-0"	—	—	4'-9"
30"	3'-6"	1"	3"	5'-4"
36"	4'-0"	4"	1'-0"	6'-4"
42"	4'-6"	7"	1'-9"	7'-8"
48"	5'-0"	10"	2'-6"	9'-0"
54"	5'-6"	1'-1"	3'-3"	10'-4"
60"	6'-0"	1'-4"	4'-0"	11'-8"

MINIMUM DIMENSIONS: INLET WITH LONGITUDINAL PIPE			
PIPE SIZE	W2		MIN. H
	TYPE M-1	TYPE M-2	
15"	4'-3"	10'-2"	3'-10"
18"	4'-3"	10'-2"	4'-2"
24"	4'-3"	10'-2"	4'-9"
30"	4'-3"	10'-2"	5'-4"
36"	4'-3"	10'-2"	5'-10"
42"	4'-10"	10'-2"	6'-6"
48"	5'-8"	10'-2"	7'-1"

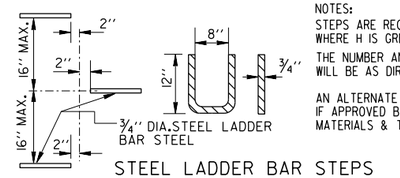

STEEL LADDER BAR STEPS

NOTES:
STEPS ARE REQ'D. ON ALL STRUCTURES WHERE H IS GREATER THAN 4'-0".

THE NUMBER AND LOCATION OF STEPS WILL BE AS DIRECTED BY THE ENGINEER

AN ALTERNATE STEP MAY BE SUBSTITUTED, IF APPROVED BY THE GA. D.O.T. OFFICE OF MATERIALS & TESTING.

DATE	REVISION	BY
07-01-25	REV M-1 D.I. DET DIM TO 8"	J.A.H.R.
07-01-23	REVISED GEN. NOTE NO. 8	J.A.H.R.
07-01-23	SINGLE SLOPE BARRIER	J.A.H.R.
	REMOVED BRICK BOXES	
	REMOVED DUPLICATE GRATE	
6-14-10	REV. GEN. NOTES NO. 2, 5-10	G.L.O.
6-30-98	REV. GEN. NOTES NO. 5 & 6	G.J.P.
8-15-97	REDRAWN	R.M.U.
9-11-94	ADD SPECIAL NOTE	R.M.U.
	ADD NOTE 6	R.M.U.

DEPARTMENT OF TRANSPORTATION
STATE OF GEORGIA

STANDARD
DROP INLET TYPES M-1 & M-2
ADJACENT TO CONCRETE MEDIAN BARRIER OR SIDE BARRIER

NOT TO SCALE — MAY 1996

DES. W.W.S. (SUBMITTED) Daniel C. Ross, STATE DESIGN POLICY ENGINEER
DRW. L.G.S.
TRA. R.M.U.
CHK. R.K.C. (APPROVED) Margaret B. Pinkle, CHIEF ENGINEER

NUMBER 5001-M

SHEET 1 OF 2

GDOT Georgia Department of Transportation | P. I. No.

FRAME

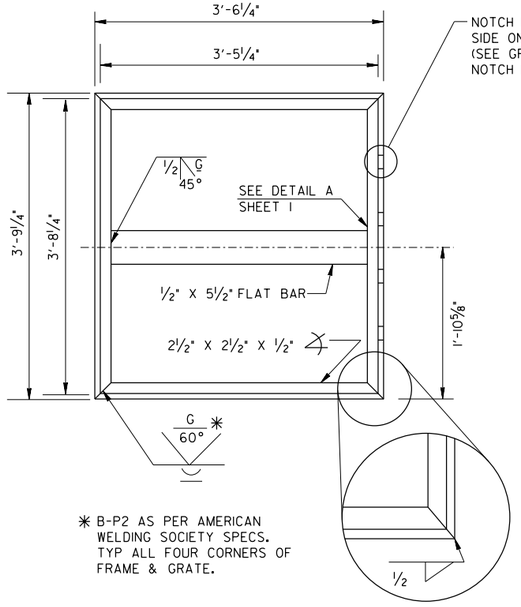

* B-P2 AS PER AMERICAN WELDING SOCIETY SPECS. TYP ALL FOUR CORNERS OF FRAME & GRATE.

GRATE

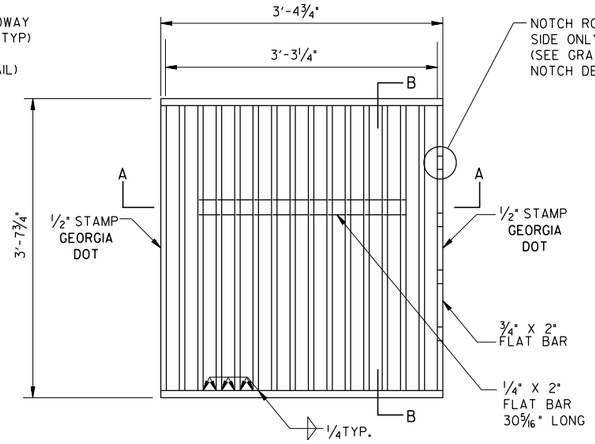

SECTION B-B

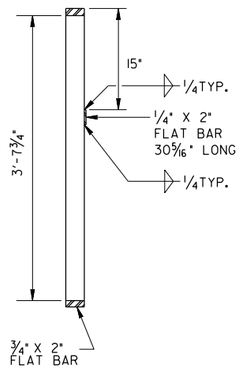

SECTION A-A

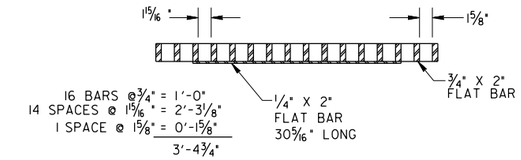

16 BARS @ ¾" = 1'-0"
14 SPACES @ 1⅝" = 2'-3⅛"
1 SPACE @ 1⅝" = 0'-1⅝"
3'-4¾"

FRAME NOTCH DETAIL

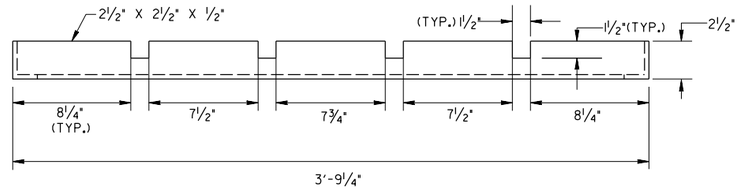

GRATE NOTCH DETAIL

¾" X 2" FLAT BAR (ONE REQ'D)

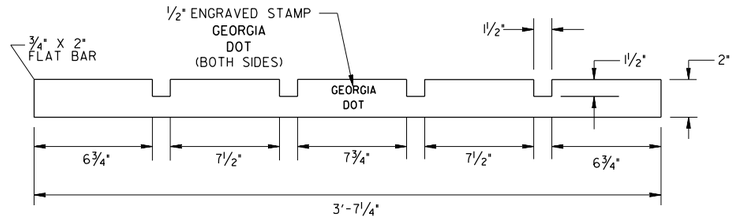

GENERAL NOTES:

1. SPECIFICATION: GEORGIA STANDARD CURRENT EDITION, AND SUPPLEMENTS THERETO.
2. STANDARD 5001-M INLET GRATES ARE FOR USE ONLY ON LIMITED ACCESS TYPE FACILITIES, WHERE BICYCLES AND SCOOTERS ARE PROHIBITED.
3. NO SEPARATE MEASUREMENT OR PAYMENT SHALL BE MADE FOR THE FABRICATION AND INSTALLATION OF THE SECURITY CHAIN.
4. LOOP CHAIN AROUND FIRST LADDER STEP IF ST6X20.4 "T" BEAM IS NOT PRESENT.
5. IF NEITHER ST6X20.4 "T" BEAM OR STEP IS AVAILABLE, THEN SECURE CHAIN TO INLET WITH EYE BOLT.
6. WELD NUT TO THE BOLT, IF CHAIN IS SECURED TO INLET OR GRATE WITH BOLT AND NUT.
7. BOTH THE GRATE AND THE FRAME DETAILED IN THIS STANDARD SHALL BE EITHER ASTM A-36 STEEL (HOT-DIPPED GALVANIZED, MEETING ASTM SPECIFICATION A-123), OR ASTM A-588 STEEL (NOT GALVANIZED). FOR A-36 STEEL, AFTER FABRICATION, DRILL A ¼" DIA HOLE IN ONE FRAME CORNER TO PREVENT BUILD-UP OF GALVANIZING MATERIAL.
8. ALTERNATIVE GRATES, WHICH HAVE A GDOT ACCEPTANCE LETTER MAY BE USED IN LIEU OF THE GRATE DETAILED ON THIS STANDARD.
9. DRAINAGE STRUCTURE SHALL NOT BE PLACED WITHIN ANY TRAVEL LANES.

SECURITY CHAIN

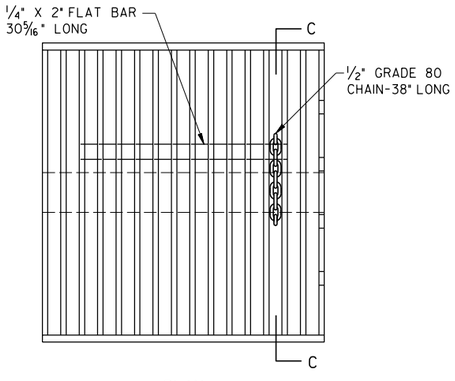

PLAN

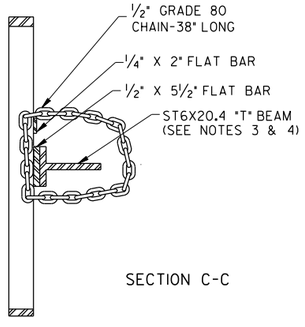

SECTION C-C

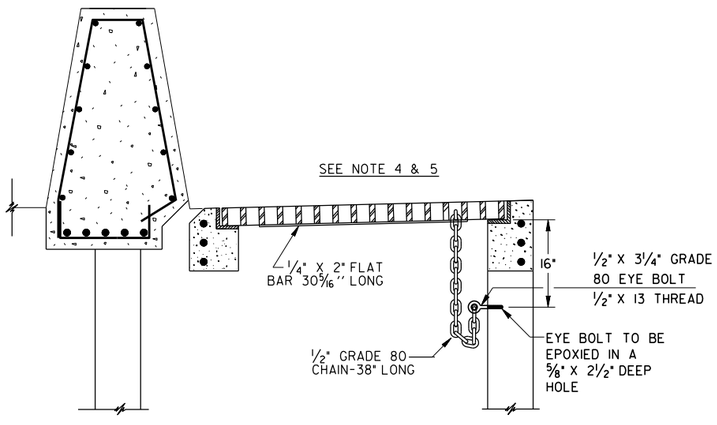

CHAIN LOOP CONNECTION DETAILS

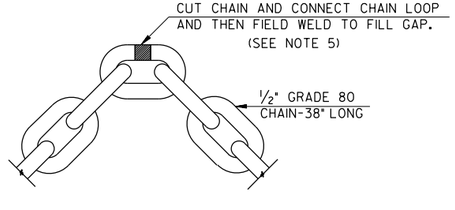

CHAIN LOOP CONNECTION DETAIL

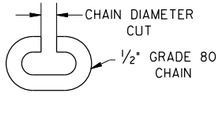

CUT CHAIN LINK DETAIL

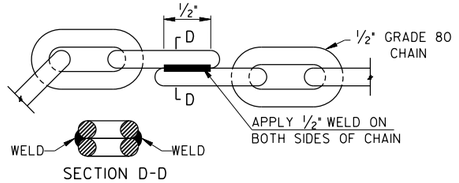

SECTION D-D

ALTERNATE WELDED CONNECTION DETAIL

DATE	REVISION	BY
07-01-25	REVISED GENERAL NOTE 8	J.A.H.R.
07-01-23	REVISED GENERAL NOTE 8	J.A.H.R.
	SINGLE SLOPE BARRIER	
	ADDED NOTCHES TO FRAME	
2-18-14	REV. CHAIN GRADE & DETAILS	B.J.O.
	ADDED GEN. NOTES 3, 4, & 5	
6-14-10	ADDED CHAIN DETAILS	G.L.O.
6-30-98	REDRAWN	G.J.P.
8-15-97	ADD SPECIAL NOTE	R.M.U.
9-11-94	ADD NOTE 6	R.M.U.

DEPARTMENT OF TRANSPORTATION
STATE OF GEORGIA

STANDARD
DROP INLET TYPES M-1 & M-2
FRAME/GRATE AND SECURITY CHAIN DETAILS

NOT TO SCALE — MAY 1996

DES. W.W.S.
DRW. L.G.S.
TRA. R.M.U.
CHK. B.K.C.

(SUBMITTED) Daniel G. Pass — STATE DESIGN POLICY ENGINEER
(APPROVED) Margaret B. Pinkle — CHIEF ENGINEER

NUMBER 5001-M

GDOT Georgia Department of Transportation | P. I. No.

LEVEL GRADE SINGLE INLET

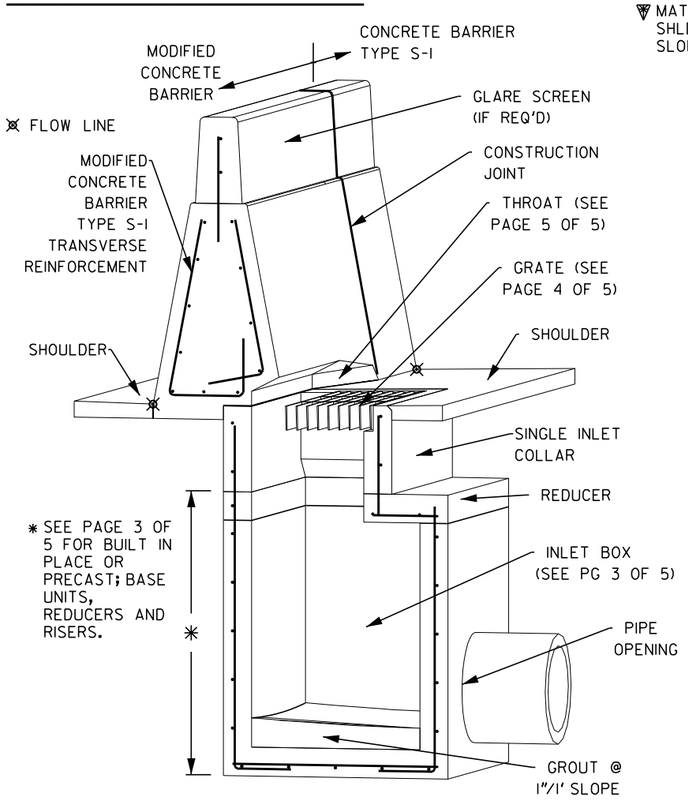

MATCH SHLDR. SLOPE

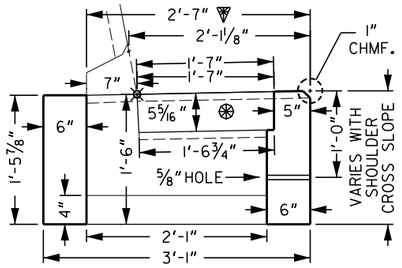

SECTION A-A

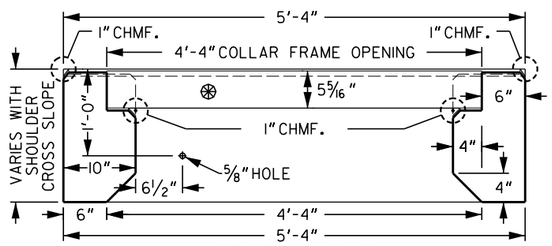

SECTION B-B

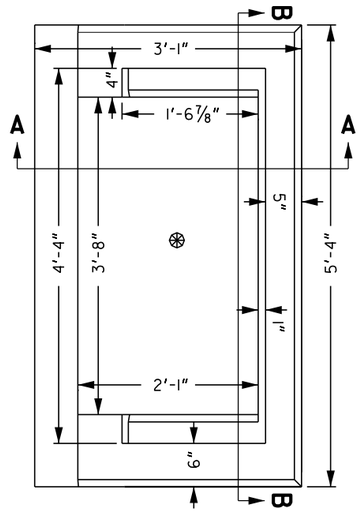

INLET COLLAR PLAN VIEW

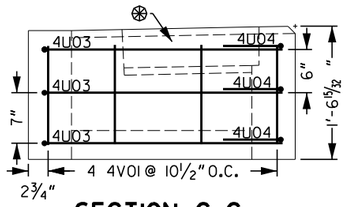

SECTION C-C

GRATE NOT SHOWN FOR CLARITY.

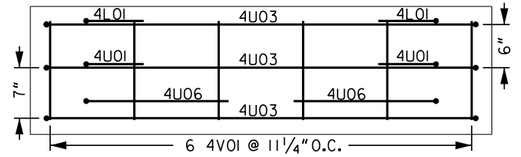

SECTION E-E

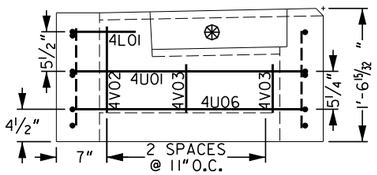

SECTION D-D

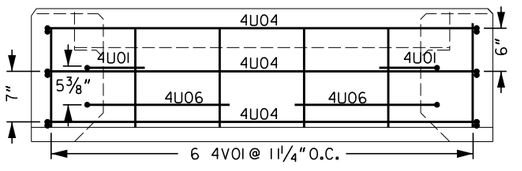

SECTION F-F

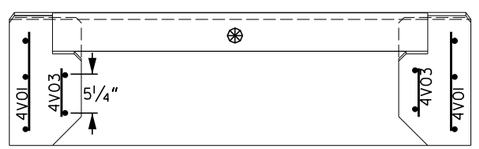

SECTION G-G

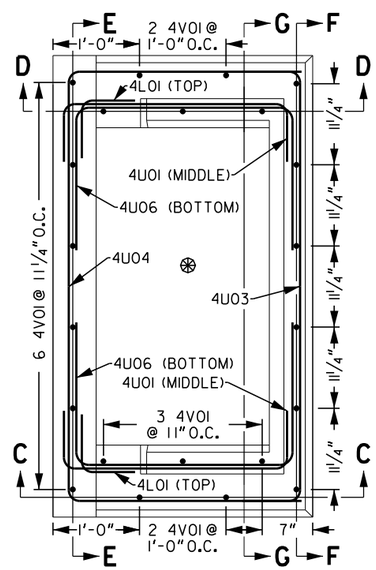

INLET COLLAR PLAN VIEW REINFORCEMENT

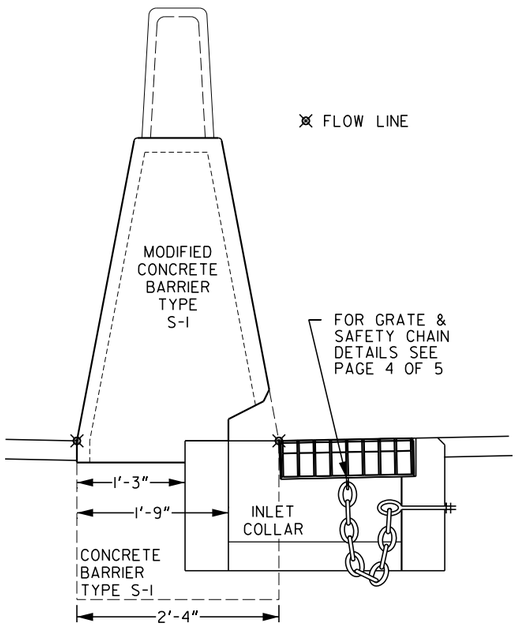

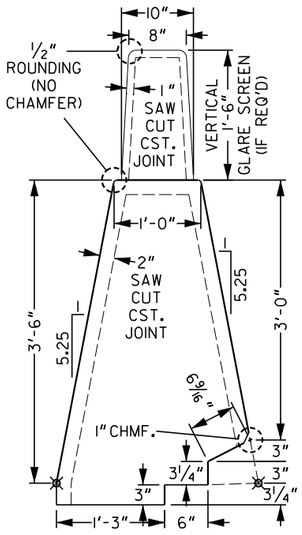

MODIFIED CONCRETE BARRIER DIMENSION DETAIL

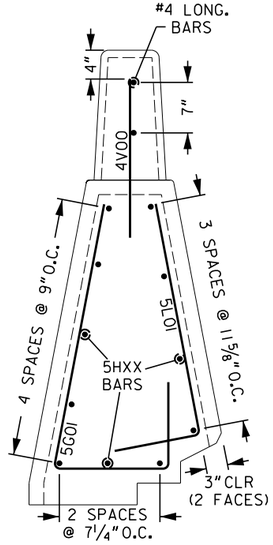

MODIFIED CONCRETE BARRIER TRANSVERSE REINFORCEMENT DETAIL (@ 6" O.C.)

	DATE	DEPARTMENT OF TRANSPORTATION STATE OF GEORGIA	
	REVISION	STANDARD NARROW MEDIAN INLET TYPE 500I-N-I LEVEL GRADE SINGLE INLET (ADJACENT TO CONCRETE BARRIER TYPE S-I)	
		NO SCALE	APRIL 2020
BY	DES. JAHR DRW. JAHR TRA. JAHR CHK. ____	(SUBMITTED) R Christopher Rudd STATE DESIGN POLICY ENGR. (APPROVED) Margaret B Pinkle CHIEF ENGINEER	NUMBER 500IN 1A OF 5

GDOT Georgia Department of Transportation | P. I. No.

LEVEL GRADE DOUBLE INLET

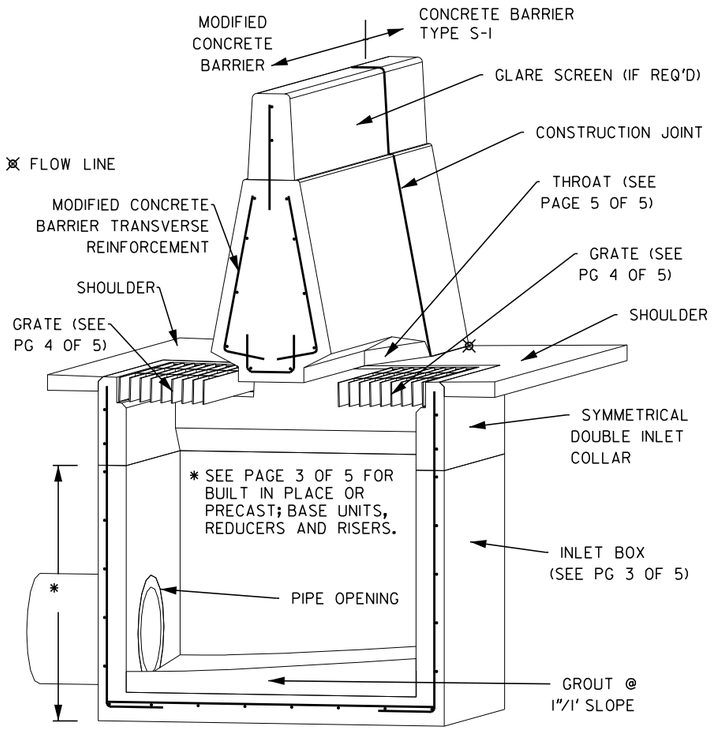

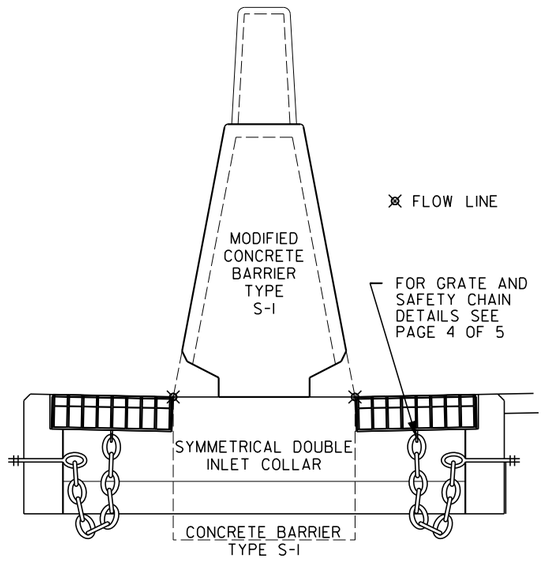

GRATE NOT SHOWN FOR CLARITY

MATCH SHOULDER SLOPE

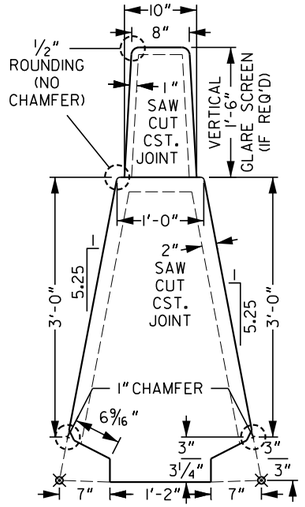

MODIFIED CONCRETE BARRIER DETAIL

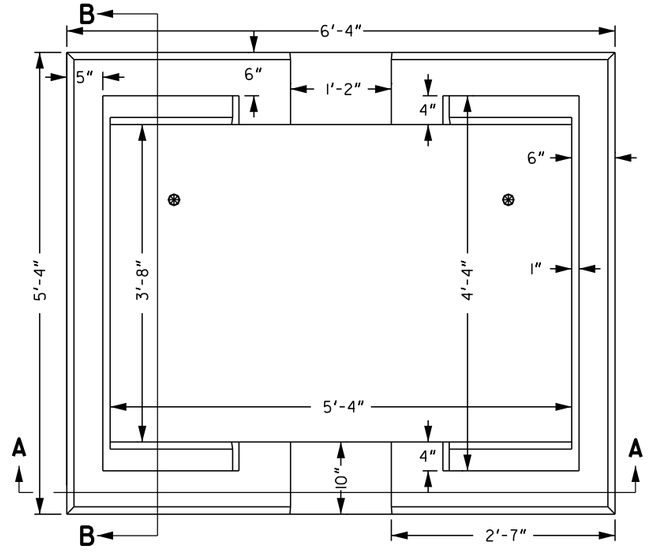

INLET COLLAR PLAN VIEW

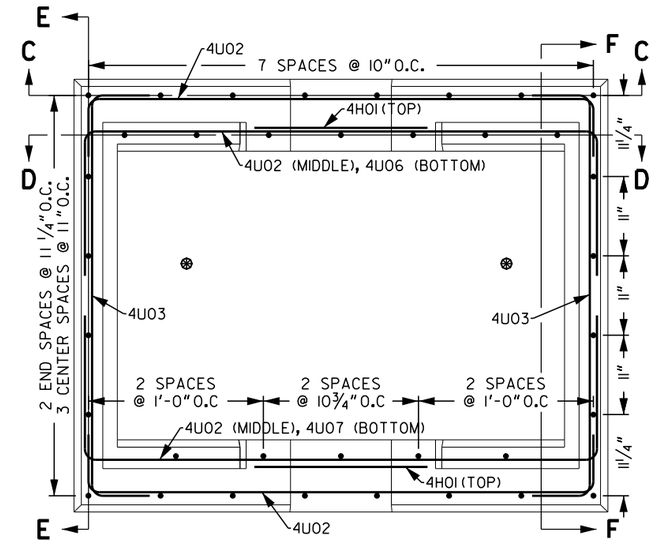

INLET COLLAR REINFORCEMENT DETAIL PLAN VIEW

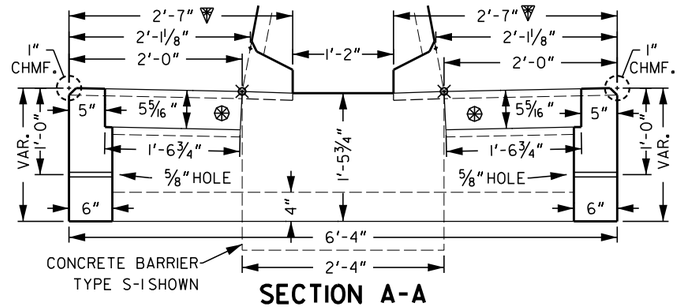

SECTION A-A

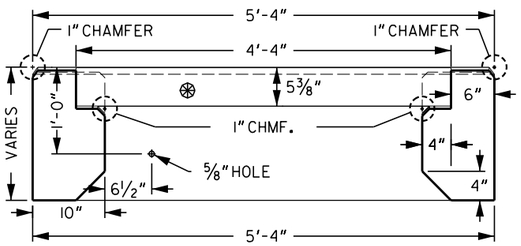

SECTION B-B

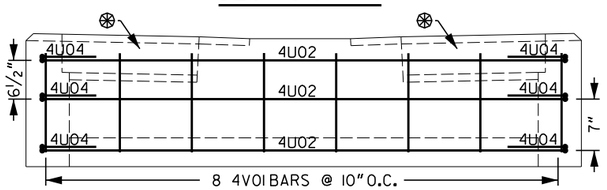

SECTION C-C

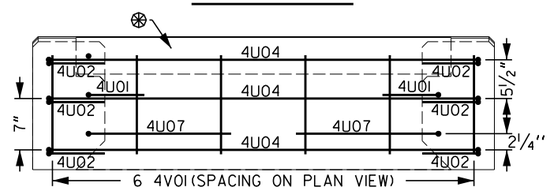

SECTION E-E

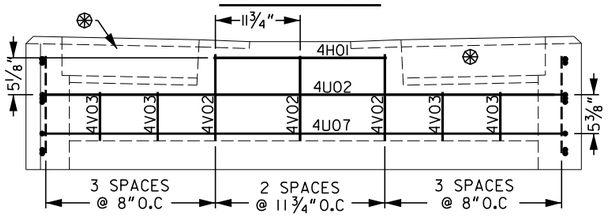

SECTION D-D

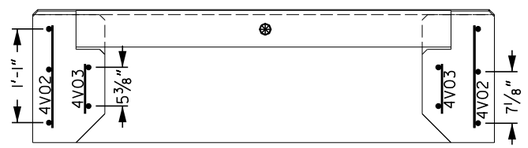

SECTION F-F

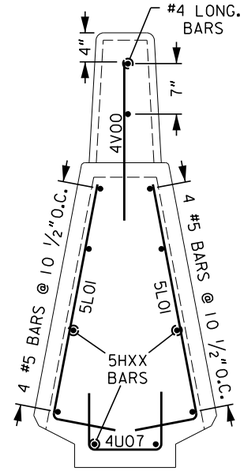

MODIFIED CONCRETE BARRIER TRANSVERSE REINFORCEMENT DETAIL (@ 6" O.C.)

DEPARTMENT OF TRANSPORTATION
STATE OF GEORGIA

STANDARD NARROW MEDIAN INLET TYPE 500I-N-2

LEVEL GRADE DOUBLE INLET
(ADJACENT TO CONCRETE BARRIER TYPE S-I)

NO SCALE — APRIL 2020

DATE | REVISION | BY

DES. JAHR
DRW. JAHR
TRA. ____
CHK. ____

(SUBMITTED) R Christopher Rudd
STATE DESIGN POLICY ENGR.

(APPROVED) Margaret B Pinkelo
CHIEF ENGINEER

NUMBER 500IN

1B OF 5

GDOT Georgia Department of Transportation | P. I. No.

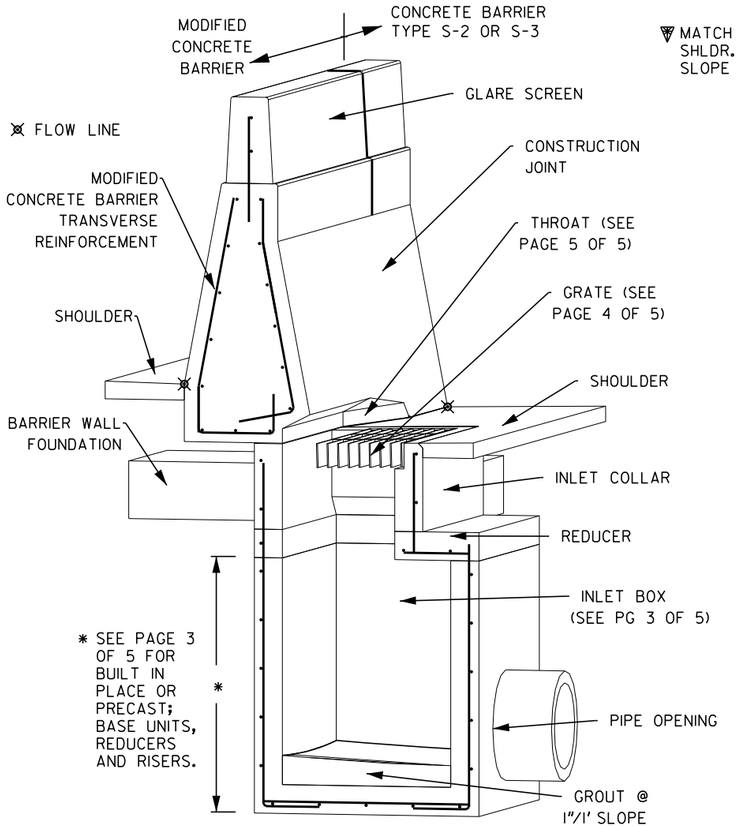

INDEPENDENT GRADE SINGLE BOTTOM INLET

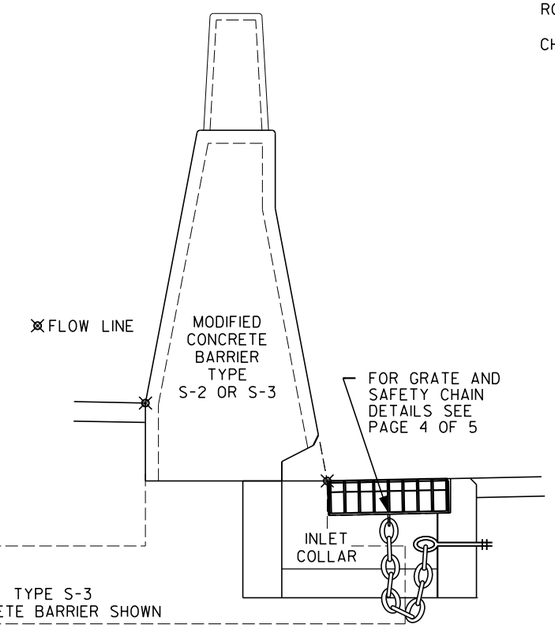

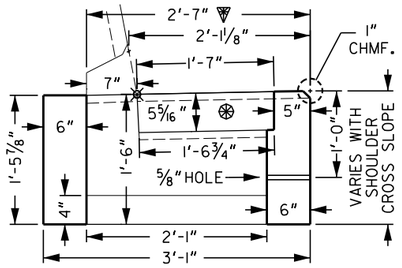

SECTION A-A

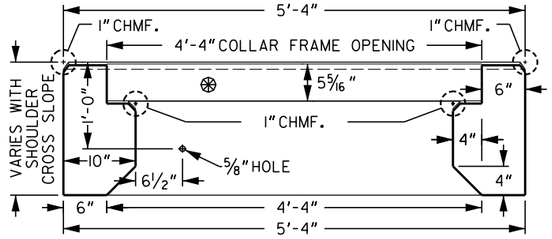

SECTION B-B

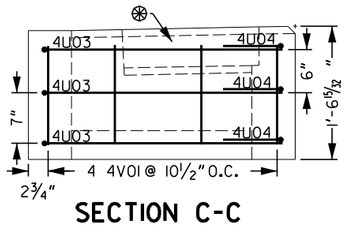

SECTION C-C

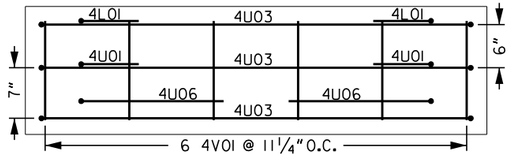

SECTION E-E

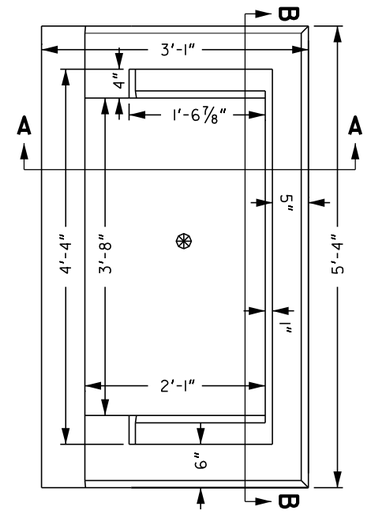

INLET COLLAR PLAN VIEW

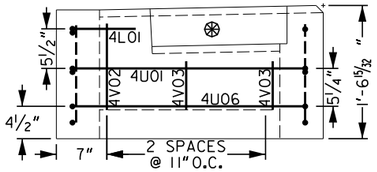

SECTION D-D

GRATE NOT SHOWN FOR CLARITY.

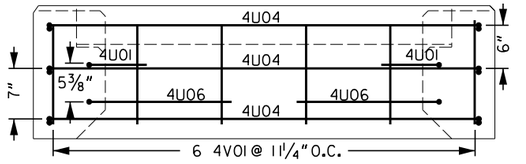

SECTION F-F

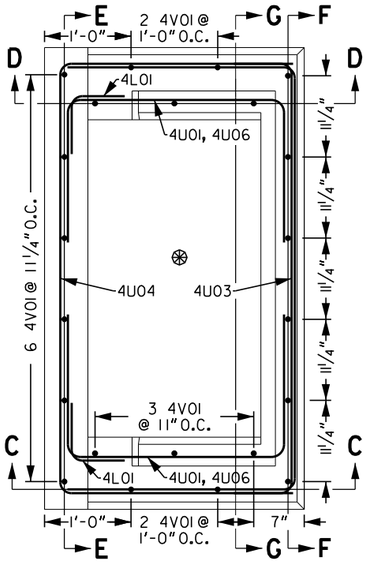

INLET COLLAR PLAN VIEW REINFORCEMENT

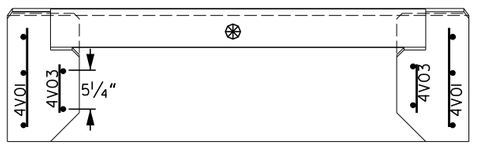

SECTION G-G

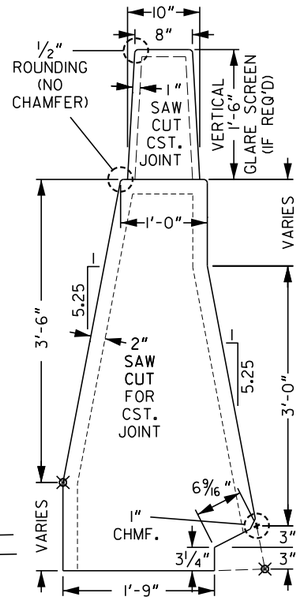

MODIFIED CONCRETE BARRIER DIMENSION DETAIL

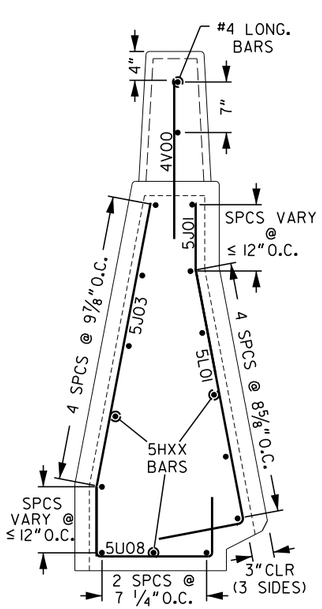

MODIFIED CONCRETE BARRIER TRANSVERSE REINFORCEMENT DETAIL (@ 6" O.C.)

	DATE	DEPARTMENT OF TRANSPORTATION STATE OF GEORGIA	
	REVISION	STANDARD NARROW MEDIAN INLET TYPE 500I-N-3 INDEPENDENT GRADE SINGLE BOTTOM INLET (ADJACENT TO CONCRETE BARRIER TYPE S-2 OR S-3)	
		NO SCALE	APRIL 2020
BY	DES. JAHR DRW. JAHR TRA. ____ CHK. ____	(SUBMITTED) R Christopher Rudd STATE DESIGN POLICY ENGR. (APPROVED) Margaret B Pinkle CHIEF ENGINEER	NUMBER 500IN 1C OF 5

GDOT Georgia Department of Transportation | P. I. No.

INDEPENDENT GRADE SINGLE TOP INLET

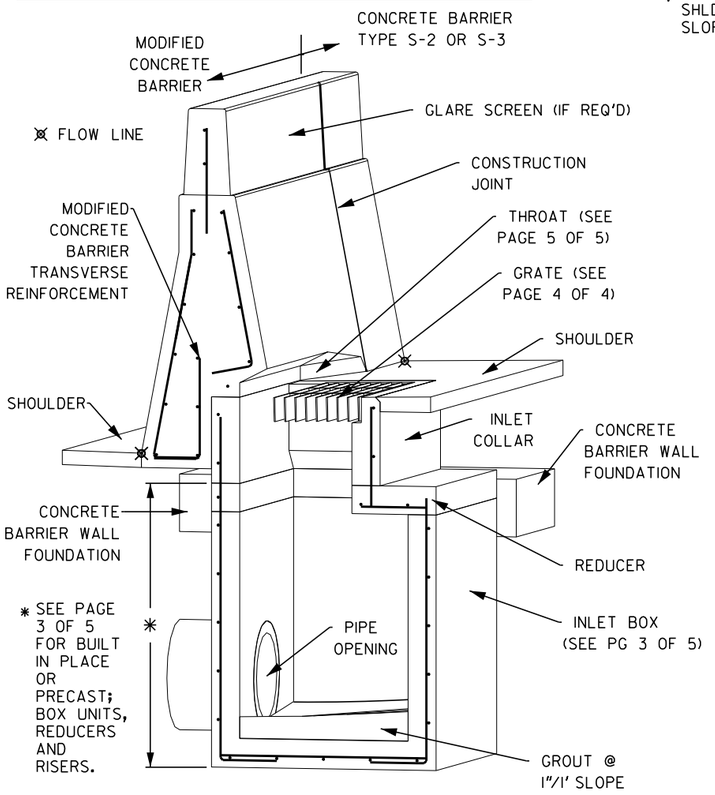

MATCH SHLDR. SLOPE

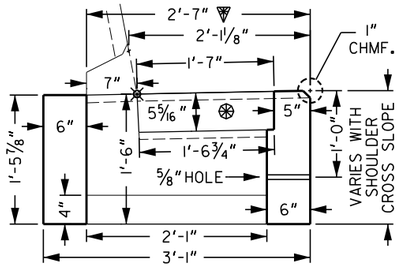

SECTION A-A

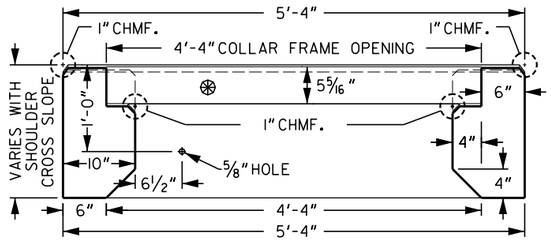

SECTION B-B

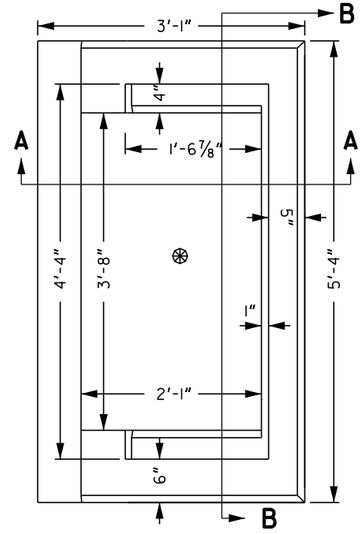

INLET COLLAR PLAN VIEW

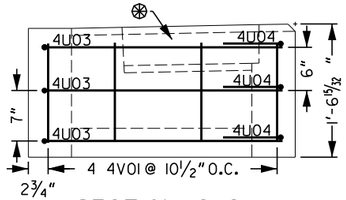

SECTION C-C

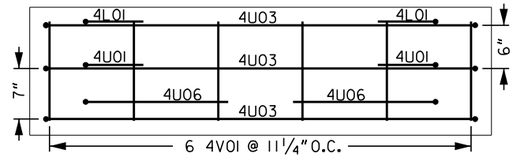

SECTION E-E

GRATE NOT SHOWN FOR CLARITY.

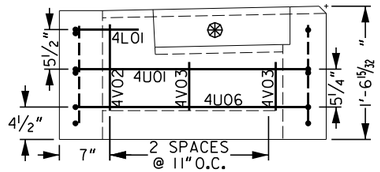

SECTION D-D

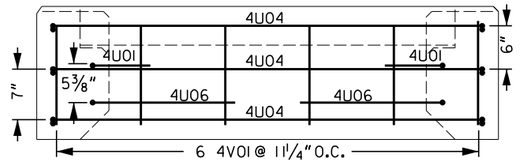

SECTION F-F

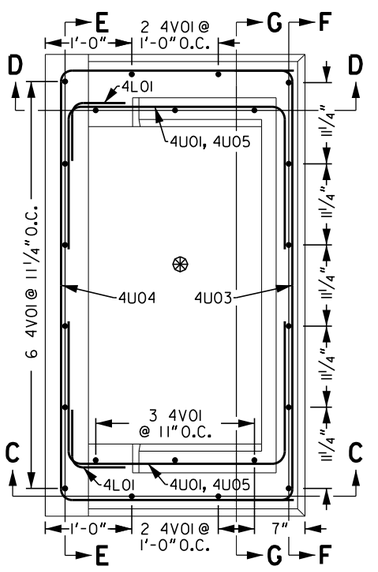

INLET COLLAR PLAN VIEW REINFORCEMENT

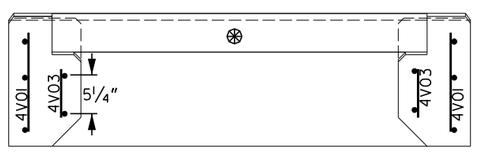

SECTION G-G

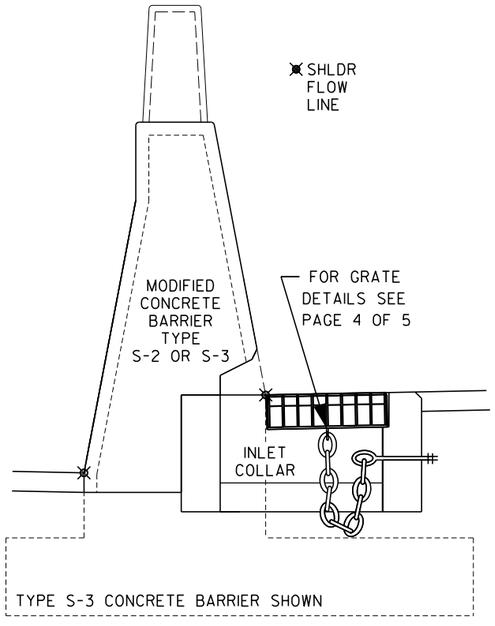

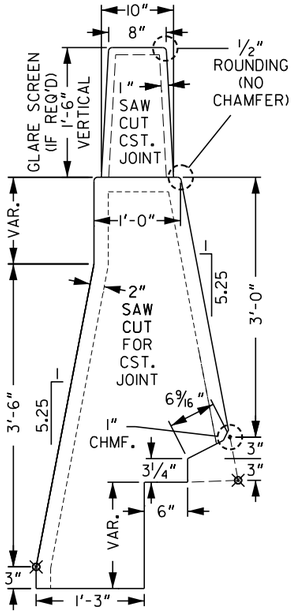

MODIFIED CONCRETE BARRIER DETAIL

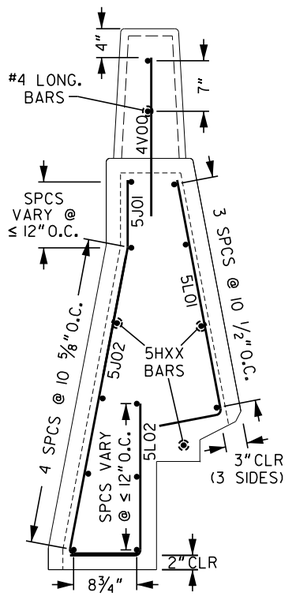

MODIFIED CONCRETE BARRIER TRANSVERSE REINFORCEMENT DETAIL (@ 6" O.C.)

DEPARTMENT OF TRANSPORTATION
STATE OF GEORGIA

STANDARD NARROW MEDIAN INLET TYPE 500I-N-4

INDEPENDENT GRADE SINGLE TOP INLET
(ADJACENT TO CONCRETE BARRIER TYPE S-2 OR S-3)

NO SCALE — APRIL 2020

DATE | REVISION | BY

DES. JAHR
DRW. JAHR
TRA. ____
CHK. ____

(SUBMITTED) R. Christopher Rudd — STATE DESIGN POLICY ENGR.
(APPROVED) Margaret B. Pinkle — CHIEF ENGINEER

NUMBER 500IN
ID OF 5

GDOT Georgia Department of Transportation | P. I. No.

INDEPENDENT GRADE DOUBLE INLET

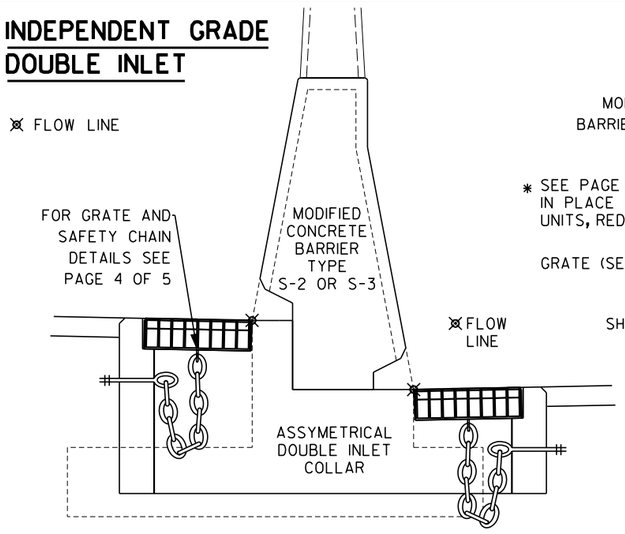

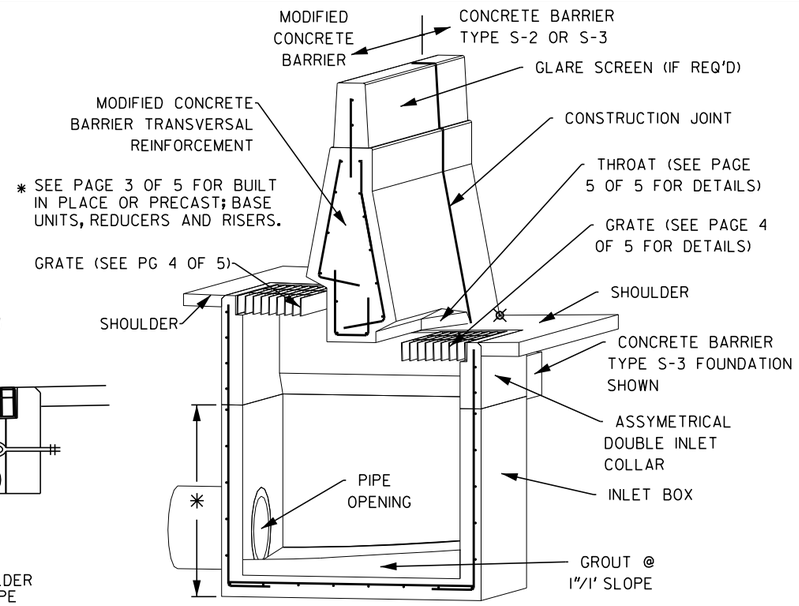

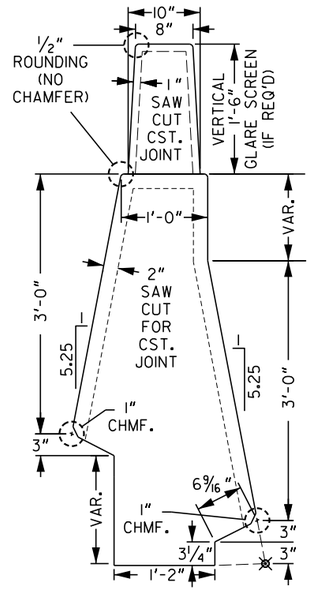

MODIFIED CONCRETE BARRIER DIMENSION DETAIL

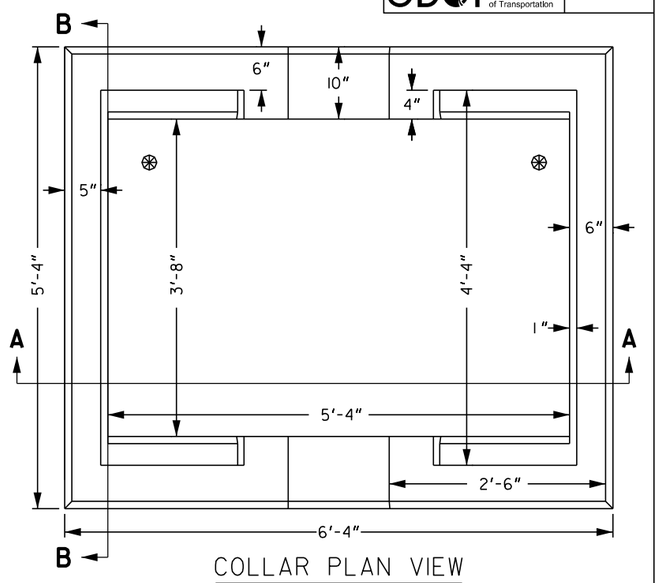

COLLAR PLAN VIEW

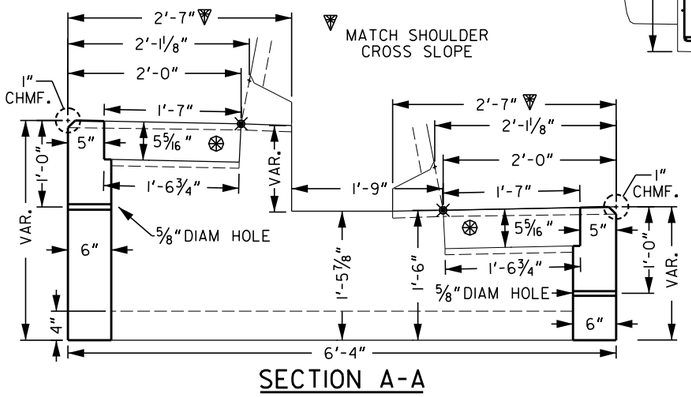

SECTION A-A

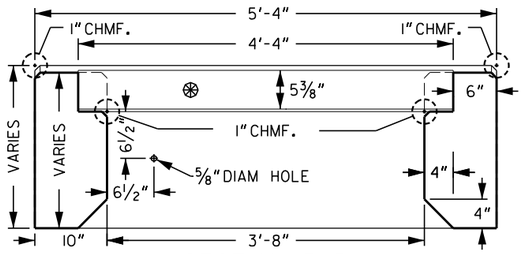

SECTION B-B

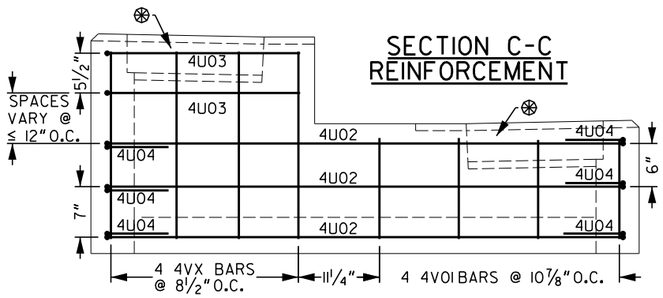

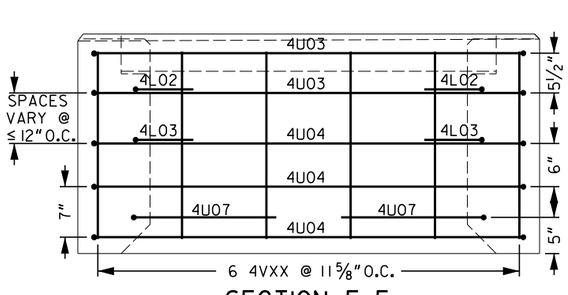

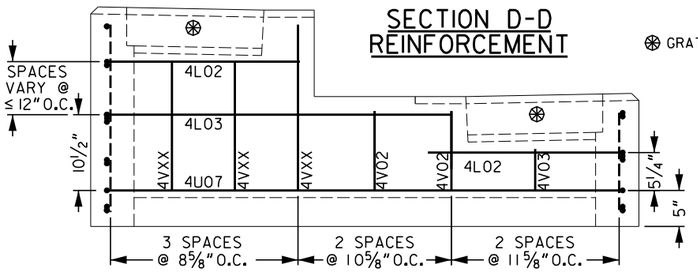

GRATE NOT SHOWN FOR CLARITY.

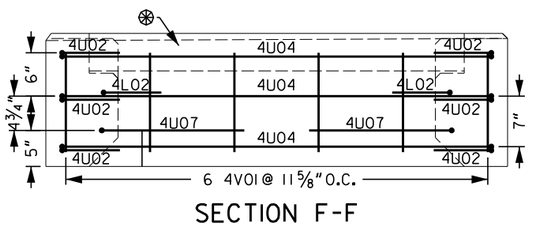

SECTION F-F

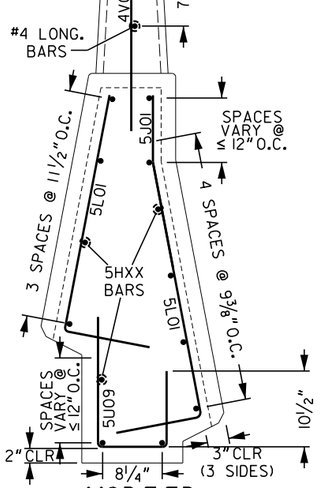

MODIFIED CONCRETE BARRIER TRANSVERSE REINFORCEMENT DETAIL (6" O.C.)

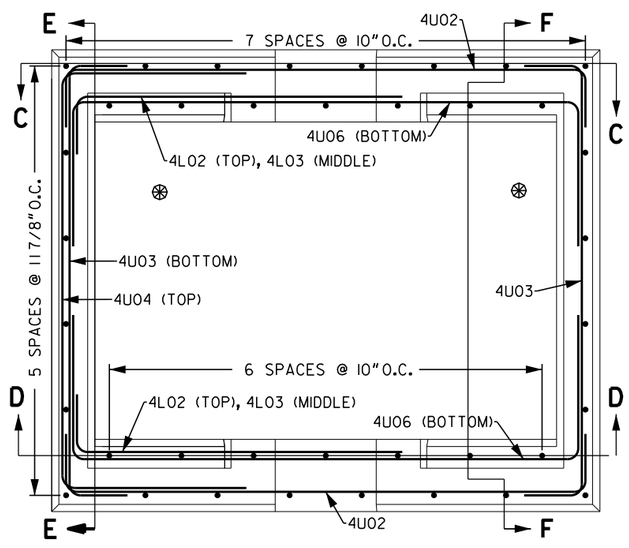

COLLAR REINFORCEMENT PLAN VIEW

DEPARTMENT OF TRANSPORTATION
STATE OF GEORGIA

STANDARD
NARROW MEDIAN INLET
TYPE 5001-N-5
INDEPENDENT GRADE DOUBLE INLET
(ADJACENT TO CONCRETE BARRIER TYPE S-2 OR S-3)

NO SCALE | APRIL 2020

DATE | REVISION | BY

DES. JAHR (SUBMITTED) R Christopher Rudd, STATE DESIGN POLICY ENGR.
DRW. JAHR
TRA. ——
CHK. ——
(APPROVED) Margaret B Pinkelo, CHIEF ENGINEER

NUMBER 500IN
1E OF 5

GDOT Georgia Department of Transportation | P. I. No.

SINGLE NARROW INLET COLLAR

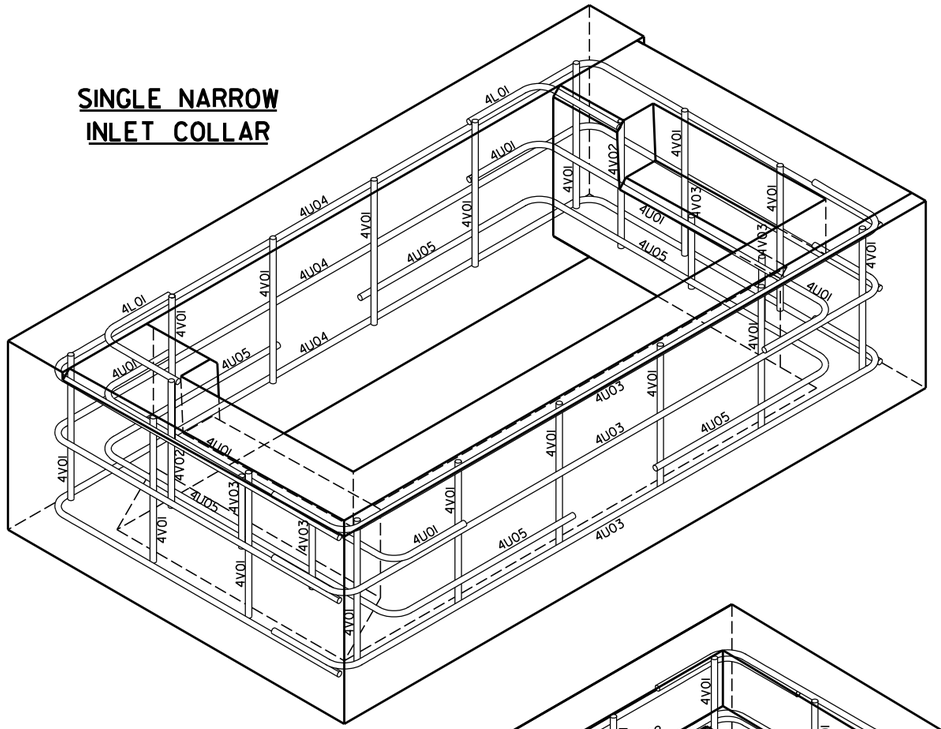

ASYMMETRICAL DOUBLE NARROW INLET COLLAR

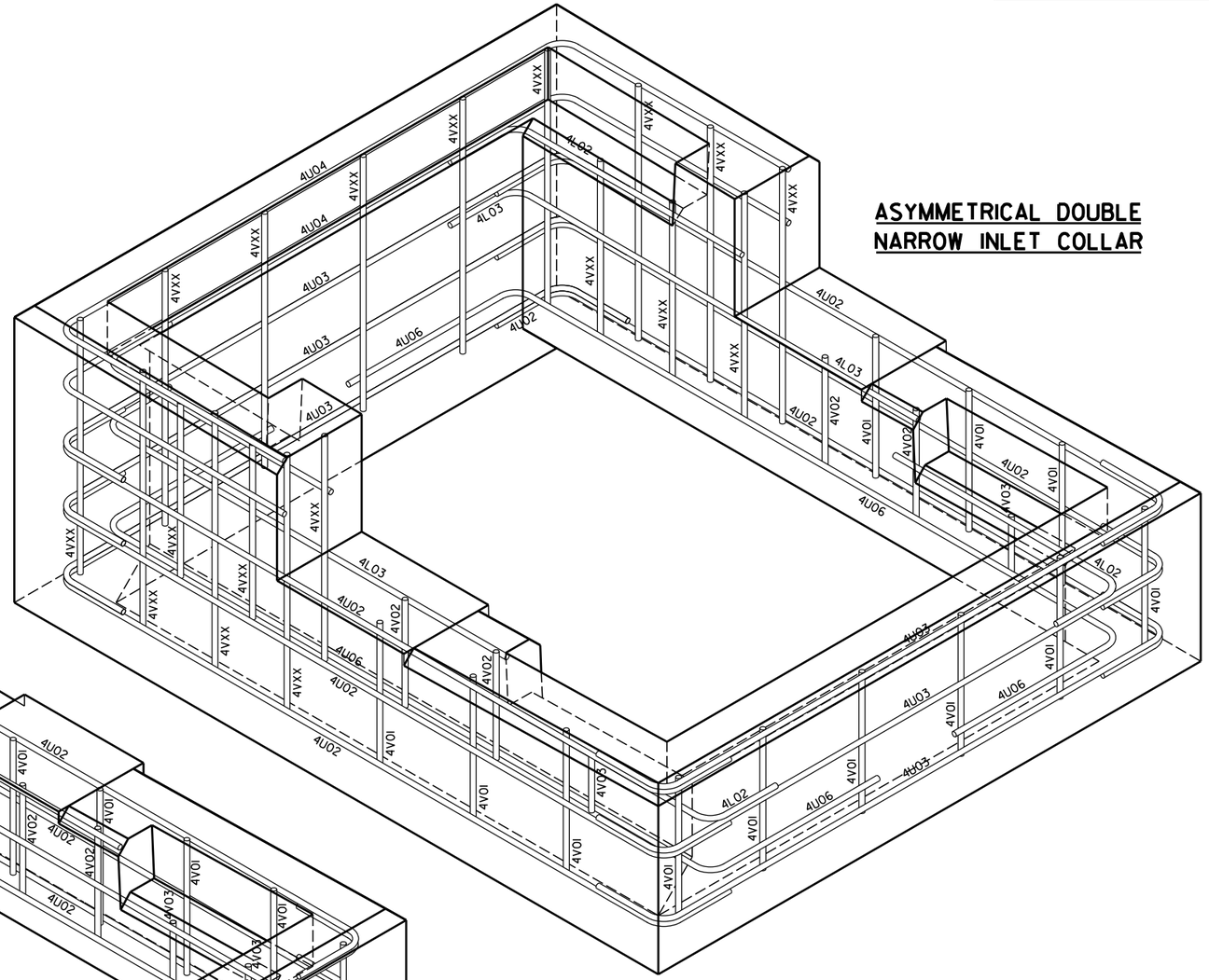

SYMMETRICAL DOUBLE NARROW INLET COLLAR

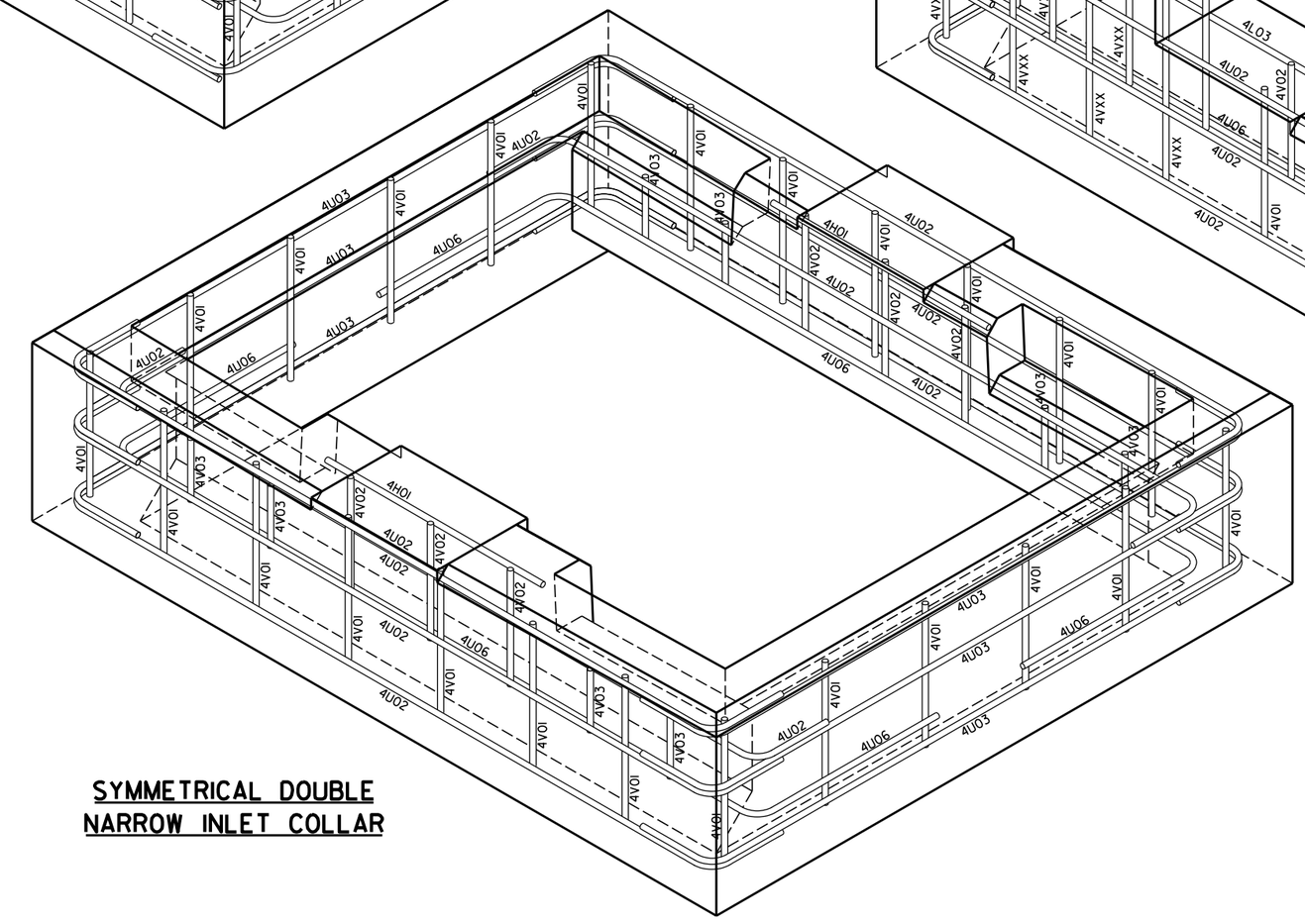

NOTE:
SEE PAGE 4 OF 5 FOR REBAR SCHEDULE AND BENDING DETAILS.

DEPARTMENT OF TRANSPORTATION
STATE OF GEORGIA

STANDARD NARROW MEDIAN INLET

ISOMETRIC VIEW AND REBAR DETAIL FOR NARROW INLET COLLARS

NO SCALE | APRIL 2020

DATE | REVISION | BY

DES. JAHR
DRW. JAHR
TRA. ____
CHK. ____

(SUBMITTED) R. Christopher Rudd
STATE DESIGN POLICY ENGR.

(APPROVED) Margaret B Pinkelo
CHIEF ENGINEER

NUMBER 500IN

GDOT Georgia Department of Transportation | P. I. No.

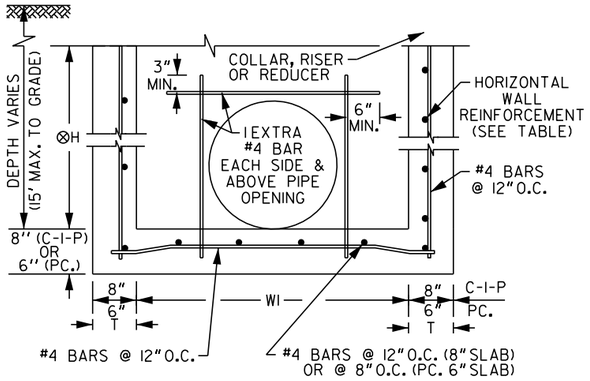

LONGITUDINAL SECTION

(CROSS DRAIN PIPE OPENING SHOWN)

⊗FOR C-I-P, CONSTRUCTION JOINT PERMITTED BETWEEN THESE LIMITS. SEE TABLES FOR MINIMUM DIMENSIONS.

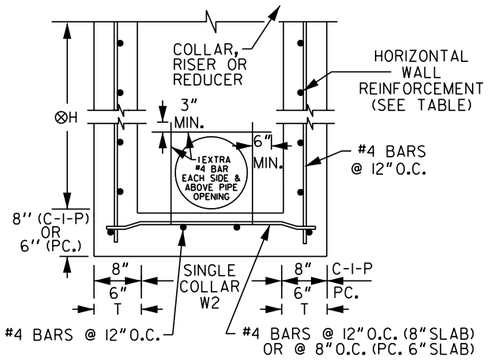

TRANSVERSE SECTION OF SINGLE COLLAR INLETS TYPE N-1, N-3, OR N-4

(LONGITUDINAL DRAIN PIPE OPENING SHOWN)

TRANSVERSE SECTION FOR DOUBLE COLLAR INLETS TYPE N-2 OR N-5

(LONGITUDINAL DRAIN PIPE OPENING SHOWN)

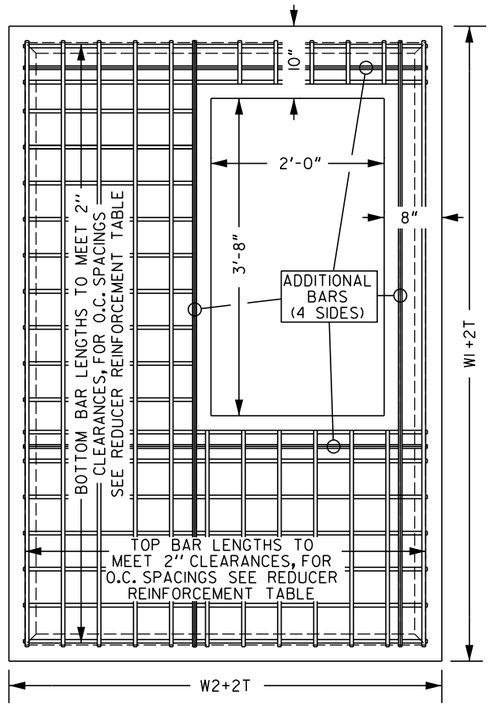

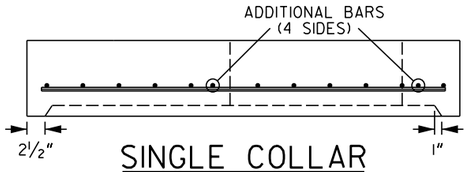

SINGLE COLLAR REDUCER SLAB DETAIL

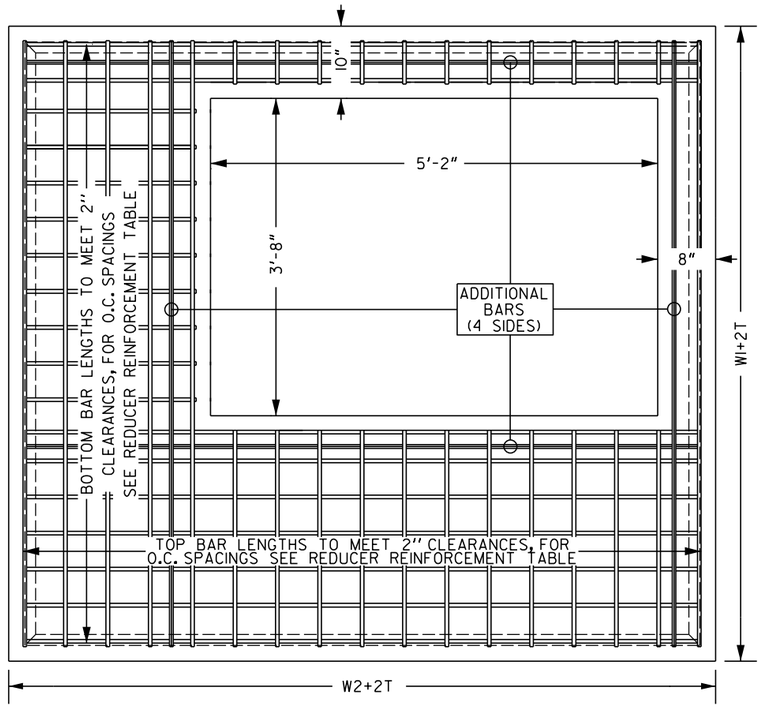

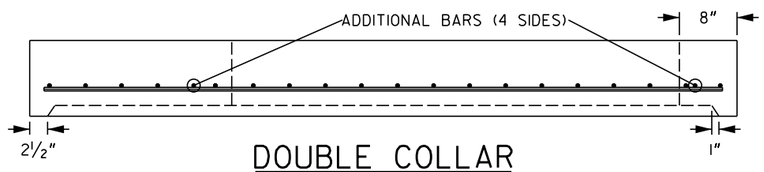

DOUBLE COLLAR REDUCER SLAB DETAIL

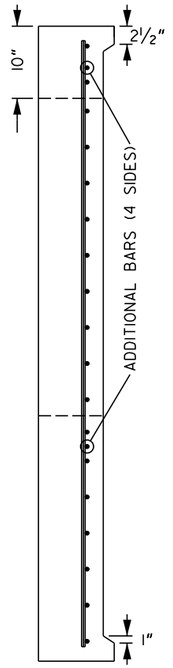

NOTE:
IF THE BASE IS LARGER THAN THE COLLAR, USE REDUCER THAT FITS FLUSH WITH EXTERIOR BASE WALLS.

HORIZONTAL WALL REINFORCEMENT				
T (WALL THICKNESS)	SCHEDULE	AREA IN2/FT	MAX. SPACING BARS	MAX. SPACING WWF
0"-3"	A12	0.20	12"	8"
3"-6"	A6	0.20	6"	5"
6"-9"	B5.5	0.24	5 1/2"	5"
9"-15"	C6.5	0.37	6 1/2"	6"

GREATER WI OR W2	BAR SIZE	S MAX.
44"	#4	6"
48"	#4	6"
54"	#4	6"
60"	#5	6"
66"	#6	6"
72"	#6	5 1/2"
84"	#6	5"

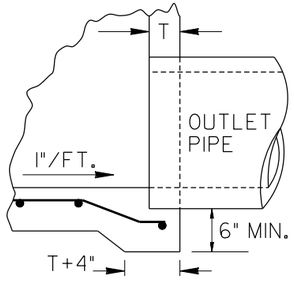

ALTERNATE TO INVERT

BOX DIMENSIONS FOR DROP INLET WITH CROSS DRAIN PIPE		
PIPE SIZE	WI+2T	MIN. HEIGHT ⊗
18"	5'-4"	4'-2"
24"	5'-4"	4'-9"
30"	5'-4"	5'-4"
36"	5'-4"	6'-4"
42"	5'-4"	7'-8"
48"	5'-4"	9'-0"
54"	5'-9"	10'-4"
60"	6'-4"	11'-8"
72"	6'-4"	11'-8"

BOX DIMENSIONS FOR DROP INLET WITH LONGITUDINAL PIPE			
PIPE SIZE	SINGLE COLLAR W2+2T	DOUBLE COLLAR W2+2T	MIN. HEIGHT ⊗
18"	4'-3"	10'-2"	4'-2"
24"	4'-3"	10'-2"	4'-9"
30"	4'-3"	10'-2"	5'-4"
36"	4'-3"	10'-2"	5'-10"
42"	4'-10"	10'-2"	6'-6"
48"	5'-8"	10'-2"	7'-1"
54"	5'-8"	10'-2"	7'-1"
60"	5'-8"	10'-2"	7'-1"
72"	5'-8"	10'-2"	7'-1"

DATE | REVISION | BY

DEPARTMENT OF TRANSPORTATION
STATE OF GEORGIA

STANDARD NARROW MEDIAN INLET

INLET BOX AND REDUCER SLAB DETAILS

NO SCALE — APRIL 2020

DES. JAHR
DRW. JAHR
TRA. ____
CHK. ____

(SUBMITTED) R Christopher Rudd — STATE DESIGN POLICY ENGR.

(APPROVED) Margaret B Pinkel — CHIEF ENGINEER

NUMBER 500IN

REBAR DETAILS AND BAR SCHEDULE FOR COLLAR AND MODIFIED BARRIERS

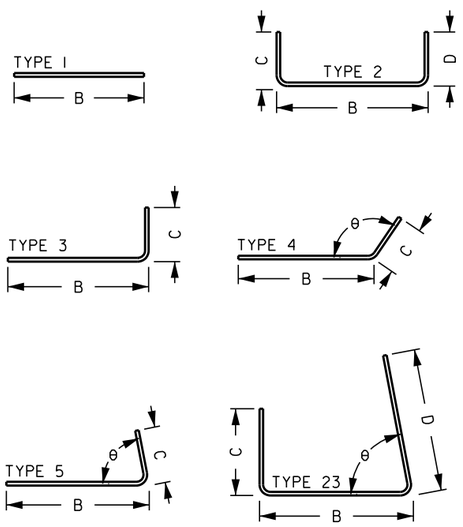

NOTE: REBAR DIMENSIONS AND BENDING FOLLOW GA STANDARD 3901

REBAR SCHEDULE:			DIMENSIONS:				PAGE
NUMBER	SIZE	TYPE	B	C	D	θ	
4H01	#4	1	2'-0"	-	-	-	1B
4L01	#4	3	9"	8"	-	-	1A, 1C, 1D
4L02	#4	3	2'-3"	8"	-	-	1E
4L03	#4	3	3'-11¾"	8"	-	-	1E
4U01	#4	2	2'-9"	8"	8"	-	1A, 1B, 1C, 1D, 1E
4U02	#4	2	5'-11"	8"	8"	-	1A, 1B, 1C, 1D, 1E
4U03	#4	2	5'-0"	8"	8"	-	1A, 1C, 1D, 1E
4U04	#4	2	5'-0"	2'-9"	2'-9"	-	1A, 1B, 1C, 1D, 1E
4U05	#4	2	2'-9"	1'-8"	1'-8"	-	1A, 1C, 1D
4U06	#4	2	6'-0"	1'-8"	1'-8"	-	1B, 1E
4VXX	#4	1	VAR	-	-	-	1E
4V00	#4	1	1'-10"	-	-	-	1A, 1B, 1C, 1D, 1E
4V01	#4	1	1'-1¾"	-	-	-	1A, 1B, 1C, 1D, 1E
4V02	#4	1	11¼"	-	-	-	1A, 1B, 1C, 1D, 1E
4V03	#4	1	6"	-	-	-	1A, 1B, 1C, 1D, 1E
5G01	#5	23	1'-4"	1'-0"	3'-4⅜"	79°	1A, 1C, 1D
5HXX	#5	1	VAR	-	-	-	5
5J01	#5	4	3'-4"	1'-0"	-	169°	1C, 1D, 1E
5J02	#5	4	VAR	1'-6"	-	169°	1D
5J03	#5	4	3'-6"	9¾"	-	79°	1C
5L01	#5	3	3'-0"	1'-0"	-	-	1A, 1B, 1C, 1D, 1E
5L02	#5	3	VAR	9¾"	-	-	1E
5U07	#5	2	10"	8"	8"	-	1B
5U08	#5	2	1'-4"	VAR	8"	-	1C
5U09	#5	2	9½"	VAR	8"	-	1E

GRATE DETAILS

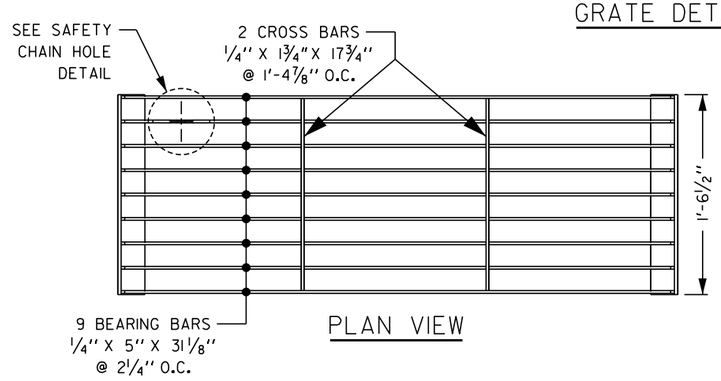

PLAN VIEW

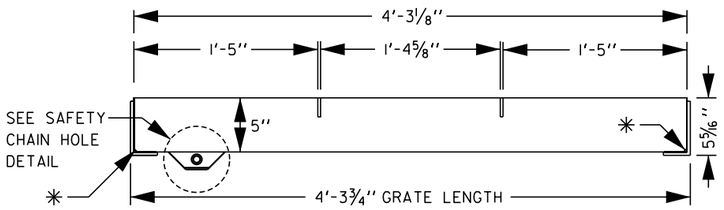

✳ SEE GALVANIZATION NOTCH DETAIL

ELEVATION VIEW

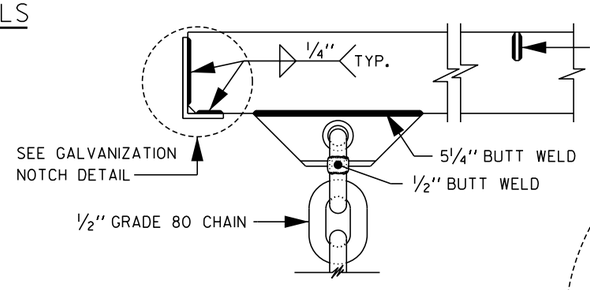

WELD DETAIL

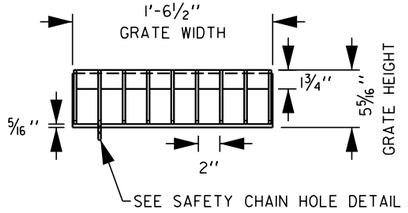

SIDE VIEW

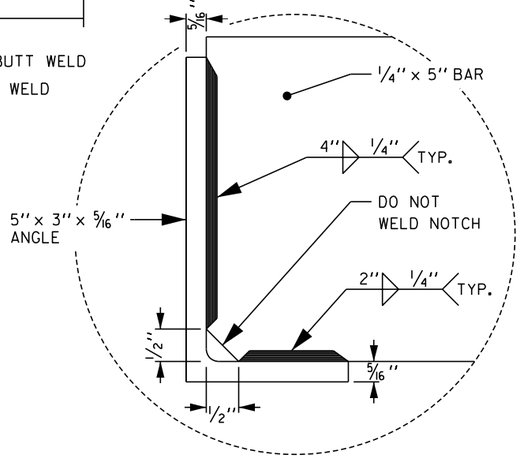

GALVANIZATION NOTCH DETAIL

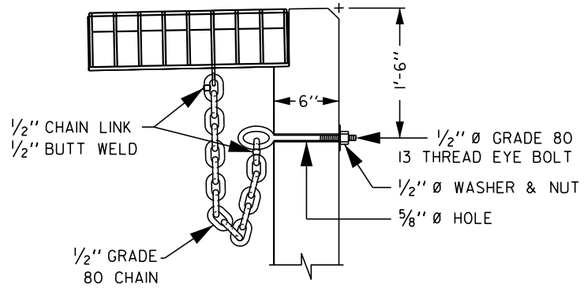

SAFETY CHAIN DETAIL

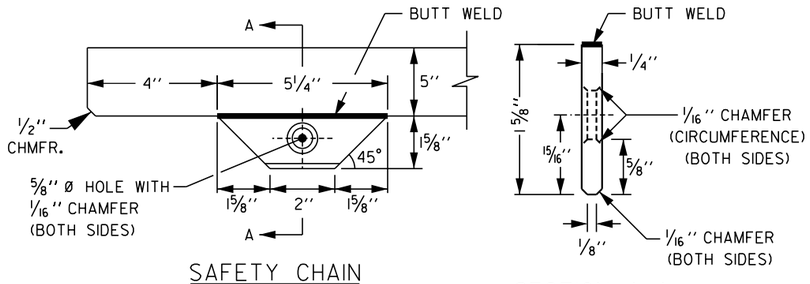

SAFETY CHAIN HOLE DETAIL

SECTION A-A

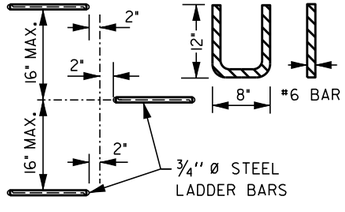

STEEL LADDER BAR STEPS

NOTES:
STEPS ARE REQ'D ON ALL STRUCTURES WHERE H IS GREATER THAN 4'-0". AN ALTERNATE STEP MAY BE SUBSTITUTED IF APPROVED BY THE GA D.O.T. OFFICE OF MATERIALS AND TESTING.

NOTE:
BOTH THE GRATE AND THE FRAME SHALL BE EITHER ASTM A-36 STEEL (HOT-DIPPED GALVANIZED, MEETING ASTM SPECIFICATION A-123) OR ASTM A-588 STEEL (NOT GALVANIZED). FOR A-36 STEEL, AFTER FABRICATION, DRILL A ¼" Ø HOLE IN ONE FRAME CORNER TO PREVENT BUILD-UP OF GALVANIZING MATERIAL.

BY	DATE	REVISION
JAHR	11-04-20	REVISED GRATE DIMENSIONS
JAHR	07-01-25	ADDED GALVANIZATION NOTCHES

DEPARTMENT OF TRANSPORTATION
STATE OF GEORGIA

STANDARD
NARROW MEDIAN INLET

REBAR SCHEDULE, GRATE, SAFETY CHAIN, AND STEEL LADDER BAR STEPS DETAILS

NOT TO SCALE — APRIL 2020

DES. JAHR
DRW. JAHR
TRA. ____
CHK. ____

(SUBMITTED) Daniel C. Pass — STATE DESIGN POLICY ENGR.
(APPROVED) Margaret G. Pirkle — CHIEF ENGINEER

NUMBER 5001-N

GDOT Georgia Department of Transportation | P. I. No.

THROAT DETAIL (PLAN VIEW)

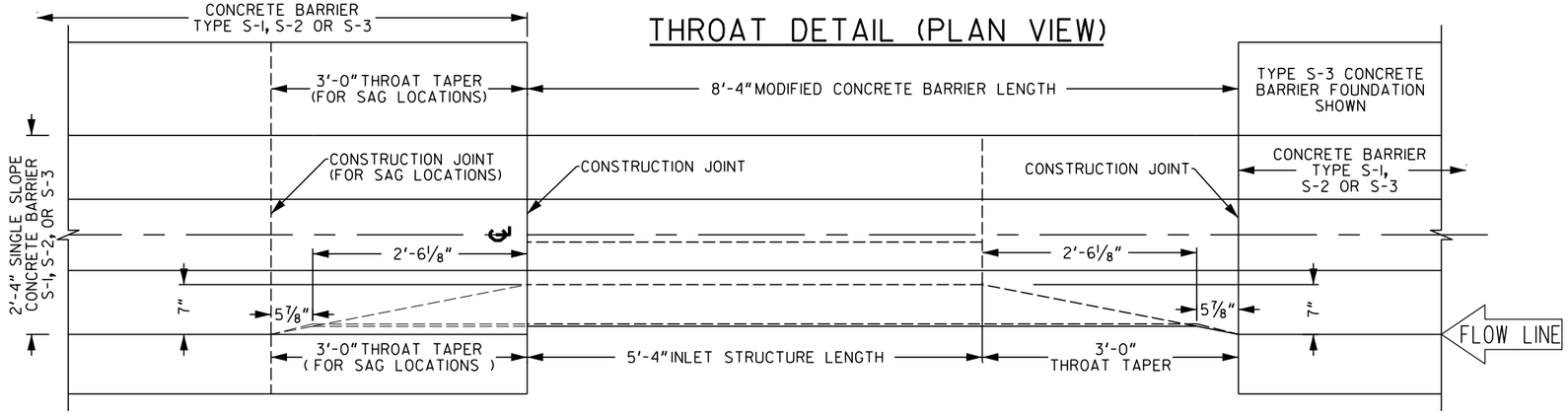

THROAT DETAIL (ELEVATION VIEW)

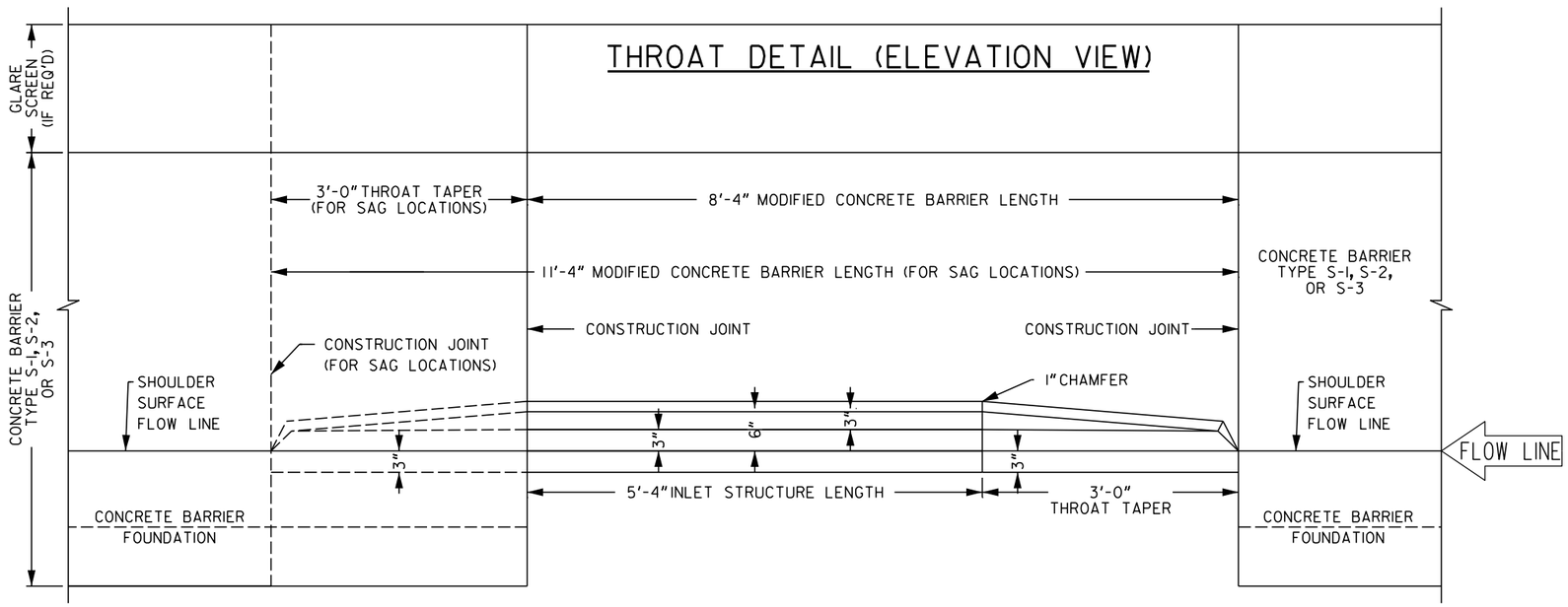

LONGITUDINAL REINFORCEMENT DETAIL

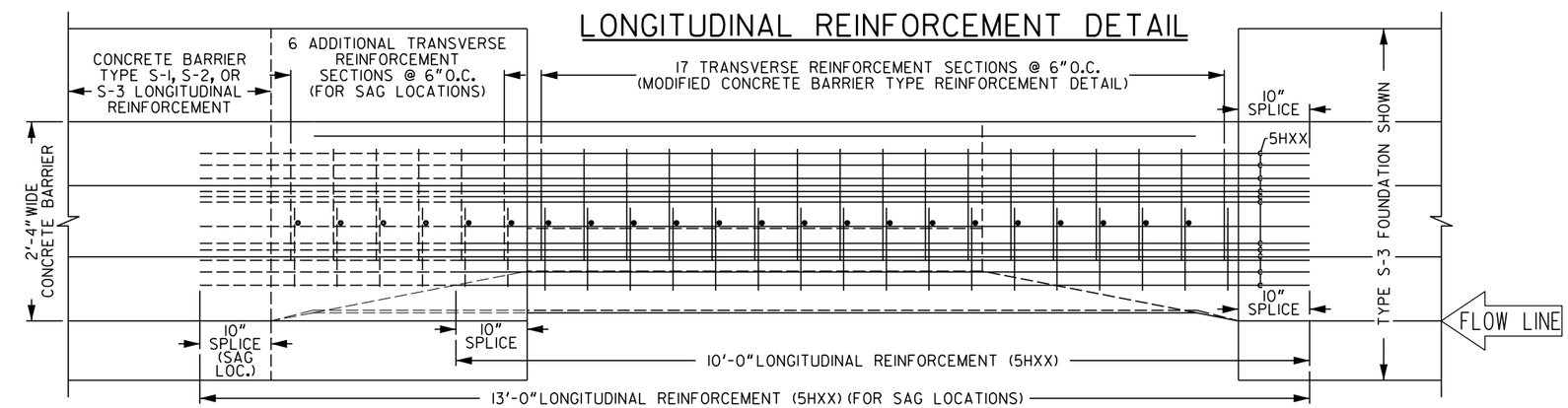

GENERAL NOTES:

1. SPECIFICATION: GEORGIA STANDARD CURRENT EDITION, AND SUPPLEMENTS THERETO.
2. STANDARD 500I-N INLET GRATES ARE FOR USE ONLY ON LIMITED ACCESS TYPE FACILITIES, WHERE BICYCLES AND SCOOTERS ARE PROHIBITED.
3. INLETS SHALL BE DESIGNATED AS GROUP I (SEC. 668)
4. INVERTS AND PIPES SHOWN ARE ILLUSTRATIVE. SEE PLANS FOR SPECIFICS. INVERTS SHALL BE FORMED WITH GROUT OR CONCRETE AS SHOWN IN THE PLANS OR AS DIRECTED BY THE ENGINEER.
5. FOR CONCRETE BARRIER DETAILS NOT SHOWN, SEE SEPARATE STANDARDS OR PLAN DETAILS. IF THE ROADWAY BARRIER HAS REINFORCING STEEL, THE REINFORCEMENT SHALL BE CONTINUED IN BARRIER SECTION ACROSS THE INLET. ADDITIONAL REINFORCING REQUIRED WHERE SHOWN.
6. FOR USE ONLY ADJACENT TO CONCRETE BARRIER; IN SHOULDERS 2'-0" TO 4'-6" WIDE. OTHERWISE, 500IM SHALL BE USED.
7. IF THE BASE OF THE INLET STRUCTURE CONFLICTS WITH AN EXISTING BARRIER (OR WALL) FOOTING, THE FOOTING MAY BE NOTCHED OUT AS SMALL AS POSSIBLE TO FIT THE STRUCTURE. IF AN EXISTING FOOTING OR TRAVEL LANES PREVENT NORMAL LOCATION OF LONGITUDINAL PIPES, AND IF HYDRAULICS AND BRIDGE APPROVE FOR DRAINAGE AND STRUCTURAL INTEGRITY RESPECTIVELY, A CLASS 5 LONGITUDINAL PIPE MAY BE LOCATED UNDER A NEW RECONSTRUCTED BARRIER (OR WALL) FOR THE CONFLICTING LENGTH WITH THE USE OF A DROP STRUCTURE. THE DROPPED PIPE SHALL MEET WITH THE DOWNSTREAM DESIGN PIPE, MAINTAINIG A MINIMUM VELOCITY OF 3 FT/S, A MINIMUM CLEARANCE OF 1 FT FROM THE BASE OF THE FOOTING TO THE TOP OF THE PIPE, AND CONNECTING TO A SECOND DROP INLET (OR MANHOLE) WHERE THE INVERTS OF THE DESIGN PIPE AND THE DROP PIPE MATCH, OR AT 500 FT OR 300 FT FOR STRAIGHT OR CURVED RUNS RESPECTIVELY; WHICH EVER IS THE SHORTEST RUN.
8. DRAINAGE STRUCTURE NOT TO BE PLACED WITHIN TRAVEL LANES.
9. ALL COLLAR AND BOX REINFORCEMENT SHALL HAVE MINIMUM 2" CLEARANCES FROM ALL EXTERIOR AND INTERIOR FACES.
10. ALL MODIFIED BARRIER REINFORCEMENT SHALL HAVE MINIMUM 3" CLEARANCES FROM ALL FACES.
11. ALL MODIFIED CONCRETE BARRIER WILL BE PAID FOR UNDER THE SAME ITEM AS THE EXISTING OR PROPOSED CONCRETE BARRIER TYPE IT REPLACES.

DEPARTMENT OF TRANSPORTATION
STATE OF GEORGIA

STANDARD NARROW MEDIAN INLET

GENERAL NOTES, MODIFIED BARRIER THROAT AND LONGITUDINAL REINFORCEMENT DETAILS

NO SCALE | APRIL 2020

DATE | REVISION | BY

DES. JAHR
DRW. JAHR
TRA. ____
CHK. ____

(SUBMITTED) R. Christopher Rudd
STATE DESIGN POLICY ENGR.

(APPROVED) Margaret B. Pirkle
CHIEF ENGINEER

NUMBER 500IN
5 OF 5

STATE	PROJECT NUMBER	SHEET NO.	TOTAL SHEETS
GA.			

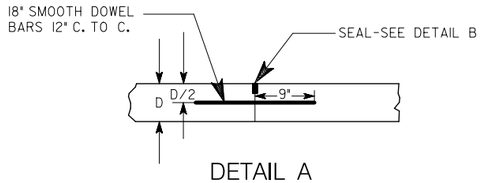

DETAIL A

TRANSVERSE CONSTRUCTION OR SAWED CONTRACTION JOINTS

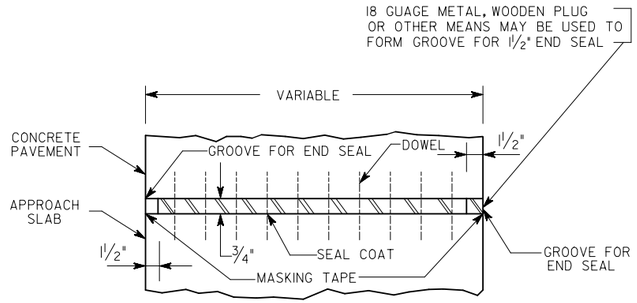

DETAIL C

PLAN OF TRANSVERSE EXPANSION JOINT BETWEEN PAVEMENT AND BRIDGE APPROACH SLAB

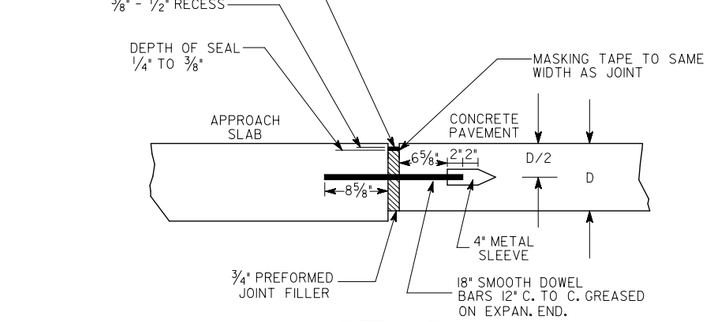

DETAIL D

EXPANSION JOINT

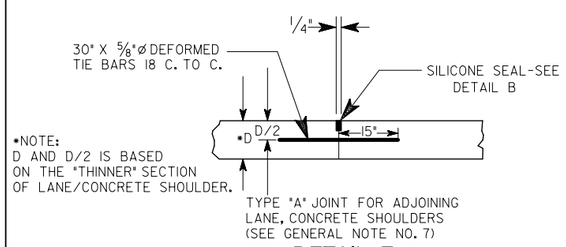

DETAIL E

ADJOINING LANES, CONCRETE SHOULDER, LONGITUDINAL SAWED OR FORMED JOINTS

FOR DETAILS OF SHOULDER SEE PLANS

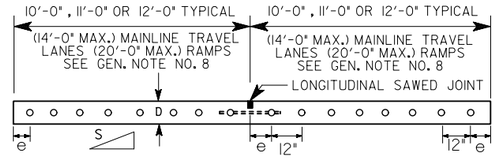

SEE PLANS FOR REQUIRED SLOPE

UNIFORM THICKNESS DOWELED PORTLAND CEMENT CONCRETE PAVING WITH CENTER JOINT AND TIE BARS AND 90° TRANSVERSE CONTRACTION JOINTS AT 15 FT. INTERVALS

e = 6" UNLESS SPECIFIED OTHERWISE

SECTION A–A

SECTION THROUGH TRANSVERSE JOINT

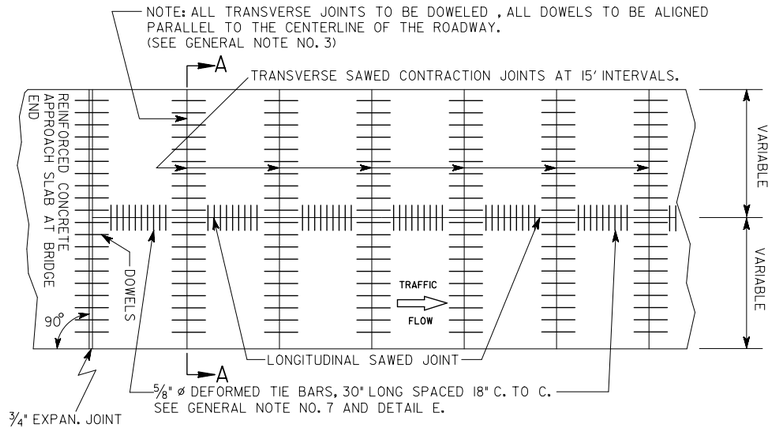

STANDARD JOINT LAYOUT

WHERE A NEW LANE WILL BE ADJOINING AN EXISTING P.C. CONCRETE PAVED LANE, THE SPACING FOR THE TRANSVERSE JOINTS IN THE NEW LANE WILL BE VARIED FROM THAT SHOWN ABOVE WHERE NECESSARY TO MATCH THE TRANSVERSE JOINTS IN THE EXISTING LANE. WHEN EXISTING PAVING JOINTS EXCEED 25 FEET IN LENGTH AN INTERMEDIATE TRANSVERSE JOINT WILL BE ESTABLISHED IN THE NEW LANE AT MID-SLAB.

REQUIRED DOWEL BAR DIAMETERS

PAVEMENT THICKNESS (D)	DOWEL BAR DIAMETERS
6"	1¼"
6½"	1¼"
7"	1¼"
7½"	1¼"
8"	1¼"
8½"	1¼"
9"	1¼"
9½"	1½"
10"	1½"
10½"	1½"
11"	1½"
11½"	1½"
12"	1½"

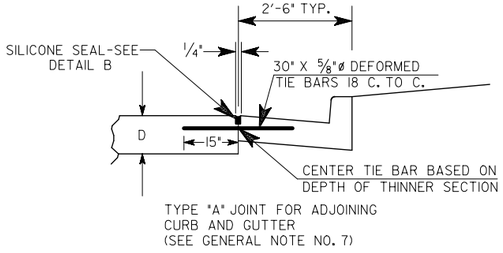

DETAIL F

ADJOINING CURB AND GUTTER

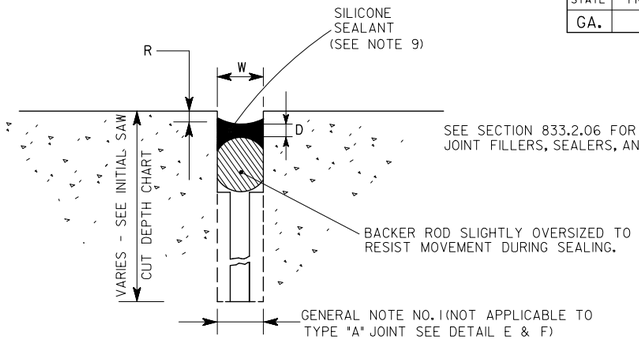

DETAIL B

CONTRACTION OR CONSTRUCTION JOINT

JOINT SCHEDULE			
TYPE	W	D	R
TRANSVERSE JOINT	¼"	¼"-⅜"	⅜" TO ½"
℄ LONGITUDINAL SAWED JOINT	¼"	¼"-⅜"	⅜" TO ½"
JOINT FOR ADJOINING LANE FOR TYPE "A" JOINT	¼"	¼"-⅜"	⅜" TO ½"

REQUIRED MINIMUM DEPTH OF INITIAL SAW CUT FOR LONGITUDINAL AND TRANSVERSE JOINTS. ALL INITIAL CUTS TO BE ⅛" IN WIDTH.

DEPTH OF PAVEMENT D	DEPTH OF CUT
6"	1¾"
6½"	1⅞"
7"	2"
7½"	2⅛"
8"	2¼"
8½"	2⅜"
9"	2½"
9½"	2⅝"
10"	2¾"
10½"	2⅞"
11"	3"
11½"	3⅛"
12"	3¼"

GENERAL NOTES:

1. THE LOCATION OF THE INITIAL SAW CUT MAY VARY BETWEEN THESE LINES.
2. CONTRACTION JOINT FOR CONCRETE SHOULDERS SHALL CONFORM WITH TRANSVERSE SAWED CONTRACTION JOINT IN MAINLINE PAVEMENT.
3. TRANSVERSE JOINTS SHALL BE PERPENDICULAR TO THE CENTER LINE OF THE LANE BEING PLACED, EXCEPT WHERE NEW LANES ARE PLACED AGAINST EXISTING LANES WITH SKEWED JOINTS. THE NEW JOINTS WILL MATCH THE SKEW OF THE EXISTING PAVEMENT.
4. JOINTS IN ACCELERATION AND DECELERATION LANES ARE TO COINCIDE WITH MAINLINE JOINTS, BUT MAY BE NORMAL TO ACCELERATION OR DECELERATION EDGE.
5. GA. STD. SPECIFICATIONS (SEC. 430) FOR TOLERANCE ON DOWELS.
6. CASES WHERE CONCRETE CURB AND GUTTER IS PLACED ADJACENT TO A CONCRETE ROADWAY SLAB, THE LONGITUDINAL JOINT SHALL BE SAWED AND SEALED OR FORMED AND SEALED AS A LONGITUDINAL JOINT AS SHOWN BY THE STANDARD.
7. NO TIE BAR SHALL BE LOCATED CLOSER THAN 18" TO A TRANSVERSE JOINT. WHERE NEW CONCRETE WILL BE ADJOINING EXISTING CONCRETE, DO NOT TIE NEW CONCRETE TO EXISTING CONCRETE.
8. SPACING BETWEEN LONGITUDINAL JOINTS SHALL NOT EXCEED 14'-0" FOR MAINLINE TRAVEL LANES. RAMP PAVEMENT SECTIONS OVER 14'-0" WIDE SHALL HAVE A LONGITUDINAL SAWED JOINT ALONG THE CENTERLINE AND THE SPACING BETWEEN LONGITUDAL JOINTS SHALL NOT EXCEED 20'-0".
9. WHEN SELF LEVELING SILICONE SEALANT IS USED, TOOLING OF THE SEALANT TO OBTAIN A CONCAVE SURFACE IS NOT REQUIRED IF SEALENT MEETS DIMENSIONS OF DETAIL B.

BY	REVISION	DATE
HAC	ADD DIM'S PAV/DOWELTBL	1-18-18
	ADD DIM'S PAV/SAWCUT TBL	
	REV TYPOS) & ADD LABELS	
	REV DTL "F" TIE BAR LOC	1-25-07
GLO	REV. DOWELS DIA. AND TRANSVERSE JTS. SPACING AND REV. GEN. NOTE 8.	
	REV. GEN. NOTE 3, 7 & 8.	8-9-02
RMC	¼" TRANSVERSE JOINT	4-3-2000

DEPARTMENT OF TRANSPORTATION
STATE OF GEORGIA

STANDARD

JOINT DETAILS FOR PORTLAND CEMENT CONCRETE PAVING

NO SCALE — REV. & REDRAWN MAY, 1996

DES. ____ DRW. ____ TRA. ____ CHK. ____

(SUBMITTED) STATE ROAD & AIRPORT DESIGN ENGINEER

(APPROVED) CHIEF ENGINEER

NUMBER 5046H

STATE	PROJECT NUMBER	SHEET NO.	TOTAL SHEETS
GA.			

DETAILS OF RIGHT OF WAY MARKERS

NOTE: R/W MARKERS MAY BE EITHER CONCRETE OR GRANITE. ALL MARKERS SHALL BE PLACED AS DIRECTED BY THE ENGINEER.

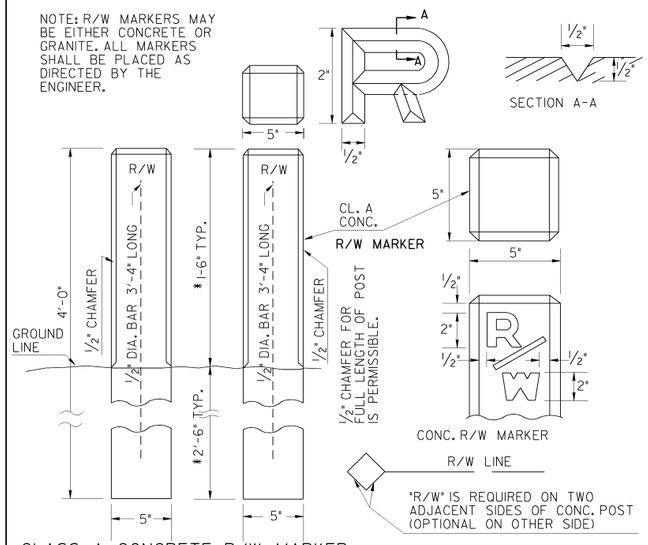

CLASS A CONCRETE R/W MARKER

* NOTE: WHERE DIRECTED BY THE ENGINEER, THE ABOVE GROUND HEIGHT OF ANY R/W MARKER SHALL BE REDUCED BY INCREASING THE DEPTH AS NEEDED WITH NO ADDITIONAL PAYMENT.

FRONT, BACK & TOP OF GRANITE R/W MARKER SHALL BE SAWED OR DRESSED

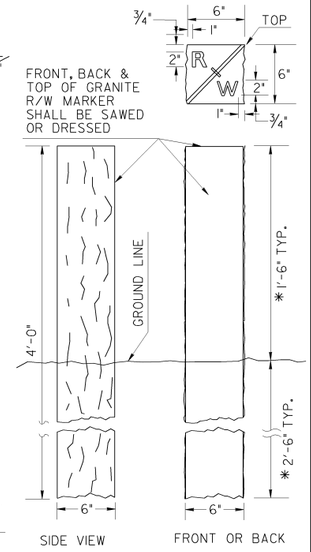

(ALTERNATE) GRANITE R/W MARKER

BY	REVISION	DATE
R.M.U.	ADD GRANITE R/W M.	5-24-85
R.M.U.	VAR. HT. R/W MARKER	10-11-88
R.M.U.	REV. F.A.P. - SP. POST ALT.	9-28-90
G.J.P.	REDRAWN	6-30-98
	GA. STD. 9003	
G.L.O.	REDRAWN TO MATCH METRIC	4-10-06

DEPARTMENT OF TRANSPORTATION
STATE OF GEORGIA

STANDARD DETAILS OF MARKERS

FEDERAL AID AND STATE RIGHT OF WAY MARKERS

NO SCALE — REV. & REDR. DEC., 1981

DES. ____
DRW. R.M.U.
TRA. G.M.E.
CHK. R.K.C.

(SUBMITTED) _____ STATE ROAD & AIRPORT DESIGN ENGINEER

(APPROVED) _____ CHIEF ENGINEER

NUMBER 9003

GDOT Georgia Department of Transportation | P. I. No. XXXXXXX

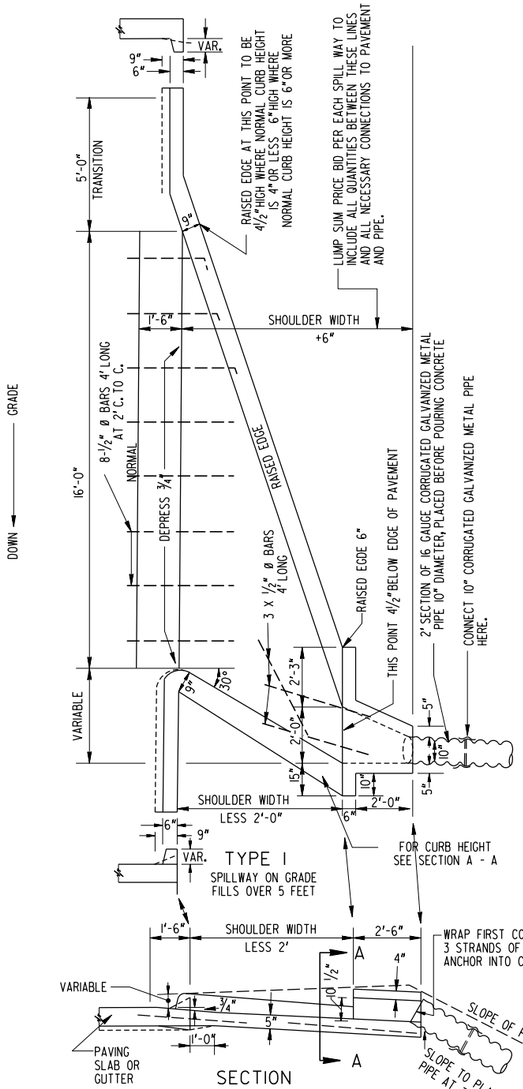

TYPE 1
SPILLWAY ON GRADE FILLS OVER 5 FEET

SECTION

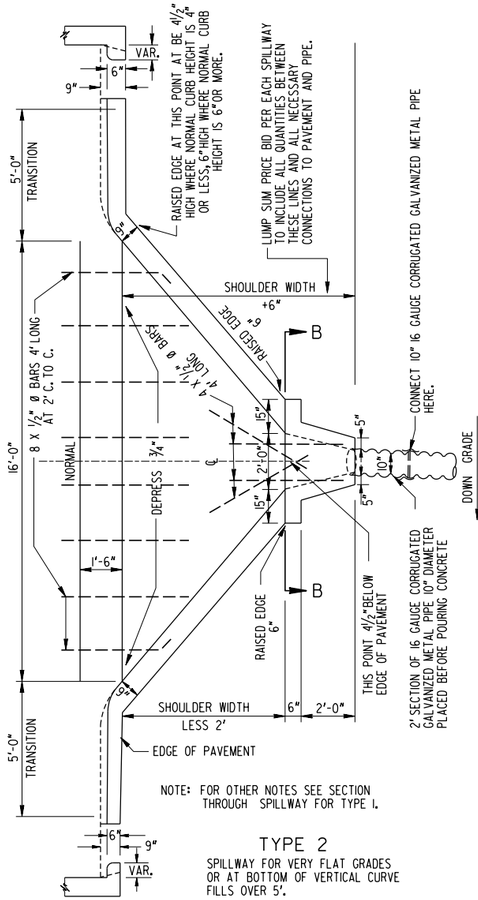

NOTE: FOR OTHER NOTES SEE SECTION THROUGH SPILLWAY FOR TYPE 1.

TYPE 2
SPILLWAY FOR VERY FLAT GRADES OR AT BOTTOM OF VERTICAL CURVE FILLS OVER 5'.

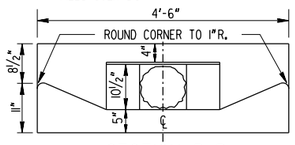

SECTION B-B

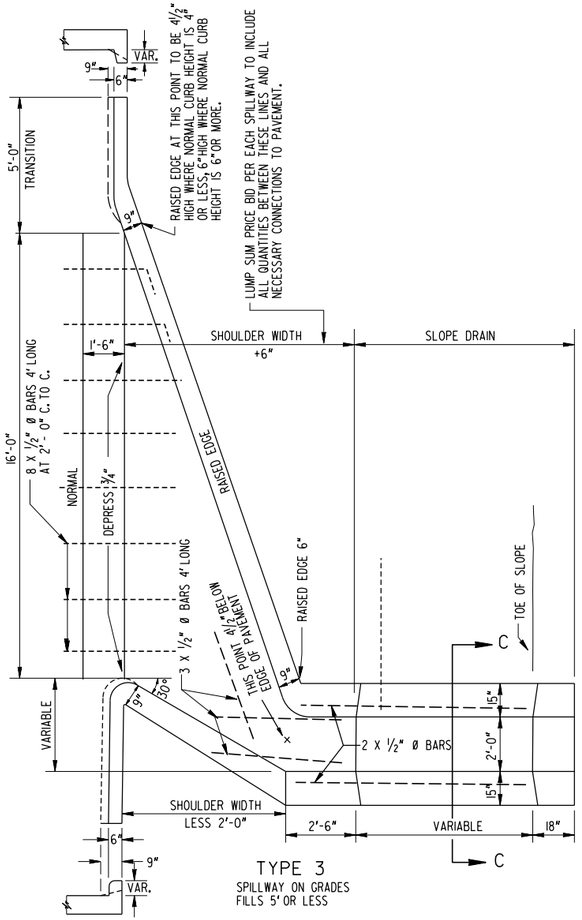

TYPE 3
SPILLWAY ON GRADES FILLS 5' OR LESS

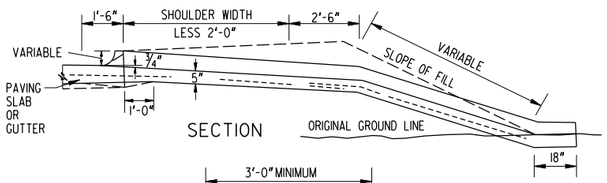

SECTION

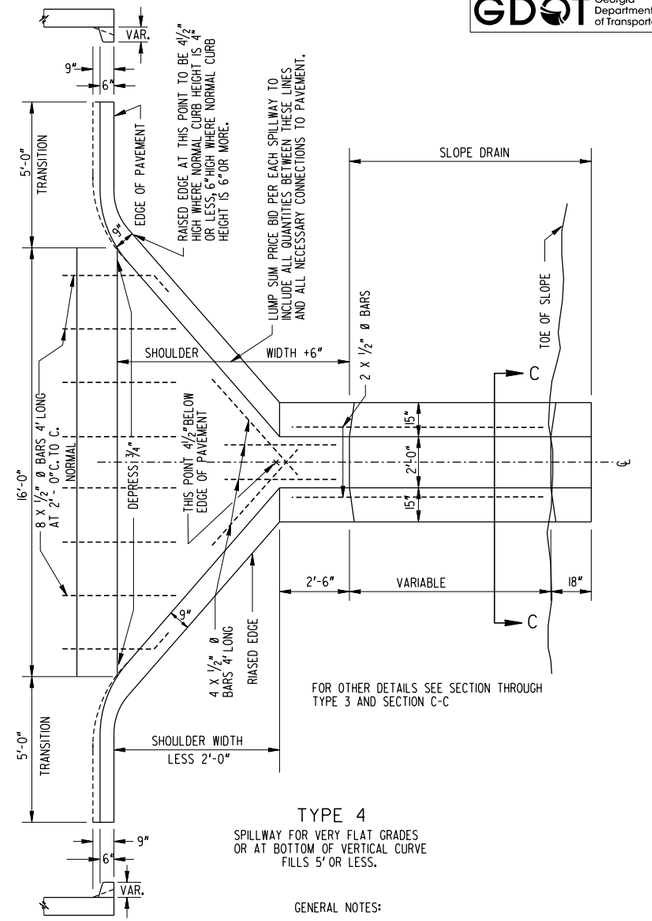

FOR OTHER DETAILS SEE SECTION THROUGH TYPE 3 AND SECTION C-C

TYPE 4
SPILLWAY FOR VERY FLAT GRADES OR AT BOTTOM OF VERTICAL CURVE FILLS 5' OR LESS.

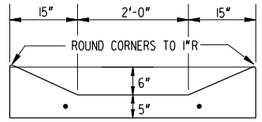

SECTION C-C

GENERAL NOTES:

1. SPECIFICATIONS: GEORGIA STANDARD AND/OR SPECIAL PROVISIONS.
2. CONCRETE SHALL BE ACCORDING TO SEC. 441 OR SAME AS RIGID PAVING.
3. APRON TO BE REQUIRED AT OUTLET OF SLOPE DRAIN PIPE UNLESS CONCRETE DITCH PAVING IS PROVIDED.

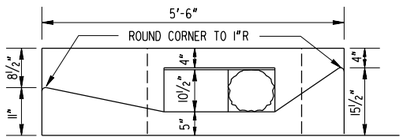

SECTION A-A

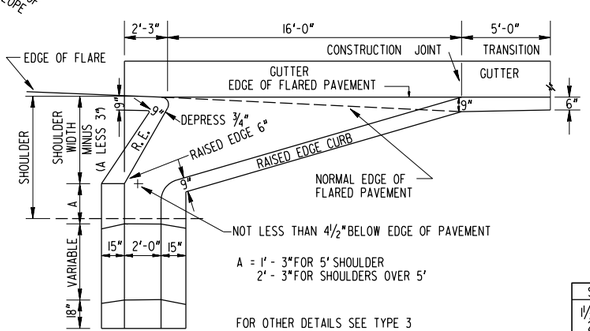

A = 1' - 3" FOR 5' SHOULDER
2' - 3" FOR SHOULDERS OVER 5'

FOR OTHER DETAILS SEE TYPE 3

MODIFICATION OF SPILLWAY FOR USE AT END OF CURB AND GUTTER, WHERE NON-RIGID TYPE OF PAVEMENT IS USED.

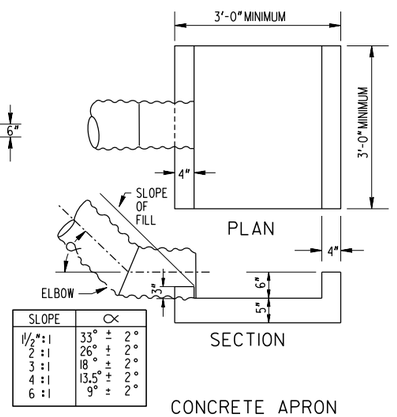

SLOPE	∝
1½":1	33° ± 2°
2 :1	26° ± 2°
3 :1	18° ± 2°
4 :1	13.5° ± 2°
6 :1	9° ± 2°

CONCRETE APRON
TO BE PLACED AT OUTLET OF PIPE

NOTE: MORTAR RUBBLE MASONRY, SAND CEMENT BAG RIPRAP 6" THICK, OR STONE GROUT RIPRAP MAY BE SUBSTITUTED FOR CONCRETE IN CONSTRUCTION OF THE APRON.

QUANTITIES:
0.167 CU. YDS. CLASS "B" CONCRETE

DEPARTMENT OF TRANSPORTATION
STATE OF GEORGIA

STANDARD

CONCRETE SPILLWAYS

(TYPICAL USE: ALONG ROADWAY AT END OF CURB)

NOT TO SCALE | REDRAWN JULY 2024 | FEB. 1981

DATE | REVISION | BY

DES. 7-58 (SUBMITTED) Hayden Loudy
STATE ROAD & AIRPORT DESIGN ENGR.
DRW. R.M.U.
TRA. G.M.E.
CHK. R.K.C.
(APPROVED) Thomas D. Moreland
STATE HIGHWAY ENGINEER

NUMBER 9013

CATCH BASIN (BUILT IN PLACE) ADJACENT TO APPROACH SLAB

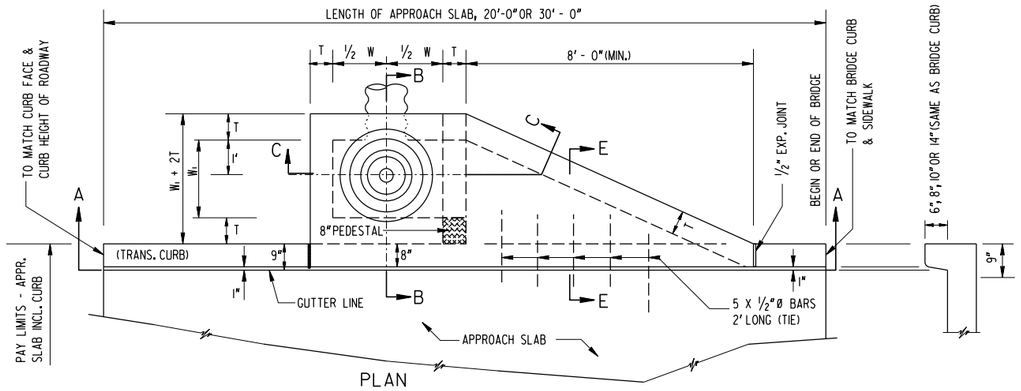

PLAN

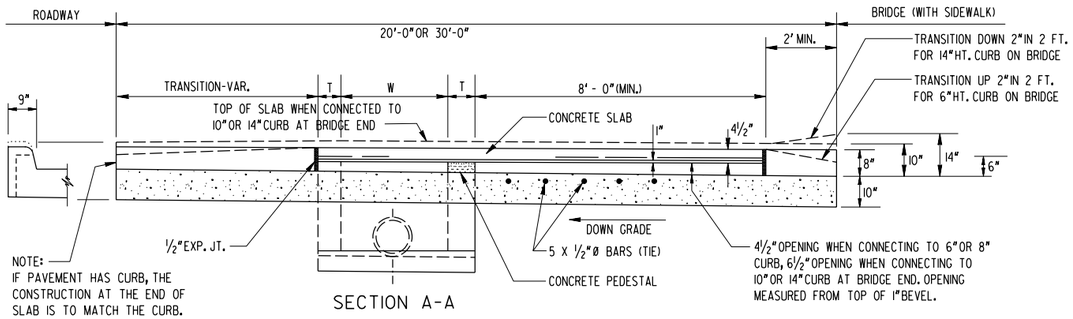

NOTE:
IF PAVEMENT HAS CURB, THE CONSTRUCTION AT THE END OF SLAB IS TO MATCH THE CURB. (OTHERWISE, TRANSITION AS SHOWN ON APPROACH SLAB STANDARD.)

SECTION A-A

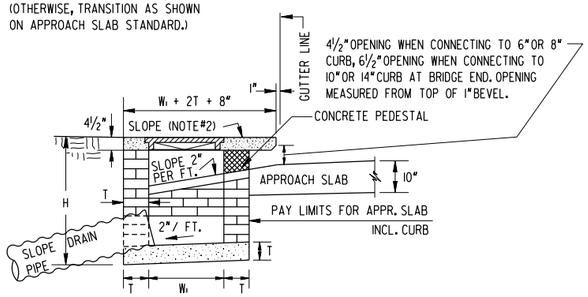

SECTION B-B

W₁ = 2'-0" MINIMUM, 3'-0" MAXIMUM

PIPE SIZE	MIN. H
10"	3'-4"
12"	3'-6"
15"	3'-9"
18"	4'-0"

T = 8" BRICK OR 6" CONCRETE (NON-REINFORCED)

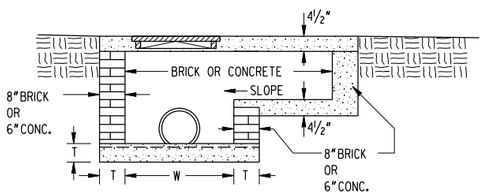

SECTION C-C

W = 2'-0" MINIMUM, 3'-0" MAXIMUM

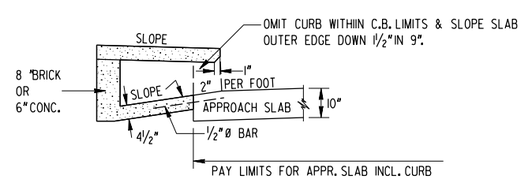

SECTION E-E

REINFORCED CONCRETE TOP SLAB

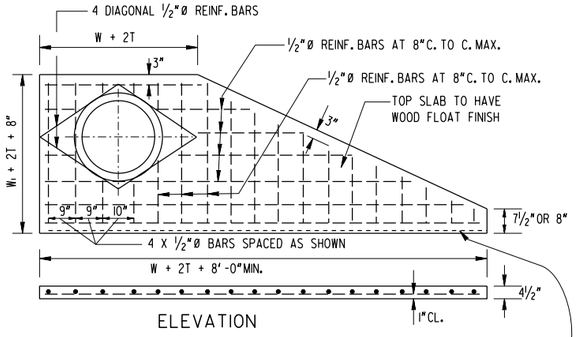

ELEVATION

NOTE:
TOP SLAB MAY BE PRECAST FOR ANY CATCH BASIN

45° 1" BEVEL ON BOTTOM EDGE OF SLAB FACE

CASTING DETAILS

3° TO 7° DRAFTS TYPICAL

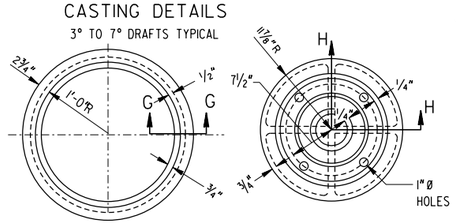

PLAN OF RING

PLAN OF COVER

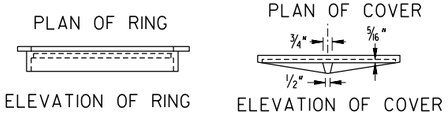

ELEVATION OF RING

ELEVATION OF COVER

NOTE:
CASTINGS SHOWN ARE THE SAME AS REQUIRED FOR OTHER GA. STANDARD CATCH BASINS.

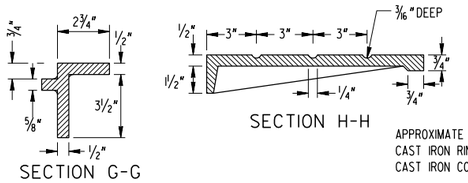

SECTION G-G

SECTION H-H

APPROXIMATE WEIGHTS:
CAST IRON RING: 78 LBS
CAST IRON COVER: 63 LBS

APRON AT OUTLET OF SLOPE DRAIN PIPE

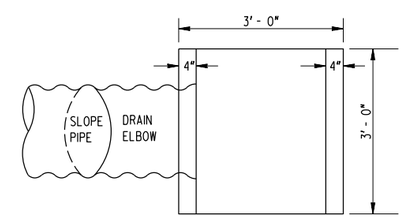

PLAN

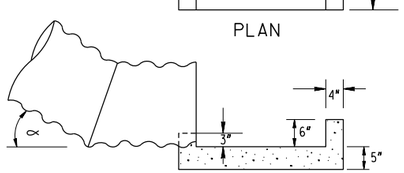

SECTION

QUANTITY:
0.17 CU. YDS. CL. "B" CONC. OR CL. "A" CONC.

ALTERNATE:
APRON MAY BE CONSTRUCTED TO APPROXIMATELY THE SAME DIMENSIONS FROM SAND CEMENT BAG RIP RAP STONE GROUT RIP RAP, OR MORTAR RUBBLE MASONRY.

ELBOW ANGLES:	
FILL SLOPE	∝
2:1 (OR STEEPER)	30° ±
FLATTER THAN 2:1	15° ±

(PRECAST ALTERNATE)

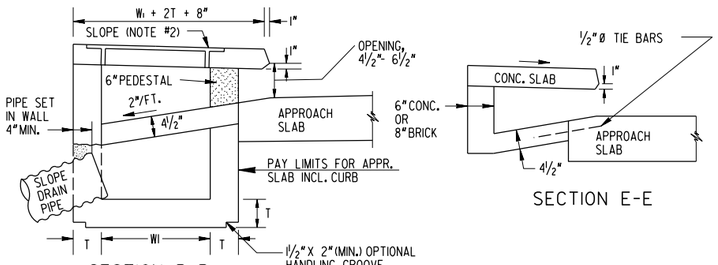

SECTION B-B

SECTION E-E

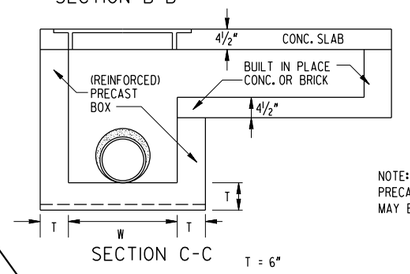

SECTION C-C

T = 6"

NOTE:
DETAILS NOT SHOWN FOR THE PRECAST ALTERNATE WILL BE SIMILAR TO THOSE SHOWN FOR THE BUILT IN PLACE CATCH BASIN.

NOTE:
PRECAST & CAST IN PLACE CONSTRUCTION MAY BE USED IN COMBINATION.

NOTE:
ALL PRECAST CONCRETE BOXES SHALL BE REINFORCED IN BOTTOM AND ALL SIDES THROUGHOUT WITH EITHER A CAGE OF 2/2, 6x6 WELDED WIRE FABRIC OR #4 BARS ON 12" CENTERS, MINIMUM COVER OVER REINFORCING SHALL BE 2" AT ALL POINTS.

GENERAL NOTES:

1. (a) NORMAL USE OF THIS STANDARD IS WHERE CURB OR CURB AND GUTTER IS ADJACENT TO ROADWAY WITH CURB AND/OR SIDEWALK ACROSS BRIDGE. SEE STD. 9017J FOR SPILLWAYS (RURAL SECTION TYP.).
   (B) THE LOCATION OF GUARDRAIL SHOULD BE DETERMINED BEFORE CATCH BASIN IS SPECIFIED; IF TOP SLAB CONFLICTS WITH GUARDRAIL POSTS, DRAINAGE SHOULD BE CARRIED ACROSS THE APPROACH SLAB TO A ROADWAY DROP INLET.
2. CATCH BASIN TOP SLAB SHALL BE SLOPED ¼" PER FT. TOWARDS THE APPROACH SLAB OR SHALL BE SLOPED TO MATCH ADJACENT SURFACES OR TO GIVE THE DESIRED TRANSITION BETWEEN THE ROADWAY AND BRIDGE SIDEWALK GRADES AND CURB HEIGHTS.
3. SEE SEPARATE STANDARD (9017K OR 9017L TYPICAL) FOR APPROACH SLAB DETAILS.
4. A ½" EXPANSION JOINT SHALL BE REQUIRED AT ALL POINTS WHERE A CATCH BASIN INTERCEPTS CONCRETE SIDEWALK.
5. SPECIFICATIONS: GEORGIA STANDARD, CURRENT EDITION, AND SUPPLEMENTS THERETO.

GDOT Georgia Department of Transportation | P. I. No. XXXXXXX

DEPARTMENT OF TRANSPORTATION
STATE OF GEORGIA

STANDARD
CATCH BASIN
(PRECAST OR BUILT IN PLACE)
ADJACENT TO APPROACH SLAB

GEN. REV.	6-25-85
REVISION	DATE
R.M.U.	
BY	

NOT TO SCALE — REDRAWN JULY 2024 — AUGUST, 1983

DES. R.M.U.
DRW. R.M.U.
TRA. G.M.E.
CHK. R.K.C.

(SUBMITTED) STATE ROAD & AIRPORT DESIGN ENGR.
(APPROVED) STATE HIGHWAY ENGINEER

NUMBER 9017C

GDOT Georgia Department of Transportation | P. I. No. XXXXXXX

TYPE 1 SPILLWAY (TYPICAL USE: ON GRADES, FILLS OVER 5 FT.)

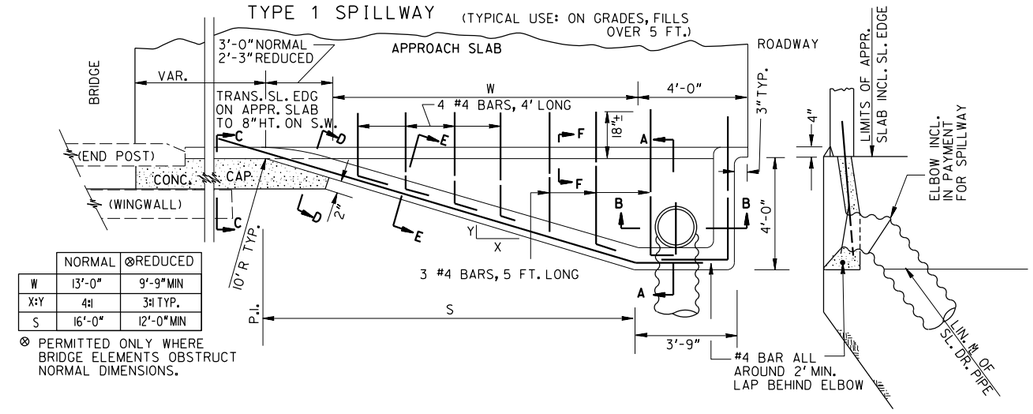

	NORMAL	⊗REDUCED
W	13'-0"	9'-9" MIN
X:Y	4:1	3:1 TYP.
S	16'-0"	12'-0" MIN

⊗ PERMITTED ONLY WHERE BRIDGE ELEMENTS OBSTRUCT NORMAL DIMENSIONS.

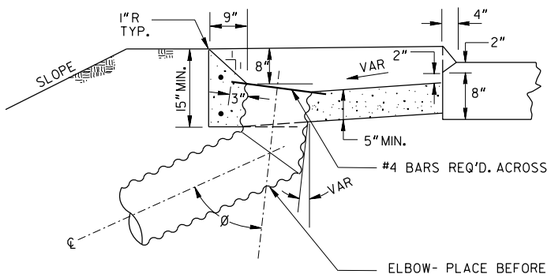

SECTION A-A

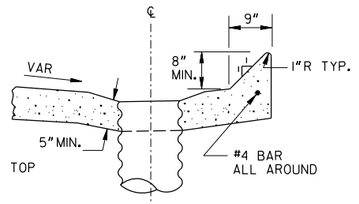

SECTION B-B

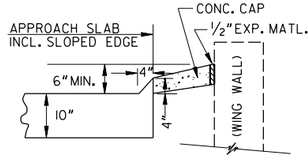

SECTION C-C

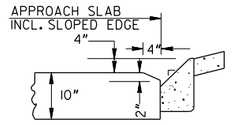

SECTION D-D

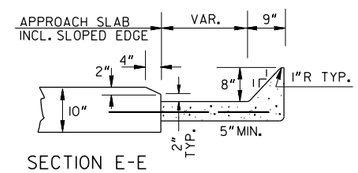

SECTION E-E

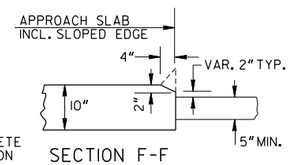

SECTION F-F

TYPE 3 SPILLWAY (TYPICAL USE: ON GRADES, FILLS 5 FT. OR LESS)

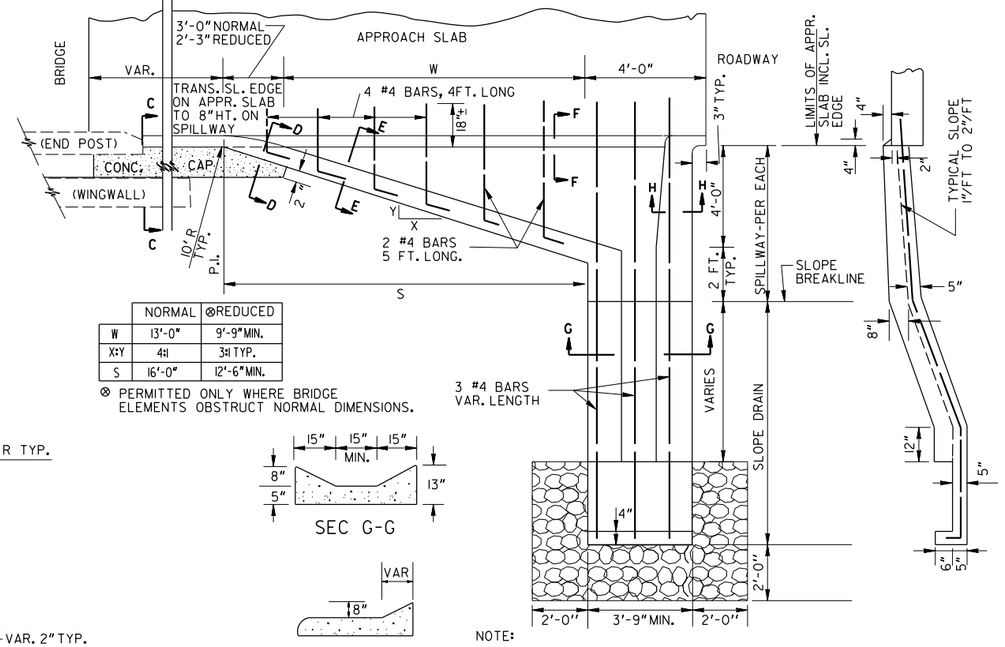

	NORMAL	⊗REDUCED
W	13'-0"	9'-9" MIN.
X:Y	4:1	3:1 TYP.
S	16'-0"	12'-6" MIN.

⊗ PERMITTED ONLY WHERE BRIDGE ELEMENTS OBSTRUCT NORMAL DIMENSIONS.

SEC G-G

SEC H-H

NOTE:

TP 3, 18 IN. RIP RAP AND WOVEN PLASTIC FILTER FABRIC ARE TO BE INSTALLED 2 FT WIDE ALL AROUND OUTLET APRON

OUTLET APRON

TP 3, 18 IN. RIP RAP AND WOVEN PLASTIC FILTER FABRIC ARE TO BE INSTALLED 2 FT WIDE ALL AROUND OUTLET APRON

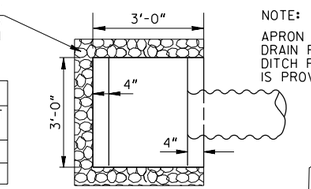

NOTE:

APRON IS REQUIRED AT ALL SLOPE DRAIN PIPE OUTLETS UNLESS CONCRETE DITCH PAVING OR RIP RAP PROTECTION IS PROVIDED.

NOTE: APRON CONSTRUCTED FROM SAND CEMENT BAG RIP RAP, MORTAR RUBBLE MASONRY OR STONE GROUT RIP RAP MAY BE SUBSTITUTED FOR CONCRETE APRON.

SLOPE DRAIN PIPE DIAMETERS	
PIPE I.D. (INCHES)	AREA DRAINING INTO SPILLWAY - (SQ. FT.)
15"	TO 24, 100
18"	OVER 24, 100

SLOPE DRAIN PIPE ELBOW ANGLES		
EMBANKMENT SLOPE	ELBOW IN SPILLWAY	ELBOW AT OUTLET
STEEPER THAN 4:1	ϕ = 60° ±	α = 30° ±
4:1 OR FLATTER	ϕ = 75° ±	α = 15° ±

TYPE 4 SPILLWAY (TYPICAL USE: IN SAGS OR LOW AREAS, FILLS 5 FT. OR LESS)

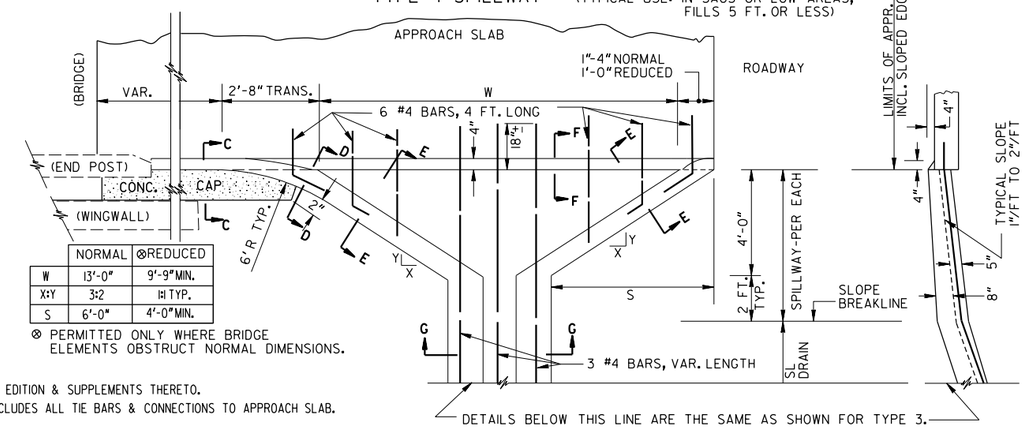

	NORMAL	⊗REDUCED
W	13'-0"	9'-9" MIN.
X:Y	3:2	1:1 TYP.
S	6'-0"	4'-0" MIN.

⊗ PERMITTED ONLY WHERE BRIDGE ELEMENTS OBSTRUCT NORMAL DIMENSIONS.

DETAILS BELOW THIS LINE ARE THE SAME AS SHOWN FOR TYPE 3.

TYPE 2 SPILLWAY

(TYPICAL USE: IN SAGS OR LOW AREAS, FILLS OVER 5 FT.)

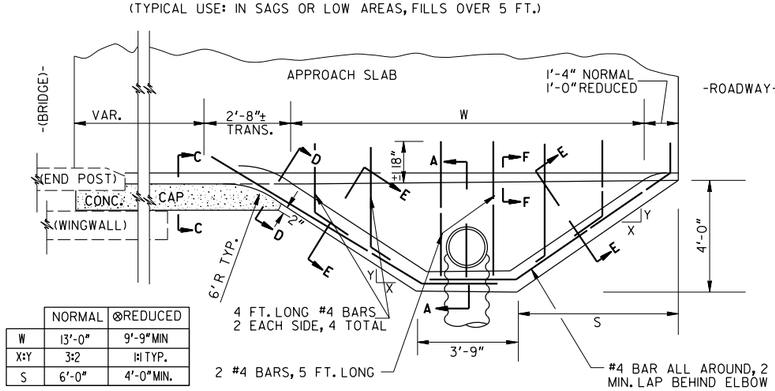

	NORMAL	⊗REDUCED
W	13'-0"	9'-9" MIN
X:Y	3:2	1:1 TYP.
S	6'-0"	4'-0" MIN.

⊗ PERMITTED ONLY WHERE BRIDGE ELEMENTS OBSTRUCT NORMAL DIMENSIONS.

GENERAL NOTES:

1. SPECIFICATIONS: GA. STANDARD, CURRENT EDITION & SUPPLEMENTS THERETO.
2. PAYMENT FOR SPILLWAY (ANY TYPE) INCLUDES ALL TIE BARS & CONNECTIONS TO APPROACH SLAB.

NOTE: PAYMENT FOR SPILLWAY INCLUDES INDICATED BLOCKOUTS EXCEPT WHERE IT HAS BEEN VERIFIED THAT GUARDRAIL IS NOT REQUIRED.

✳IF GUARDRAIL IS WARRANTED AT THE TRAILING END OF 4 OR MORE LANES, BLOCKOUTS FLAGGED WITH AN ASTERISK ARE OMITTED.

BLOCKOUT LOCATIONS FOR GUARDRAIL POST

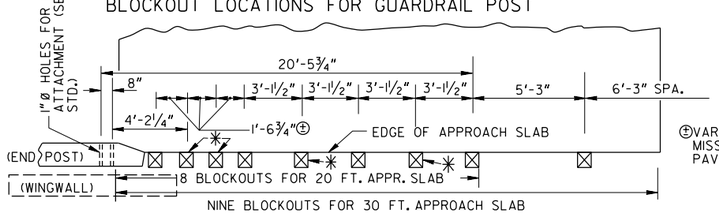

±VARIED TO MISS BRIDGE PAV. REST

DATE	REVISION	BY
07-01-26	ADDED RIP RAP APRON	PN
2-28-95	GENERAL REVISION	RHG
4-27-89	BLOCKOUT SPA.	KLJ

DEPARTMENT OF TRANSPORTATION
STATE OF GEORGIA

STANDARD CONCRETE SPILLWAYS

(ADJACENT TO APPROACH SLABS)

NOT TO SCALE | REDRAWN JULY 2024 | JUNE 1985

DES. R.M.U.
DRW. R.M.U.
TRA. G.M.E.
CHK. R.K.C.

(SUBMITTED) Daniel C. Pass
STATE DESIGN POLICY ENGINEER

(APPROVED) Margaret G. Pirkle
CHIEF ENGINEER

NUMBER 9017J

GDOT Georgia Department of Transportation | P. I. No. XXXXXXX

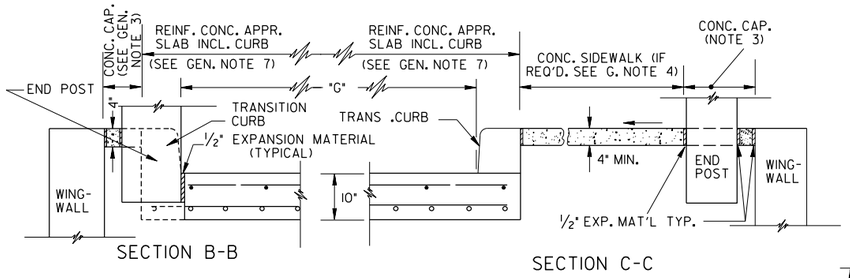

SECTION B-B

SECTION C-C

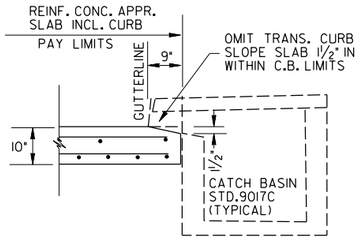

SECTION D-D (WITH CATCH BASIN)

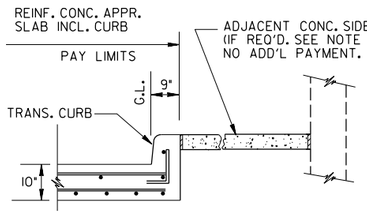

SECTION D-D (WITHOUT CATCH BASIN)

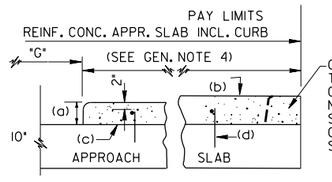

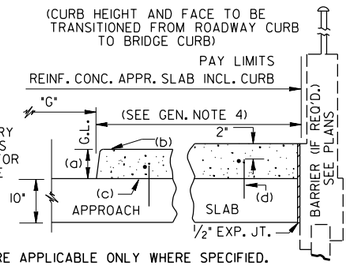

NOTE: SIDEWALK ON APPROACH SLAB DETAILS ARE APPLICABLE ONLY WHERE SPECIFIED.

(a) - HEIGHT & BATTER TRANSITIONED FROM ROAD CURB FACE TO BRIDGE CURB FACE.
(b) - SURFACE FINISH SAME AS SIDEWALK, GRADE & SLOPE COMPATIBLE WITH ROADWAY/BRIDGE SIDEWALK.
(c) - CONSTRUCTION JOINT
(d) - DOUBLE ROW OF 12" LONG #4 DOWELS AT 1'-7" O.C. WITH #4 LONGIT. BAR AT TOP.

TYPICAL DETAILS OF SIDEWALKS ON APPROACH SLABS

NOTE: TYPICAL USE OF ABOVE DETAILS IS WHERE STAGE CONSTRUCTION NECESSITATES USE OF SIDEWALK AREA FOR TRAVEL LANE PRIOR TO CONSTRUCTION OF SIDEWALK.

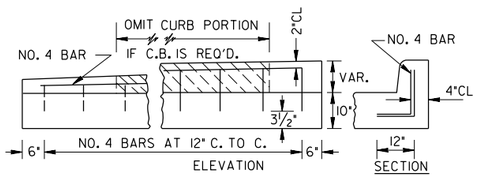

DETAIL SHOWING REINFORCEMENT FOR TRANSITION CURB

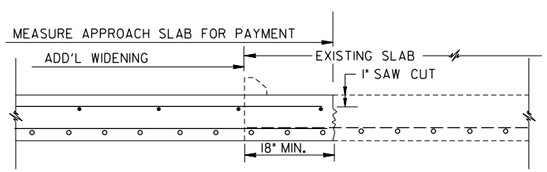

NEW TO EXISTING APPROACH SLAB CONNECTION

REMOVE CONCRETE FROM 18" STRIP WITH CARE TO MAKE CUT AS VERTICAL AS POSSIBLE. EXPOSED BARS TO BE CUT AND BENT TO FIT WITH ALL SCALE AND RUST REMOVED. EPOXY IS REQUIRED BETWEEN NEW AND EXISTING CONCRETE. EXISTING REINFORCING SHALL EXTEND 15" MIN. INTO NEW SECTION. PAYMENT FOR NEW SLAB INCLUDES ALL WORK HEREIN DESCRIBED.

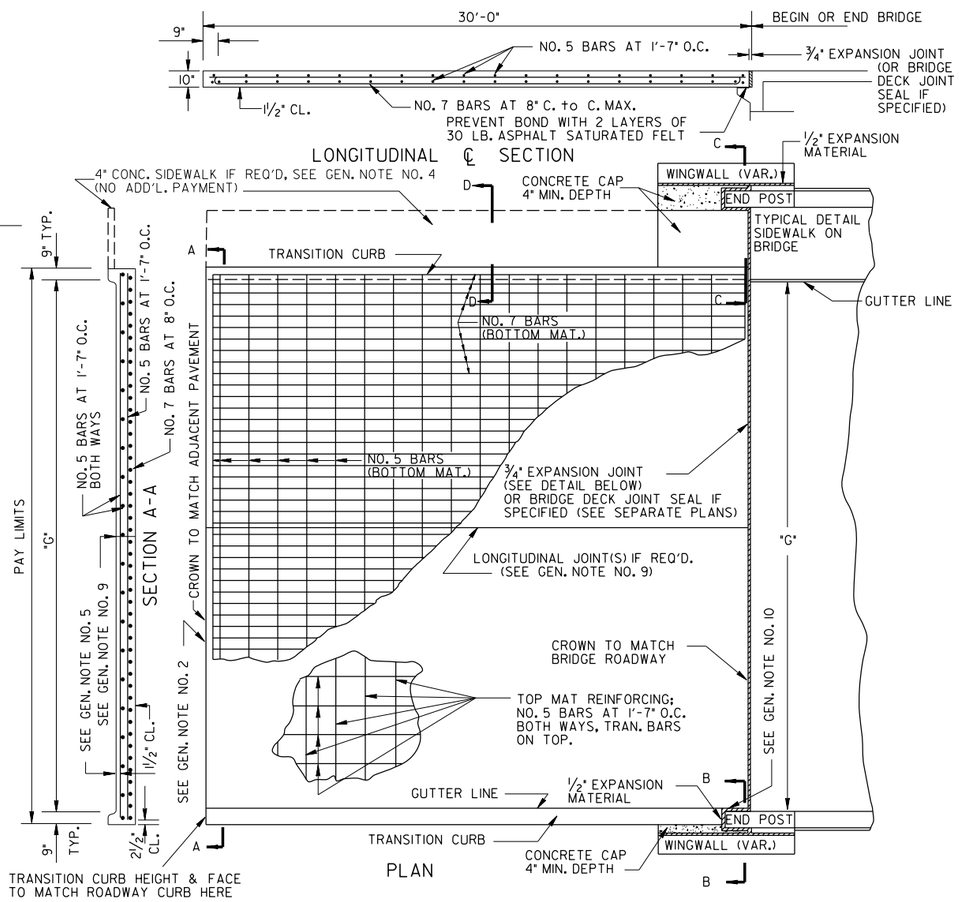

NOTE:
CATCH BASIN (STD. 9017 C TYP.) ADJACENT TO THE APPROACH SLAB IS NOT SHOWN, BUT MAY BE SPECIFIED ON ONE OR BOTH SIDES AS NEEDED. APPROACH SLAB QUANTITIES OR PAY ITEM WILL NOT BE AFFECTED BY CATCH BASIN REQUIREMENTS. APPROACH SLABS PER THIS STANDARD SHALL INCLUDE CURB IN ANY CASE.

SKEWED SLAB: LONGITUDINAL BARS-TRANSVERSE BARS-NOMINAL LENGTH AND NUMBER REQUIRED SAME AS FOR UNSKEWED SLAB.

TRANSVERSE BARS-NUMBER REQUIRED SAME AS FOR UNSKEWED SLAB. NOMINAL LENGTH OF SKEW = UNSKEWED NOMINAL LENGTH DIVIDED BY SIN Ø ROUNDED TO NEAREST INCH.

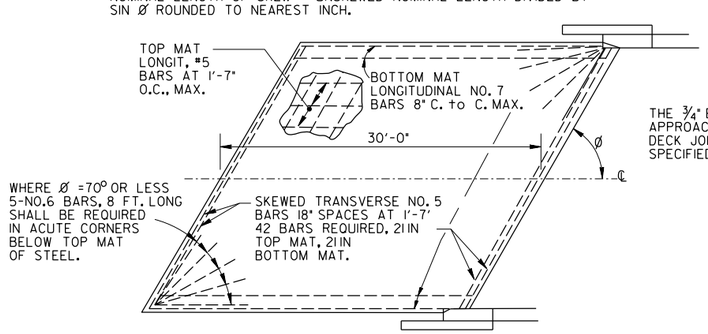

SKEW MODIFICATION SKETCH

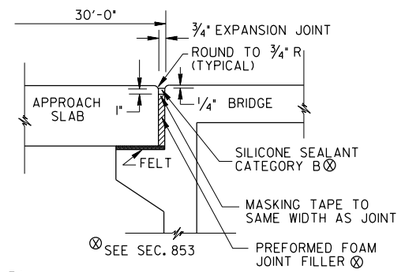

¾" EXPANSION JOINT DETAIL

THE ¾" EXPANSION JOINT SHOWN ABOVE IS REQUIRED BETWEEN APPROACH SLAB & BRIDGE AT ALL LOCATIONS EXCEPT WHERE BRIDGE DECK JOINT SEAL (SEPARATE PLAN DETAILS) OR OTHER JOINT TYPE IS SPECIFIED.

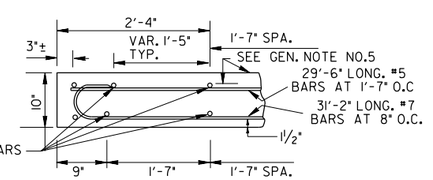

TYPICAL LONGITUDINAL END VIEW

QUANTITIES & REINFORCEMENT FOR TYPICAL SLAB SIZES **					
		BOTTOM MAT REINF.		TOP MAT REINF.	
"G"	SQ. YDS. OF APPR. SLAB = (G+1.5') x 30 / 9	31'-2" LONG #7 LONGIT. BARS -NUMBER- (=1.5G + 2.75)	21 TRANSV. #5 BARS -LENGTH- (=G + 13")	29'-6" LONG #5 LONGIT. BARS -NUMBER- =⅔ (G+13")+1	21 TRANSV. #5 BARS -LENGTH- (=G + 13")
28'-0"	98.33	45	29'-1"	20	29'-1"
32'-0"	111.67	51	33'-1"	22	33'-1"
36'-0"	125.00	57	37'-1"	25	37'-1"
40'-0"	138.33	63	41'-1"	27	41'-1"
42'-0"	145.00	66	43'-1"	29	43'-1"
48'-0"	162.50	75	49'-1"	32	49'-1"
52'-0"	178.33	81	53'-1"	35	53'-1"
58'-0"	198.33	90	59'-1"	39	59'-1"
60'-0"	205.00	93	61'-1"	40	62'-1"
62'-0"	211.67	96	63'-1"	41	63'-1"
64'-0"	218.33	99	65'-1"	43	66'-1"
66'-0"	225.00	102	67'-1"	44	67'-1"

** DATA ABOVE ARE BASED UPON COMMON WIDTHS. WHERE OTHER "G" DIMENSIONS ARE ENCOUNTERED, THE FORMULAE AT COLUMN TOPS MAY BE USED TO COMPUTE THE NEEDED QUANTITIES. WHERE IT IS NECESSARY TO MODIFY APPROACH SLAB TO EXTEND UNDER SIDEWALK (DETAILS AT LEFT CENTER), THE FORMULAE SHALL BE ADJUSTED TO REFLECT SIDEWALK WIDTHS RATHER THAN TRANSITION CURB WIDTHS.

GENERAL NOTES:

1. SPECIFICATIONS: GEORGIA STANDARD, CURRENT EDITION, AND SUPPLEMENTS THERETO.
2. WHERE PORTLAND CEMENT CONCRETE PAVEMENT IS TO BE USED FOR ROADWAY PAVING, DOWEL BARS WILL BE INSTALLED IN THE APPROACH SLAB PER STANDARD 5046H. PAYMENT FOR THE APPROACH SLAB WILL INCLUDE THESE DOWELS WHEN THE APPROACH SLAB IS CONSTRUCTED BEFORE THE PCC PAVEMENT CONSTRUCTION.
3. ALL AREAS BETWEEN WINGWALL AND APPROACH SLAB SHALL BE CAPPED WITH 4" MIN. CONCRETE AND/OR CONC. SIDEWALK WITH HOLES BLOCKED OUT FOR GUARDRAIL POST NSTALLATIONS (PER STD. 4012B). PAYMENT FOR APPROACH SLAB INCLUDES THE ½" EXPANSION MATERIAL & CONCRETE CAP OR CONCRETE SIDEWALK WITH THE BLOCKED OUT HOLES.
4. WHERE SIDEWALK IS CARRIED ACROSS THE BRIDGE, PAYMENT FOR THE APPROACH SLAB SHALL INCLUDE CONCRETE SIDEWALK ADJACENT TO OR ON THE APPROACH SLAB. THIS SIDEWALK MAY BE CONSTRUCTED FROM CL. A CONCRETE OR PER SECTION 441. GRADE OF SIDEWALK SHALL BE ADJUSTED TO FIT ADJACENT ELEMENTS AND WIDTH SHALL BE EQUAL TO ADJOINING SIDEWALK UNLESS OTHERWISE APPROVED BY THE ENGINEER.
5. COVER OVER TOP MAT OF REINFORCING WILL MATCH THAT OF THE BRIDGE DECK.
6. WHERE APPROACH SLAB IS INTERCEPTED BY END POST OR WHERE TRANSITION CURB IS INTERCEPTED BY CATCH BASIN, EXTERIOR BARS WILL BE SHORTENED AS NEEDED TO GIVE A 3" CLEARANCE TO STRUCTURE.
7. PAY AREA FOR APPROACH SLAB IS COMPUTED AS THE PRODUCT: (GROSS WIDTH OF REINFORCED SLAB) x (SLAB LENGTH) WITH NO DEDUCTIONS MADE FOR AREAS OCCUPIED BY THE END POST & EXPANSION JOINT OR BY DRAINAGE STRUCTURES, AND NO ADDITIONS MADE FOR SIDEWALKS OR OTHER ITEMS WHEN REQUIRED WITH THE APPROACH SLAB.
8. SEE SEPARATE PLAN DETAILS FOR SUBBASE OR OTHER MATERIALS UNDER THE APPROACH SLAB. IF "CS" CONC. OR P.C. CONC. SUBBASE IS USED, CLEAR POLYETHYLENE SHEETING 8 MILS MIN. THICKNESS, WITH A 6" OVERLAP, UNIFORMLY LAYED SHALL BE REQUIRED UNDER THE APPROACH SLAB TO PREVENT BONDING. POLYETHYLENE SHEETING SHALL BE NEW, UNUSED AND FREE OF HOLES, RIPS AND TEARS.
9. ALL APPROACH SLABS EXCEEDING 42' IN WIDTH WILL CONTAIN A LONGITUDINAL CONSTRUCTION JOINT, SLABS EXCEEDING 60' AND 90' IN WIDTH SHALL CONTAIN 2 AND 3 LONGITUDINAL CONSTRUCTION JOINTS RESPECTIVELY. SECTIONS BETWEEN JOINTS OR BETWEEN A JOINT AND SLAB EDGE SHALL NOT BE LESS THAN 12' OR MORE THAN 30' WIDE. REINFORCEMENT STEEL REMAINS UNCHANGED AND SHALL EXTEND THRU JOINTS. JOINTS SHALL BE LOCATED AT LANE LINES TO PROVIDE OFFSET FROM WHEEL PATHS.
10. IF BRIDGE DECK JOINT SEAL IS USED BETWEEN APPROACH SLAB AND BRIDGE, THE END OF SLAB ADJACENT TO END POST WILL BE SEALED WITH LOW MODULUS SILICONE SEALANT.

NOTE: THIS STANDARD REPLACES STANDARD 9017 F

DEPARTMENT OF TRANSPORTATION
STATE OF GEORGIA

STANDARD

REINFORCED CONCRETE APPROACH SLAB

30 FT. LENGTH

TYPICAL USE: CURB OR CURB & GUTTER ADJACENT TO ROADWAY AND/OR SIDEWALK ACROSS BRIDGE

NOT TO SCALE | REDRAWN JULY 2024 | JUNE 1985

DATE / REVISION

BY: DES. RMU, DRW. RMU, TRA. GME, CHK. RKC

(SUBMITTED) Floyd E. Hardy
STATE ROAD & AIRPORT DESIGN ENGR

(APPROVED) Hal Ruiseau
STATE HIGHWAY ENGINEER

NUMBER 9017K

GDOT Georgia Department of Transportation | P. I. No. XXXXXXX

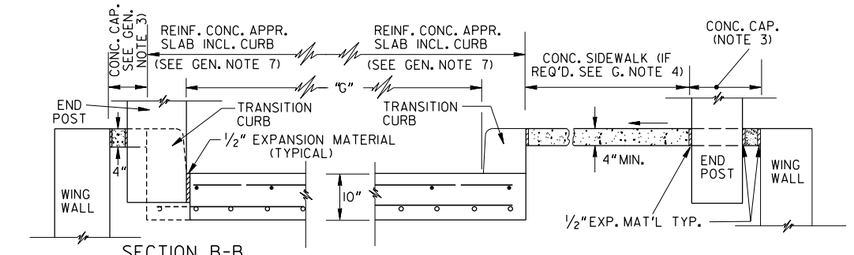

SECTION B-B

NOTE: LENGTH OF ALL EXTERIOR BARS DEPENDENT UPON BRIDGE DESIGN

SECTION C-C

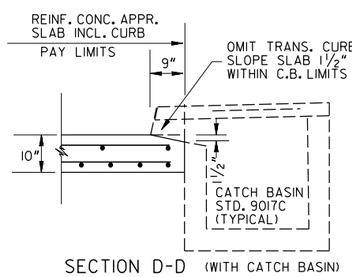

SECTION D-D (WITH CATCH BASIN)

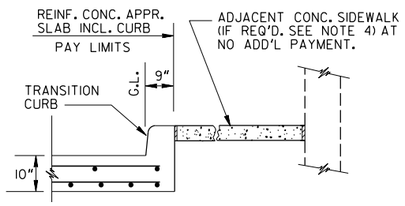

SEC. D-D (WITHOUT CATCH BASIN)

(CURB HEIGHT AND FACE TO BE TRANSITIONED FROM ROADWAY CURB TO BRIDGE CURB)

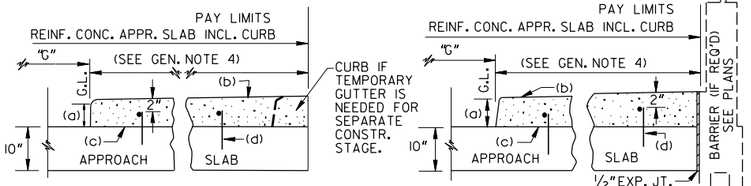

NOTE: SIDEWALK ON APPROACH SLAB DETAILS ARE APPLICABLE ONLY WHERE SPECIFIED.

(α) - HEIGHT & BATTER TRANSITIONED FROM ROAD CURB FACE TO BRIDGE CURB FACE.
(ℬ) - SURFACE FINISH SAME AS SIDEWALK. GRADE & SLOPE COMPATIBLE WITH ROADWAY/BRIDGE SIDEWALK.
(℄) - TYPICAL CONSTRUCTION JOINT
(⊗) - DOUBLE ROW OF 12"LONG #4 DOWELS AT 1'-7"O.C. WITH #4 LONGIT. BAR AT TOP.

TYPICAL DETAILS OF SIDEWALKS ON APPROACH SLABS

NOTE: TYPICAL USE OF ABOVE DETAIL IS WHERE STAGE CONSTRUCTION NECESSITATES USE OF SIDEWALK AREA FOR TRAVEL LANE PRIOR TO CONSTRUCTION OF SIDEWALK.

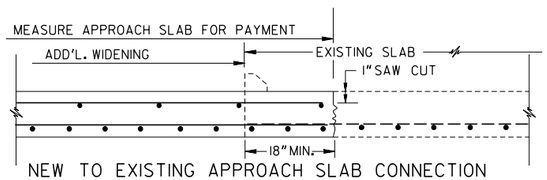

NEW TO EXISTING APPROACH SLAB CONNECTION

REMOVE CONCRETE FROM 18"STRIP WITH CARE TO MAKE CUT AS VERTICAL AS POSSIBLE. EXPOSED BARS TO BE CUT AND BENT TO FIT WITH ALL SCALE AND RUST REMOVED. EPOXY IS REQUIRED BETWEEN NEW AND EXISTING CONCRETE. EXISTING REINFORCING SHALL EXTEND 15"MIN. INTO NEW SECTION. PAYMENT FOR NEW SLAB INCLUDES ALL WORK HERE DESCRIBED.

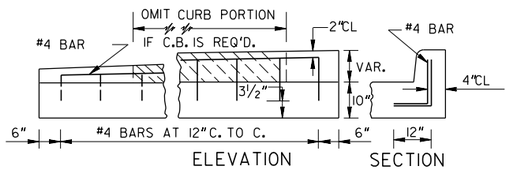

DETAIL SHOWING REINFORCEMENT FOR TRANSITION CURB

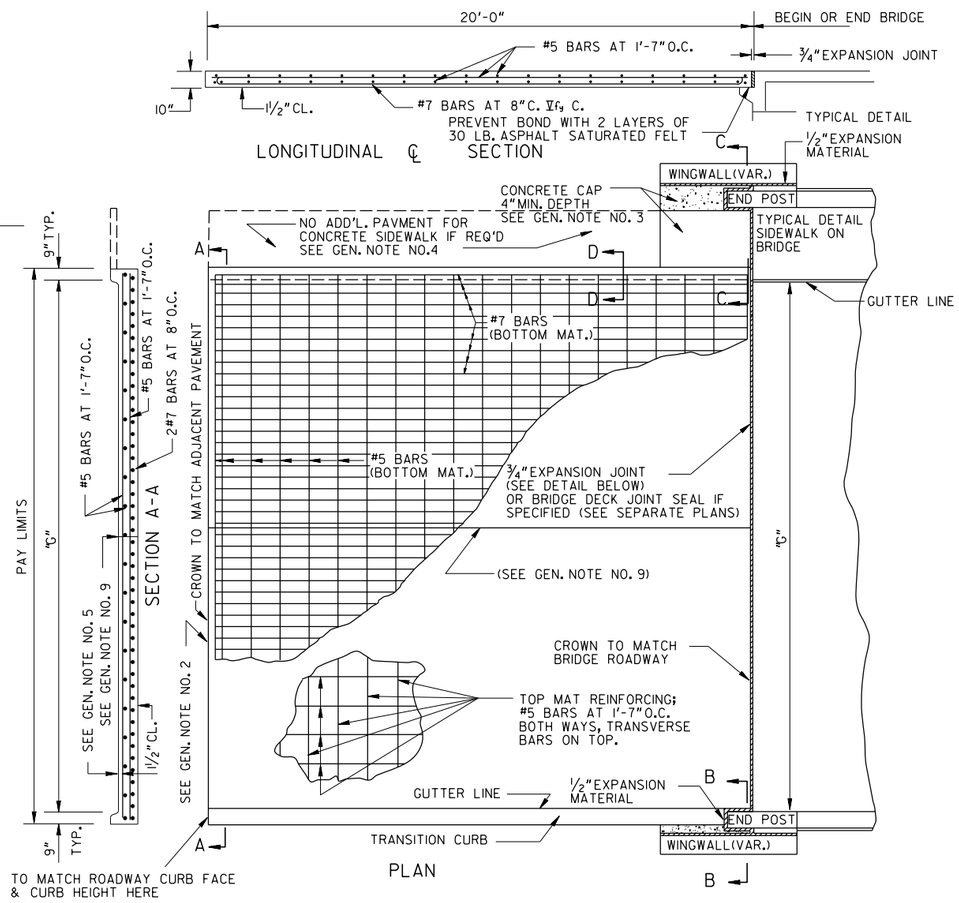

NOTE:
CATCH BASIN (STD. 9017C TYP.) ADJACENT TO THE APPROACH SLAB IS NOT SHOWN, BUT MAY BE SPECIFIED ON ONE OR BOTH SIDES AS NEEDED. A PPROACH SLAB QUANTITIES OR PAY ITEM WILL NOT BE AFFECTED BY CATCH BASIN REQUIREMENTS. APPROACH SLABS PER THIS STANDARD SHALL INCLUDE CURB IN ANY CASE.

NOTES FOR SKEWED SLAB:
LONGITUDINAL BARS-NOMINAL LENGTH AND NUMBER REQ'D SAME AS FOR UNSKEWED SLAB.

TRANSVERSE #5 BARS NUMBER REQ'D SAME AS FOR UNSKEWED SLAB. NOMINAL LENGTH ON SKEW = UNSKEWED LENGTH DIVIDED BY SIN θ.

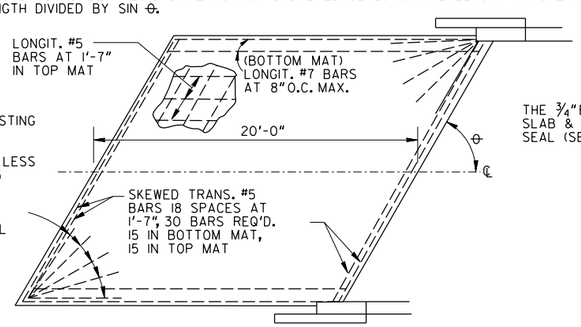

SKEW MODIFICATION SKETCH

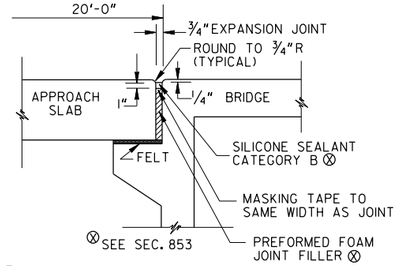

¾" EXPANSION JOINT DETAIL

THE ¾"EXPANSION JOINT SHOWN ABOVE IS REQUIRED BETWEEN APPROACH SLAB & BRIDGE AT ALL LOCATIONS EXCEPT WHERE BRIDGE DECK JOINT SEAL (SEPARATE PLAN DETAILS) OR OTHER JOINT TYPE IS SPECIFIED.

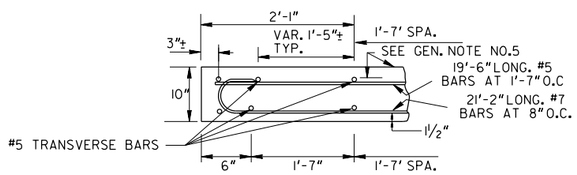

TYPICAL LONGITUDINAL END VIEW

QUANTITIES & REINFORCING FOR TYPICAL SLAB SIZES **					
"G"	SQ. YDS. OF APPR. SLAB = 20 (G+1.5') / 9	BOTTOM MAT REINF.		TOP MAT REINF.	
		21'-2"LONG #7 LONGIT. BARS NUMBER = 1.5G + 2.75	15 TRANSV. #5 BARS LENGTH = G + 13"	19'-6"LONG #5 LONGIT. BARS NUMBER = 8/9(G+13") + 1	15 TRANSV. #5 BARS LENGTH (=G + 13")
28'-0"	65.56	45	29'-1"	20	29'-1"
32'-0"	74.44	51	33'-1"	22	33'-1"
36'-0"	83.33	57	37'-1"	25	37'-1"
40'-0"	92.22	63	41'-1"	27	41'-1"
42'-0"	96.67	66	43'-1"	29	43'-1"
46'-0"	105.55	72	47'-1"	31	47'-1"
48'-0"	110.00	75	49'-1"	32	49'-1"

** DATA ABOVE ARE BASED UPON COMMON WIDTHS. WHERE OTHER "G" DIMENSIONS ARE ENCOUNTERED, THE FORMULAE AT COLUMN TOP'S MAY BE USED TO COMPUTE THE NEEDED QUANTITIES. WHERE IT IS NECESSARY TO MODIFY APPROACH SLAB TO EXTEND UNDER SIDEWALK (DETAILS AT LEFT CENTER), THE FORMULAE SHALL BE ADJUSTED TO REFLECT SIDEWALK WIDTHS RATHER THAN TRANSITION CURB WIDTH.

GENERAL NOTES:

1. SPECIFICATIONS: GEORGIA STANDARD, CURRENT EDITION, AND SUPPLEMENTS THERETO.
2. WHERE PORTLAND CEMENT CONCRETE PAVEMENT IS TO BE USED FOR ROADWAY PAVING, DOWEL BARS WILL BE INSTALLED IN THE APPROACH SLAB PER STANDARD 5046-H. PAYMENT FOR THE APPROACH SLAB WILL INCLUDE THESE DOWELS WHEN THE APPROACH SLAB IS CONSTRUCTED BEFORE THE PCC PAVEMENT CONSTRUCTION.
3. ALL AREAS BETWEEN WINGWALL AND APPROACH SLAB SHALL BE CAPPED WITH 4"MIN. CONCRETE AND/OR CONC. SIDEWALK WITH HOLES BLOCKED OUT FOR GUARDRAIL POST INSTALLATIONS (PER STD. 4012B), PAYMENT FOR APPROACH SLAB INCLUDES THE ½"EXPANSION MATERIAL & CONCRETE CAP OR CONCRETE SIDEWALK WITH THE BLOCKED OUT HOLES.
4. WHERE SIDEWALK IS CARRIED ACROSS THE BRIDGE, PAYMENT FOR THE APPROACH SLAB SHALL INCLUDE CONCRETE SIDEWALK ADJACENT TO OR ON THE APPROACH SLAB. THIS SIDEWALK MAY BE CONSTRUCTED FROM CL. A CONCRETE OR PER SECTION 441. GRADE OF SIDEWALK SHALL BE ADJUSTED TO FIT ADJACENT ELEMENTS AND WIDTH SHALL BE EQUAL TO ADJOINING SIDEWALK UNLESS OTHERWISE APPROVED BY THE ENGINEER.
5. COVER OVER TOP MAT OF REINFORCING WILL MATCH THAT OF THE BRIDGE DECK.
6. WHERE APPROACH SLAB IS INTERCEPTED BY END POST OR WHERE TRANSITION CURB IS INTERCEPTED BY CATCH BASIN, EXTERIOR BARS WILL BE SHORTENED AS NEEDED TO GIVE A 3" CLEARANCE TO STRUCTURE.
7. PAY AREA FOR APPROACH SLAB IS COMPUTED AS THE PRODUCT: (GROSS WIDTH OF REINFORCED SLAB) & (SLAB LENGTH) WITH NO DEDUCTIONS MADE FOR AREAS OCCUPIED BY THE END POST & EXPANSION JOINT OR BY DRAINAGE STRUCTURES, AND NO ADDITIONS MADE FOR SIDEWALKS OR OTHER ITEMS WHEN REQUIRED WITH THE APPROACH SLAB.
8. SEE SEPARATE PLAN DETAILS FOR SUBBASE OR OTHER MATERIALS UNDER THE APPROACH SLAB. IF "CS" CONC. OR P.C. CONC. SUBBASE IS USED, CLEAR POLYETHYLENE SHEETING 8 MILS MIN. THICKNESS, WITH A 6"OVERLAP UNIFORMLY LAYED, SHALL BE REQUIRED UNDER THE APPROACH SLAB TO PREVENT BONDING. POLYETHYLENE SHEETING SHALL BE NEW, UNUSED AND FREE OF HOLES, RIPS AND TEARS.
9. ALL APPROACH SLABS EXCEEDING 42' IN WIDTH WILL CONTAIN A LONGITUDINAL CONSTRUCTION JOINT. SLABS EXCEEDING 60' AND 90' IN WIDTH SHALL CONTAIN 2 AND 3 LONGITUDINAL CONSTRUCTION JOINTS RESPECTIVELY. SECTIONS BETWEEN JOINTS OR BETWEEN A JOINT AND SLAB SHALL NOT BE LESS THAN 12' OR MORE THAN 30' WIDE. REINFORCEMENT STEEL REMAINS UNCHANGED AND SHALL EXTEND THRU JOINTS. JOINTS SHALL BE LOCATED AT LANE LINES TO PROVIDE OFFSET FROM WHEELPATHS.
10. IF BRIDGE DECK JOINT SEAL IS USED BETWEEN APPROACH SLAB AND BRIDGE, THE END OF SLAB ADJACENT TO END POST WILL BE SEALED WITH LOW MODULUS SILICONE SEALANT.

NOTE: THIS STANDARD REPLACES STANDARD 9017 E.

DEPARTMENT OF TRANSPORTATION
STATE OF GEORGIA

STANDARD
REINFORCED CONCRETE APPROACH SLAB
20 FT. LENGTH

TYPICAL USE: CURB OR CURB & GUTTER ADJACENT TO ROADWAY AND /OR SIDEWALK ACROSS BRIDGE

NOT TO SCALE | REDRAWN JULY 2024 | JUNE 1985

DATE / REVISION / BY

DES. R.M.U.
DRW. R.M.U.
TRA. G.M.E.
CHK. R.K.C.

(SUBMITTED) Floyd E. Hardy
STATE ROAD & AIRPORT DESIGN ENGINEER

(APPROVED) Hal Purcell
STATE HIGHWAY ENGINEER

NUMBER 9017L

GDOT Georgia Department of Transportation | P. I. No. XXXXXXX

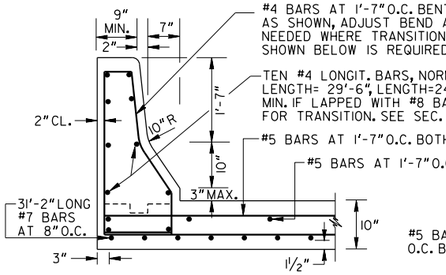

NOTE:
SIDE BARRIER ON APPROACH SLAB IS APPLICABLE WHERE SIDE BARRIER IS CONTINUED ALONG ROADWAY OR WHERE GUARDRAIL CANNOT BE ATTACHED AT BRIDGE END, NORMALLY BRIDGE SIDE BARRIER IS TRANSITIONED TO END POST ON BRIDGE.

SECTION A-A

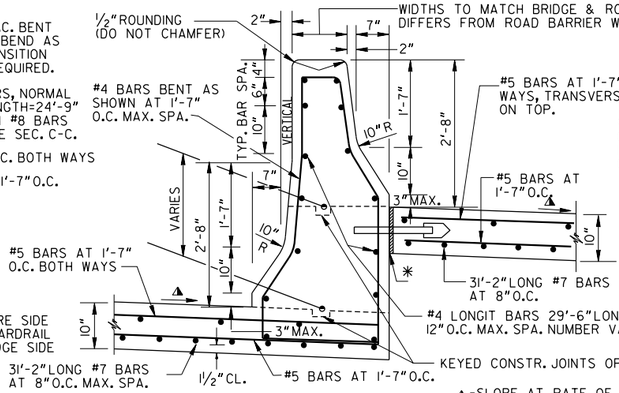

S.E. SECTION

▲-SLOPE AT RATE OF S.E.

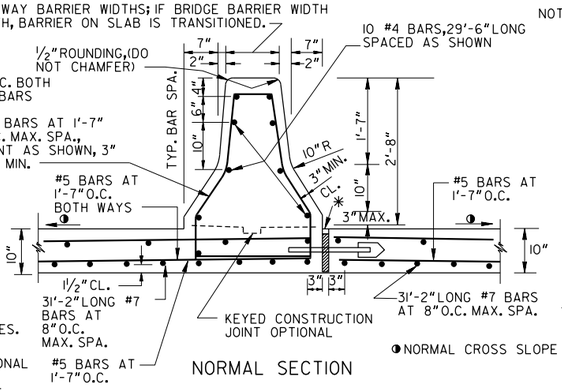

NORMAL SECTION

◑NORMAL CROSS SLOPE

* EXPANSION JT.(SHOWN) OR CONSTR. JOINT AS REQ'D. SEE NOTE A

NOTE: WHERE APPROACH SLAB IS INTERCEPTED BY END POST OR WHERE TRANSITION CURB IS INTERCEPTED BY CATCH BASIN, EXTERIOR BARS WILL BE AS SHORTENED AS NEEDED TO GIVE A 3" CLEARANCE TO THE STRUCTURE.

NOTE: BW INDICATES BRIDGE WIDTH MEASURED FROM BRIDGE GUTTER LINE TO BRIDGE GUTTER LINE.

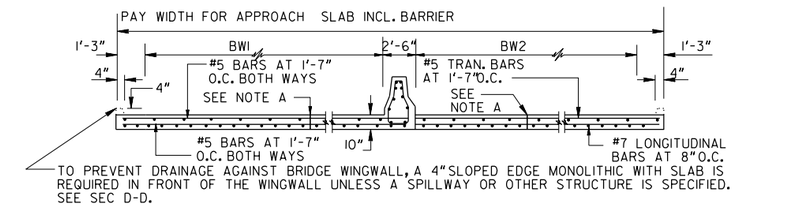

TYPICAL SECTION : SHOULDERS ADJACENT TO OUTSIDE LANES ALONG ROADWAY

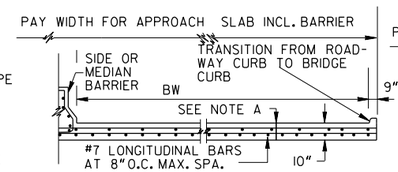

HALF SECTION : WITH CURB

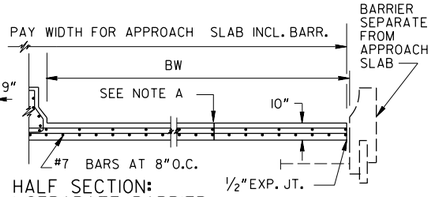

HALF SECTION: I SEPARATE BARRIER

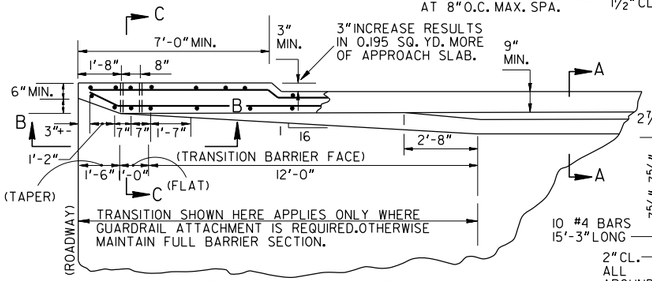

PLAN VIEW: SIDE BARRIER TRANSITION FOR GUARDRAIL ATTACHMENT

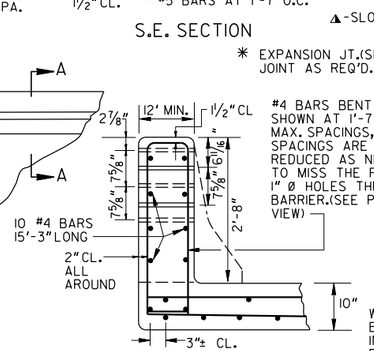

SECTION C-C

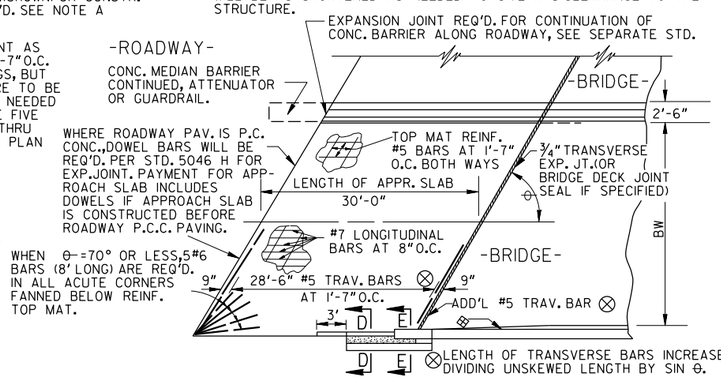

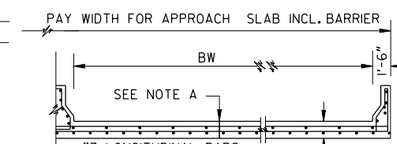

HALF SECTION : WITH SIDE BARRIER

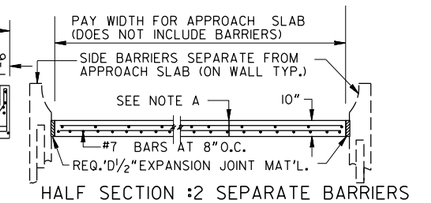

HALF SECTION : 2 SEPARATE BARRIERS

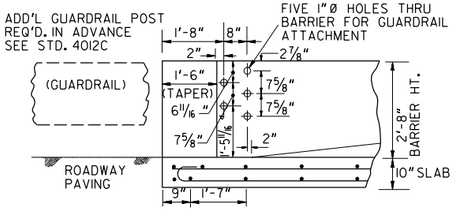

SECTION B-B

NOTE: WHERE GUARDRAIL IS REQ'D., SEE STANDARD 4270 FOR SPECIAL END SHOE ATTACHMENT. REDUCED POST SPACINGS SHALL BE REQUIRED, (SEE STD.4012C OR OTHER APPLICABLE DETAIL.) PAYMENT FOR APPROACH SLAB INCLUDES BARRIER TRANSITION WITH FIVE 1" Ø HOLES PROPERLY LOCATED WHERE GUARDRAIL IS REQUIRED. PAYMENT FOR GUARDRAIL INCLUDES SPECIAL END SHOE, GUARDRAIL, POSTS, ETC.

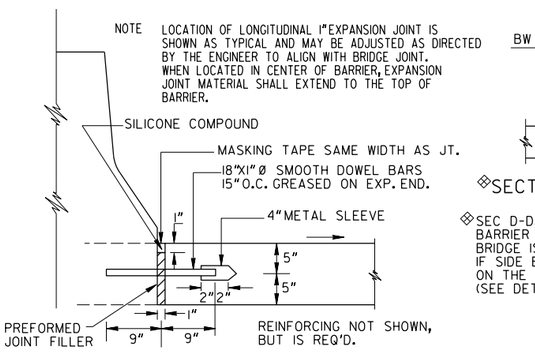

LONGITUDINAL 1" EXPANSION JOINT DETAIL

NOTE: LONGITUDINAL EXP. JOINT NOT REQ'D. FOR APPROACH SLAB LESS THAN 100 FT. WIDE UNLESS SO SPECIFIED

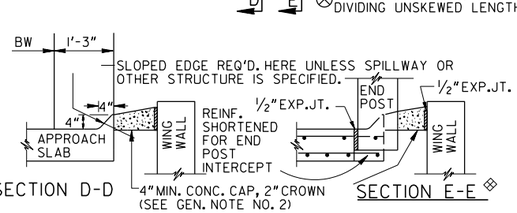

◈SECTION D-D — SECTION E-E◈

◈SEC D-D, SEC E-E & SIDE BARRIER TRANSITION ON BRIDGE IS NOT APPLICABLE IF SIDE BARRIER IS REQ'D. ON THE APPROACH SLAB (SEE DETAILS ABOVE LT.)

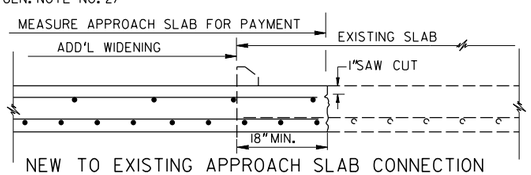

NEW TO EXISTING APPROACH SLAB CONNECTION

REMOVE CONCRETE FROM 18" STRIP WITH CARE TO MAKE CUT AS VERTICAL AS POSSIBLE. EXPOSED BARS TO BE CUT AND BENT TO FIT WITH ALL SCALE AND RUST REMOVED. EPOXY IS REQUIRED BETWEEN NEW AND EXISTING CONCRETE. EXISTING REINFORCING SHALL EXTEND 15" MIN. INTO NEW SECTION . PAYMENT FOR SLAB INCLUDES ALL WORK HERE DESCRIBED.

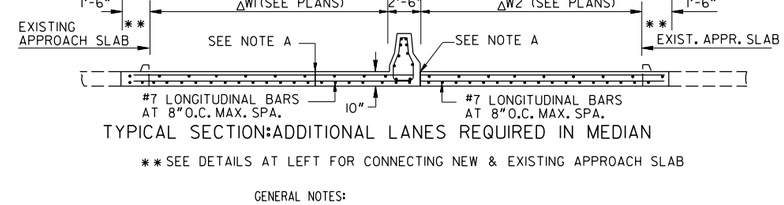

TYPICAL SECTION: ADDITIONAL LANES REQUIRED IN MEDIAN

** SEE DETAILS AT LEFT FOR CONNECTING NEW & EXISTING APPROACH SLAB

GENERAL NOTES:

1. REINFORCED CONCRETE APPROACH SLAB INCLUDING BARRIER INDICTES THAT ONE OR MORE CONCRETE (SIDE OR MEDIAN) BARRIERS IS REQUIRED ON THE APPROACH SLAB. IF APPROACH SLAB REQUIRES CURB OR SLOPED EDGE AS WELL AS CONCRETE BARRIER, THE ENTIRE SLAB IS TO BE ITEMIZED AS REINFORCED CONCRETE APPROACH SLAB INCLUDING BARRIER.

   COMPUTE SQ. YDS. OF APPROACH SLAB BY MULTIPLYING THE SLAB PAY WIDTH (IN FT.) BY 30/9.

2. THE 4" CONCRETE CAP ADJACENT TO APPROACH SLAB WILL HAVE HOLES BLOCKED OUT FOR GUARDRAIL POST INSTALLATION (STD. 4012C) UNLESS IT HAS BEEN VERIFIED THAT GUARDRAIL IS NOT REQUIRED. PAYMENT FOR APPROACH SLAB INCLUDES THE ½" EXP. MATERIAL & CONC. CAP. WITH THE BLOCKED OUT HOLES.

3. SEE SEPARATE SHEETS FOR SUBBASE OR OTHER MATERIALS UNDER APPROACH SLAB.

NOTES FOR JOINTS.

A. ALL APPROACH SLABS EXCEEDING 42' IN WIDTH WILL CONTAIN A LONGITUDINAL CONSTRUCTION JOINT. APPROACH SLABS EXCEEDING 60' AND 90' IN WIDTH SHALL CONTAIN 2 AND 3 LONGITUDINAL CONSTRUCTION JOINTS RESPECTIVELY. LONGITUDINAL EXPANSION JOINTS SHALL BE REQUIRED IF APPROACH SLAB IS OVER 100 FT. IN WIDTH-OR WHERE BRIDGE HAS A LONGITUDINAL EXPANSION JOINT. THE APPROACH SLAB EXPANSION JOINT SHALL BE ALIGNED TO MATCH. SECTIONS BETWEEN JOINTS OR BETWEEN THE SLAB EDGE AND A JOINT SHALL NOT BE LESS THAN 12' OR MORE THAN 30' WIDE. JOINTS SHALL BE LOCATED AT LANE LINES TO PROVIDE OFFSET FROM WHEEL PATHS. APPROACH SLABS WITH LONGITUDINAL CONSTRUCTION JOINTS SHALL BE MADE WITH MORE THAN ONE POUR. REINFORCING STEEL SHALL EXTEND THRU CONSTRUCTION JOINT UNCHANGED, BUT NOT THRU EXPANSION JOINT.

B. TRANSVERSE JOINT BETWEEN APPROACH SLAB AND BRIDGE SHALL BE AN 3#4" EXPANSION JOINT AS SHOWN UNLESS SPECIFIED OTHERWISE. SEE SEPARATE SHEET WHERE BRIDGE DECK JOINT SEAL IS SPECIFIED. IF BRIDGE DECK JOINT SEAL IS USED BETWEEN THE APPROACH SLAB AND BRIDGE, THE END OF SLAB ADJACENT TO END POST WILL BE SEALED WITH LOW MODULUS SILICONE SEALANT.

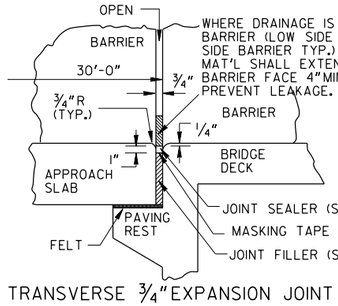

TRANSVERSE ¾" EXPANSION JOINT

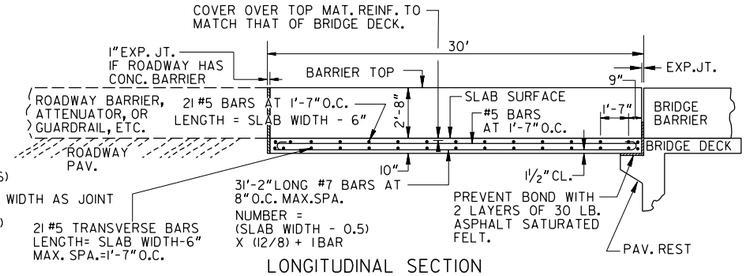

LONGITUDINAL SECTION

DATE	REVISION	BY
6-28-93	REVISED SEC. D-D WIDTH	R.M.U.
12-4-89	BARRIER REINF. PLACEM.	R.M.U.
3-29-89	T BEAM GUARDRAIL CONN.	R.M.U.

DEPARTMENT OF TRANSPORTATION
STATE OF GEORGIA

STANDARD
30 FT. LENGTH
REINFORCED CONCRETE ARRROACH SLAB
(WITH CONCRETE BARRIER)

NOT TO SCALE — REDRAWN JULY 2024 — JUNE 1985

DES. RM.U.
DRW. RM.U.
TRA. G.M.F.
CHK. R.K.C.

(SUBMITTED) Lloyd E. Hardy
STATE ROAD & AIRPORT DESIGN ENGINEER
(APPROVED) Hal Purvis
STATE HIGHWAY ENGINEER

NUMBER 9017M

GDOT Georgia Department of Transportation | P. I. No. XXXXXXX

#4 BARS AT 1'-7"O.C. BENT AS SHOWN, ADJUST BEND AS NEEDED WHERE TRANSITION SHOWN BELOW IS REQUIRED.

TEN #4 LONGIT. BARS, NORMAL LENGTH= 19'-6", LENGTH=14'-9" MIN. IF LAPPED WITH #8 BARS FOR TRANSITION. SEE SEC. C-C.

#5 BARS AT 1'-7"O.C. BOTH WAYS

#5 BARS AT 1'-7"O.C.

2"CL.

3"MAX.

1½" CL.

2'-2"LONG #7 BARS AT 8"O.C.

SECTION A-A

NOTE: SIDE BARRIER ON APPROACH SLAB IS APPLICABLE WHERE SIDE BARRIER IS CONTINUED ALONG ROADWAY OR WHERE GUARDRAIL CANNOT BE ATTACHED AT BRIDGE END. NORMALLY BRIDGE SIDE BARRIER IS TRANSITIONED TO END POST ON BRIDGE.

½"ROUNDING (DO NOT CHAMFER)

WIDTHS TO MATCH BRIDGE & ROADWAY BARRIER WIDTHS; IF BRIDGE BARRIER WIDTH DIFFERS FROM ROAD BARRIER WIDTH, BARRIER ON SLAB IS TRANSITIONED.

#4 BARS BENT AS SHOWN AT 1'-7" O.C. MAX. SPA.

#5 BARS AT 1'-7"O.C. BOTH WAYS, TRANSVERSE BARS ON TOP.

#5 BARS AT 1'-7"O.C.

#4 LONGIT BARS 19'-6"LONG, 12"O.C. MAX. SPA. NUMBER VARIES.

KEYED CONSTR. JOINTS OPTIONAL

SLOPE AT RATE OF S.E.

S.E. SECTION

½"ROUNDING,(DO NOT CHAMFER)

10 #4 BARS,19'-6"LONG SPACED AS SHOWN

#4 BARS AT 1'-7" O.C. MAX. SPA. BENT AS SHOWN, 3" CL. MIN.

#5 BARS AT 1'-7"O.C. BOTH WAYS

#5 BARS AT 1'-7"O.C.

2'-2"LONG #7 BARS AT 8"O.C. MAX. SPA.

KEYED CONSTRUCTION JOINT OPTIONAL

NORMAL CROSS SLOPE

NORMAL SECTION

NOTE: BW INDICATES BRIDGE WIDTH MEASURED FROM BRIDGE GUTTER LINE TO BRIDGE GUTTER LINE.

PAY WIDTH FOR APPROACH SLAB INCL. BARRIER

#5 BARS AT 1'-7"O.C. BOTH WAYS SEE NOTE A

#5 BARS AT 1'-7"O.C.

SLOPED EDGE WITHIN LIMITS SPECIFIED

HALF SECTION: WITH SLOPED EDGE

SPECIAL NOTE:
TYPICAL USE OF THIS STANDARD IS WHERE EXISTING 20 FOOT LENGTH APPROACH SLABS ARE TO BE WIDENED, CONCRETE BARRIER IS REQUIRED, AND THE EXISTING SLAB IS TO BE LEFT IN PLACE. SEE SEPARATE STANDARDS FOR MORE COMMONLY REQUIRED 30 FT. LENGTH APPROACH SLABS.

PAY WIDTH FOR APPROACH SLAB INCL. BARRIER

SIDE OR MEDIAN BARRIER

TRANSITION FROM ROAD-WAY CURB TO BRIDGE CURB

#7 LONGITUDINAL BARS AT 8"O.C. MAX. SPA.

HALF SECTION: WITH CURB

PAY WIDTH FOR APPROACH SLAB INCL. BARR.

BARRIER SEPARATE FROM APP. SLAB

#7 BARS AT 8"O.C.

½"EXP. JT.

HALF SECTION: SEPARATE BARRIER

7'-0"MIN.

3"INCREASE RESULTS IN 0.195 SQ. YD. MORE OF APPROACH SLAB.

3" MIN.

6"MIN.

3"±

(TRANSITION BARRIER FACE)

(FLAT)

(TAPER)

(ROADWAY)

TRANSITION SHOWN HERE APPLIES ONLY WHERE GUARDRAIL ATTACHMENT IS REQUIRED. OTHERWISE MAINTAIN FULL BARRIER SECTION.

PLAN VIEW: SIDE BARRIER TRANSITION FOR GUARDRAIL ATTACHMENT

EXPANSION JT.(SHOWN) OR CONSTR. JOINT AS REQ'D. SEE NOTE A

NOTE: WHERE APPROACH SLAB IS INTERCEPTED BY END POST OR WHERE TRANSITION CURB IS INTERCEPTED BY CATCH BASIN, EXTERIOR BARS WILL BE SHORTENED AS NEEDED TO GIVE A 3"CLEARANCE TO THE STRUCTURE.

#4 BARS BENT AS SHOWN AT 1'-7"O.C. MAX. SPACINGS, BUT SPACINGS ARE TO BE REDUCED AS NEEDED TO MISS THE FIVE 1"Ø HOLES THRU BARRIER. (SEE PLAN VIEW)

10 #4 BARS 15'-3"LONG

2"CL.-ALL AROUND

SECTION C-C

EXPANSION JOINT REQ'D. FOR CONTINUATION OF CONC. BARRIER ALONG ROADWAY, SEE SEPARATE STD.

-ROADWAY-

CONC. MEDIAN BARRIER CONTINUED, ATTENUATOR OR GUARDRAIL.

-BRIDGE-

WHERE ROADWAY PAV. IS P.C. CONC., DOWEL BARS WILL BE REQ'D. PER STD. 5046 H FOR EXP. JOINT. PAYMENT FOR APP-ROACH SLAB INCLUDES DOWELS IF APPROACH SLAB IS CONSTRUCTED BEFORE ROADWAY P.C.C. PAVING.

TOP MAT REINF. #5 BARS AT 1'-7" O.C. BOTH WAYS

¾"TRANSVERSE EXP. JT.(OR BRIDGE DECK JOINT SEAL IF SPECIFIED)

LENGTH OF APPR. SLAB 20'-0"

#7 LONGITUDINAL BARS AT 8"O.C.

19'-0"#5 TRAV. BARS AT 1'-7"O.C.

ADD'L #5 TRAV. BAR

PLAN (SKEW SHOWN)

LENGTH OF TRANSVERSE BARS INCREASED BY DIVIDING UNSKEWED LENGTH BY SIN θ.

PAY WIDTH FOR APPROACH SLAB INCL. BARRIER

#7 LONGITUDINAL BARS AT 8"O.C. MAX. SPA.

HALF SECTION: WITH SIDE BARRIER

PAY WIDTH FOR APPROACH SLAB (DOES NOT INCLUDE BARRIERS)

SIDE BARRIERS SEPARATE FROM APPROACH SLAB (ON WALL TYP.)

#7 BARS AT 8"O.C.

REQ.'D ½"EXPANSION JOINT MAT'L.

HALF SECTION: 2 SEPARATE BARRIERS

ADD'L GUARDRAIL POST REQ'D. IN ADVANCE SEE STD. 4012C

FIVE 1"Ø HOLES THRU BARRIER FOR GUARDRAIL ATTACHMENT

(GUARDRAIL)

(TAPER)

ROADWAY PAVING

2'-8" BARRIER HT.

10"SLAB

SECTION B-B

NOTE:
WHERE GUARDRAIL IS REQ'D., SEE STANDARD 4270 FOR SPECIAL END SHOE ATTACHMENT. REDUCED POST SPACINGS SHALL BE REQUIRED, SEE STD.4012C OR OTHER APPLICABLE DETAIL. PAYMENT FOR APPROACH SLAB INCLUDES BARRIER TRANSITION WITH FIVE 1"Ø HOLES PROPERLY LOCATED WHERE GUARDRAIL IS REQUIRED. PAYMENT FOR GUARDRAIL INCLUDES SPECIAL END SHOE, GUARDRAIL, POSTS, ETC.

NOTE: LOCATION OF LONGITUDINAL 1"EXPANSION JOINT IS SHOWN AS TYPICAL AND MAY BE ADJUSTED AS DIRECTED BY THE ENGINEER TO ALIGN WITH BRIDGE JOINT. WHEN LOCATED IN CENTER OF BARRIER, EXPANSION JOINT MATERIAL SHALL EXTEND TO THE TOP OF BARRIER.

SILICONE COMPOUND

MASKING TAPE SAME WIDTH AS JT.

18"X1"Ø SMOOTH DOWEL BARS 15"O.C. GREASED ON EXP. END.

4"METAL SLEEVE

PREFORMED JOINT FILLER

REINFORCING NOT SHOWN, BUT IS REQ'D.

LONGITUDINAL 1"EXPANSION JOINT DETAIL

NOTE: LONGITUDINAL EXP. JOINT NOT REQ'D. FOR APPROACH SLAB LESS THAN 100 FT. WIDE UNLESS SO SPECIFIED

SLOPED EDGE REQ'D HERE UNLESS SPILLWAY OR OTHER STRUCTURE IS SPECIFIED

APPROACH SLAB

WING-WALL

REINF. SHORTENED FOR END POST INTERCEPT

END POST

½"EXP.JT.

4"MIN. CONC. CAP, 2"CROWN (SEE GEN. NOTE NO. 2)

SECTION D-D

SECTION E-E

SEC D-D, SEC E-E & SIDE BARRIER TRANSITION ON BRIDGE IS NOT APPLICABLE IF SIDE BARRIER IS REQ'D ON THE APPROACH SLAB (SEE DETAILS ABOVE LT.)

MEASURE APPROACH SLAB FOR PAYMENT

ADD'L WIDENING

EXISTING SLAB

1"SAW CUT

18"MIN.

NEW TO EXISTING APPROACH SLAB CONNECTION

REMOVE CONCRETE FROM 18"STRIP WITH CARE TO MAKE CUT AS VERTICAL AS POSSIBLE. EXPOSED BARS TO BE CUT AND BENT TO FIT WITH ALL SCALE AND RUST REMOVED. EPOXY IS REQUIRED BETWEEN NEW AND EXISTING CONCRETE. EXISTING REINFORCING SHALL EXTEND 15"MIN. INTO NEW SECTION. PAYMENT FOR NEW SLAB INCLUDES ALL WORK HERE DESCRIBED.

PAY WIDTH FOR APPROACH SLAB INCL. BARRIER =(ΔW1+ΔW2 + 5.5') MIN.

ΔW1(SEE PLANS)

ΔW2 (SEE PLANS)

EXISTING APPR. SLAB

SEE NOTE A

#7 LONGITUDINAL BARS AT 8"O.C. MAX. SPA.

TYPICAL SECTION: ADDITIONAL LANES REQUIRED IN MEDIAN

** SEE DETAIL AT LEFT FOR CONNECTING NEW & EXISTING APPROACH SLAB

NOTES FOR JOINTS.

A. ALL APPROACH SLABS EXCEEDING 42' IN WIDTH WILL CONTAIN A LONGITUDINAL CONSTRUCTION JOINT, APPROACH SLABS EXCEEDING 60' AND 90' IN WIDTH SHALL CONTAIN 2 AND 3 LONGITUDINAL CONSTRUCTION JOINTS RESPECTIVELY. LONGITUDINAL EXPANSION JOINT SHALL BE REQUIRED IF APPROACH SLAB IS OVER 100 FT. IN WIDTH-OR WHERE BRIDGE HAS A LONGITUDINAL EXPANSION JOINT, THE APPROACH SLAB EXPANSION JOINT SHALL BE ALIGNED TO MATCH. SECTIONS BETWEEN JOINTS OR BETWEEN THE SLAB EDGE AND A JOINT SHALL NOT BE LESS THAN 12' OR MORE THAN 30' WIDE. JOINTS SHALL BE LOCATED AT LANE LINES TO PROVIDE OFFSET FROM WHEEL PATHS. APPROACH SLABS WITH LONGITUDINAL CONSTRUCTION JOINTS SHALL BE MADE WITH MORE THAN ONE POUR. REINFORCING STEEL SHALL EXTEND THRU CONSTRUCTION JOINT UNCHANGED, BUT NOT THRU EXPANSION JOINT.

B. TRANSVERSE JOINT BETWEEN APPROACH SLAB AND BRIDGE SHALL BE AN ¾"EXPANSION JOINT AS SHOWN UNLESS SPECIFIED OTHERWISE. SEE SEPARATE SHEET WHERE BRIDGE DECK JOINT SEAL IS SPECIFIED. IF BRIDGE DECK JOINT SEAL IS USED BETWEEN THE APPROACH SLAB AND BRIDGE, THE END OF SLAB ADJACENT TO END POST WILL BE SEALED WITH LOW MODULUS SILICONE SEALANT.

OPEN BARRIER

20'-0"

¾"R (TYP.)

¼"

APPROACH SLAB

1"

PAVING REST

FELT

WHERE DRAINAGE IS TOWARD BARRIER (LOW SIDE S.E. OR SIDE BARRIER TYP.) JOINT MAT'L SHALL EXTEND UP BARRIER FACE 4"MIN. TO PREVENT LEAKAGE.

BRIDGE DECK

JOINT SEALER (SEC.833.06)

MASKING TAPE TO SAME WIDTH AS JOINT

JOINT FILLER (SEC.833.10)

TRANSVERSE ¾"EXPANSION JOINT

COVER OVER TOP MAT REINF. TO MATCH THAT OF BRIDGE DECK.

1"EXP. JT. (IF ROADWAY HAS CONC. BARRIER)

20'

BARRIER TOP

EXP.JT.

6"

ROADWAY BARRIER, ATTENUATOR, OR GUARDRAIL, ETC.

15 #5 BARS AT 1'-7"O.C. LENGTH=SLAB WIDTH-6"

2'-8"

SLAB SURFACE

#5 BARS AT 1'-7"O.C.

1'-7"

BRIDGE BARRIER

BRIDGE DECK

ROADWAY PAV.

10"

21'-2"LONG #7 BARS AT 8"O.C. MAX.SPA.

PREVENT BOND WITH 2 LAYERS OF 30 LB. ASPHALT SATURATED FELT.

PAV. REST

15 #5 TRANSVERSE BARS LENGTH= SLAB WIDTH-6" MAX. SPA.=1'-7"O.C.

NUMBER=(SLAB WIDTH-0.5) x (12/8) + 1 BAR

LONGITUDINAL SECTION

GENERAL NOTES:

1. REINFORCED CONCRETE APPROACH SLAB INCLUDING BARRIER INDICATES THAT ONE OR MORE CONCRETE (SIDE OR MEDIAN) BARRIERS IS REQUIRED ON THE APPROACH SLAB. IF APPROACH SLAB REQUIRES CURB OR SLOPED EDGE AS WELL AS CONCRETE BARRIER, THE ENTIRE SLAB IS TO BE ITEMIZED AS REINFORCED CONCRETE APPROACH SLAB INCLUDING BARRIER.

   COMPUTE SQ. YDS. OF APPROACH SLAB BY MULTIPLYING THE SLAB PAY WIDTH (ft. FT.)BY 20/9.

2. THE 4"CONCRETE CAP ADJACENT TO APPROACH SLAB WILL HAVE HOLES BLOCKED OUT FOR GUARDRAIL POST INSTALLATION (STD. 4012C) UNLESS IT HAS BEEN VERIFIED THAT GUARDRAIL IS NOT REQUIRED. PAYMENT FOR APPROACH SLAB INCLUDES THE ½"EXP. MATERIAL & CONC. CAP. WITH THE BLOCKED OUT HOLES.

3. SEE SEPARATE SHEETS FOR SUBBASE OR OTHER MATERIALS UNDER APPROACH SLAB.

DATE	REVISION	BY
6-28-93	REV. SEC. "D-D" WIDTH	RMU
12-4-89	BARRIER REINF. PLACEMENT	RMU
3-29-89	T BEAM CONN.	RMU

DEPARTMENT OF TRANSPORTATION
STATE OF GEORGIA

STANDARD REINFORCED CONCRETE APPROACH SLAB 20' LENGTH
(WITH CONCRETE BARRIER)

NOT TO SCALE | REDRAWN JULY 2024 | JULY 1985

DES. RMU
DRW. RMU
TRA. GME
CHK. RKC

(SUBMITTED) STATE ROAD & AIRPORT DESIGN ENGR.

(APPROVED) STATE HIGHWAY ENGINEER

NUMBER 9017N

STATE	PROJECT NUMBER	SHEET NO.	TOTAL SHEETS
GA.			

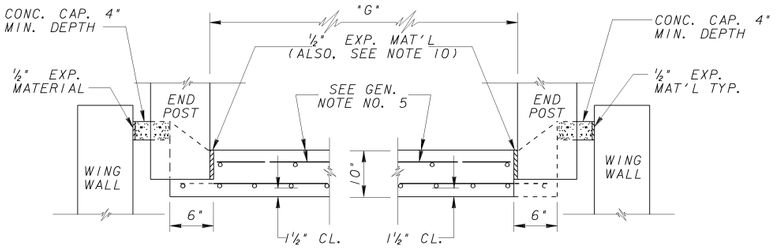

SECTION B-B SECTION C-C

NOTE: WHERE END POST INTERSECTS APPROACH SLAB, THE INTERCEPTED REINFORCING, BOTH LONGITUDINAL & TRAVERSE, SHALL BE SHORTENED AS NEEDED TO GIVE 3"+ CLEARANCE TO END POST.

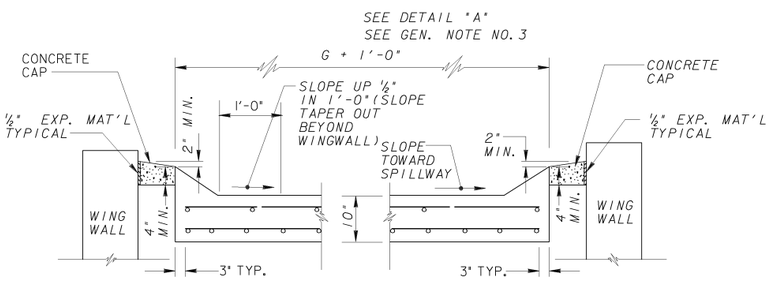

SECTION D-D (SHOWN WHERE SPILLWAY IS NOT REQ'D.) SECTION E-E (SHOWN WHERE SPILLWAY IS REQ'D.)

NOTE: BLOCKOUTS ARE OMITTED WHERE IT HAS BEEN VERIFIED THAT GUARDRAIL WILL NOT BE REQ'D.

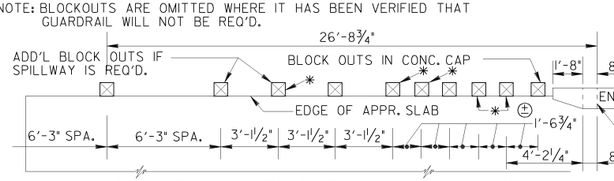

BLOCKOUTS LOCATIONS FOR GUARDRAIL POST

*IF GUARDRAIL IS WARRANTED AT THE TRAILING END OF 4 OR MORE LANES, BLOCKOUTS FLAGED WITH AN ASTERISK ARE OMITTED.

SEE GENERAL NOTE NO. 3

± VARIED TO MISS BRIDGE PAV. REST

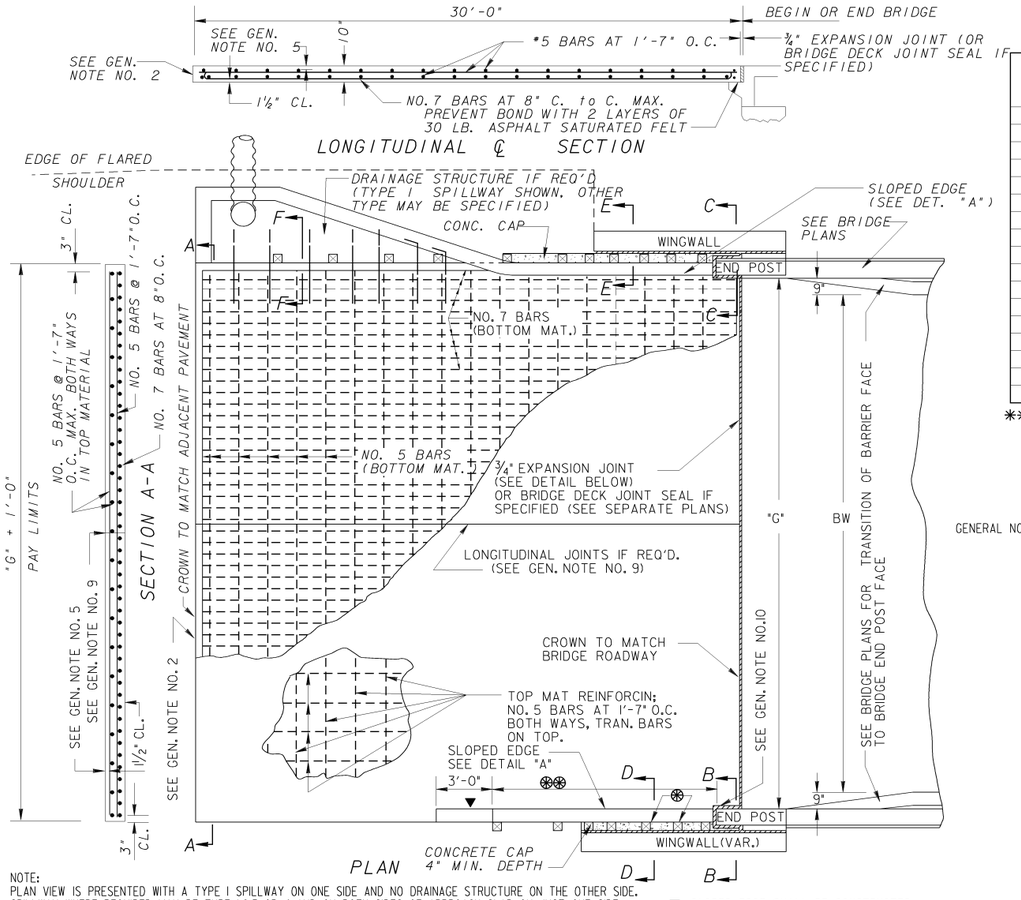

PLAN

NOTE:
PLAN VIEW IS PRESENTED WITH A TYPE I SPILLWAY ON ONE SIDE AND NO DRAINAGE STRUCTURE ON THE OTHER SIDE. SPILLWAY, WHERE REQUIRED, MAY BE TYPE I,2,3 OR 4 AND ON BOTH SIDES OF APPROACH SLAB, ON JUST ONE SIDE, OR NO SPILLWAY, AS CONDITIONS WARRANT. APPROACH SLAB QUANTITIES AND PAY ITEM WILL NOT BE EFFECTED BY SPILLWAY REQUIREMENTS. SLOPED EDGE IS REQUIRED BOTH WITH AND WITHOUT SPILLWAY.

▼ SLOPED EDGE SHALL BE CONSTRUCTED MONOLITHIC WITH APPROACH SLAB. SLOPED EDGE SHALL BE TAPERED OUT BEYOND WINGWALL. EXCEPT WHERE BRIDGE DRAINAGE MUST BE CARRIED ACROSS SLAB TO ROADWAY STRUCTURE. SLOPED EDGE SHALL THEN RUN FULL LENGTH OF SLAB.

⊛ WITHOUT SPILLWAY. NUIMBER OF BLOCKOUTS VARY ACCORDING TO LENGTH OF WINGWALL

⊛⊛ SLOPED EDGE LENGTH SHALL EXTEND TO END OF WINGWALL OR SHALL BE 12'-0" IN LENGTH, WHICHEVER IS GREATER.

QUANTITIES & REINFORCEMENT FOR TYPICAL SLAB SIZES **

BW	"C" (= BW + 1'-6")	SQ. YDS. OF APPR. SLAB * (G+1')x 30 / 9	BOTTOM MAT REINF. 31'-2" LONG #7 LONGIT. BARS -NUMBER- (÷1.5G + 1.75)	BOTTOM MAT REINF. 21- * 5 TRAIL BARS -LENGTH- (÷G + 6")	TOP MAT REINF. 29'-6" LONG #5 LONGIT. BARS -NUMBER- ÷12/19(G+0.5)+1	TOP MAT REINF. 21- # 5 TRAIL BARS -LENGTH- (÷G + 6")
28'-0"	29'-6"	101.67	46	30'-0"	20	30'-0"
30'-0"	31'-6"	108.33	49	32'-0"	22	32'-0"
32'-0"	33'-6"	115.00	52	34'-0"	23	34'-0"
34'-0"	35'-6"	121.67	55	36'-0"	24	36'-0"
36'-0"	37'-6"	128.33	58	38'-0"	25	38'-0"
38'-0"	39'-6"	135.00	61	40'-0"	27	40'-0"
40'-0"	41'-6"	141.67	64	42'-0"	28	42'-0"
42'-0"	43'-6"	148.33	67	44'-0"	29	44'-0"
44'-0"	45'-6"	155.00	70	46'-0"	30	46'-0"
46'-0"	47'-6"	161.67	73	48'-0"	32	48'-0"
48'-0"	49'-6"	168.33	76	50'-0"	33	50'-0"
50'-0"	51'-6"	175.00	79	52'-0"	34	52'-0"
52'-0"	53'-6"	181.67	82	54'-0"	36	54'-0"
54'-0"	55'-6"	188.33	85	56'-0"	37	56'-0"
56'-0"	57'-6"	195.00	88	58'-0"	38	58'-0"
58'-0"	59'-6"	201.67	91	60'-0"	39	60'-0"
60'-0"	61'-6"	208.33	94	62'-0"	40	62'-0"

** DATA IN ABOVE TABLE ARE BASED UPON COMMON SLAB/ BRIDGE WIDTHS. WHERE OTHER WIDTHS ARE ENCOUNTERED, THE FORMULAE AT COLUMN TOPS MAY BE USED IN DETERMINING ADDITIONAL DATA NEEDED.

GENERAL NOTES:

1. SPECIFICATIONS: GEORGIA STANDARD, CURRENT EDITION, AND SUPPLEMENTS THERETO.
2. WHERE PORTLAND CEMENT CONCRETE PAVEMENT IS TO BE USED FOR ROADWAY PAVING, DOWEL BARS WILL BE INSTALLED IN THE APPROACH SLAB PER STANDARD 5046 H. PAYMENT FOR THE APPROACH SLAB WILL INCLUDE THESE DOWELS, WHEN THE APPROACH SLAB IS CONSTRUCTED BEFORE THE PCC PAVEMENT CONSTRUCTION.
3. THE CONCRETE CAPS ADJACENT TO THE APPROACH SLAB WILL HAVE HOLES APPROXIMATELY 9"39", BLOCKED OUT FOR GUARDRAIL POST INSTALLATIONS (SEE DETAIL). PAYMENT FOR APPROACH SLAB WILL INCLUDE THE ½"EXPANSION MATERIAL & CONCRETE CAPS WITH BLOCKED OUT HOLES. (SEE DETAIL AT FAR LEFT).
4. WIDTH OF APPROACH SLAB IS NORMALLY DETERMINED BY DISTANCE BETWEEN FACES OF BRIDGE END POSTS. DETAILS SHOWN ARE BASED UPON THE BRIDGE BARRIER FACE BEING TRANSITIONED 9"TO FACE OF END POST ON EACH SIDE. SEE BRIDGE PLANS IF BARRIER IS CONTINUED ACROSS APPROACH SLAB INSTEAD, SEE STANDARD 9017-M.
5. COVER OVER TOP MAT OF REINFORCING WILL MATCH THAT OF THE BRIDGE DECK.
6. WHERE APPROACH SLAB IS INTERCEPTED BY THE BRIDGE END POST, EXTERIOR BARS WILL BE SHORTENED AS NEEDED TO GIVE A 3"CLEARANCE TO STRUCTURE.
7. PAY AREA FOR APPROACH SLAB SHALL BE COMPUTED AS A PRODUCT OF THE OVERALL SLAB WIDTH (G+1') TIMES THE LENGTH (30/3) WITH NO DEDUCTIONS MADE FOR AREAS OCCUPIED BY THE END POST & EXPANSION JOINTS OR BY DRAINAGE STRUCTURES, AND NO ADDITIONS MADE FOR SIDEWALKS OR OTHER ITEMS WHEN REQUIRED WITH THE APPROACH SLAB.
8. SEE SEPARATE PLAN DETAILS FOR SUBBASE OR OTHER MATERIALS UNDER THE APPROACH SLAB. IF "CS"CONC. OR P.C. CONC. SUBBASE IS USED, CLEAR POLYETHYLENE SHEETING 8 MILS MIN. THICKNESS, WITH A 6"OVERLAP, UNIFORMLY LAID. SHALL BE REQUIRED UNDER THE APPROACH SLAB TO PREVENT BONDING.POLYETHYLENE SHEETING SHALL BE NEW, UNUSED AND FREE OF HOLES, RIPS AND TEARS.
9. ALL APPROACH SLABS EXCEEDING 42' IN WIDTH WILL CONTAIN A LONGITUDINAL CONSTRUCTION JOINT, SLABS EXCEEDING 60' AND 90' IN WIDTH SHALL CONTAIN 2 AND 3 LONGITUDINAL CONSTRUCTION JOINTS RESPECTIVELY.SECTIONS BETWEEN JOINTS OR BETWEEN A JOINT AND SLAB EDGE SHALL NOT BE LESS THAN 12' OR MORE THAN 30' WIDE.REINFORCEMENT STEEL REMAINS UNCHANGED AND SHALL EXTEND THRU JOINTS.JOINTS SHALL BE LOCATED AT LANE LINES TO PROVIDE OFFSET FROM WHEEL PATHS.
10. IF BRIDGE DECK JOINT SEAL IS USED BETWEEN APPROACH SLAB AND BRIDGE, THE END OF SLAB ADJACENT TO END POST WILL BE SEALED WITH LOW MODULUS SILICONE SEALANT.

NOTE: THIS STANDARD REPLACES STANDARD 9017 H

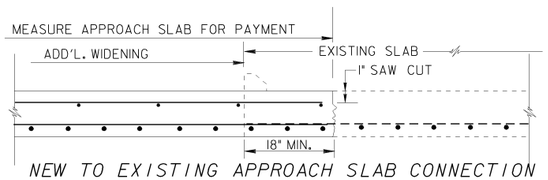

NEW TO EXISTING APPROACH SLAB CONNECTION

REMOVE CONCRETE FROM 18" STRIP WITH CARE TO MAKE CUT AS VERTICAL AS POSSIBLE. EXPOSED BARS TO BE CUT AND BENT TO FIT. ALL SCALE AND RUST REMOVED. EPOXY IS REQUIRED BETWEEN NEW AND EXISTING CONCRETE. EXISTING REINFORCING SHALL EXTEND 15" MIN. INTO NEW SECTION. PAYMENT FOR NEW SLAB INCLUDES ALL WORK HEREIN DESCRIBED.

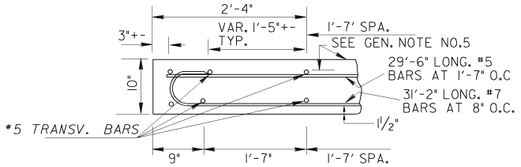

TYPICAL LONGITUDINAL END VIEW

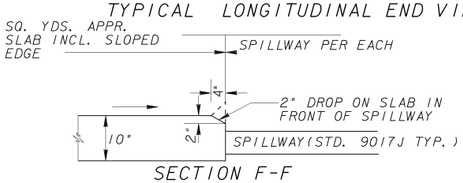

SECTION F-F

SKEWED SLAB: LONGITUDINAL BARS-NOMINAL LENGTH AND NUMBER REQUIRED SAME AS FOR UNSKEWED SLAB.

TRANSVERSE BARS-NUMBER REQUIRED SAME AS FOR UNSKEWED SLAB. NOMINAL LENGTH OF SKEWED= UNSKEWED NOMINAL LENGTH DIVIDED BY SIN A ROUNDED TO NEAREST INCH.

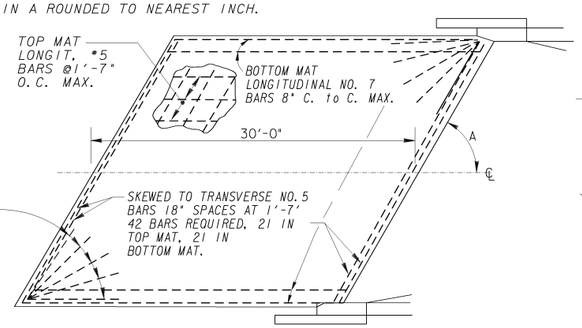

WHERE A =70° OR LESS 5-NO.6 BARS, 8FT. LONG SHALL BE REQUIRED IN ACUTE CORNERS BELOW TOP MAT OF STEEL.

SKEW MODIFICATION SKETCH

NO SCALE

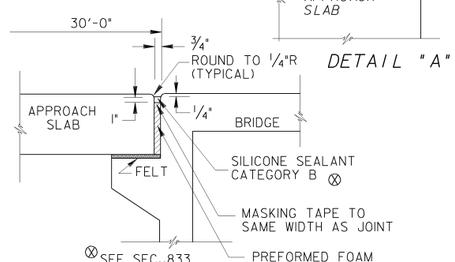

¾" EXPANSION JOINT DETAIL

THE ¾" EXPANSION JOINT SHOWN ABOVE IS REQUIRED BETWEEN APPROACH SLAB & BRIDGE AT ALL LOCATIONS, EXCEPT WHERE BRIDGE DECK JOINT SEAL (SEPARATE PLAN DETAILS) IS SPECIFIED.

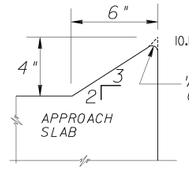

DETAIL "A"

REVISION	BY	DATE
DIM. SLOPED EDGE	S.V.M.	9-20-02
BLOCKOUT SPA.	K.L.J.	4-27-89
REDUCED A.S. WIDTH TO G+1	R.M.U.	7-8-96

DEPARTMENT OF TRANSPORTATION
STATE OF GEORGIA

STANDARD

REINFORCED CONCRETE APPROACH SLAB

30 FT. LENGTH

TYPICAL USE : WHERE SHOULDER IS ADJACENT TO ROADWAY AND/OR BRIDGE

SCALE AS SHOWN JUNE, 1985

DES. R.M.U. DRW. R.M.U. TRA. G.M.E. CHK. R.K.C.

(SUBMITTED) James A. Kemp
STATE ROAD & AIRPORT DESIGN ENGR.

(APPROVED) Thad L. Leggett
STATE HIGHWAY ENGINEER

NUMBER 9017P

GDOT Georgia Department of Transportation | P. I. No. XXXXXXX

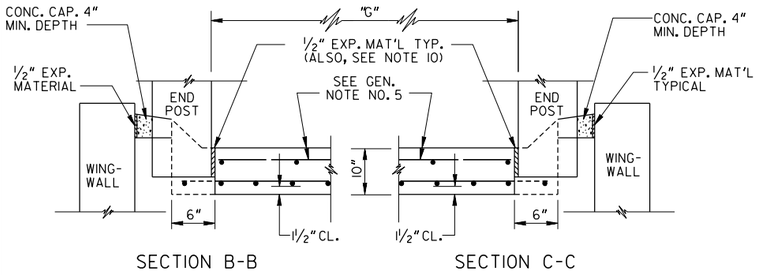

SECTION B-B SECTION C-C

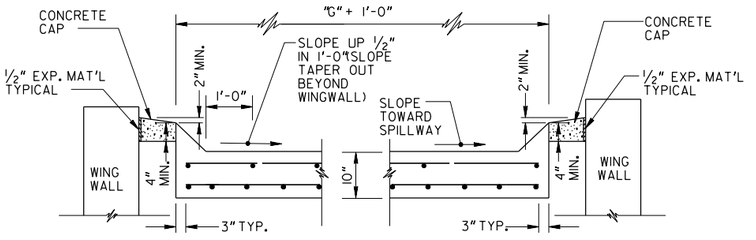

NOTE:
SLOPED EDGE SHALL BE CONSTRUCTED MONOLITHIC WITH THE APPROACH SLAB.

SECTION D-D
(SHOWN WHERE SPILLWAY IS NOT REQ'D.)

SECTION E-E
(SHOWN WHERE SPILLWAY IS REQ'D.)

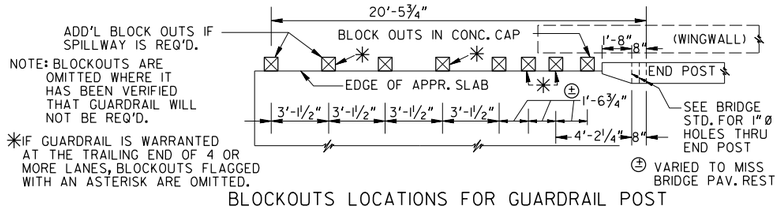

BLOCKOUTS LOCATIONS FOR GUARDRAIL POST
SEE GENERAL NOTE NO.3

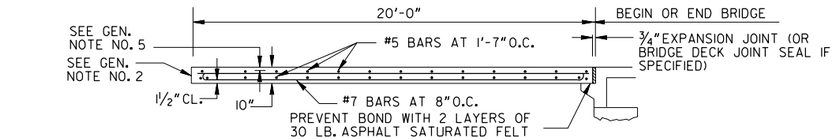

LONGITUDINAL SECTION

MAXIMUM "X" WITH REDUCED SPILLWAY (STD. 9017 J)	
TYPE 1 OR 3	TYPE 2 OR 4
5'-3"	7'-6"

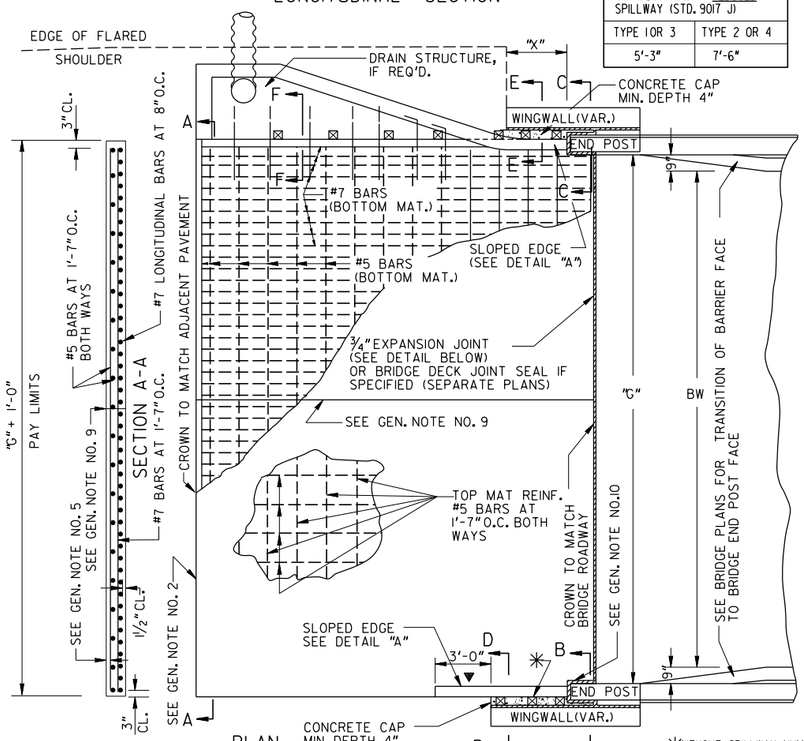

PLAN

NOTE:
PLAN VIEW IS PRESENTED WITH A TYPE 1 SPILLWAY ON ONE SIDE AND NO DRAINAGE STRUCTURE ON THE OTHER SIDE. SPILLWAY, WHERE REQUIRED, MAY BE TYPE 1,2,3 OR 4 AND REQUIRED ON BOTH SIDES OF APPROACH, OR JUST ONE SIDE, OR NO SPILLWAY AS CONDITIONS WARRANT. APPROACH SLAB QUANTITIES AND PAY ITEM WILL NOT BE EFFECTED BY SPILLWAY REQUIREMENTS. SLOPED EDGE IS REQ'D BOTH WITH AND WITHOUT SPILLWAY.

* WITHOUT SPILLWAY, NUMBER OF BLOCKOUTS WILL VARY ACCORDING TO LENGTH OF WINGWALL.

▼ SLOPED EDGE SHALL BE CONSTRUCTED MONOLITHIC WITH APPROACH SLAB. SLOPED EDGE SHALL BE TAPERED OUT BEYOND WINGWALL, EXCEPT WHERE BRIDGE DRAINAGE MUST BE CARRIED ACROSS SLAB TO ROADWAY STRUCTURE, SLOPED EDGE SHALL THEN RUN FULL LENGTH OF SLAB.

QUANTITIES & REINFORCEMENT FOR TYPICAL SLAB SIZES **						
			BOTTOM MAT REINF.		TOP MAT REINF.	
BW	"G" (=BW+1'-6")	SQ. YDS. OF APPR. SLAB (=(G+1')X 20/9)	21'-2" LONG #7 LONGIT. BARS NUMBER (=1.5G + 1.75)	15 TRANS. #5 BARS LENGTH (=G + 6")	19'-6" LONG #5 LONGIT. BARS NUMBER (=12/19(G+0.5)+1)	15 TRANS. #5 BARS LENGTH (=G + 6")
28'-0"	29'-6"	67.78	46	30'-0"	20	30'-0"
30'-0"	31'-6"	72.22	49	32'-0"	22	32'-0"
32'-0"	33'-6"	76.67	52	34'-0"	23	34'-0"
34'-0"	35'-6"	81.11	55	36'-0"	24	36'-0"
36'-0"	37'-6"	85.55	58	38'-0"	25	38'-0"
38'-0"	39'-6"	90.00	61	40'-0"	27	40'-0"
40'-0"	41'-6"	94.44	64	42'-0"	28	42'-0"
42'-0"	43'-6"	98.89	67	44'-0"	29	44'-0"
44'-0"	45'-6"	103.33	70	46'-0"	30	46'-0"

** DATA IN ABOVE TABLE ARE BASED UPON COMMON SLAB/BRIDGE WIDTHS. WHERE OTHER WIDTHS ARE ENCOUNTERED, THE FORMULAE AT COLUMN TOPS MAY BE USED IN DETERMINING ADDITIONAL DATA NEEDED.

GENERAL NOTES:

1. SPECIFICATIONS: GEORGIA STANDARD, CURRENT EDITION, AND SUPPLEMENTS THERETO.
2. WHERE PORTLAND CEMENT CONCRETE PAVEMENT IS TO BE USED FOR ROADWAY PAVING, DOWEL BARS WILL BE INSTALLED IN THE APPROACH SLAB PER STANDARD 5046-H. PAYMENT FOR THE APPROACH SLAB WILL INCLUDE THESE DOWELS, WHEN THE APPROACH SLAB IS CONSTRUCTED BEFORE THE PCC PAVEMENT CONSTRUCTION.
3. THE CONCRETE CAPS ADJACENT TO THE APPROACH SLAB WILL HAVE HOLES APPROXIMATELY 9"X9" BLOCKED OUT FOR GUARDRAIL POST INSTALLATIONS (SEE DETAIL). PAYMENT FOR APPROACH SLAB WILL INCLUDE THE 1/2" EXPANSION MATERIAL AND THE CAPS WITH THE BLOCKED OUT HOLES.
4. WIDTH OF APPROACH SLAB IS NORMALLY DETERMINED BY DISTANCE BETWEEN FACES OF BRIDGE END POSTS. DETAILS SHOWN ARE BASED UPON THE BRIDGE BARRIER FACE BEING TRANSITIONED 9" TO FACE OF END POST ON EACH SIDE. SEE BRIDGE PLANS. IF BARRIER IS CONTINUED ACROSS APPROACH SLAB INSTEAD, SEE STANDARD 9017-N.
5. COVER OVER TOP MAT OF REINFORCING WILL MATCH THAT OF THE BRIDGE DECK.
6. WHERE APPROACH SLAB IS INTERCEPTED BY THE BRIDGE END POST, EXTERIOR BARS WILL BE SHORTENED AS NEEDED TO GIVE A 3" CLEARANCE TO STRUCTURE.
7. PAY AREA FOR APPROACH SLAB SHALL BE COMPUTED AS A PRODUCT OF THE OVERALL SLAB WIDTH (G+1'/3) TIMES THE LENGTH (20/3) WITH NO DEDUCTIONS MADE FOR AREAS OCCUPIED BY THE END POST & EXPANSION JOINT OR BY DRAINAGE STRUCTURES, AND NO ADDITIONS MADE FOR SIDEWALKS OR OTHER ITEMS WHEN REQUIRED WITH THE APPROACH SLAB.
8. SEE SEPARATE PLAN DETAILS FOR SUBBASE OR OTHER MATERIALS UNDER THE APPROACH SLAB. IF "CS" CONC. OR P.C. CONC. SUBBASE IS USED, CLEAR POLYETHYLENE SHEETING 8 MILS MIN. THICKNESS, WITH A 6" OVERLAP, UNIFORMLY LAYED SHALL BE REQUIRED UNDER THE APPROACH SLAB TO PREVENT BONDING. POLYETHYLENE SHEETING SHALL BE NEW, UNUSED AND FREE OF HOLES, RIPS AND TEARS.
9. ALL APPROACH SLABS EXCEEDING 42' IN WIDTH WILL CONTAIN A LONGITUDINAL CONSTRUCTION JOINT, SLABS EXCEEDING 60' AND 90' IN WIDTH SHALL CONTAIN 2 AND 3 LONGITUDINAL CONSTRUCTION JOINTS RESPECTIVELY. SECTIONS BETWEEN JOINTS OR BETWEEN A JOINT AND SLAB EDGE SHALL NOT BE LESS THAN 12' OR MORE THAN 30' WIDE. REINFORCEMENT STEEL REMAINS UNCHANGED AND SHALL EXTEND THRU JOINTS. JOINTS SHALL BE LOCATED AT LANE LINES TO PROVIDE OFFSET FROM WHEEL PATHS.
10. IF BRIDGE DECK JOINT SEAL IS USED BETWEEN APPROACH SLAB AND BRIDGE, THE END OF SLAB ADJACENT TO END POST WILL BE SEALED WITH LOW MODULUS SILICONE SEALANT.

NOTE: THIS STANDARD REPLACES STANDARD 9017 G.

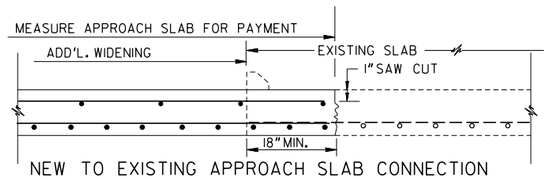

NEW TO EXISTING APPROACH SLAB CONNECTION

REMOVE CONCRETE FROM 18" STRIP WITH CARE TO MAKE CUT AS VERTICAL AS POSSIBLE. EXPOSED BARS TO BE CUT AND BENT TO FIT ALL SCALE AND RUST REMOVED. EPOXY IS REQUIRED BETWEEN NEW AND EXISTING CONCRETE. EXISTING REINFORCING SHALL EXTEND 15" MIN. INTO SECTION. PAYMENT FOR NEW SLAB INCLUDES ALL WORK HERE DESCRIBED.

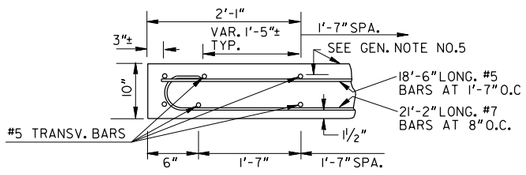

TYPICAL LONGITUDINAL END VIEW

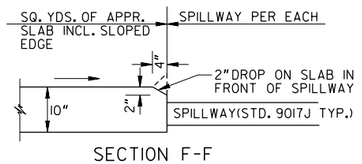

SECTION F-F

NOTES FOR SKEWED SLAB:
LONGITUDINAL BARS-NOMINAL LENGTH AND NUMBER REQ'D. SAME AS FOR UNSKEWED SLAB.

TRANSVERSE #5 BARS-NUMBER REQ'D. SAME AS FOR UNSKEWED SLAB. NOMINAL LENGTH ON SKEW = UNSKEWED LENGTH DIVIDED BY SIN θ.

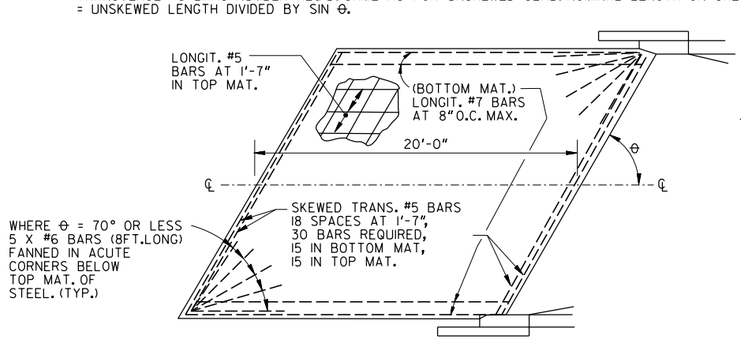

SKEW MODIFICATION SKETCH
NO SCALE

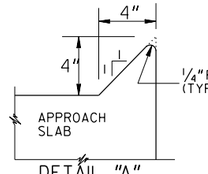

DETAIL "A"

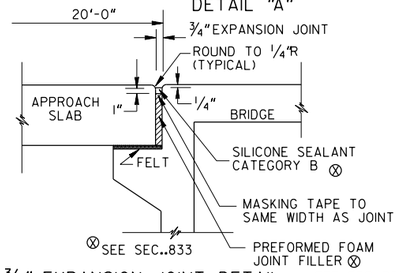

3/4" EXPANSION JOINT DETAIL SEE SEC..833

THE 3/4" EXPANSION JOINT SHOWN ABOVE IS REQUIRED BETWEEN APPROACH SLAB & BRIDGE AT ALL LOCATIONS, EXCEPT WHERE BRIDGE DECK JOINT SEAL (SEPARATE PLAN DETAILS) IS SPECIFIED.

BY	REVISION	DATE
R.M.U.	MAXIMUM "X" DIMENSIONS	2-13-90
K.L.J.	BLOCKOUT SPA.	4-27-89
R.M.U.	REDUCED A.S. WIDTH TO G+1'	7-8-86

DEPARTMENT OF TRANSPORTATION
STATE OF GEORGIA

STANDARD

REINFORCED CONCRETE APPROACH SLAB

20 FT. LENGTH

TYPICAL USE : WHERE SHOULDER IS ADJACENT TO ROADWAY AND OR ACROSS BRIDGE

NOT TO SCALE REDRAWN JULY 2024 JUNE 1985

DES. R.M.U.
DRW. R.M.U.
TRA. G.M.E.
CHK. R.K.C.

(SUBMITTED) STATE ROAD & AIRPORT DESIGN ENGR.

(APPROVED) STATE HIGHWAY ENGINEER

NUMBER 9017Q

STANDARD
REMOVED

STATE	PROJECT NUMBER	SHEET NO.	TOTAL SHEETS
GA.			

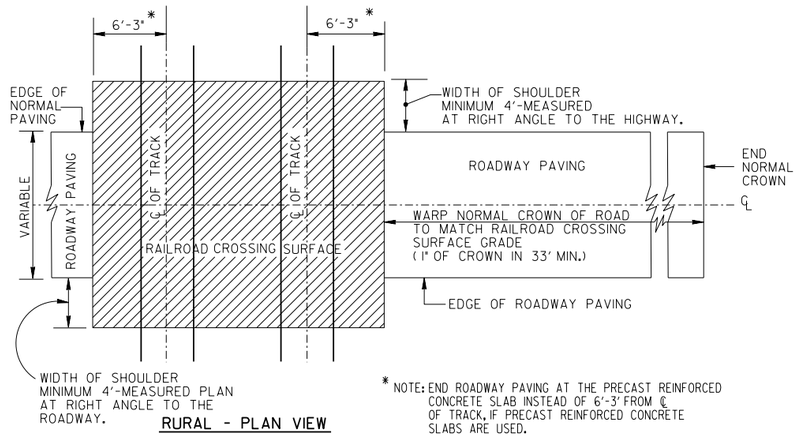

RURAL - PLAN VIEW

* NOTE: END ROADWAY PAVING AT THE PRECAST REINFORCED CONCRETE SLAB INSTEAD OF 6'-3' FROM ℄ OF TRACK, IF PRECAST REINFORCED CONCRETE SLABS ARE USED.

FLEXIBLE PAVEMENT SURFACE FOR SINGLE TRACK

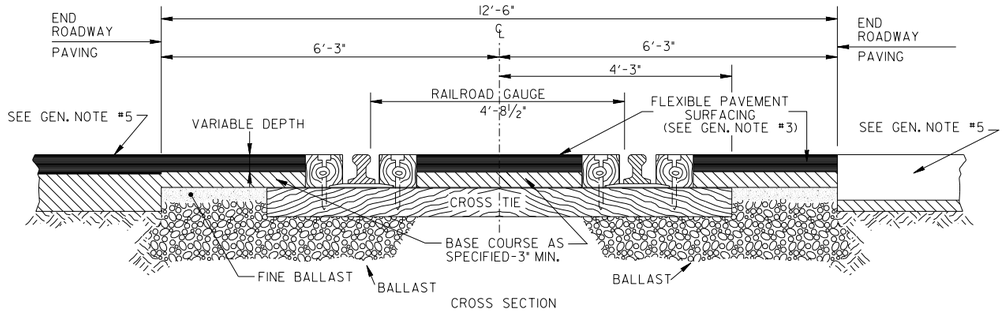

CROSS SECTION

GENERAL NOTES:

1. SPECIFCATIONS: GEORGIA STANDARDS, CURRENT EDITION & SUPPLEMENTS THERETO.
   A) SEE SECTION 232 FOR GRADE CROSSING, PRECAST CONCRETE BID ITEM PAYMENT IF APPLICABLE.
   B) SEE SECTION 232 FOR BOLTED CROSSING, INSTALLED BID ITEM PAYMENT IF APPLICABLE.
2. THE RAILROAD IS TO BE NOTIFIED BEFORE ANY WORK IS DONE BY GA. D.O.T. MAINTENANCE FORCES OR GA. D.O.T. CONTRACTORS WITHIN 25' OF C.L. OF TRACK. A RAILROAD REPRESENTATIVE IS TO BE PRESENT TO SUPERVISE THE WORK BEING DONE.
3. RAILROAD CROSSING SURFACE, BALLAST, TIES, RUNNING RAILS, GUARD TIMBERS AND FILLERS, (IF REQUIRED) FOR FLANGEWAY AND OUTSIDE OF RAIL, ARE TO BE FURNISHED AND PLACED BY RAILROAD WITH COSTS, ELIGIBLE FOR REIMBURSEMENT BEING BILLED TO THE STATE UNDER FORCE ACCOUNT AGREEMENTS, UNLESS OTHERWISE SPECIFIED.
4. ONLY AT THE RAILROAD'S REQUEST, THE GA. D.O.T. CONTRACTOR TO FURNISH ALL WORK AND MATERIALS NECESSARY FOR CONSTRUCTING THE PAVING COURSES OF THE CROSSING. THE COST OF FLAGGING SERVICE REQUIRED BY THE RAILROADS FOR ANY CONSTRUCTION ACTIVITY AT GRADE CROSSINGS SHALL BE A COST TO THE CONTRACTOR. THIS COST SHALL BE BORNE BY THE CONTRACTOR, WHETHER THE FLAGGING SERVICE IS PERFORMED BY THE CONTRACTOR'S PERSONNEL OR, IF REQUIRED BY THE RAILROADS, TO BE DONE BY THE RAILROAD PERSONNEL.
5. ONLY ONE SIDE OF THE ROADWAY PAVEMENT, ADJACENT TO THE RAILROAD CROSSING SURFACE, CAN BE RIGID. A MINIMUM OF 15' OF FLEXIBLE PAVEMENT IS REQUIRED ADJACENT TO THE OTHER SIDE OF THE RAILROAD CROSSING SURFACE.
6. REFER TO AASHTO, *POLICY ON GEOMETRIC DESIGN OF HIGHWAYS AND STREETS*, FOR ADDITIONAL DESIGN GUIDANCE ON RAILROAD-HIGHWAY GRADE CROSSINGS (SECTION 9.12).

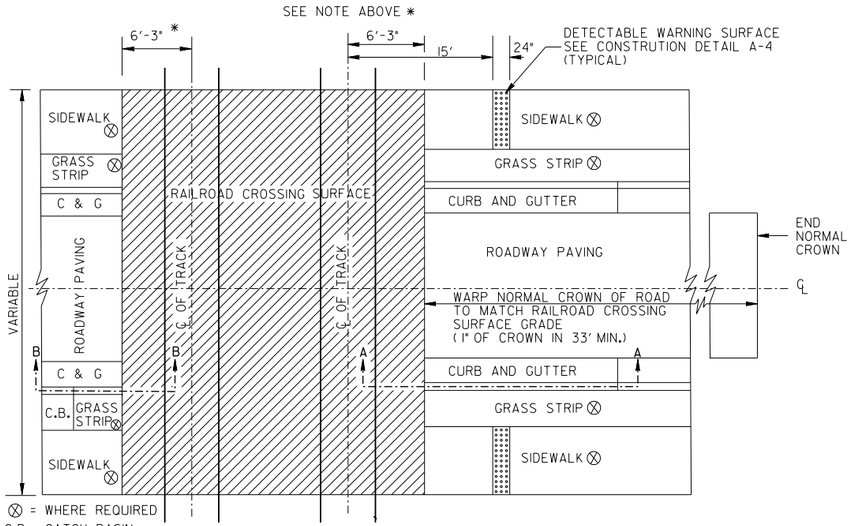

URBAN - PLAN VIEW

COMMERCIAL PRECAST REINFORCED CONCRETE SLABS

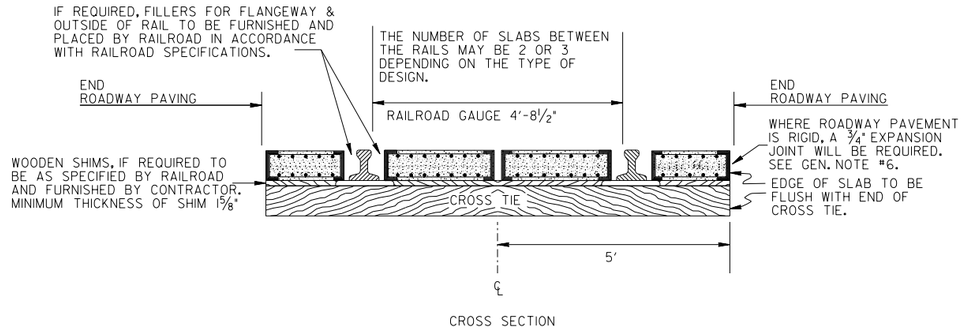

CROSS SECTION

GENERAL SPECIFICATIONS FOR COMMERCIAL PRECAST REINFORCED CONCRETE SLAB FOR RAILWAY CROSSING

A. THE PLACING OF PRECAST REINFORCED CONCRETE SLABS WILL BE PERMITTED WHERE APPROVED BY THE RAILROAD & THE STATE UTILITIES ENGINEER OR DESIGNEE.

B. SLABS TO BE OF THE TYPE THAT CAN BE ANCHORED TO TIES AND REMOVED.

C. IF SLABS ARE OVER MULTIPLE TRACKS, THE INTERTRACK SLABS ARE TO BE PLACED ON COMPACTED EARTH.

D. THE DEPTH OF THE SLABS SHALL BE SUCH THAT THE TOP SURFACE OF THE CROSSING WILL BE IN THE SAME PLANE AS THE TOP OF THE RAIL. SHIMS WILL BE USED IF REQUIRED

E. ALL EXPOSED EDGES OF SLAB WILL BE ARMORED.

F. PROTECTION OF THE END SLABS AGAINST DRAGGING BRAKE RIGGING WILL BE PROVIDED.

G. IN GENERAL, THE DESIGN SLABS WILL BE IN ACCORDANCE WITH (AREMA) AMERICAN RAILWAY ENGINEERING AND MAINTENANCE-OF-WAY ASSOCIATION SPECIFICATIONS.

H. THE TYPE OF COMMERCIAL PRECAST CONCRETE SELECTED BY THE CONTRACTOR MUST BE APPROVED BY THE RAILROAD & THE STATE UTILITIES ENGINEER OR DESIGNEE.

I. THE COMMERCIAL PRECAST CROSS SECTION IS A TYPICAL REPRESENTATION OF ONE TYPE OF MANUFACTURED SURFACE AND IS SHOWN FOR INFORMATION ONLY. DIMENSIONS MAY VARY WITH DIFFERENT DESIGNS.

ALTERNATE:

COMMERCIAL PREFABRICATED OR MANUFACTURED SECTIONS OTHER THAN REINFORCED CONCRETE SLABS MAY BE USED PROVIDED THE DESIGNS AND MATERIALS ARE APPROVED BY THE GA. D.O.T. AND BY THE RAILROAD, WITH THE ABOVE GENERAL SPECIFICATIONS APPLYING.

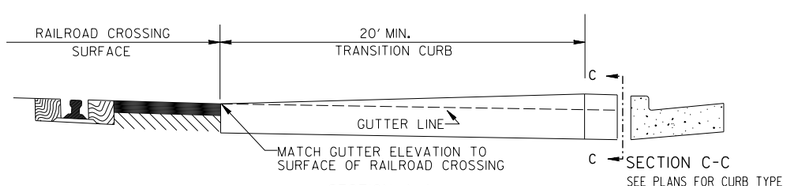

SECTION A-A

SECTION C-C

SEE PLANS FOR CURB TYPE AND STD 9032B FOR DETAILS.

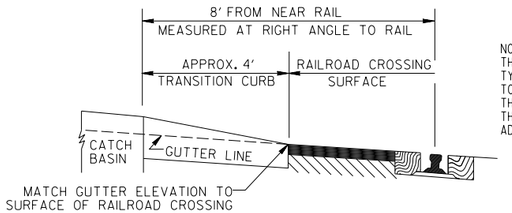

SECTION B-B

WHERE DRAINAGE (CATCH BASIN) IS REQUIRED

NOTE:
THE SECTIONS "A-A" AND "B-B" ARE TYPICAL OF ONE CONDITION AND TO BE USED FOR INFORMATION ONLY. THE CURB AND GUTTER SECTION TO THE GRADE CROSSING IS TO BE ADJUSTED AS DIRECTED BY THE ENGINEER.

MULTIPLE TRACKS

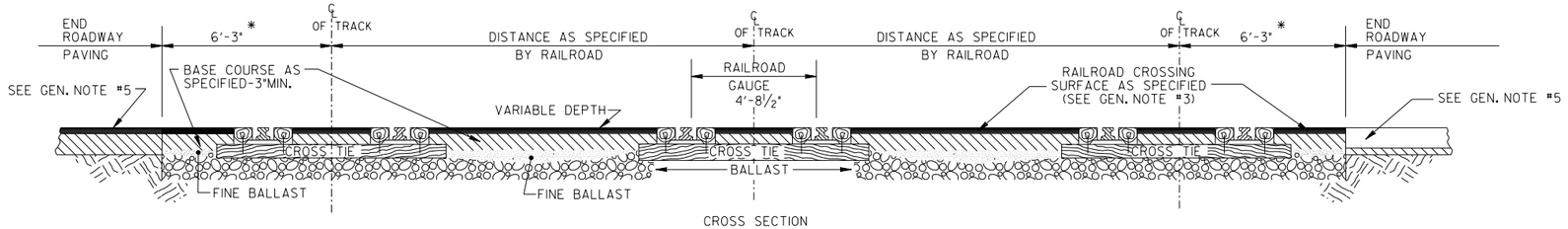

CROSS SECTION

DEPARTMENT OF TRANSPORTATION
STATE OF GEORGIA

STANDARD
RAILROAD GRADE CROSSING
PAVING
(& SIGNAL CONDUIT LOCATIONS)

NO SCALE — REV. & REDR. SEPT. 2016

DATE / REVISION / BY

DES. ____ (SUBMITTED) STATE DESIGN POLICY ENGINEER
DRW. ____
TRA. ____
CHK. ____
(APPROVED) Margaret B Pinkelo CHIEF ENGINEER

NUMBER 9021A

GDOT Georgia Department of Transportation | P. I. No. XXXXXXX

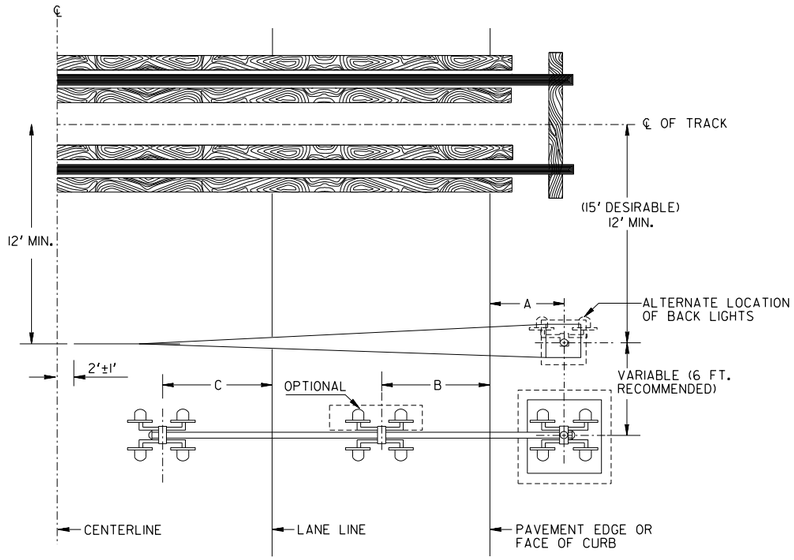

MULTI-LANE

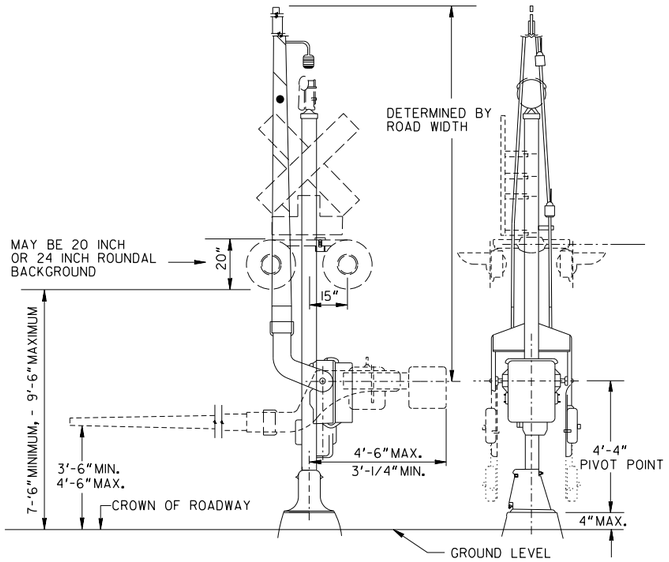

GATE ELEVATIONS

NOTE: GATE IN DOWN POSITION
SHALL BE 90° TO ROADWAY.

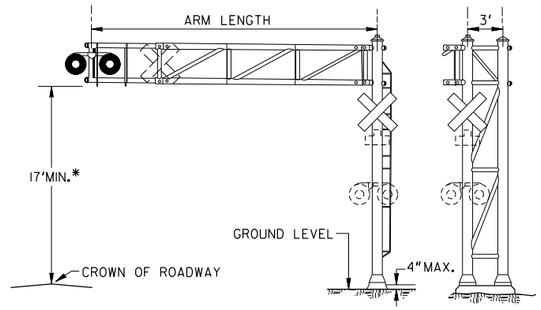

NON-ROTATABLE CANTILEVER

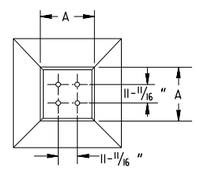

PLAN VIEW

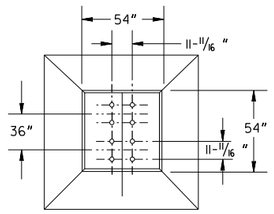

PLAN VIEW

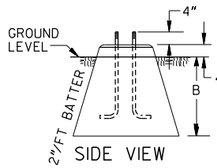

SIDE VIEW

CANTILEVER LENGTH (FT)	DIMENSION	
	A(IN)	B(IN)
8 TO 14	36	108
15 TO 24	42	108
25 TO 31	48	120

SINGLE MAST

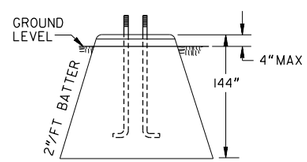

SIDE VIEW

DOUBLE MAST

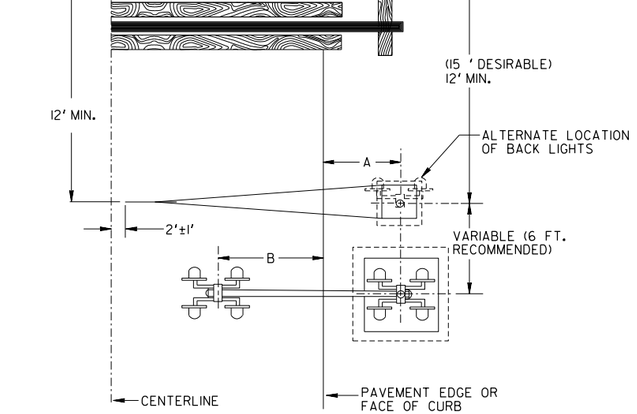

TWO LANE

NON-ROTATABLE CANTILEVER FOUNDATIONS

DIMENSION	WITH CURB OR CURB & GUTTER	WITHOUT CURB OR CURB & GUTTER	ROADWAY WITH PAVED SHOULDER	MULTI-LANE
A	4'-1" MIN. Ⓦ 20" ROUNDAL BACKGRD 4'-3" MIN. Ⓑ 24" ROUNDAL BACKGRD	8'-1" MIN. Ⓦ 20" ROUNDAL BACKGRD 8'-3" MIN. Ⓑ 24" ROUNDAL BACKGRD	2' FROM EDGE OF PAVEMENT OR 8'-3" FROM TRAVEL LANE WHICHEVER IS GREATER	——
B	3/4 LANE WIDTH MAX 2 FT MIN.	3/4 LANE WIDTH MAX 2 FT MIN.	——	——
C	——	——	——	3/4 LANE WIDTH MAX. 2 FT MIN.

SIGNAL EQUIPMENT LOCATION TOLERANCES

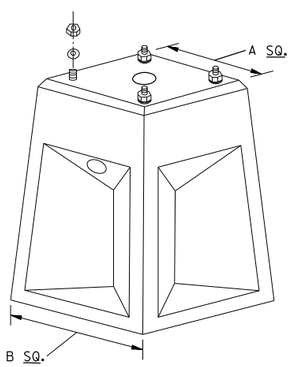

BOLT SPACING (IN)	ASSEMBLY NUMBER	A (IN)	B (IN)	HEIGHT (IN)	APPROXIMATE WEIGHT (LB)
II-11/16 X II-11/16	131718-X	19	30	48	1450
	131721-IX	22	28	54	1640
	131725-X	30-1/2	30-1/2	60	2000
	131725-IX	30-1/2	30-1/2	60	2000

ONE PIECE GATE FOUNDATIONS

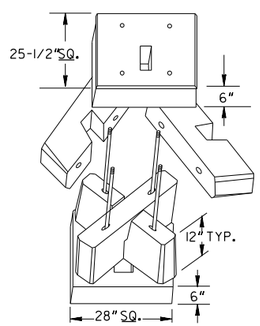

BOLT SPACING (IN)	ASSEMBLY NUMBER	ASSEMBLED HEIGHT (IN)	APPROXIMATE WEIGHT (LB.)
II-11/16 X II-11/16	131731-4X	48	1900
	131731-5X	60	2300
	131731-6X	72	2650
	131731-7X	84	3000
	131731-8X	96	3350

SECTIONAL GATE FOUNDATIONS

GENERAL NOTES:

1. ALL EQUIPMENT AND FOUNDATION SIZE DIMENSIONS ARE SHOWN FOR EXEMPLARY PURPOSES AND ARE NOT INTENDED TO SPECIFY ACTUAL SIZES. THE RAILROAD IS RESPONSIBLE FOR THE PROPER SIZE CANTILEVER AND GATE WITH THEIR RESPECTIVE FOUNDATIONS FOR EXISTING CONDITIONS.
2. THE PREFERRED EQUIPMENT LOCATION DIMENSIONS AS SHOWN ON THE PLAN MAY BE MODIFIED TO SUIT FIELD CONDITIONS WITHIN THE TOLERANCES SHOWN.
- ✳3. TO ESTABLISH OVERHEAD CLEARANCE FOR CANTILEVERED FLASHING LIGHTS ADD 9 FT. TO MIN. DIMENSION (HEIGHT OF MAN WITH ARM EXTENDED)

DEPARTMENT OF TRANSPORTATION
STATE OF GEORGIA

STANDARD
RAILROAD GRADE CROSSING GATES AND CANTILEVERS

DATE 11-22-94 | DIMENSION TOLERANCES REVISION | R.M.J. BY

NOT TO SCALE — REDRAWN JULY 2004 — SEPT 1982

DES. HWC (SUBMIT
DRW. ____
TRA. ____
CHK. ____
(APPRO

STATE TRAFFIC & SAFETY ENGINEER
Thomas D. Moreland
STATE HIGHWAY ENGINEER

NUMBER 9022A

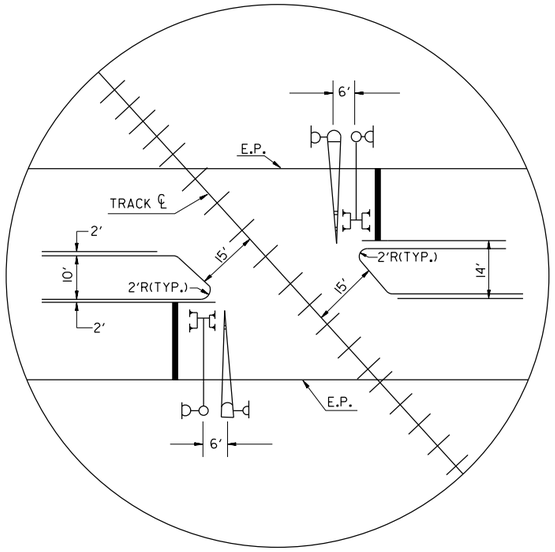

DETAIL MODIFIED FOR SKEW

N.T.S.

NOTE: DETAILS NOT SHOWN FOR SKEW SHALL BE AS SHOWN AT RIGHT.

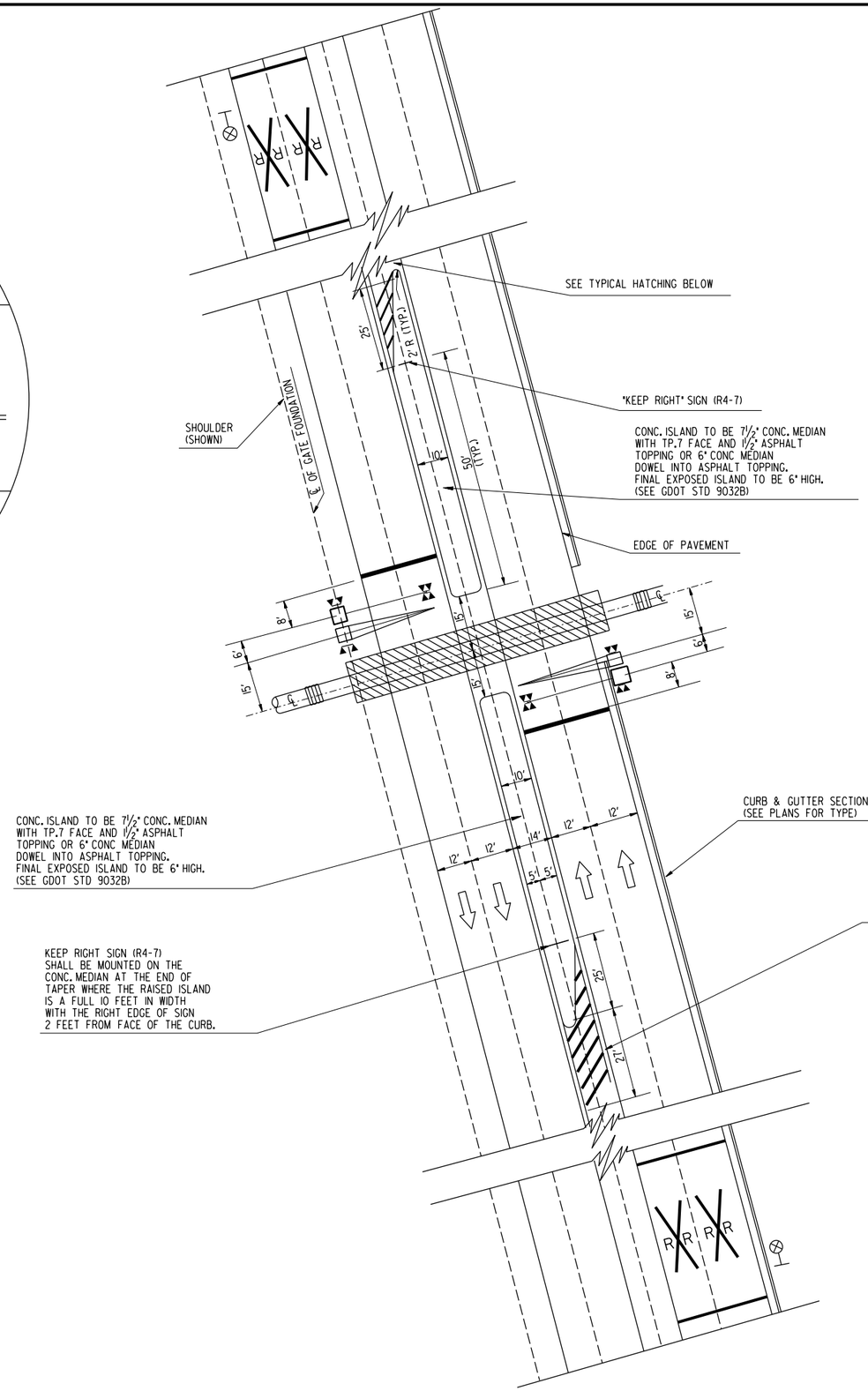

GENERAL NOTES:

1. SPECIFICATIONS: GEORGIA STANDARD, CURRENT EDITION, & SUPPLEMENTS THERETO.
2. FOR DETAILS OF GRADE CROSSING GATES AND CANTILEVERS, SEE GEORGIA STANDARD 9022A.
3. FOR DETAILS OF R.R. SIGNS & MARKINGS AT GRADE CROSSINGS, SEE GEORGIA DETAIL RR-01.

BY	DATE	REVISION
MRT	07-01-26	REVISED LINEWORK OF RAISED MEDIAN & MISC REVS

DEPARTMENT OF TRANSPORTATION
STATE OF GEORGIA

STANDARD

RAILROAD CROSSING AT HIGHWAY WITH A 14 FT. CENTER LANE

NOT TO SCALE — FEBRUARY 2008

DES. ____ DRW. ____ TRA. ____ CHK. ____

(SUBMITTED) Daniel C. Lass
STATE DESIGN POLICY ENGR.

(APPROVED) Margaret B. Fickle
CHIEF ENGINEER

NUMBER 9025A

GDOT Georgia Department of Transportation | P. I. No. XXXXXXX

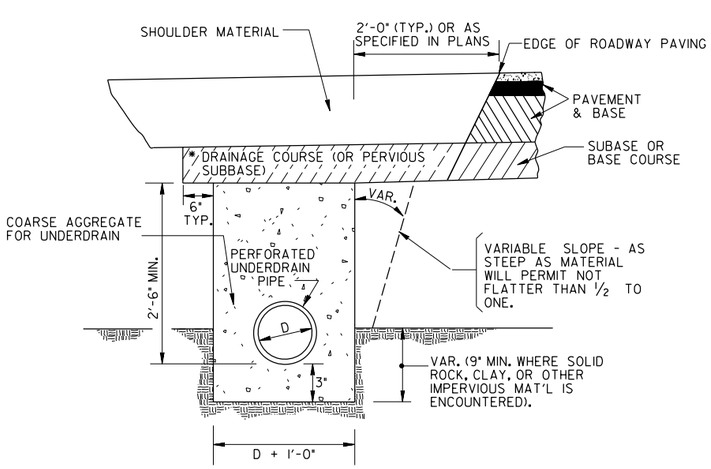

GENERAL DETAIL

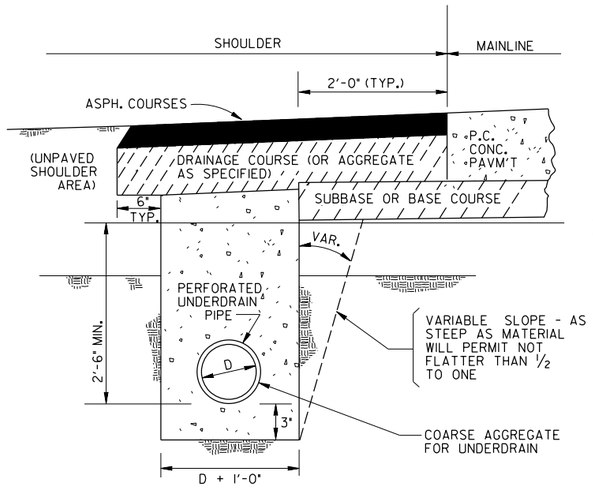

ASPHALT SHOULDER - P.C.C. PAVEMENT

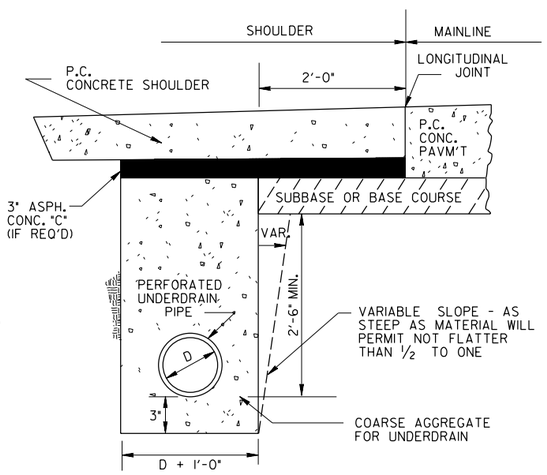

UNDER CONCRETE SHOULDER

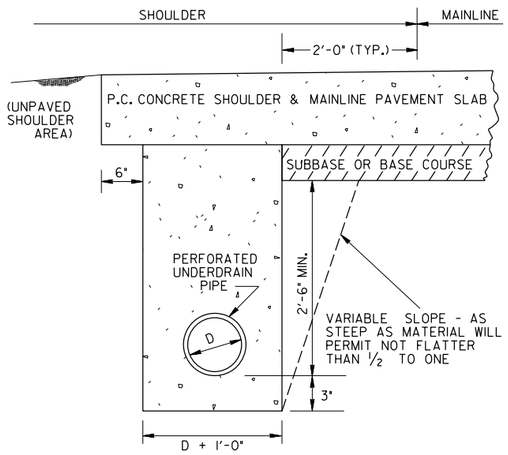

UNDER CONCRETE SHOULDER *

* CONSTRUCTED MONOLITHIC WITH MAINLINE 4'-0" PAVED SHOULDER SHOWN

PERFORATED UNDERDRAIN - TYPICAL INSTALLATIONS

*NOTE: PERFORATED UNDERDRAIN PIPE WILL BE INSTALLED COMPLETE PRIOR TO PLACING PERVIOUS SUB-BASE OR DRAINAGE COURSE.

SPECIAL NOTE:
DETAILS SHOWN HERE ARE TYPICAL AND MAY BE USED BY THE DESIGNER AS A GUIDE IN PREPARING TYPICAL SECTIONS. MINIMUM TRENCH DEPTHS & OTRENCH WIDTHS SHOULD BE ADHERED TO AS SHOWN. HOWEVER, SHOULDER DETAILS, PAVEMENT DESIGNS, DRAINAGE COURSES, ETC., WILL BE AS SHOWN ON THE TYPICAL SECTIONS FOR THE PROJECT AND MAY VARY FROM THE DEPICTIONS ABOVE.

ON CONSTRUCTION, THE TYPICAL SECTIONS IN THE PLANS SHOULD BE USED FOR SPECIFIC DETAILS. IF UNDERDRAIN IS NOT SHOWN ON THE TYPICAL SECTIONS OR ELSEWHERE IN THE PROJECT PLANS, INSTALLATION WILL BE AS SHOWN ABOVE AND AS DIRECTED BY THE ENGINEER.

GENERAL NOTES

1. UNDERDRAINS MAY BE PLACED IN SHOULDER AREAS OR AS TRANSVERSE DRAINAGE UNDER PAVEMENT. SEE TYPICAL SECTION AND PLAN AND PROFILE SHEETS FOR SPECIAL CONDOITIONS.
2. TRENCH SHALL BE SHAPED WITH SIDES AS NEARLY VERTICAL AS IS PRACTICAL AND WITH A FLAT BOTTOM.
3. MINIMUM GRADIENT FOR UNDERDRAIN PIPE SHALL BE 0.15%.
4. MAXIMUM DISTANCE BETWEEN OUTLETS SHALL BE 400' TO 500' WHERE CONDITIONS PERMIT.
5. DEAD ENDS OF PIPE SHALL BE CLOSED WITH METAL OR PLASTIC CAPS OR CONCRETE PLUGS. OUTFALL ENDS OF PIPE SHALL BE EQUIPPED WITH SCREEN.
6. LATERAL CONNECTIONS SHALL BE MADE WITH SUITABLE STANDARD FITTINGS. (ELLS, WYES OR TEES AS DETAILED)
7. THE DIMENSIONS (a thru g) SHOWN ON THE LATERAL CONNECTIONS FOR THE VARIOUS KINDS AND SIZES OF PERFORATED UNDERDRAIN SHALL BE IN AGREEMENT WITH THE MANUFACTURERS' STANDARD PRACTICE.
8. PLAIN WHITE (NO REFLECTIVE SHEETING) FLEXIBLE DELINEATOR POSTS WILL BE REQUIRED AT ALL OUTLETS EXITING ON SLOPES, BUT NOT REQUIRED IF UNDERDRAIN EXITS IN CONC. DITCH PAVING, DROP INLETS, ETC.. POSTS WILL BE 2 FT. IN THE GROUND PLACED AS DIRECTED BY THE ENGINEER, SO AS TO BE MOST VISIBLE TO MOWERS. PAYMENT FOR UNDERDRAIN WILL INCLUDE THE DELINEATORS.

OUTLET DETAIL FOR PLASTIC UNDERDRAIN

(REQUIRED AT ALL OUTLETS WHERE PERFORATED PLASTIC UNDERDRAIN IS TERMINATED ON SLOPES).

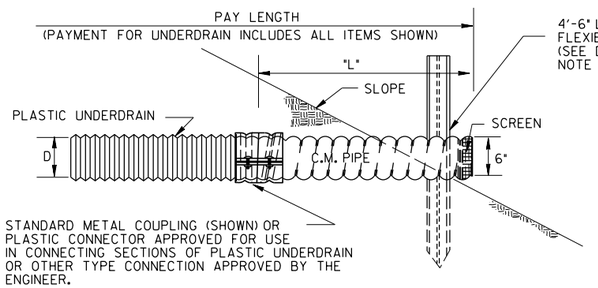

NOTE: "L" = MINIMUM LENGTH OF CORRUGATED METAL PIPE SECTION. THE C.M. OUTLET STUB SECTION MAY BE PERFORATED OR MAY BE NON-PERFORATED.

C.M. OUTLET STUB -MINIMUM LENGTHS	
SLOPE	"L"
2:1 OR STEEPER	2'-10" MIN.
2+:1 TO 4:1	5'-0" MIN.
4+:1 TO 6:1	10'-0" MIN.
FLATTER THAN 6:1	14'-0" MIN.

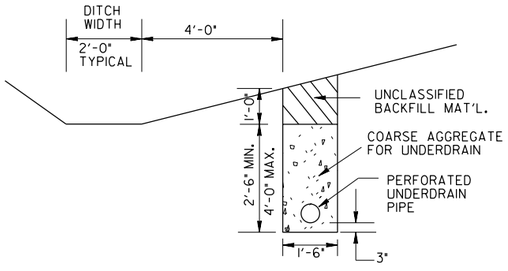

ADJACENT TO DITCH

NOTE: ALTERNATE FLEXIBLE DELINEATORS PERMITTED IF APPROVED BY THE D.O.T. LABORATORY.

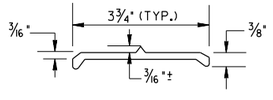

DELINEATOR POST SECTION (TYP.)

COLOR: WHITE

LENGTH: 4'-6" (from top to bottom point)

SPECIFICATION: SEC.911 (EXCEPT REFLECTIVE SHEETING IS NOT REQUIRED)

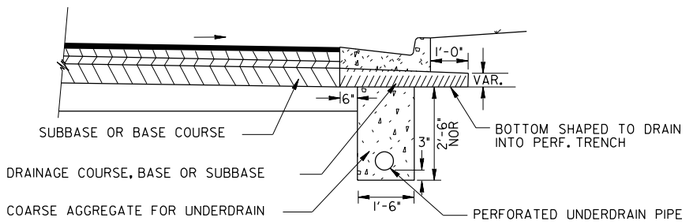

UNDER CURB & GUTTER

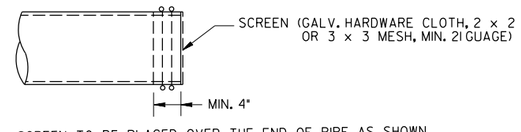

SCREEN TO BE PLACED OVER THE END OF PIPE AS SHOWN AND SECURED FIRMLY IN PLACE BY WRAPPING GALVANIZED WIRE AROUND PIPE AND SCREEN. OTHER METHODS FOR SECURING SCREEN FIRMLY OVER END OF PIPE MAY BE USED IF APPROVED BY THE ENGINEER.

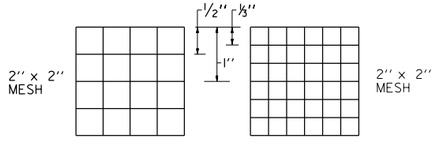

SCREEN FOR UNDERDRAIN

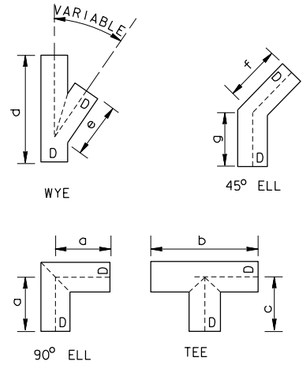

DATE	REVISION	BY
8-17-83	ADD C&G, DITCH INSTALL	R.M.U.
5-27-81	ADD MONOLITHIC CONC. SH.	R.M.U.
1-20-81	FLEXIBLE DELINEATOR	R.M.U.

DEPARTMENT OF TRANSPORTATION
STATE OF GEORGIA

STANDARD

PERFORATED UNDERDRAIN

NOT TO SCALE | REDRAWN JULY 2024 | JULY 1980

REV. R.M.U.
TRA. G.M.E.
CHK. R.K.C.

(SUBMITTED) STATE ROAD & AIRPORT DESIGN ENGR.

(APPROVED) CHIEF ENGINEER

NUMBER 9029B

STATE	PROJECT NUMBER	SHEET NO.	TOTAL SHEETS
GA.			

SEE T-22A and T-22B FOR BRIDGE DELINEATION DETAILS

LOCATION OF OBJECT MARKERS AT CULVERT ENDS

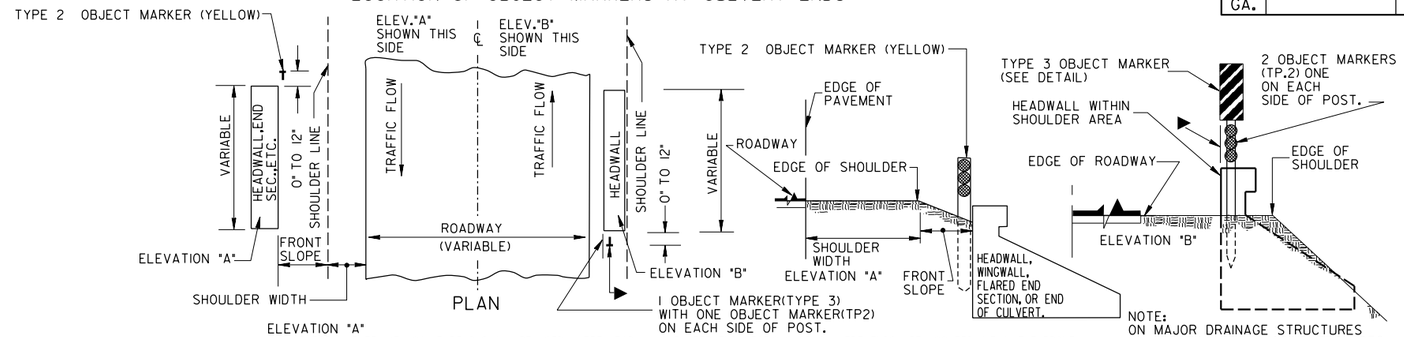

ELEVATION "A"
ONE OBJECT MARKER (YELLOW) (TYPE 2) SHALL BE USED WHERE HEADWALLS, FLARED END SECTIONS, OR CULVERT ENDS ARE LOCATED WITHIN THE FRONT SLOPE AS SHOWN IN ELEVATION "A" DETAIL.

ELEVATION "B"
A COMBINATION OF ONE OBJECT MARKER (TYPE 3) AND TWO OBJECT MARKERS (YELLOW) (TYPE 2), ONE ON EACH SIDE OF THE POST, SHALL BE USED WHERE HEADWALLS OF CULVERTS ARE LOCATED WITHIN THE EXISTING SHOULDER AREA AS SHOWN IN ELEVATION "B" DETAIL.

▶ = THE INSIDE EDGE OF THE MARKER SHALL BE IN LINE WITH THE INNER EDGE OF THE OBSTRUCTION

NOTE:
ON MAJOR DRAINAGE STRUCTURES ON FEDERAL RESURFACING PROJECTS, WHEN ELEVATION "B" EXISTS, THE FIELD REVIEW TEAM WILL RECOMMEND WHICH TO USE; GUARDRAIL, ADDITIONAL DELINEATION, OR EXTENSION OF DRAINAGE STRUCTURE.

RECOMMENDED SPACING FOR DELINEATORS

DELINEATORS SHOULD NORMALLY BE SPACED 528' APART. WHERE SUCH IS INTERRRUPTED BY DRIVEWAYS, CROSSROADS, ETC., AND WHERE UNDER THE NORMAL SPACING, A DELINEATOR WOULD FALL WITHIN SUCH AN AREA, THAT DELINEATOR MAY BE MOVED IN EITHER DIRECTION A DISTANCE NOT EXCEEDING 1/4 OF THE NORMAL SPACING (132'). IF SUCH DELINEATOR STILL FALLS WITHIN THAT AREA, IT SHOULD BE ELIMINATED. SEE TABLE BELOW FOR RECOMMENDED SPACING OF HORIZONTAL CURVES.

TABLE SPACING (1) FOR DELINEATORS ON HORIZONTAL CURVES

RADIUS OF CURVE (IN FEET)	SPACING ON CURVE (IN FEET)	SPACING IN ADVANCE & BEYOND CURVE (IN FEET) (MAINLINE ONLY)		
		1ST	2ND	3RD
50	20	40	65	125
150	30	60	90	180
200	35	70	110	215
250	40	85	125	250
300	50	95	145	290
400	55	110	170	300
500	65	125	190	300
600	70	140	210	300
700	75	150	230	300
800	80	165	245	300
900	85	175	260	300
1000	90	185	275	300

(1) SPACING, S, FOR SPECIFIC RADII NOT SHOWN MAY BE INTERPOLATED FROM THE TABLE OR COMPUTED FROM THE FORMULA $S=3\sqrt{R-50}$, WHERE R IS THE RADIUS OF CURVATURE IN FT. AND S IS ROUNDED TO THE NEAREST 5 FT. THE SPACING TO THE FIRST DELINEATOR IN ADVANCE OF THE CURVE IS 2S, TO THE SECOND 3S, AND THE THIRD 6S, BUT NONE TO EXCEED 300 FEET, MINIMUM SPACING IS 20 FEET.

DELINEATOR ERECTION DETAILS

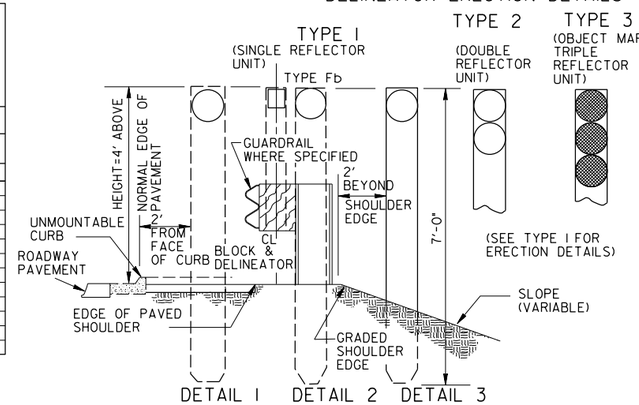

NOTE: ERECTION DETAILS ABOVE ARE TYPICAL FOR ALL TYPES EXCEPT 1A, 2A, 3A, & Fb, WHICH ARE MOUNTED ON THE POST OR STRUCTURE ALREADY IN PLACE.

DETAIL 1: ERECTION FOR ROADWAYS HAVING UNMOUNTABLE CURBS.

DETAIL 2: ERECTION FOR ROADWAY WITH GUARDRAIL, DELINEATOR POST SHALL BE IN THE SAME PLANE AS FACE OF GUARDRAIL POSTS, EXCEPT FOR TYPE Fb, AS SHOWN, AND POSSIBLY AT BRIDGE ENDS AS INDICATED ABOVE.

DETAIL 3: ERECTION FOR ROADWAYS HAVING SHOULDERS (WITHOUT CURBS). WITH MOUNTABLE CURBS, ERECTION SHALL BE SAME AS DETAIL 3.

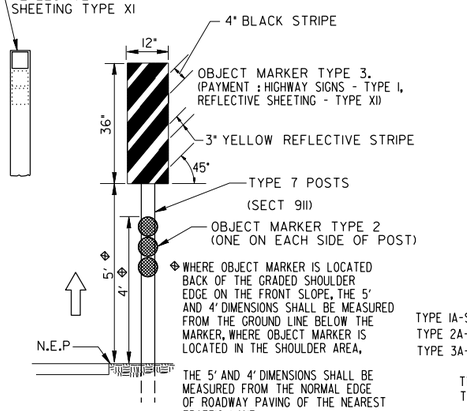

DETAIL OF OBJECT MARKER

TYPES OF DELINEATORS

TYPE 1- ALUMINUM OR GALVANIZED STEEL FLANGED "U" CHANNEL POST WITH SINGLE REFLECTOR UNIT. REFLECTOR UNIT TO CONSIST OF: (A) ONE 3" DIAMETER SEALED PRISMATIC REFLEX REFLECTOR WITH PLATE AND FRAME, OR, (B) ONE 4" X 5" RECTANGULAR TYPE I, LEVEL A REFLECTIVE SHEETING REFLECTOR WITH PLATE AND FRAME, OR (C) ONE 3 1/4" DIAMETER CENTER MOUNT SEALED PRISMATIC REFLEX REFLECTOR HOUSED IN ALUMINUM BACKING WITH SINGLE GROMMETTED HOLE IN CENTER OF REFLECTOR.

TYPE 2 - ALUMINUM OR GALVANIZED STEEL FLANGED "U" CHANNEL POST WITH DOUBLE REFLECTOR UNIT. REFLECTOR UNIT TO CONSIST OF: (A) TWO 3" DIAMETER SEALED PRISMATIC REFLEX REFLECTORS WITH PLATE AND FRAME, OR, (B) TWO 4" X 5" RECTANGULAR TYPE I, LEVEL A REFLECTIVE SHEETING REFLECTORS WITH PLATE AND FRAME, OR (C) TWO 3 1/4" DIAMETER CENTER MOUNT SEALED PRISMATIC REFLEX REFLECTOR HOUSED IN ALUMINUM BACKING WITH SINGLE GROMMETTED HOLE IN CENTER OF EACH REFLECTOR.

TYPE 3 - ALUMINUM OR GALVANIZED STEEL FLANGED "U" CHANNEL POST WITH TRIPLE REFLECTOR UNIT. REFLECTOR UNIT TO CONSIST OF: (A) THREE 3" DIAMETER SEALED PRISMATIC REFLEX REFLECTORS WITH PLATE AND FRAME, OR, (B) THREE 4" X 5" RECTANGULAR TYPE I, LEVEL A REFLECTIVE SHEETING REFLECTORS WITH PLATE AND FRAME, OR (C) THREE 3 1/4" DIAMETER CENTER MOUNT SEALED PRISMATIC REFLEX REFLECTORS HOUSED IN ALUMINUM BACKING WITH SINGLE GROMMETTED HOLE IN CENTER OF EACH REFLECTOR.

TYPE 1A-SINGLE
TYPE 2A-DOUBLE
TYPE 3A-TRIPLE
REFLECTOR UNIT ONLY MOUNTED ON POST OR STRUCTURE ALREADY IN PLACE. REFLECTOR UNIT SAME AS FOR TYPE 1, 2, AND 3, RESPECTIVELY.

TYPE Fa -
TYPE Fb -
FLEXIBLE DELINEATOR POSTS SHALL BE USED AT LOCATIONS WHERE HIGH FREQUENCY OF HITS ARE CONTEMPLATED, SUCH AS GORE AREAS, OUTSIDE OF SHARP CURVES, ETC., AND MAY ALSO BE USED AS ALTERNATIVES TO EITHER TYPE 1, TYPE 2, OR TYPE 3 DELINEATORS WHEN SPECIFIED ON THE PLANS. DIFFERENT DESIGN FLEXIBLE DELINEATORS PERMITTED, IF APPROVED BY THE GA. D.O.T. OFFICE OF MATERIALS AND RESEARCH.

LOCATION OF DELINEATORS ON FREEWAY & EXPRESSWAY TYPE HIGHWAYS

TYPES OF DELINEATORS, ERECTION LOCATION, AND SPACING SHALL BE AS FOLLOWS.

○ SINGLE CRYSTAL (WHITE) REFLECTOR UNITS (TYPE 1 DELINEATOR) ON RIGHT SIDE OF MAINLINE AT 528 FOOT SPACING & ON RT. SIDE OF RAMP TGT. SECTIONS AT 100 FOOT SPACING FROM PHYSICAL CORE TO RAMP TERMINUS.

○○ DOUBLE CRYSTAL (WHITE) REFLECTOR UNITS (TYPE 2 DELINEATOR) ON RIGHT SIDE OF SPEED CHANGE (ACCELERATION & DECELERATION) LANES THAT ARE ON RIGHT SIDE OF MAINLINE AT 100 FOOT SPACING FROM TAPER TO PHYSICAL CORE.

● (YELLOW) SINGLE YELLOW REFLECTOR UNITS (TYPE 1 DELINEATOR) ON LEFT SIDE OF RAMP HORIZONTAL CURVES & ON LEFT SIDE OF MAINLINE HORIZONTAL CURVES GREATER THAN 3° CURVATURE.

●● (YELLOW) DOUBLE YELLOW REFLECTOR UNITS (TYPE 2 DELINEATOR) ON LEFT SIDE OF SPEED CHANGE (ACCELERATION & DECELERATION) LANES THAT ARE ON LEFT SIDE OF MAINLINE AT 100 FOOT SPACING FROM TAPER TO PHYSICAL CORE.

● (RED) SINGLE REFLECTOR UNITS (TYPE 1 DELINEATOR) ON LEFT SIDE OF EXIT RAMPS AT 100 FOOT SPACING FROM "WRONG WAY" SIGN TO RAMP TERMINUS. USE TYPE 1A RED DELINEATORS ON RIGHT OR LEFT SIDE OF EXIT RAMPS WHERE TYPE 1 WHITE OR YELLOW DELINEATORS ARE USED FACE OF RED DELINEATORS ORIENTED OPPOSITE TO NORMAL TRAFFIC FLOW.

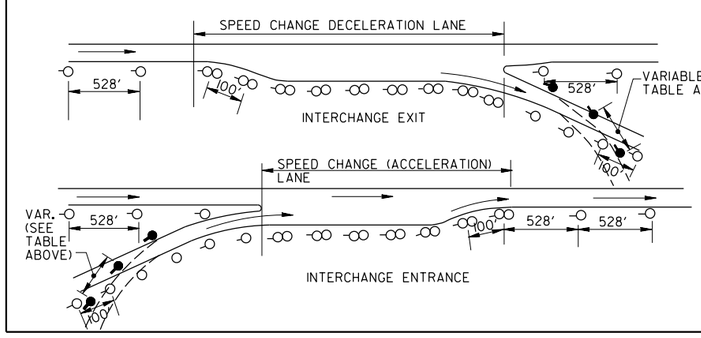

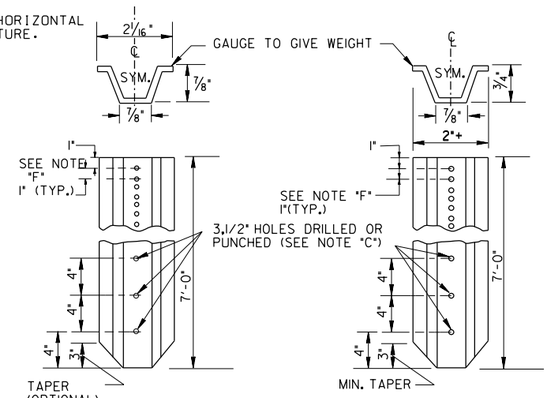

(ALTERNATES ALLOWABLE IF LISTED IN GA. D.O.T. OPL LIST.)

STEEL FLANGED "U" CHANNEL POST (1.12 LBS./FT.) (GALVANIZED)

ALUMINUM FLANGED "U" CHANNEL POST (0.78 LBS/FT.)

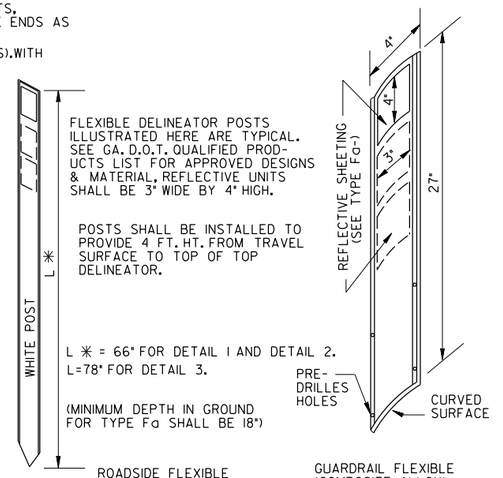

GENERAL NOTES:

A- SPECIFICATIONS: GA. STANDARD, CURRENT EDITION, & SUPPLEMENTS THERETO.

B- REFLECTORS FOR TYPES 1 AND 1A SHALL BE CRYSTAL (WHITE), YELLOW OR RED, AS SPECIFIED ON THE PLANS. REFLECTORS FOR TYPES 2 AND 2A SHALL BE CRYSTAL (WHITE) OR YELLOW AS SPECIFIED ON THE PLANS. REFLECTORS FOR TYPE 3 AND 3A SHALL BE YELLOW ONLY AS SPECIFIED ON THE PLANS.

C- WHEN POSTS ARE SET IN CONCRETE, METAL RODS SHALL BE INSERTED IN 3 1/2" DIA. HOLES LOCATED AT BOTTOM OF POST. MIN SIZE OF RODS SHALL BE 1/4" DIA. X 3" LONG.

D- MONODIRECTIONAL DELINEATORS SHALL BE USED AND ERECTED AT THE RECOMMENDED SPACING, UNLESS OTHERWISE SPECIFIED ON THE PLANS.

E- FOR ADDITIONAL DATA ON DELINEATORS, REFER TO THE MANUAL ON UNIFORM TRAFFIC CONTROL DEVICES AND ALL SUPPLEMENTS THERETO.

F- DRILL OR PUNCH 17, 3/8" DIA. HOLES ON 1" CENTERS FOR A DISTANCE OF 17" MINIMUM FROM TOP POST.

BY	DATE	REVISION
ACP	07-2022	UPDATED SIGN REFLECTIVITY
GLO	4-10-06	REV. OBJECT MARKER TYPE.
		DELETED DETAIL AND REV.
		REFLECTIVE SHEETING TYPE.

DEPARTMENT OF TRANSPORTATION
STATE OF GEORGIA

STANDARD
DELINEATORS & MARKERS AND ALTERNATE POSTS

NO SCALE — REV. & REDR. MAR., 2001

DES. ____ REV. ____ TRA. ____ CHK. ____

(SUBMITTED) STATE ROAD & AIRPORT DESIGN ENGINEER

(APPROVED) CHIEF ENGINEER

NUMBER 9030C

GDOT Georgia Department of Transportation | P. I. No. XXXXXXX

DETAILS OF GROUTED RUBBLE SPILLWAYS (OR APRONS)

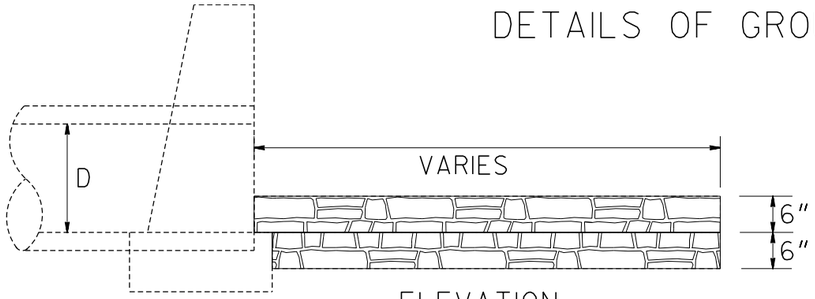

ELEVATION

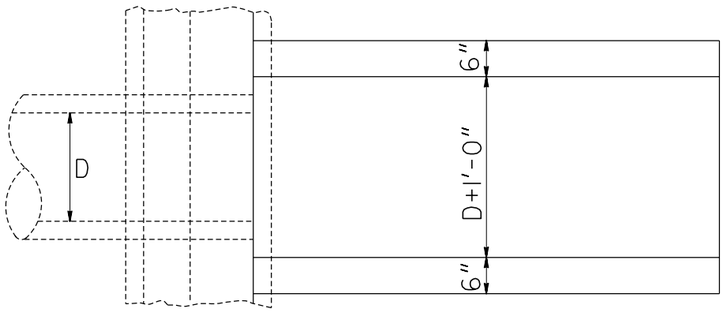

PLAN

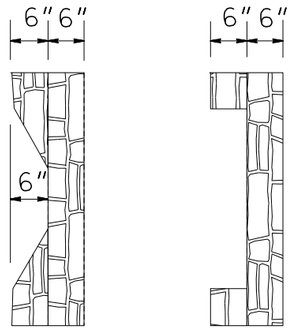

ELEVATION

ALTERNATE

USED WITH STRAIGHT HEADWALL

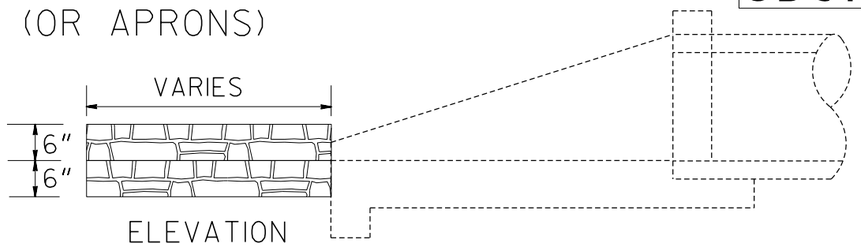

ELEVATION

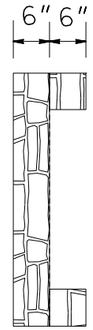

ELEVATION

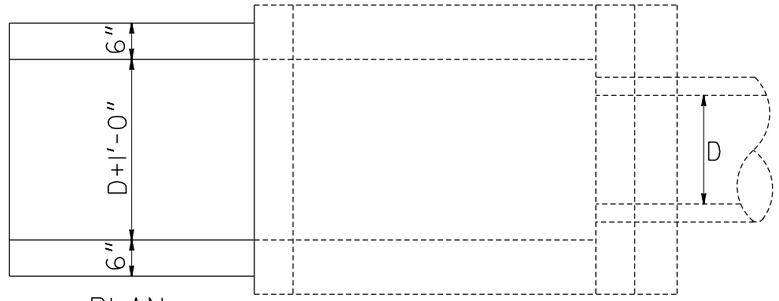

PLAN

USED WITH "U" TYPE HEADWALL

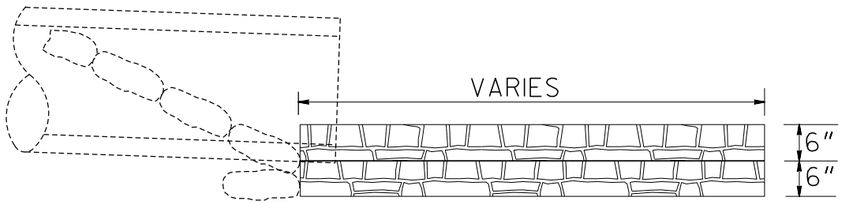

ELEVATION

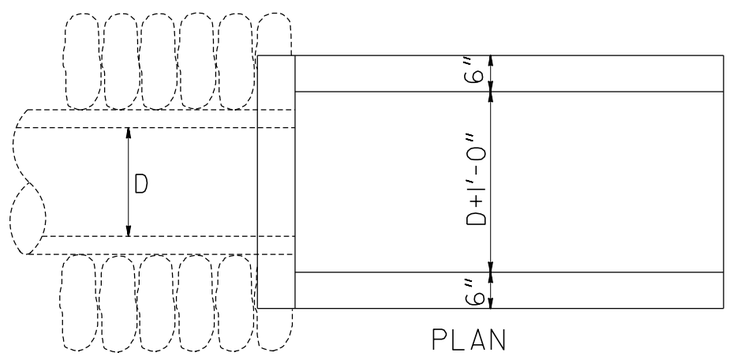

PLAN

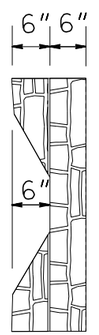

ELEVATION

USED WITH SAND CEMENT BAG RIPRAP ENDWALL

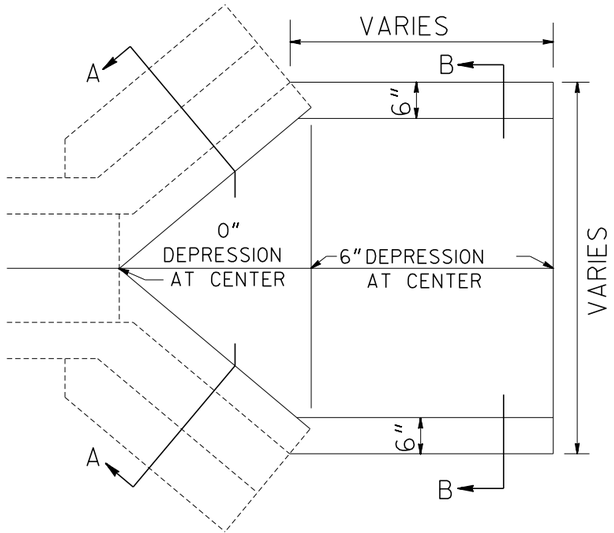

PLAN

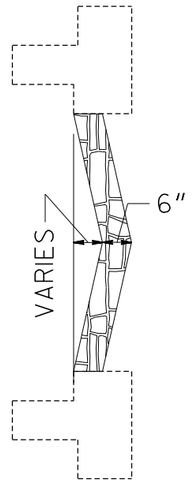

SECTION "A-A"

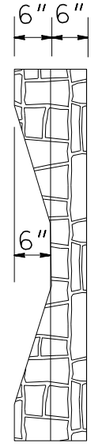

SECTION "B-B"

USED WITH CONCRETE BOX CULVERT

NOTE: SPILLWAY MAY BE COMPOSED OF EITHER STONE OR CONCRETE THAT HAS BEEN REMOVED FROM STRUCTURES. MINIMUM SIZE OF STONE OR CONCRETE PIECES TO BE 6" x 12".

BY	REVISION	DATE
A.V.S.	DELETE BASIS OF PAYMENT	2-15-66

DEPARTMENT OF TRANSPORTATION
STATE OF GEORGIA

STANDARD CONSTRUCTION DETAILS
GROUTED RUBBLE SPILLWAYS (OR APRONS)

NOT TO SCALE REDRAWN JULY 2024 JANUARY 1958

DESIGNED CEB
TRACED CEB
CHECKED HAS
REVISED

SUBMITTED STATE ROAD DESIGN ENGINEER
APPROVED STATE HIGHWAY ENGINEER

NUMBER 9031G

GDOT Georgia Department of Transportation | P. I. No. XXXXXXX

DETAIL FOR PLUGGING DRILLED WELL

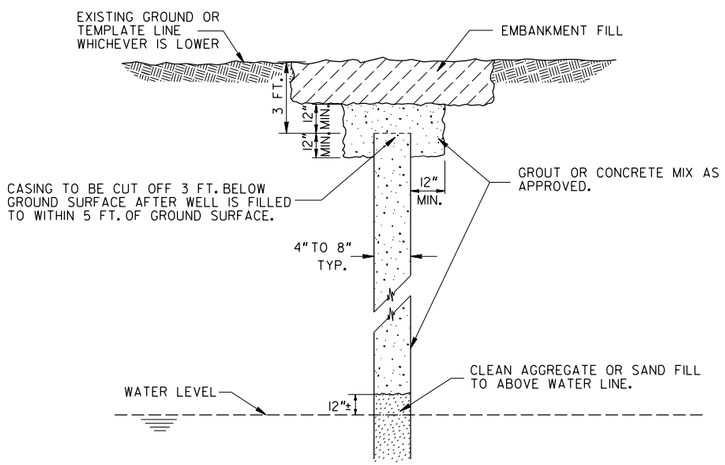

NOTES:
ALL ABANDONED WELLS WITHIN THE RIGHT OF WAY OR CONSTRUCTION EASEMENTS SHALL BE PLUGGED BEFORE ANY OTHER ACTIVITY BEGINS.

ALL COSTS FOR FILLING AND PLUGGING WELLS SHALL BE INCLUDED IN PAYMENT FOR OTHER ITEMS.

DETAIL OF CONCRETE SLAB WELL COVER

NOTE: ALL ABANDONED WELLS WITHIN THE R/W AND CONSTRUCTION EASEMENTS SHALL BE FILLED.

NOTE:
DETAILS SHOWN ARE APPLICABLE FOR TYPICAL SIZE DUG WELLS, IF WELL OPENING IS TOO LARGE TO ALLOW 1 FT. MIN. BEARING AREA ALL AROUND, THE SLAB SIZE SHALL BE INCREASED PER PLANS OR AS DIRECTED BY ENGINEER.

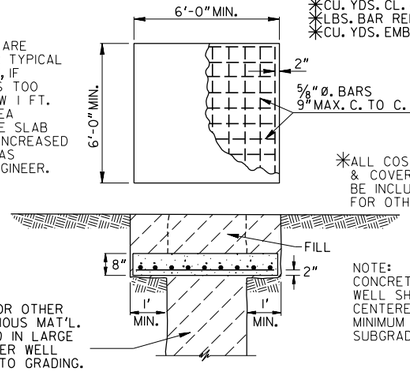

TYPICAL QUANTITIES:
✳CU. YDS. CL. A CONC. - 0.89
✳LBS. BAR REINF. STEEL - 107
✳CU. YDS. EMBANKMENT - (VARIES)

✳ALL COSTS FOR FILLING & COVERING WELL SHALL BE INCLUDED IN PAYMENT FOR OTHER ITEMS.

NOTE:
CONCRETE SLAB REQ'D. OVER WELL SHALL BE PLACED CENTERED OVER WELL TO A MINIMUM DEPTH OF 2'-6" BELOW SUBGRADE

DETAIL OF TURNOUTS - RURAL

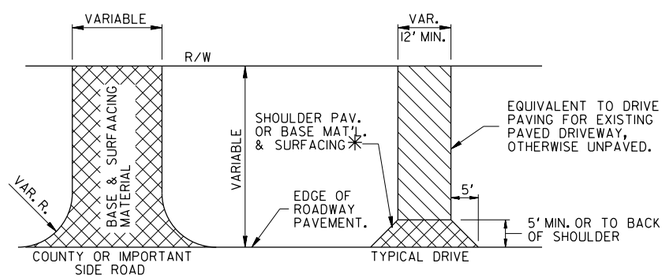

ALL TURNOUTS ARE TO BE CONSTRUCTED AS DIRECTED BY THE ENGINEER.

IN GENERAL, 30' RADII ARE TO BE USED FOR COUNTY ROADS AND MAY BE INCREASED UP TO 50' ON IMPORTANT COUNTY ROADS, WHERE NECESSARY, TO TAKE CARE OF TURNING MOVEMENTS.

✳DRIVEWAY PAVING MAY BE OMITTED ON LOWER CLASS ROADS.

STATIONING OF CONCRETE PAVEMENT

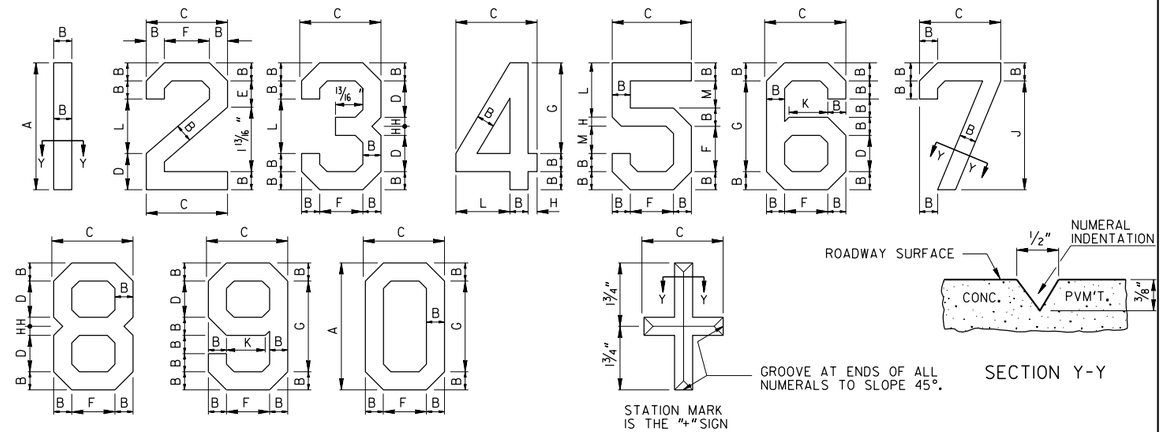

DIMENSIONS FOR NUMERALS (INCHES)											
A	B	C	D	E	F	G	H	J	K	L	M
3 1/2	1/2	2 1/4	1	11/16	1 1/4	2 1/2	1/4	3	1 1/8	1/2	3/4

DETAILS OF NUMERALS AND STATION MARK "+"

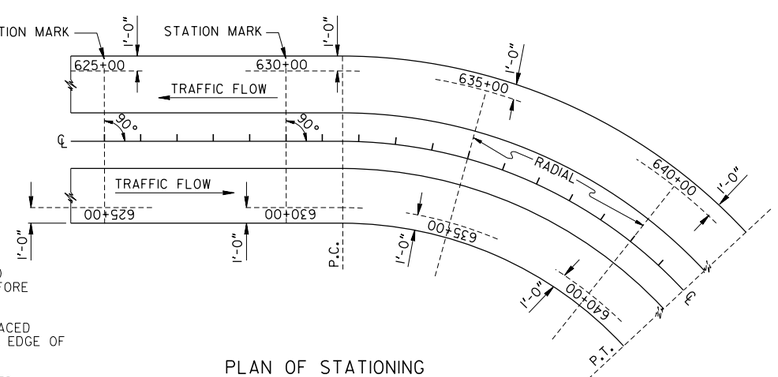

NOTE: EVERY FIFTH STATION SHALL BE STAMPED IN CONCRETE PAVEMENT WITH DIES JUST BEFORE THE INITIAL SET.

UNDIVIDED HIGHWAYS - STATIONING SHALL BE PLACED WITHIN A ONE FOOT STRIP ALONG THE EDGE OF PAVEMENT, RIGHT OF THE ℄.

DIVIDED HIGHWAYS - STATIONING SHALL BE PLACED WITHIN A ONE FOOT STRIP ALONG THE OUTER EDGE OF PAVEMENT, RIGHT AND LEFT OF THE ℄.

PLAN OF STATIONING

BY	REVISION	DATE
R.M.J.	DES. DRILL WELL PLUG	10-7-87
R.M.J.	ADD NOTES WELL COVER	8-1-85
R.M.J.	MIN. 30' R FOR CO. RD.	11-16-83

DEPARTMENT OF TRANSPORTATION
STATE OF GEORGIA

STANDARD

DETAIL FOR PLUGGING DRILLED WELL
STATIONING OF CONCRETE PAVEMENT
CONCRETE SLAB WELL COVER
DETAIL OF TURNOUTS-RURAL

NOT TO SCALE REDRAWN JULY 2024 NOVEMBER 1979

DES. DEC.'57
RETRACED
C.M.E.
NOV.'79

(SUBMITTED) STATE ROAD & AIRPORT DESIGN ENGR.

(APPROVED) STATE HIGHWAY ENGINEER.

NUMBER 9031H

STATE	PROJECT NUMBER	SHEET NO.	TOTAL SHEETS
GA.			

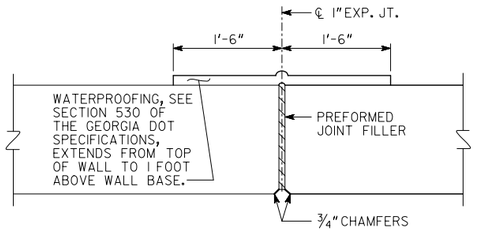

DETAIL OF EXPANSION JOINT

SEE GENERAL NOTE #3

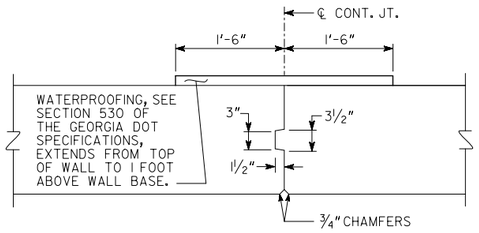

DETAIL OF CONTRACTION JOINT

SEE GENERAL NOTE #3

(A) - SLOPED BACKFILL WITH DITCH
(B) - FLAT BACKFILL
(C) - DITCH DEPTH, 6"- 12" TYPICAL
SEE PLANS FOR DESIGN

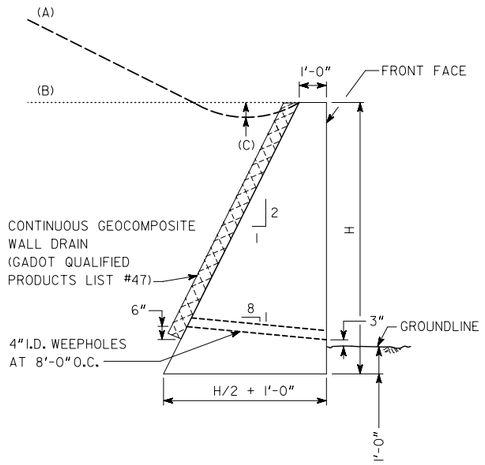

TYPICAL SECTION A

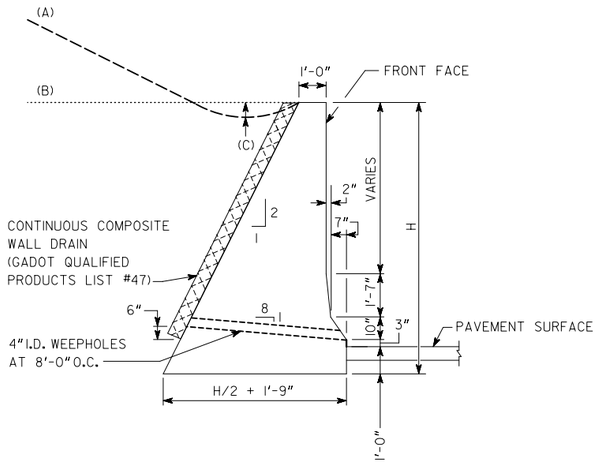

TYPICAL SECTION B

(NEW JERSEY BARRIER FACE)

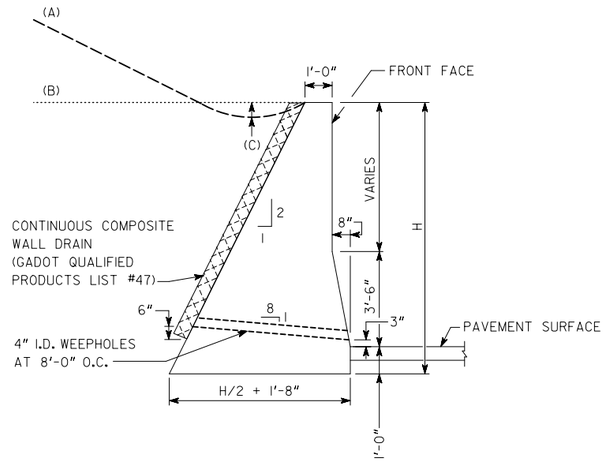

TYPICAL SECTION C

(SINGLE SLOPE BARRIER FACE)

MAXIMUM "H" *			
BACKSLOPE	TYP. SECTION A	TYP. SECTION B **	TYP. SECTION C **
FLAT	8'-6"	10'-0"	10'-0"
SLOPE TO 4:1	6'-3"	7'-0"	7'-0"
SLOPE TO 2:1	4'-6"	4'-9"	4'-9"

* GREATER "H" PERMITTED IF APPROVED BY BRIDGE DESIGN.

** TYPICAL SECTION B SHALL HAVE A MINIMUM H OF 3'-8"
TYPICAL SECTION C SHALL HAVE A MINIMUM H OF 4'-6"

GENERAL NOTES:

1. GRAVITY WALLS SHALL NOT BE USED WHEN HORIZONTAL DISTANCE FROM EDGE OF TRAVEL WAY TO FRONT FACE OF WALL IS LESS THAN (H + 1'0").
2. GRAVITY WALLS DESIGNED FOR THE FOLLOWING SOIL PROPERTIES:

	FOUNDATION	BACKFILL
COHESION =	0 PSF	0 PSF
θ =	28°	28°
UNIT WEIGHT =	120 PCF	120 PCF

3. EXPANSION JOINTS SHALL BE LOCATED AT A MAXIMUM SPACING OF 90'-0" AND EXTEND THROUGH THE WALL. CONTRACTION JOINTS SHALL BE LOCATED AT A MAXIMUM SPACING OF 30'- 0".
4. GRAVITY WALLS WITH A VERTICAL FRONT FACE SHALL BE PAID FOR AS "CLASS B CONCRETE OR MORTAR RUBBLE MASONRY, RETAINING WALL". GRAVITY WALLS WITH A BARRIER FRONT FACE SHALL BE PAID FOR AS "CLASS A CONCRETE, RETAINING WALL". WATERPROOFING, JOINT FILLER, WALL DRAIN, AND OTHER INCIDENTAL ITEMS SHALL BE INCLUDED IN OVERALL BID SUBMITTED.
5. A CONCRETE DITCH DETAIL FOR THE TOP OF THE WALL SHOULD BE INCLUDED IN THE ROADWAY PLANS WHEN WATER IS FLOWING TOWARDS THE BACK OF THE WALL. SEE CONSTRUCTION DETAIL D-49.
6. FINISH EXPOSED SURFACES OF THE WALL WITH A TYPE III FINISH.
7. APPLY GRAFFITI PROOF COATING AS PER SECTIONS 500 AND 838 OF THE GEORGIA DOT SPECIFICATIONS.
8. ALL NECESSARY FENCE AND HANDRAIL SHOULD BE INCLUDED IN THE ROADWAY PLANS WHEN APPROPRIATE.
9. GRAVITY WALL TYPICAL SECTIONS A, B, AND C HAVE BEEN DESIGNED PER THE AASHTO LRFD BRIDGE DESIGN SPECIFICATIONS, 7TH EDITION, 2014.

DETAIL FOR RAISING HEADWALL

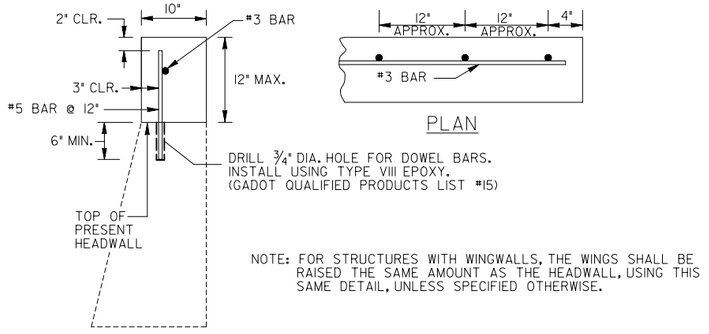

PLAN

SECTION

NOTE: FOR STRUCTURES WITH WINGWALLS, THE WINGS SHALL BE RAISED THE SAME AMOUNT AS THE HEADWALL, USING THIS SAME DETAIL, UNLESS SPECIFIED OTHERWISE.

TYPICAL PIPE PLUG

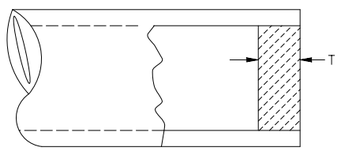

SECTION

NOTE: PLAN PAY QUANTITIES ARE TO REFLECT PIPE PLUGS AS CU. YDS. OF CL. B CONCRETE. ON CONSTRUCTION PLUGS MAY BE BUILT WITH BRICK MASONRY, MORTAR RUBBLE MASONRY, CL. A CONC., OR CL. B CONC. WITH NO ADJUSTMENT IN PAYMENT MADE FOR ALTERNATES.

D	T (MIN)	PIPE PLUG (CU. YDS.)
12"	8"	0.0194
15"	8"	0.0303
18"	8"	0.0436
24"	8"	0.0776
30"	8"	0.1212
36"	8"	0.1745
42"	8"	0.2376
48"	8"	0.3103
54"	12"	0.5890
60"	12"	0.7272
66"	12"	0.8799
72"	12"	1.0472

DEPARTMENT OF TRANSPORTATION
STATE OF GEORGIA

STANDARD
GRAVITY WALL TYPICAL SECTIONS, RAISING HEADWALL, AND TYPICAL PIPE PLUG

NO SCALE:

REV. & REDR. SEPT, 2016

DATE | REVISION | BY

REV. & C.E.W.
REDR.
CHK. D.D.F.

(SUBMITTED) STATE ROAD & AIRPORT DESIGN ENGR.

(APPROVED) Margaret B Pickle STATE HIGHWAY ENGINEER

NUMBER 9031L

SHEET 1 OF 2

STATE	PROJECT NUMBER	SHEET NO.	TOTAL SHEETS
GA.			

DETAIL OF CATCH BASIN MODIFIED FOR DOUBLE GRATES

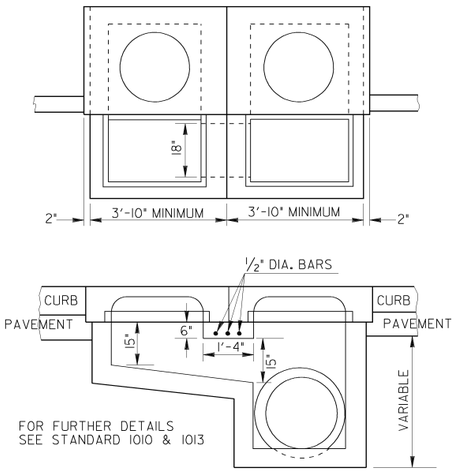

DETAIL OF DROP INLET MODIFIED FOR DOUBLE GRATES

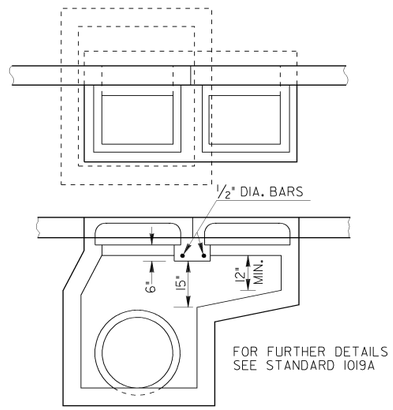

DETAIL OF CONCRETE SPRING BOX

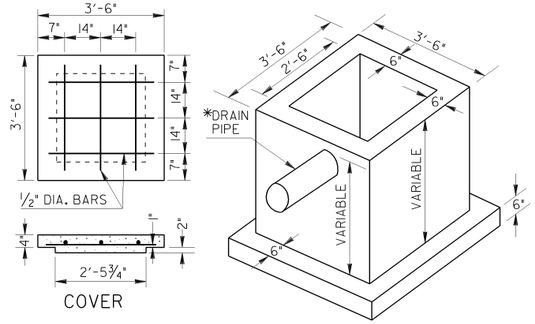

NOTE: SPRING BOX TO BE CONSTRUCTED OF CLASS "A" CONCRETE.

*DRAIN PIPE SHALL BE 6" PERFORATED UNDERDRAIN PIPE, EXCEPT WHERE OTHERWISE SPECIFIED. (2" GALV. PIPE USED ONLY IN SPECIAL CASES.) PAYMENT FOR SPRING BOX INCLUDES 1'-6" MIN. LENGTH OF DRAIN PIPE. ANY ADDITIONAL PIPE REQUIRED SHALL BE PAID FOR SEPARATELY.

DETAIL OF CONCRETE STEPS

NOTE:
BASIS OF PAYMENT SHALL BE CLASS "B" CONC. INCL. REINF. STEEL UNLESS OTHERWISE SPECIFIED.

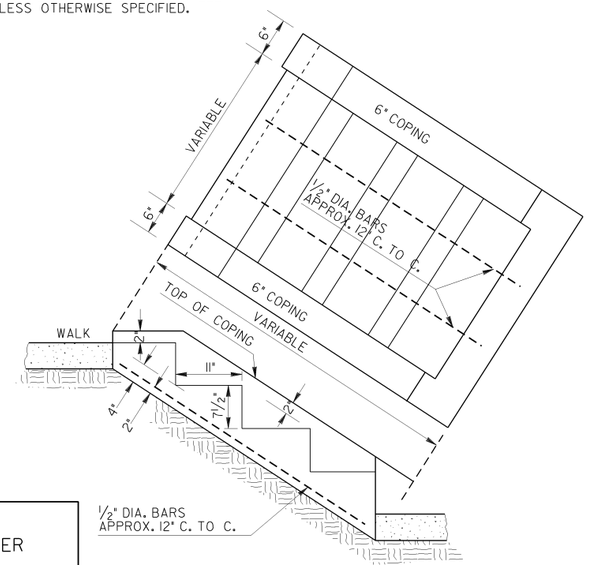

NOTE: RISE AND TREAD ARE TO BE ADJUSTED TO FIT SLOPE. RISE NOT TO EXCEED 8".

DETAILS OF CATCH BASIN OR DROP INLET CONNECTION TO CONCRETE BOX CULVERT

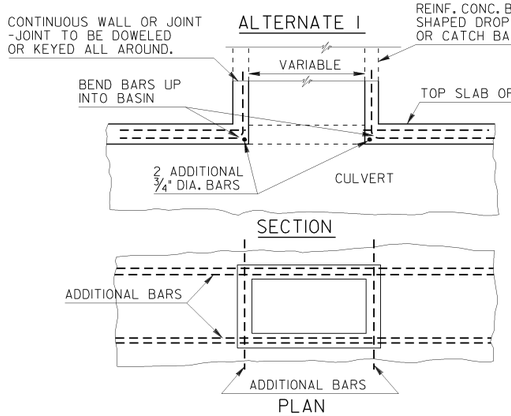

NOTE: PAYMENT FOR CATCH BASIN OR DROP INLET INCLUDES CONNECTION TO BOX CULVERT (ANY ALTERNATE).

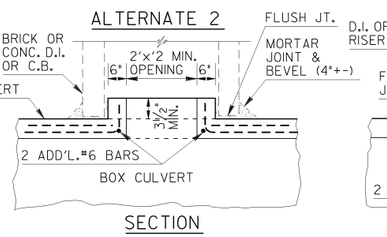

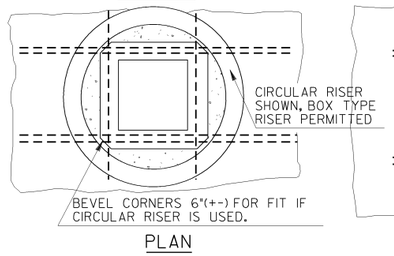

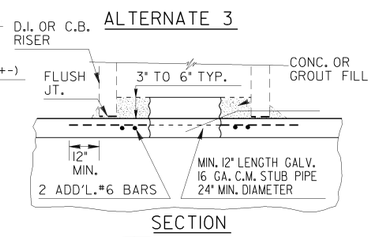

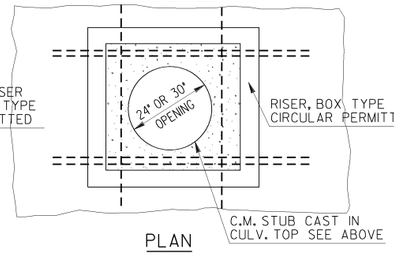

DETAILS FOR CAPPING EXISTING DROP INLET WITH CONCRETE COVER

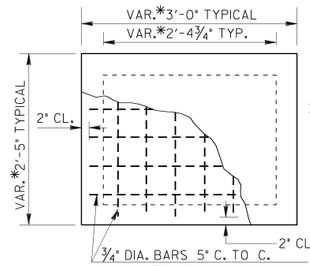

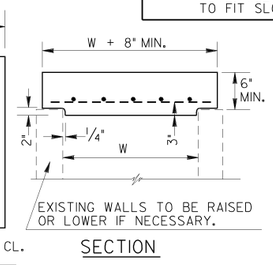

NOTE:
CONCRETE COVER SHOWN IS FOR USE IN CAPPING MINOR STRUCTURE WHERE CONVERSION FROM DROP INLET TO JUNCTION BOX IS DESIRED, SEE STD. 1011A REINFORCED CONCRETE COVER FOR CONVERSION TO MANHOLE.

* DIMENSIONS INDICATED ABOVE ARE TYPICAL FOR APPLICATION WITH STD. 1019A DROP INLET AND WILL VARY ACCORDING TO STRUCTURE; HOWEVER, NO INSIDE DIMENSION SHOULD EXCEED 4'-0" WITHOUT STRUCTURAL REVIEW. INLET DIMENSIONS SHOULD BE DETERMINED PRIOR TO CASTING CONC. COVER.

NOTE: IF STRUCTURE IS TO BE UNDER TRAFFIC AND DOES NOT HAVE ONE FT. MIN. CLEARANCE TO SUBBASE, THE SLAB THICKNESS SHALL BE INCREASED BY 4" AND THE REBARS SIZE INCREASES FROM ¾" DIA. TO 1" DIA.

DATE	REVISION	BY
6-30-98	REDRAWN	G.J.P.
4-30-84	RET. WALL "H" TABLE ADDED	R.M.U.
2-15-83	ADD PIPE PLUG DETAILS	R.M.U.

DEPARTMENT OF TRANSPORTATION
STATE OF GEORGIA

STANDARD

DETAILS OF: CATCH BASIN MODIFIED FOR DOUBLE GRATE, DROP INLET MODIFIED FOR DOUBLE GRATE, CONCRETE SPRING BOX, CONCRETE STEPS, CATCH BASIN OR DROP INLET CONNECTION TO CONCRETE BOX CULVERT CAPPING EXISTING DROP INLET

NO SCALE: REV. & REDR. DECEMBER, 1982

REV. & REDR. R.M.U. (SUBMITTED)
TRA. G.M.E. STATE ROAD & AIRPORT DESIGN ENGR.
CHK. R.K.C. (APPROVED) CHIEF ENGINEER

NUMBER 9031L

SHEET 2 OF 2

GDOT Georgia Department of Transportation | P. I. No. XXXXXXX

DETAILS OF CHAIN-LINK WIRE FENCE

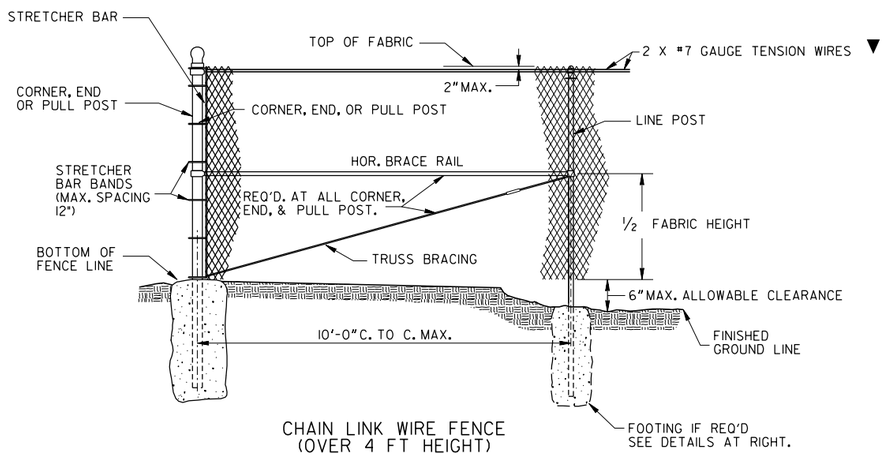

CHAIN LINK WIRE FENCE
(OVER 4 FT HEIGHT)

CONCRETE FOOTINGS ARE REQUIRED AT ALL CORNERS, END AND PULL POST.

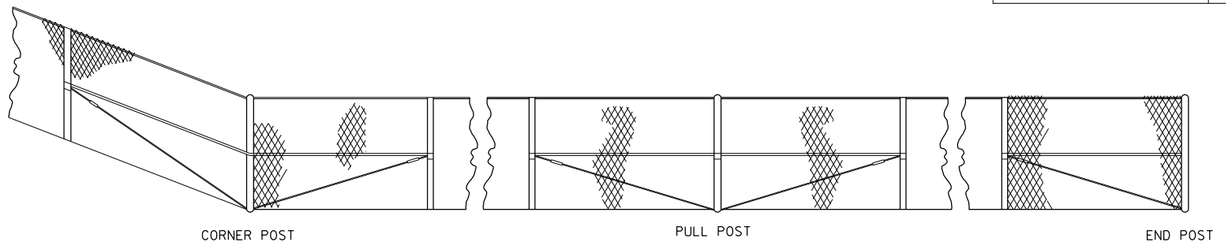

METHOD OF BRACING END, CORNER, AND PULL POST

NOTES:

FABRIC SHALL BE FASTENED TO LINE POST AT INTERVALS NOT GREATER THAN 14".

TENSION WIRES SHALL BE TIED TO FABRIC WITH 9 GA. WIRE OR 11GA. HOG RINGS AT 24" C. TO C. MAX. SPACINGS.

▼ WHERE A PROPERTY OWNER'S CHAIN LINK WIRE FENCE HAS TO BE REPLACED BY THE DEPARTMENT AS PART OF THE CONSTRUCTION PROJECT, AND THE EXISTING FENCE HAD A TOP RAIL, THEN THE NEW REPLACEMENT FENCE SHALL ALSO HAVE A SIMILAR TYPE RAIL INSTEAD OF TENSION WIRES AT THE TOP OF THE FENCE.

HORIZONTAL BRACE RAILS AND TRUSS BRACING SHALL BE REQUIRED AT ALL CORNERS, END, AND PULL POSTS, EXCEPT WHERE A CONTINUOUS TOP RAIL IS SPECIFIED (SEE NOTE ABOVE) WITH A FENCE 4FT. OR LESS IN HEIGHT.

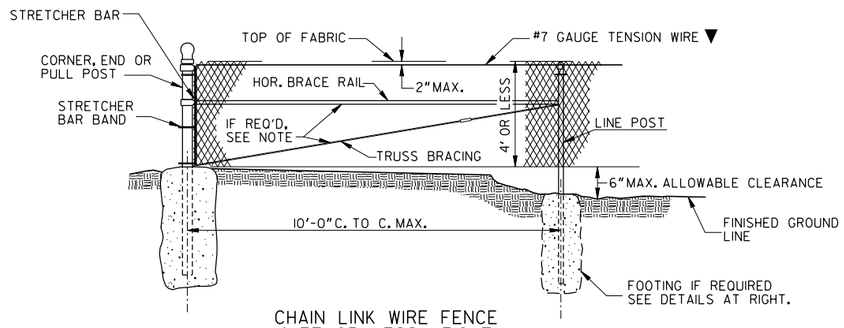

CHAIN LINK WIRE FENCE
(4 FT. OR LESS HEIGHT)

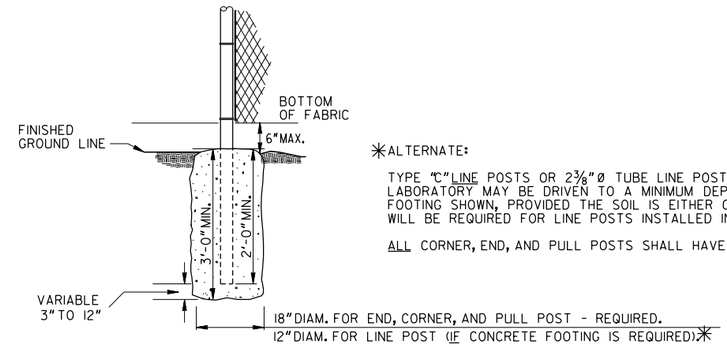

✳ALTERNATE:

TYPE "C" LINE POSTS OR 2 3/8"Ø TUBE LINE POSTS OR OTHER TYPE LINE POSTS APPROVED BY THE D.O.T. LABORATORY MAY BE DRIVEN TO A MINIMUM DEPTH OF THREE (3) FEET INSTEAD OF THE CONCRETE FOOTING SHOWN, PROVIDED THE SOIL IS EITHER CLASS I, II, III, OR V SOIL. CONCRETE FOOTINGS WILL BE REQUIRED FOR LINE POSTS INSTALLED IN MARSHY OR SWAMPY AREAS (CLASS IV SOILS).

ALL CORNER, END, AND PULL POSTS SHALL HAVE CONCRETE FOOTINGS AS SHOWN.

FOOTING DETAIL FOR FENCE POSTS

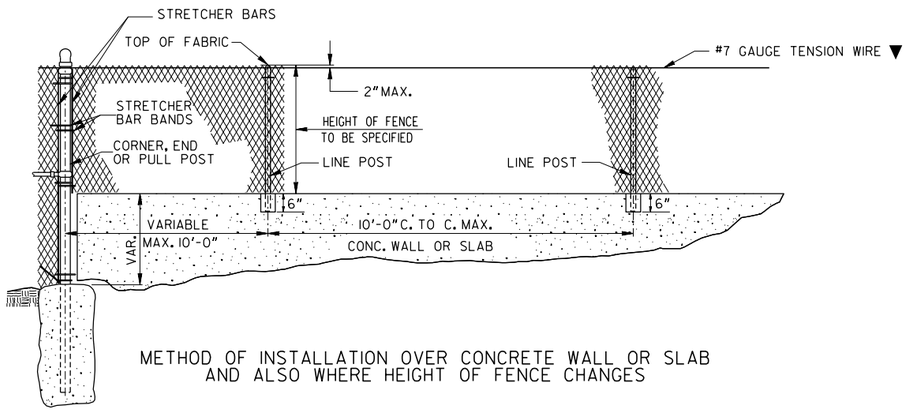

METHOD OF INSTALLATION OVER CONCRETE WALL OR SLAB AND ALSO WHERE HEIGHT OF FENCE CHANGES

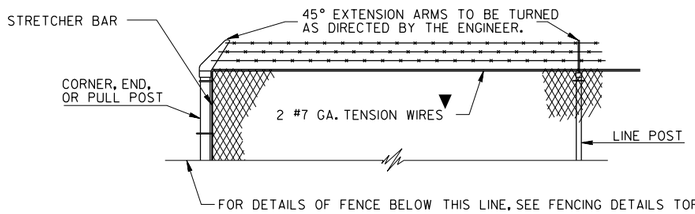

DETAILS OF BARBED WIRE WITH EXTENSION ARMS FOR CHAIN LINK WIRE FENCE

DEPARTMENT OF TRANSPORTATION
STATE OF GEORGIA

STANDARD

CHAIN LINK WIRE FENCE

REV. & ADDED NOTES	DATE
REVISION	8-13-85
BY	
R.M.U.	

NOT TO SCALE — REDRAWN, JULY 2024 — JUNE 1981

DES. 4-62 REV. R.M.U. RETR. G.M.E. CHK. R.K.C.

(SUBMITTED) Hoyt E. Hardy
STATE ROAD & AIRPORT DESIGN ENGR.

(APPROVED) Thomas D. Moorhead
STATE HIGHWAY ENGINEER.

NUMBER 903IN

GDOT Georgia Department of Transportation | P. I. No. XXXXXXX

DETAIL FOR PLACING ROOF DRAIN PIPE UNDER SIDEWALK

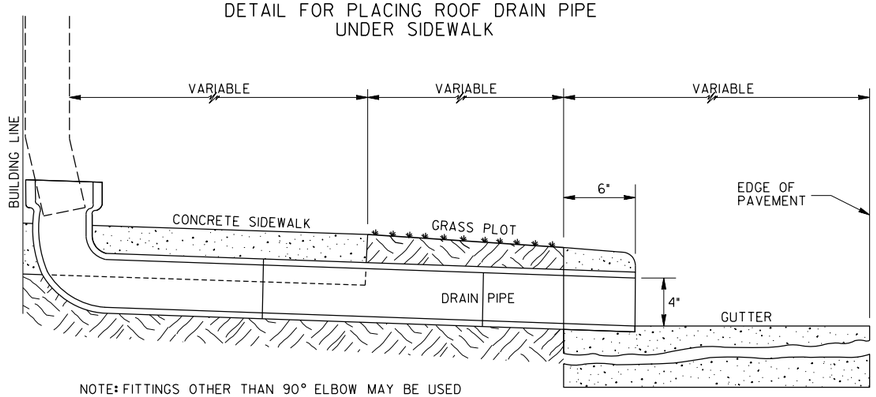

NOTE: FITTINGS OTHER THAN 90° ELBOW MAY BE USED TO SATISFY OTHER CONDITIONS.

DETAIL OF RAMP TYPE BARRICADE

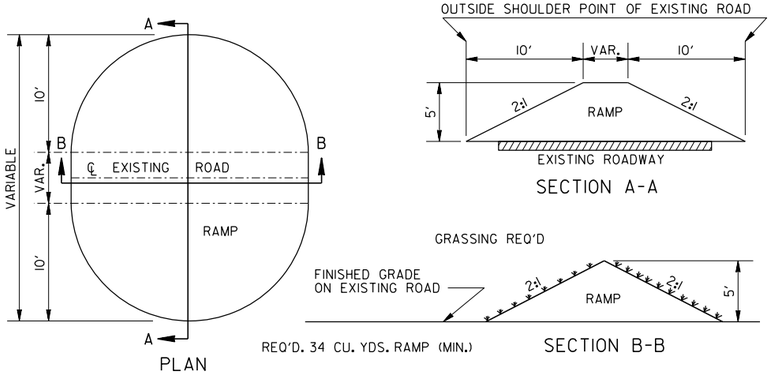

NOTE: MATERIALS AND CONSTRUCTION TO BE IN ACCORDANCE WITH STANDARD SPECIFICATIONS.

DETAIL OF PIPE HANDRAIL FOR RETAINING WALL

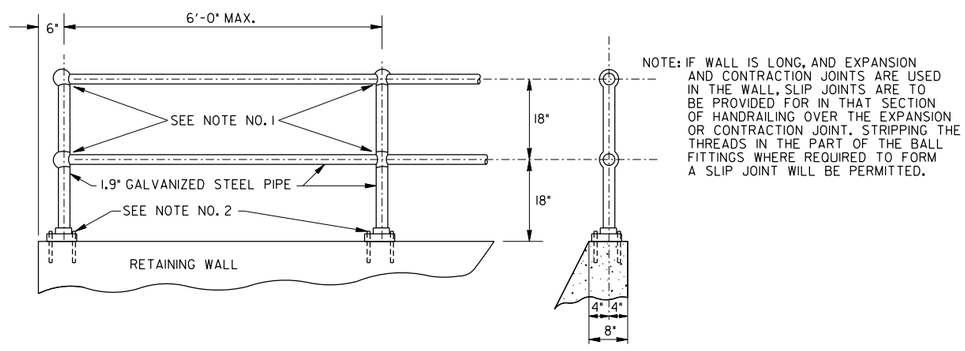

NOTE: IF WALL IS LONG, AND EXPANSION AND CONTRACTION JOINTS ARE USED IN THE WALL, SLIP JOINTS ARE TO BE PROVIDED FOR IN THAT SECTION OF HANDRAILING OVER THE EXPANSION OR CONTRACTION JOINT. STRIPPING THE THREADS IN THE PART OF THE BALL FITTINGS WHERE REQUIRED TO FORM A SLIP JOINT WILL BE PERMITTED.

NOTE: PIPE, PIPE FITTINGS, FLOOR FLANGES AND BOLTS SHALL BE OF AN APPROVED STANDARD TYPE.

NOTES FOR PIPE HANDRAILING

1. JOINTS-
   - A.) STANDARD OR SPECIAL GALVANIZED STEEL OR GALVANIZED IRON FITTINGS MAY BE USED AT JOINTS (AS SHOWN).

     -OR-

   - B.) JOINTS MAY BE WELDED. IF WELDED, ALL EXPOSED JOINTS SHALL BE FINISHED BY GRINDING OR FILLING TO GIVE A NEAT APPEARANCE. ALL DAMAGE TO GALVANIZING SHALL BE REPAIRED IN ACCORDANCE WITH THE GA. STANDARD SPECIFICATIONS.

2. FOOTINGS-
   - A.) POST MAY BE ANCHORED WITH $2\frac{1}{2}$" X $6\frac{1}{2}$" GALVANIZED FLOOR FLANGES WITH 4-$\frac{1}{2}$" X 9" GALVANIZED BOLTS (AS SHOWN).

     -OR-

   - B.) POST MAY BE GROUTED IN 6" DEEP, 3" DIA. HOLE. TOTAL LENGTH OF POST WILL BE 6" GREATER THAN THAT IN DETAILS TO GIVE SAME USEABLE HEIGHT AS IF FLOOR FLANGES WERE USED.

3. 1.9" (GALV. STEEL PIPE) DENOTES O.D. FOR RAIL SECTIONS. I.D.= $1\frac{1}{2}$".

DETAIL OF PIPE HANDRAIL FOR CONCRETE STEPS

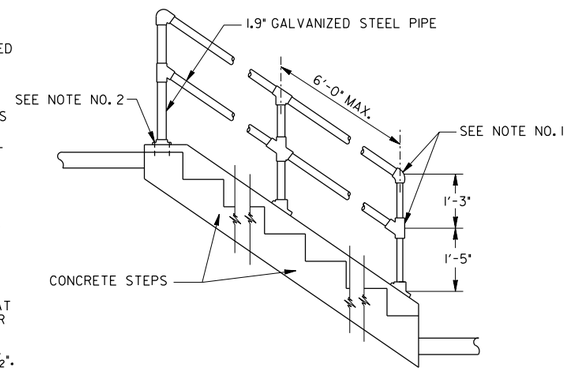

NOTE: PIPE, FITTINGS, FLANGES AND BOLTS SHALL BE OF AN APPROVED STANDARD TYPE.

BY	DATE	REVISION
R.M.U.	10-11-88	Designated 1.9" O.D. Handrail
R.M.U.	2-10-78	Ramp detail-Rem. Sprig.
R.M.U.	2-11-76	Rev. Handrailing
R.M.U.		Add. Conc. Patch. Detail&
	11-25-75	Handrail for Conc. Steps

DEPARTMENT OF TRANSPORTATION
STATE OF GEORGIA

STANDARD

CONSTRUCTION DETAILS OF
ROOF DRAIN PIPE UNDER SIDEWALK,
RAMP TYPE BARRICADE,
PIPE HANDRAIL FOR RETAINING WALL, AND
PIPE HANDRAIL FOR CONCRETE STEPS

NOT TO SCALE | REDRAWN JULY, 2024 | FEB 1966

DESIGNED: ____
DRAWN: A.V.S.
TRACED: A.V.S.
CHECKED: R.B.S.

(SUBMITTED) STATE ROAD DESIGN ENGINEER
(APPROVED) STATE HIGHWAY ENGINEER

NUMBER 903IR

GDOT Georgia Department of Transportation | P. I. No. XXXXXXX

DETAILS OF DROP INLET WITH DOUBLE WEIR OPENING

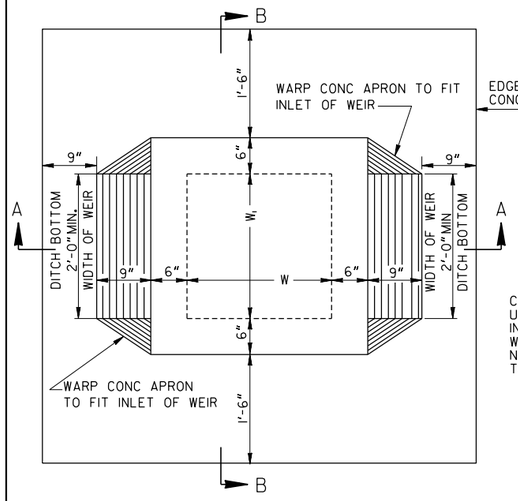

ISOMETRIC VIEW (SINGLE WEIR OPENING)

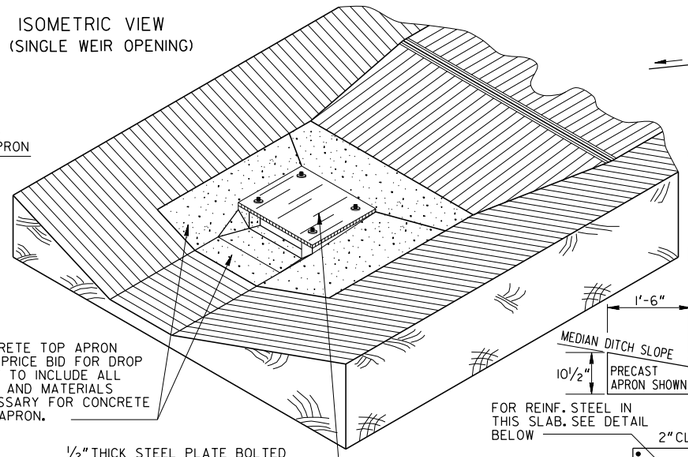

CONCRETE TOP APRON UNIT PRICE BID FOR DROP INLET TO INCLUDE ALL WORK AND MATERIALS NECESSARY FOR CONCRETE TOP APRON.

½" THICK STEEL PLATE BOLTED AT EACH CORNER WITH ½"X 6" ⊛ BOLT, NUT AND WASHER. BOLT, NUT AND WASHER GALVANIZED ACCORDING TO A.S.T.M. A-153.

DETAIL OF SINGLE WEIR OPENING

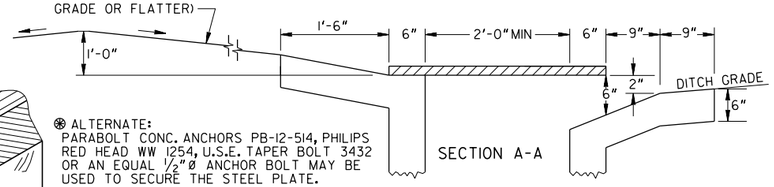

⊛ ALTERNATE: PARABOLT CONC. ANCHORS PB-12-514, PHILIPS RED HEAD WW 1254, U.S.E. TAPER BOLT 3432 OR AN EQUAL ½"Ø ANCHOR BOLT MAY BE USED TO SECURE THE STEEL PLATE.

DROP INLET WITH ENLARGED BASE

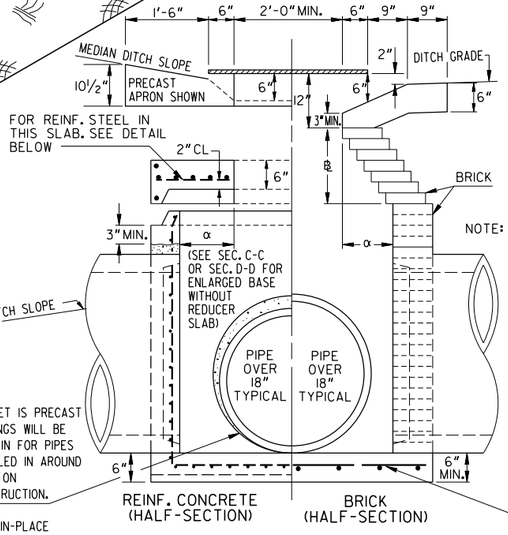

REINF. CONCRETE (HALF-SECTION) BRICK (HALF-SECTION)

DROP INLET WITH ADDITIONAL HEIGHT

(DETAILS SHOWN ARE TYPICAL BOX ENCLOSURE FOR PIPE MAY BE BRICK MASONRY WITH PRECAST RISERS, ALSO SEE STD. 1040 FOR ADAPTERS USED WITH CIRCULAR ALTERNATES).

NOTE: DETAILS NOT SHOWN FOR INLETS WITH ENLARGED BASES AND/OR ADDITIONAL HEIGHT WILL BE AS SHOWN ELSEWHERE.

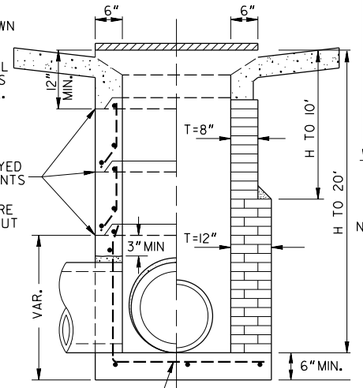

REINF. CONC. (HALF-SECTION) BRICK (HALF-SECTION)

NOTE: HALF-SECTIONS ARE SYMMETRICAL ABOUT ℄ OF THE TYPE CONSTRUCTION UTILIZED.

BOTTOM SLAB REINF. #4 BARS @ 12"O.C. BOTH WAYS FOR STRUCTURES SHOWN HERE.

BRICK WALL THICKNESS	
H	T
UP TO 10'	8"
10' TO 20'	12"
20' TO 30'	16"

REINFORCING FOR OPTIONAL PRECAST APRON

(MAY BE USED WITH A PRECAST OR BUILT-IN-PLACE INLET)

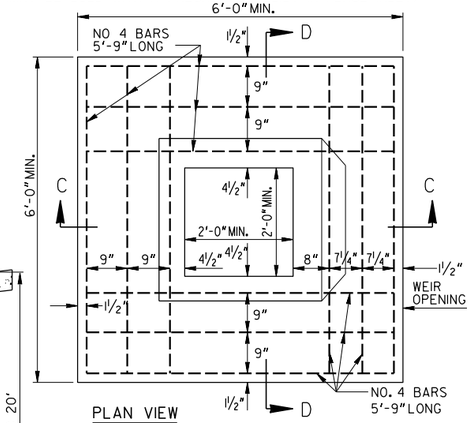

PLAN VIEW

NOTE: 2/2, 6X6 WELDED WIRE FABRIC WITH 2 NO. 4 BARS 5'-9" LONG ON EACH SIDE MAY BE USED AS AN ALTERNATIVE.

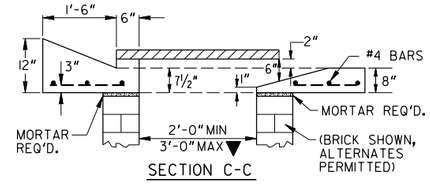

SECTION C-C

NOTE: WHEN USING PRECAST APRON, THE PLATE, BOLTS & OTHER REQUIREMENTS SHALL CONFORM TO THAT SHOWN FOR THE POURED IN PLACE APRON.

▼ MAXIMUM W OR WI PERMITTED WITH PRECAST APRON WITHOUT REDUCER SLAB.

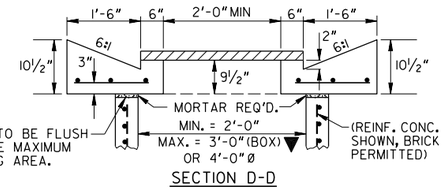

SECTION D-D

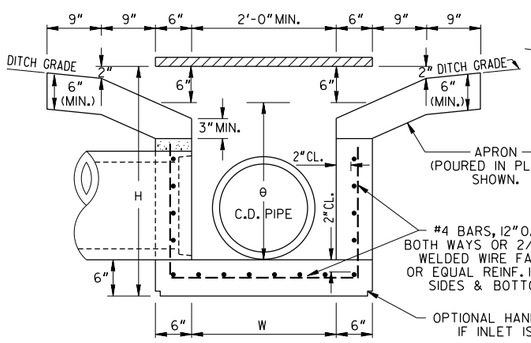

SECTION A-A (CONC. BOX)

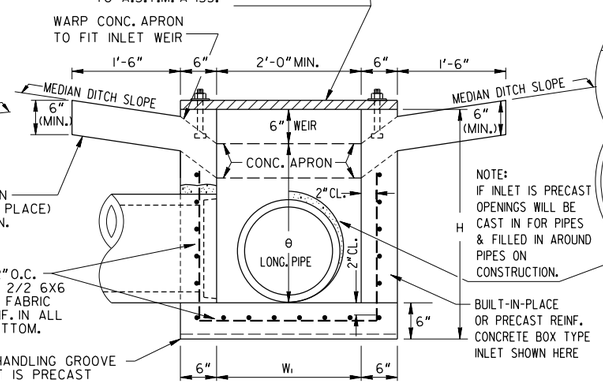

SECTION B-B (CONC. BOX)

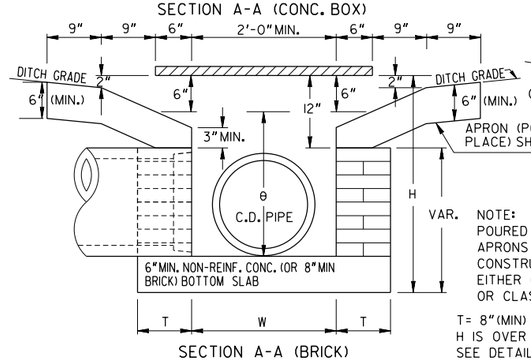

SECTION A-A (BRICK)

NOTE: POURED IN PLACE APRONS MAY BE CONSTRUCTED WITH EITHER CLASS "A" OR CLASS "B" CONC.

T= 8"(MIN) EXCEPT WHERE H IS OVER 10 FT. SEE DETAIL AT RIGHT

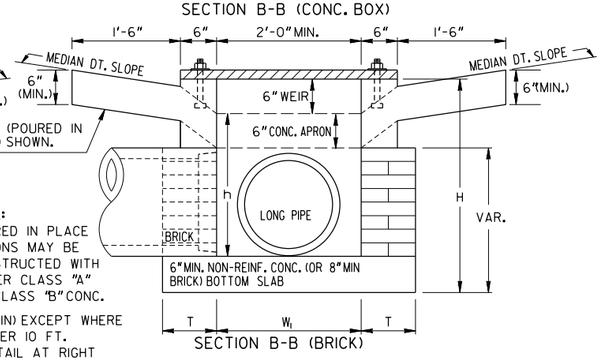

SECTION B-B (BRICK)

DETAIL AND ARRANGEMENT OF LADDER BARS

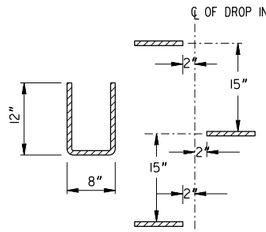

LADDER BARS ARE REQUIRED IN ALL INLETS, WHERE θ=OVER 4'-0". NUMBER AND LOCATION OF LADDER BARS TO BE AS DIRECTED BY THE ENGINEER. AN ALTERNATE STEP MAY BE SUBSTITUTED, IF APPROVED BY THE LABORATORY.

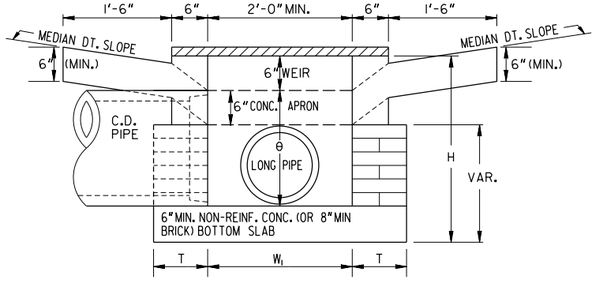

SECTION B-B MODIFIED

(C.D. PIPE IS 6"MIN. LARGER THAN LONGITUDINAL PIPE)

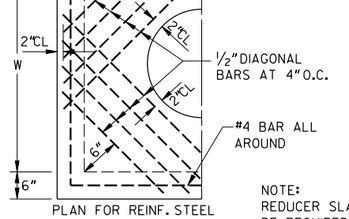

PLAN FOR REINF. STEEL

REDUCER SLAB (HALF-SECTION)

NOTE: REDUCER SLAB SHALL BE REQUIRED FOR SKEWED ALIGNMENT IF APRON IS POURED IN PLACE OR IF W OR WI IS OVER 3'-0".

TYPICAL PLAN FOR SKEWED PIPE

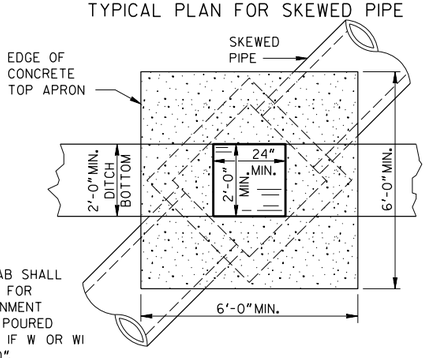

✻✻ TYPICAL DROP INLET DIMENSIONS

PIPE SIZE	BRICK MASONRY MIN.W OR W1	MIN. H	MIN. θ	a (MAX.)	b (MIN.)	MODIFIED MIN. H	MODIFIED MIN. θ	REINF. CONCRETE ✻ MIN.W OR W1	MIN. H	MIN. θ	a (MAX.)
15"	2'-0"	3'-1"	2'-1"	——	——	2'-7½"	1'-7½"	2'-0"	3'-2"	2'-2"	——
18"	2'-3"	3'-10"	2'-10"	1½"	2 3/16"	2'-11"	1'-11"	2'-3"	3'-5"	2'-5"	——
24"	2'-10"	4'-11"	3'-11"	5"	8 5/8"	3'-6"	2'-6"	3'-0"	4'-10"	3'-10"	6"
30"	3'-5"	6'-0"	5'-0"	8½"	1'-2 11/16"	4'-1"	3'-1"	3'-6"	5'-5"	4'-5"	9"
36"	4'-0"	7'-1"	6'-1"	1'-0"	1'-8¾"	——	——	4'-0"	6'-0"	5'-0"	1'-0"
42"	4'-7"	8'-6"	7'-2"	1'-3½"	2'-2¾"	——	——	4'-6"	6'-7"	5'-7"	1'-3"
48"	5'-2"	9'-7"	8'-3"	1'-7"	2'-8 5/8"	——	——	5'-0"	7'-2"	6'-2"	1'-6"

✻ BUILT-IN-PLACE OR PRECAST BOX

✻✻ DIMENSIONS ARE BASED UPON TYPICAL OUTSIDE DIAMETERS OF CONCRETE PIPE AND MAY BE VARIED IF CONDITIONS PERMIT, AND THE VARIED DIMENSIONS ARE SHOWN IN THE PLANS OR SPECIFIED BY THE ENGINEER. DIMENSIONS "a" ARE BASED UPON 2'-0" WEIR OPENING. MINIMUM H AND θ ARE BASED UPON LARGEST PIPE INVOLVED. BOX ENCLOSURE FOR PIPE DOES NOT HAVE TO BE SQUARE. W AND WI DIMENSIONS MAY DIFFER. (DIMENSIONS HAVE BEEN SPECIFIED FOR BOX SHAPED INLETS. SEE STD. 1040 FOR DIMENSIONS OF CIRCULAR ALTERNATES).

GENERAL NOTES:

1. SPECIFICATIONS: GA. STANDARD, CURRENT EDITION, & SUPPLEMENTS THERETO.
2. SEE STD. 9031-L FOR ADDITIONAL DETAILS WHERE INLET IS CONSTRUCTED ON BOX CULVERT.
3. SEE STD. 1040 FOR CIRCULAR PRECAST ALTERNATES.
4. PRECAST ON BRICK MASONRY: BRICK CONSTRUCTION SHALL EXTEND 6"± ABOVE TOP OF PIPE. JOINTS BETWEEN PRECAST & BRICK SECTIONS SHALL BE FLUSH OR CONC. FILLED TO GIVE MAX. BEARING AREA.
5. TYPICAL TREATMENT FOR SKEWED PIPES:
   (A) WITH PRECAST APRON - CONSTRUCT BOX WITH WALLS PERPENDICULAR TO PIPE AND SET PRECAST APRON PARALLEL TO DITCH AND SKEWED RELATIVE TO PIPE OR USE CIRCULAR SECTIONS (STD. 1040)
   (B) WITH BUILT-IN-PLACE APRON - CONSTRUCT BOX AS DESCRIBED IN (A) AND USE REDUCER SLAB OR INCREASE W OR W1 DIMENSIONS AS NECESSARY OR USE CIRCULAR SECTIONS (STD. 1040).

DEPARTMENT OF TRANSPORTATION
STATE OF GEORGIA

STANDARD MEDIAN DROP INLET
(PRECAST OR BUILT-IN-PLACE) & CONCRETE APRON

NOT TO SCALE — REDRAWN JULY 2024 — AUGUST 26, 1981

GEN. REV. BY: R.M.U. — REVISION — DATE: 4-17-96

DES. 2-67 (SUBMITTED) Floyd E. Hardy — STATE ROAD & AIRPORT DESIGN ENGR.
REV. R.M.U.
TRA. G.M.E.
CHK. R.K.C.
(APPROVED) Thomas D. Moreland — STATE HIGHWAY ENGINEER

NUMBER 9031S

GDOT Georgia Department of Transportation | P. I. No. XXXXXXX

FLARE DETAILS AT BRIDGE ENDS

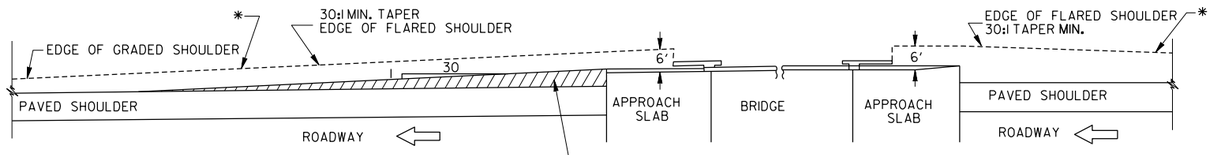

(ROADWAY WITH PAVED SHOULDERS)

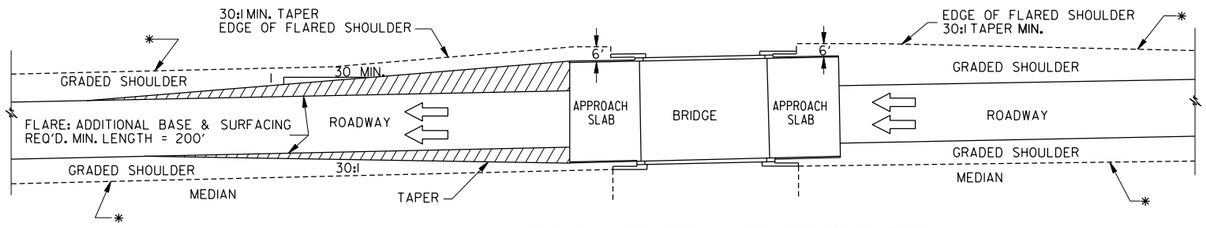

(ONE-WAY TRAFFIC - GRADED SHOULDERS)

GENERAL NOTE (FLARES)
EARTHWORK QUANTITIES SHALL REFLECT ADDITIONAL MATERIAL REQUIRED FOR CONSTRUCTION OF FLARED SHOULDERS.

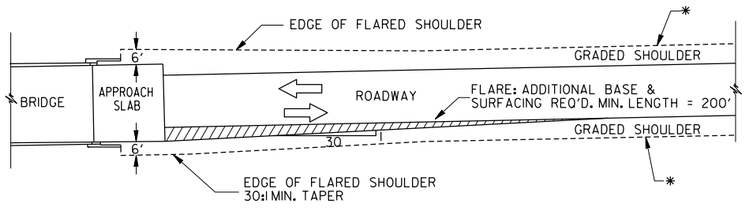

(TWO-WAY TRAFFIC - GRADED SHOULDERS)

* WHERE THE WIDENED ROADWAY SHOULDER FOR GUARDRAIL GIVES THE SAME OFFSET AS AT THE APPROACH SLAB, THIS LINE REMAINS STRAIGHT TO THE BRIDGE END. (ALSO, SEE GUARDRAIL STANDARDS OR DETAILS FOR ADDITIONAL FLARE AT ANCHORAGES).

ISOMETRIC VIEW OF SIDE ROAD OR DRIVE

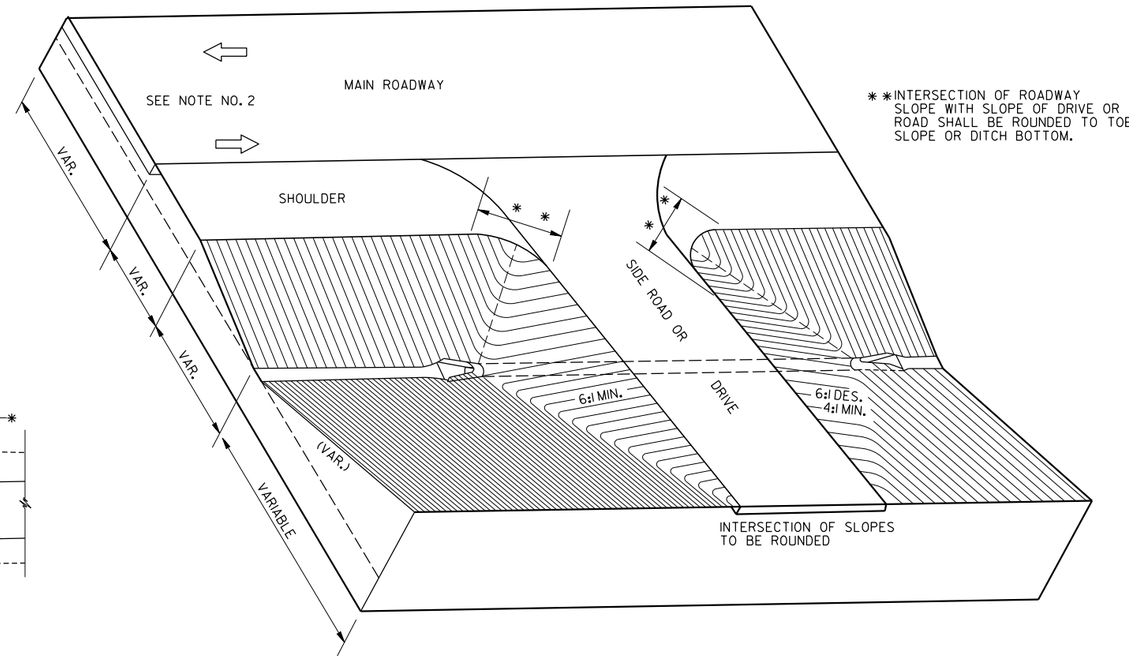

** INTERSECTION OF ROADWAY SLOPE WITH SLOPE OF DRIVE OR SIDE ROAD SHALL BE ROUNDED TO TOE OF SLOPE OR DITCH BOTTOM.

NOTES:

1. ENDS OF SIDE DRAINS WHICH FALL INSIDE THE CLEAR ZONE WIDTH SHALL REQUIRE SAFETY END SECTIONS FOR SIDE DRAIN PIPE.
2. SIDE SLOPES ON THE APPROACH SIDE OF TRAFFIC SHALL NOT BE STEEPER THAN 6:1.
3. SIDE DRAIN END SECTIONS SHOULD FIT THE SIDE SLOPE TERRAIN AND SHOULD NOT PROTRUDE.
4. SIDE SLOPES FROM SIDE ROAD OR DRIVE ALSO APPLY TO FILL SECTIONS.

BY	REVISION	DATE
R.M.U.	GEN. REVISION	8-18-95
R.M.U.	ADD NOTE NO. 2	9-14-93
R.M.U.	ADD END SEC. GEN. REV.	5-22-89
C.R.O.	ADD FLARE DET. PAVED SH.	10-7-68

DEPARTMENT OF TRANSPORTATION
STATE OF GEORGIA

STANDARD

ISOMETRIC VIEW OF SIDE ROAD OR DRIVE
FLARE DETAILS AT BRIDGE ENDS

NOT TO SCALE | REDRAWN JULY 2024 | AUG. 1958

DESIGNED: RBS
DRAWN: AVS
TRACED: AVS
CHECKED: RBS

(SUBMITTED) Floyd E. Hardy
STATE ROAD & AIRPORT DESIGN ENGR.
(APPROVED) Thomas D. Moreland Jr.
STATE HIGHWAY ENGINEER

NUMBER 9031T

GDOT Georgia Department of Transportation | P. I. No. XXXXXXX

PIPE CURVED ALIGNMENT USING SECTIONS WITH DROPPED JOINTS

NOTE TO DESIGNER:
A COST COMPARISON ESTIMATE SHALL BE MADE BEFORE PIPE CURVED ALIGNMENT IS SPECIFIED.

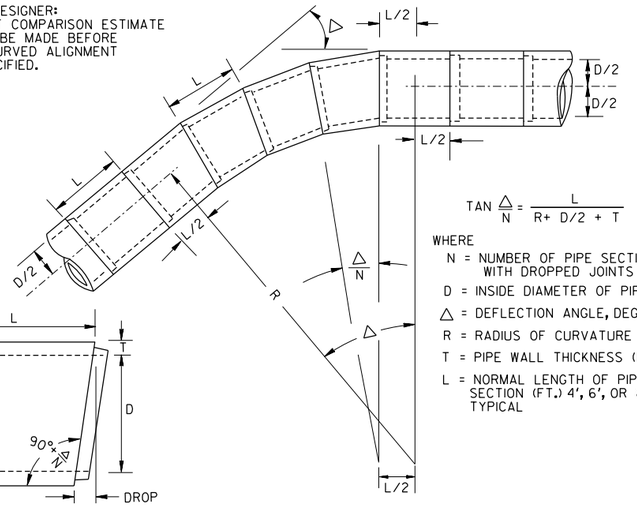

SECTION WITH DROPPED JOINT

$$\text{TAN}\ \frac{\triangle}{N} = \frac{L}{R + D/2 + T}$$

WHERE
- N = NUMBER OF PIPE SECTIONS WITH DROPPED JOINTS
- D = INSIDE DIAMETER OF PIPE
- △ = DEFLECTION ANGLE, DEGREES
- R = RADIUS OF CURVATURE (FT.)
- T = PIPE WALL THICKNESS (FT.)
- L = NORMAL LENGTH OF PIPE SECTION (FT.) 4', 6', OR 8' TYPICAL

NOTES FOR PIPE CURVED ALIGNMENT:

1. PLANS ARE TO SPECIFY ONLY THE PIPE DIAMETER "D", THE ANGLE "△", AND THE TANGENT ALIGNMENT.
2. PIPE WALL THICKNESS "T", PIPE SECTION LENGTHS "L", AND DROP IN PIPE JOINT "△/N" VARIES ACCORDING TO PIPE PRODUCER AND IS BASED ON FEASIBILITY.
3. THE RADIUS "R" AND THE NUMBER OF DROPPED JOINT PIPE SECTIONS "N" IS DETERMINED BY (1) & (2) ABOVE. MINOR MODIFICATIONS IN THE RADIUS "R" ARE NORMALLY MADE SO THAT "N" WILL BE A WHOLE NUMBER.
4. PIPE SECTIONS SHALL BE ORIENTED SUCH THAT THE PLANE OF THE DROPPED JOINT IS AT RIGHT ANGLES TO THE THEORETICAL CIRCULAR CURVE. THE TOP OF SECTIONS ARE TO BE MARKED SO THAT THE DEFLECTION ANGLE IS PROPERLY ORIENTED.
5. DETAILS ARE SHOWN FOR CONCRETE PIPE. CURVED ALIGNMENT FOR C.M. PIPE SHALL BE AS RECOMMENDED BY THE MANUFACTURER AND APPROVED BY THE ENGINEER.
6. PAYMENT PER LIN. FT. PIPE INCLUDES PIPE SECTIONS WITH DROPPED JOINTS.

REINFORCED CONCRETE TOP

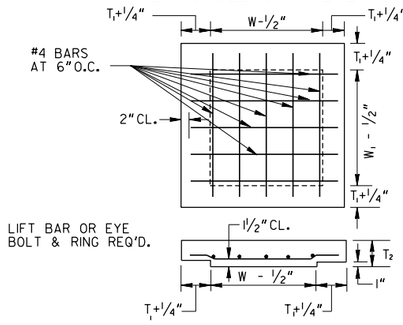

$T_2 = 5\frac{1}{2}$" FOR W OR W1 TO 3'-0"
$T_2 = 8$" FOR W OR W1 TO 3'-0"

SEE GEN. NOTE NO.3

DIMENSIONS FOR BRICK OR REINF. CONC. BOX			
PIPE SIZE	MIN. W OR W_1	MIN. θ	MIN. H
15"	2' - 0"	1' - 9"	2' - 9"
18"	2' - 3"	2' - 1"	3' - 1"
24"	2' - 10"	2' - 8"	3' - 8"
30"	3' - 5"	3' - 3"	4' - 3"
36"	4' - 0"	3' - 10"	4' - 9"
42"	4' - 7"	4' - 5"	5' - 5"
48"	5' - 2"	5' - 0"	6' - 0"

DETAILS OF CONCRETE JUNCTION BOX
(PRECAST OR BUILT IN PLACE)

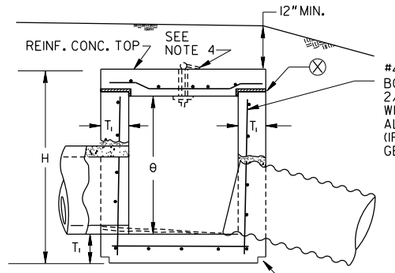

SECTIONAL VIEW

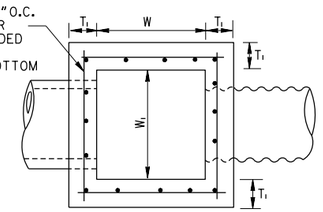

PLAN VIEW
(SHOWN WITHOUT REQ'D. TOP)

T=6"FOR CONCRETE

DETAILS OF BRICK JUNCTION BOX

FOR BRICK T=8"(MAX. IOFT.DEPTH)

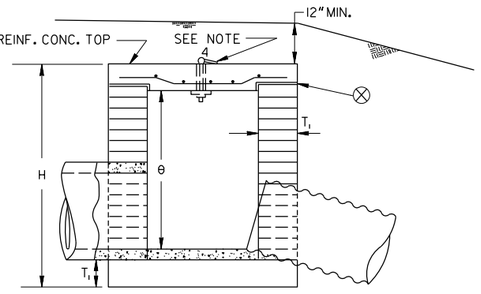

SECTIONAL VIEW

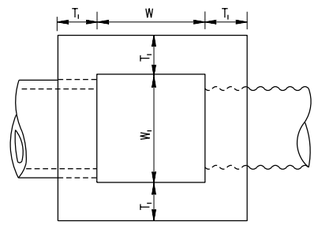

PLAN VIEW
(SHOWN WITHOUT REQ'D. TOP)

⊗ PREVENT BOND WITH EITHER 30 LB. ASPHALT SATURATED FELT OR PREFORMED FOAM JOINT FILLER.

PIPE ELBOW SECTION (PRE-FABRICATED)

PLAN VIEW

SPLICE DETAIL
(TYPICAL)

NOTE: SPLICE DETAIL IS SHOWN FOR DOUBLE CAGE REINFORCING, & IS SIMILAR FOR SINGLE GAGE REINFORCING, BUT WITH SINGLE SPLICE ALL AROUND BEING APPLICABLE

NOTES FOR PIPE ELBOW:

1. PAYMENT FOR LIN. FT. OF PIPE INCLUDES ELBOWS.
2. ELBOW ANGLE △ SHALL VARY ACCORDING TO NEED, BUT SHALL NOT BE GREATER THAN 45°. THE CONTRACTOR SHALL INFORM PRODUCER AS TO ANGLE REQUIRED.
3. (a) CONCRETE PIPE SHALL BE CUT BEFORE BEING CURED AND STEEL EXPOSED FROM EACH SIDE OF CUT.
   (b) EXPOSED STEEL SHALL BE REJOINED. FILLER RODS AT LEAST EQUAL TO RODS IN PIPE SHALL BE ADDED AS NEEDED FOR HANDLING STRENGTH & TO HOLD GROUT.
   (c) ALL VOID IN SPLICE SHALL BE PACKED WITH GROUT MORTAR RICH ENOUGH TO GIVE STRENGTH AT LEAST EQUAL TO REMOVED CONCRETE WITH INSIDE SMOOTHED OUT.
4. C.M. PIPE ELBOW NOT SHOWN, BUT MAY BE SPECIFIED. SOLID WELD SHALL BE REQUIRED FOR C.M. ELBOW JOINT WITH GALVANIZING AND/OR COATINGS REPAIRED AS REQ'D.

BOLT, RING & WASHER DETAILS

WASHER, BOLT & RING TO BE GALV. STEEL OR WROUGHT IRON RING TO BE PLACED IN EYE OF BOLT BEFORE LEAVING SHOP.

STEEL LIFTING BAR DETAIL

LIFT BAR SHALL BE ABLE TO MOVE UP & DOWN

NOTE: ALL EXPOSED STEEL COMPONENTS TO BE GALVANIZED

DETAILS OF CIRCULAR PRECAST JUNCTION BOX

(REINFORCING AND DESIGN SHALL COMPLY WITH A.S.T.M. C-478 EXECPT AS OTHERWISE SHOWN. MATERIALS SHALL COMPLY WITH GA. STD. SPECIFICATIONS FOR PRECAST MANHOLES).

I.D.	T_1 (MIN.)	T_2 (MIN.)	MAX. PIPE CONC.	MAX. PIPE C.M.	REBARS IN BOTTOM
4'-0"	5"	6"	30"	36"	#5
5'-0"	5"	8"	42"	48"	#5
6'-0"	6"	8"	48"	54"	#6

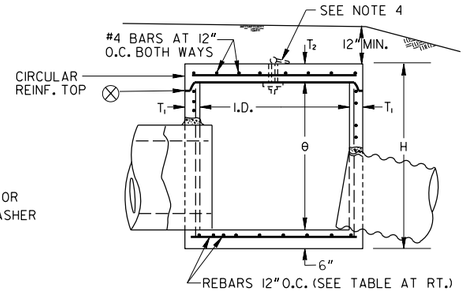

SECTIONAL VIEW

PIPE SIZE	MIN. θ	MIN. H
15"	1'-10"	2'-10"
18"	2'-2"	3'-2"
24"	2'-9"	3'-9"
30"	3'-4"	4'-4"
36"	4'-0"	5'-2"
42"	4'-7"	5'-9"
48"	5'-2"	6'-4"

NOTE:
OPENINGS SHALL BE PRECAST FOR BOTH INLET AND OUTLET

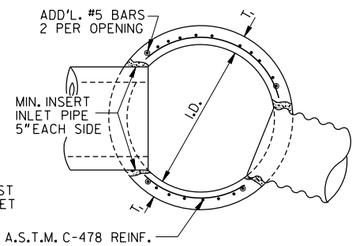

PLAN SECTION

CONCRETE COLLAR FOR DEFLECTING PIPE

PLAN SECTION

NOTES FOR CONCRETE COLLARS:

1. PERIMETERS OF CONCRETE COLLARS DO NOT HAVE TO BE SMOOTH LINES. COLLARS MAY BE FORMED AGAINST COMPACTED OR UNDISTURBED SOIL. DIMENSIONS ARE MINIMUM. COLLAR MAY BE SQUARE, ROUND OR SHAPE MAY VARY SO LONG AS MINIMUM DIMENSIONS ARE OBTAINED.
2. ALL CONCRETE COLLARS ARE TO BE CONSTRUCTED WITH CLASS A CONCRETE.
3. PAYMENT FOR LIN. FT. OF PIPE INCLUDES COLLARS.

CONCRETE COLLAR FOR JOINTING PIPE

PLAN OR SIDE SECTION

GENERAL NOTES:

1. SPECIFICATIONS: GEORGIA STANDARD, CURRENT EDITION & SUPPLEMENTS THERETO.
2. ILLUSTRATED PIPES, PIPE JOINTS, ALIGNMENT, SIZES, ETC. ARE SHOWN AS REPRESENTATIVE. ACTUAL REQUIREMENTS VARY PER LOCATION AS INDICATED IN THE PLANS.
3. JUNCTION BOXES DO NOT HAVE TO BE CONSTRUCTED SQUARE. W & W_1 DIMENSIONS MAY VARY ACCORDING TO PIPE SIZE.
4. ALL JUNCTION BOX TOPS SHALL BE EQUIPPED WITH EITHER AN EYE BOLT & RING (SHOWN) OR A LIFTING BAR (ALTERNATE).
5. REINFORCING IS REQUIRED FOR ALL PRECAST JUNCTION BOXES. REINFORCING MAY BE OMITTED FOR BUILT IN PLACE CONCRETE BOXES NOT OVER 10 FT. DEEP AND NOT LARGER THAN 3' X 3', CONSTRUCTION JOINTS PERMITTED IF DOWELED OR KEYED, ALL JUNCTION BOX TOPS SHALL BE REINFORCED.

DEPARTMENT OF TRANSPORTATION
STATE OF GEORGIA

STANDARD
PRECAST OR BUILT IN PLACE
JUNCTION BOXES
PIPE COLLARS, PIPE ELBOW & PIPE CURVED ALIGNMENT

NOT TO SCALE | REDRAWN JULY 2024 | JULY 1985

DATE / REVISION / BY

DES. ____ DRW. ____ TRA. ____ CHK. ____

(SUBMITTED) Floyd E. Hardy — STATE ROAD & AIRPORT DESIGN ENGR.
(APPROVED) Hal Kwon — STATE HIGHWAY ENGINEER

NUMBER 9031U

GDOT Georgia Department of Transportation | P. I. Number

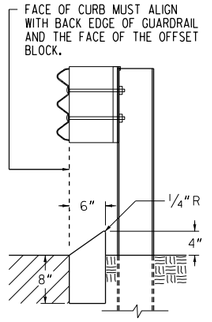

TYPE 8

TYPE 8 HEADER CURB IS USED IN CONJUNCTION WITH GUARDRAIL CONNECTIONS TO CONCRETE BARRIER AS NOTED ON GA. STD. 4382.

CURB TYPE	h	d
1	3'' OR 4''	6'' min.
2	6''	8'' min.
3	8''	10'' min.
4	10''	12'' min.
6	6''	7'' min.
7	6''	8'' min.
9	3'' OR 4''	8'' min.

RAISED EDGE WITH CONCRETE GUTTER

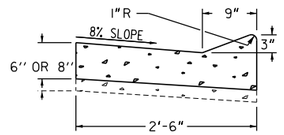

RAISED EDGE TO BE CONSTRUCTED WITH SAME CONCRETE MIX AS THE GUTTER AND SHALL BE FORMED MONOLITHIC WITH GUTTER. JOINTS IN RAISED EDGE SHALL MATCH THOSE IN THE GUTTER.

CONCRETE MEDIAN (Between Curbs)

NOTE: CURB TYPES SHOWN ARE TYPICAL. OTHER TYPES MAY BE SPECIFIED.

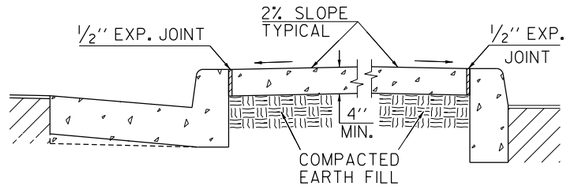

NOTE:
WIDTH OF CONCRETE MEDIAN WILL BE AS SHOWN IN PLANS

CONCRETE MEDIANS (Integral)

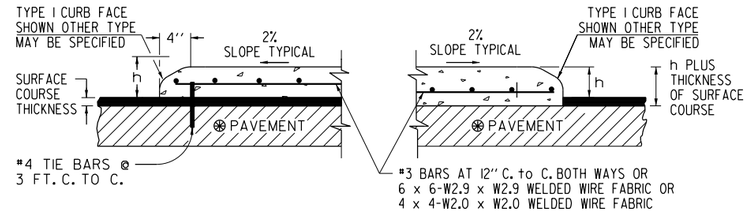

NOTE:
IF FINAL SURFACE COURSE IS PRESENT OR MUST BE INSTALLED BEFORE THE CONCRETE MEDIAN CAN BE INSTALLED, THEN DOWELED IN CONCRETE MEDIAN IS REQUIRED.

NOTE:
IF CONCRETE MEDIAN INTERCEPTS PEDESTRIAN CROSSWALKS, WHEELCHAIR RAMPS (CONSTRUCTION DETAIL A-3 AND A-4) WILL BE REQUIRED.

CONCRETE CURB & GUTTER

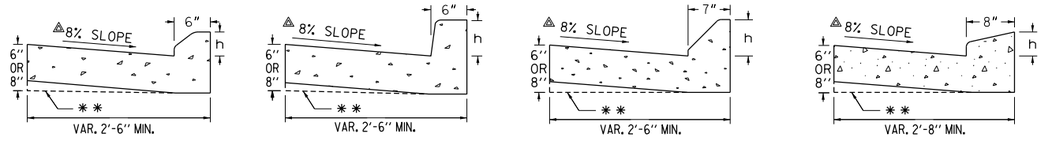

TYPE 1 | TYPE 2, 3 OR 4 | TYPE 7 | TYPE 9

** AT CONTRACTOR'S OPTION THE GUTTER THICKNESS MAY BE INCREASED AT EDGE OF PAVEMENT TO MAKE BOTTOM OF GUTTER PARALLEL WITH PAVING OF BASE COURSE, BUT THE GUTTER THICKNESS MUST NOT BE LESS THAN THE SPECIFIED 6" OR 8" AT ANY POINT.

△ WHEN POSITIVE SUPERELEVATION IS REQUIRED, THE SLOPE OF THE GUTTER ON THE HIGH SIDE SHALL BE A CONTINUATION OF THE SLOPE OF THE SUPERELEVATED PAVEMENT.

CONCRETE DOWELED INTEGRAL CURBS

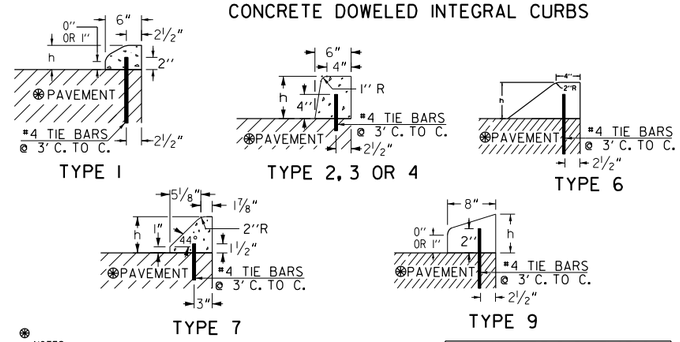

NOTES:
1. CONCRETE CURB CAN BE INSTALLED AFTER INTIAL SET AS LONG AS TIE BARS ARE DRILLED INTO UNDERLAYING CONCRETE PAVEMENT.
2. CONCRETE CURB CAN BE INSTALLED BEFORE INITIAL SET WITH DOWELS THAT ARE DRIVEN INTO UNDERLYING CONCRETE PAVMENT.
3. JOINTS IN CURB AND CONCRETE MEDIAN WILL MATCH THOSE IN THE CONCRETE PAVEMENT.
4. ALL TYPES OF CONCRETE CURB CAN BE PLACED ON ASPHALT PAVEMENTS WHERE TIE BARS MAY BE EITHER DRIVEN OR DRILLED INTO THE UNDERLYING PAVEMENT. CONTRACTION JOINTS SHALL BE CONSTRUCTED IN CURB OR CONCRETE MEDAIN AT 20 FT. SPACING.
5. TIE BARS FOR DOWELED CURBS MAY BE UNCOATED PLAIN OR DEFORMED BILLET-STEEL BARS (GRADE 40) AS USED FOR CONCRETE REINFORCEMENT. (AASHTO M-31)

MINIMUM TIE BAR LENGTHS (FOR CONC. DOWELED CURBS OR CONC. MEDIAN)		
CURB TYPE	P.C. CONC. PAV.	ASPHALT PAV.
1	6"	8"
2, 3 OR 4	8"	12"
6	6"	8"
7	6"	8"
9	6"	8"

DETAILS OF RECESSED CURB FOR DRIVEWAYS

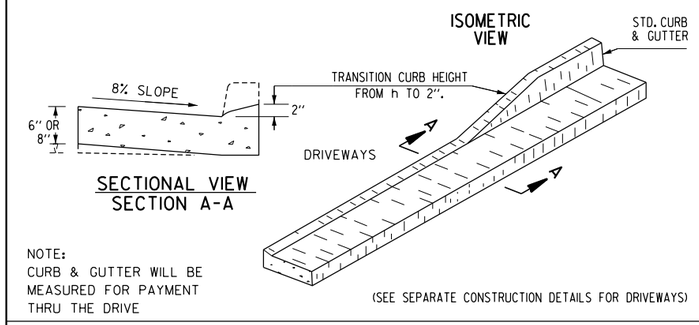

NOTE:
CURB & GUTTER WILL BE MEASURED FOR PAYMENT THRU THE DRIVE

(SEE SEPARATE CONSTRUCTION DETAILS FOR DRIVEWAYS)

CURB FACE DESIGN

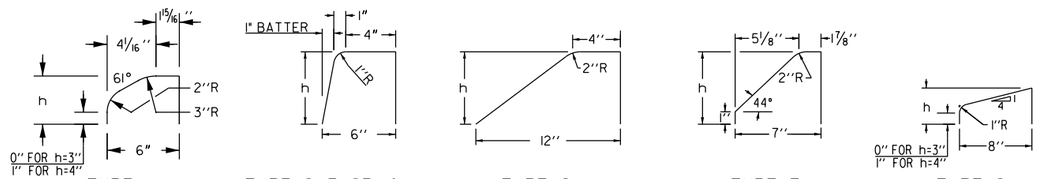

CONCRETE INTEGRAL CURB

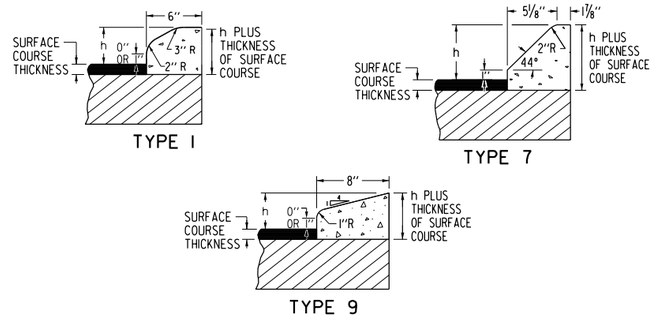

DETAILS OF CURB AND GUTTER TRANSITION TO RURAL SHOULDER

AT DOWNSTREAM ENDS OF CURB AND GUTTER CARRYING RUNOFF, A STUCTURE MUST BE PROVIDED TO DIRECT OR DISSIPATE CONCENTRATED FLOW

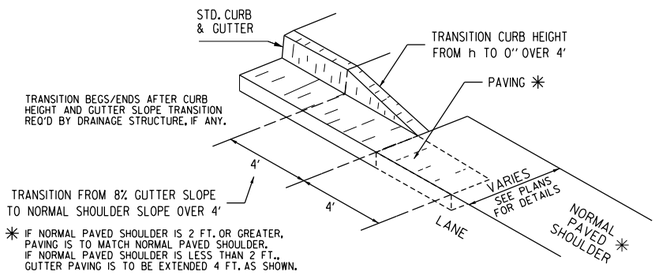

✳ IF NORMAL PAVED SHOULDER IS 2 FT. OR GREATER, PAVING IS TO MATCH NORMAL PAVED SHOULDER. IF NORMAL PAVED SHOULDER IS LESS THAN 2 FT., GUTTER PAVING IS TO BE EXTENDED 4 FT. AS SHOWN.

CONCRETE HEADER CURBS

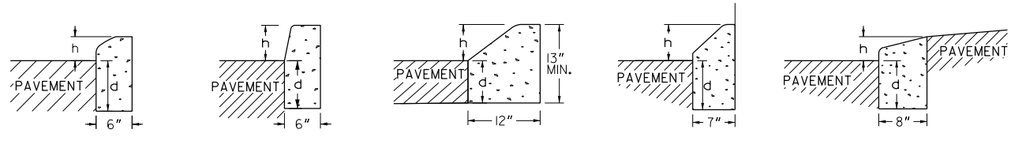

THE DIMENSION d MAY BE INCREASED AT CONTRACTOR'S OPTION SO BOTTOM OF HEADER CURB WILL ALIGN WITH BOTTOM OF PAVEMENT TYPICAL SECTION.

07-01-25	REV. MEDIAN "H" W/O TIE BARS	P.JN	
07-01-22	ADDED C&G TRANSITION DET.		
01-25-21	ADD 3" HEIGHT TO TP 1 & 9	ACP	
	REV TP 1 C.F.D. RADIUS DIMS	ACP	
	REV TP 9 C.F.D. DIM HT TO 1" FROM GR. LEVEL TO RADIUS		
-/-/-	SEE PREV. FOR OLDER REVS.		

DEPARTMENT OF TRANSPORTATION
STATE OF GEORGIA

STANDARD

CONCRETE CURB & GUTTER CONCRETE CURBS, CONCRETE MEDIANS

NOT TO SCALE | MAR. 2003

DES. ____ DRW. ____ TRA. ____ CHK. ____

(SUBMITTED) Daniel C. Pass — STATE DESIGN POLICY ENGINEER

(APPROVED) Marcus B. Pitts — CHIEF ENGINEER

NUMBER 9032B

STATE	PROJECT NUMBER	SHEET NO.	TOTAL SHEETS
GA.			

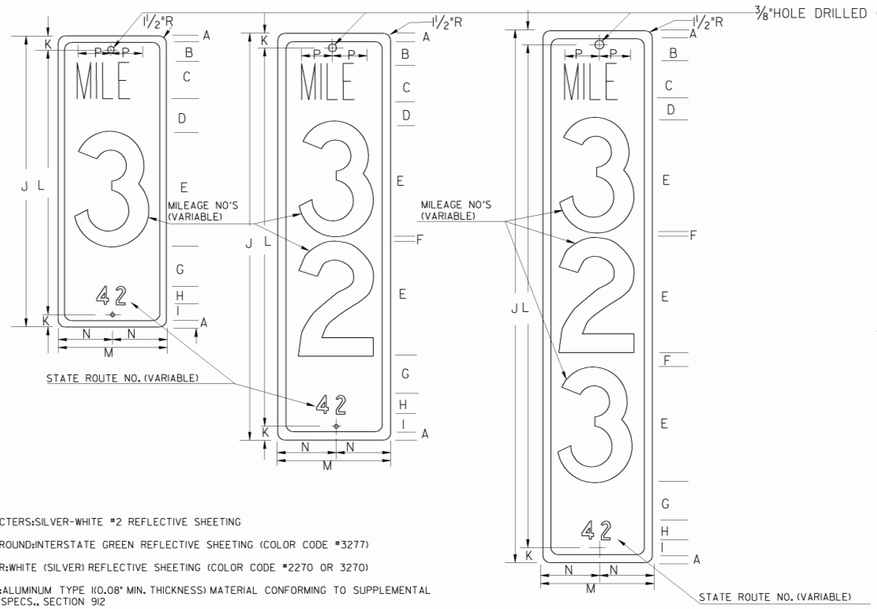

CHARACTERS: SILVER-WHITE #2 REFLECTIVE SHEETING

BACKGROUND: INTERSTATE GREEN REFLECTIVE SHEETING (COLOR CODE #3277)

BORDER: WHITE (SILVER) REFLECTIVE SHEETING (COLOR CODE #2270 OR 3270)

PLATE: ALUMINUM TYPE I (0.08" MIN. THICKNESS) MATERIAL CONFORMING TO SUPPLEMENTAL SPECS., SECTION 912

TYPICAL MILEPOST SIGN DETAILS

NOTE: INSTALLATION OF MILEPOST SHALL BE WITHHELD UNTIL THE GRASS IS ACCEPTED BY THE STATE.

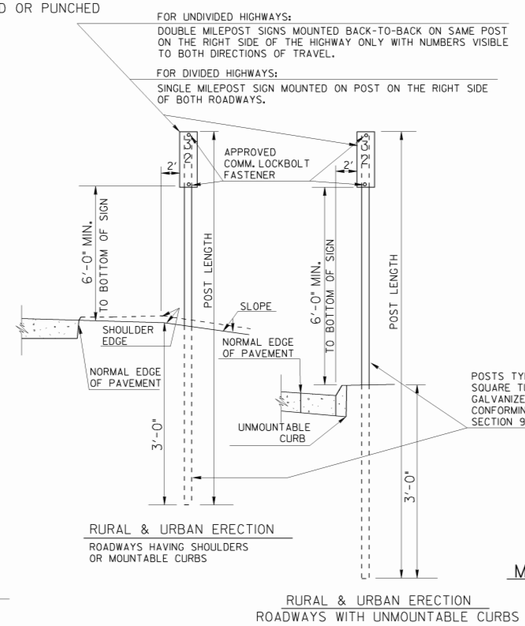

RURAL & URBAN ERECTION
ROADWAYS HAVING SHOULDERS OR MOUNTABLE CURBS

RURAL & URBAN ERECTION
ROADWAYS WITH UNMOUNTABLE CURBS

MILEPOSTS ON STATE ROUTES
(FOR CONVENTIONAL HIGHWAYS ONLY)

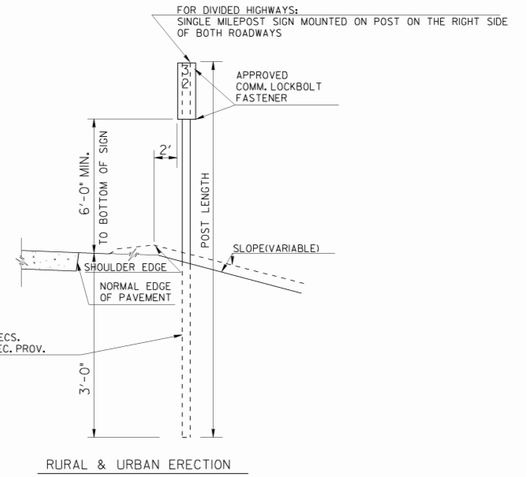

RURAL & URBAN ERECTION

MILEPOSTS ON INTERSTATE ROUTES & STATE ROUTES

(FOR FREEWAYS & EXPRESSWAYS) ROADWAYS HAVING GUARDRAIL NOT SHOWN. SEE NOTE BELOW.

TYPICAL MILEPOST ERECTION DETAILS

NOTE: MILEPOSTS SHALL BE LOCATED IN LINE WITH DELINEATOR POST OR, IF APPROPRIATE, IN THE SAME PLANE AS FACE OF GUARDRAIL POST WITH THE BOTTOM OF THE MARKER AT THE SAME HEIGHT AS THE DELINEATOR AS SHOWN IN THE DETAILS ABOVE.

POST	STUB SIZE
TYPE 7	2 1/4" x 2 1/4"

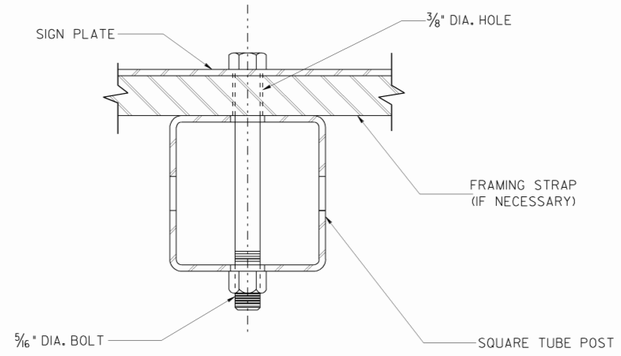

TYPICAL DETAIL

NOTE: SAMPLE OF COMMERCIAL LOCKBOLT FASTENER TO BE USED MUST BE SUBMITTED FOR APPROVAL PRIOR TO INSTALLATION

MILE POST MARKERS
DIMENSIONS (INCHES)

	FREEWAYS AND EXPRESSWAYS			CONVENTIONAL HIGHWAYS		
	1-DIGIT	2-DIGITS	3-DIGITS	1-DIGIT	2-DIGITS	3-DIGITS
A	1/2	1/2	1/2	1/2	1/2	1/2
B	2 1/2	2 1/2	2 1/2	1 1/2	1 1/2	1 1/2
C	4	4	4	4	4	4
D	3	3	3	2	2	2
E	10	10	10	6	6	6
F		3	2 1/2		3	3
G	1 1/4	3/4	3/4	1 1/4	1 1/4	1 1/4
H	ID	ID	ID	ID	ID	ID
I	1 1/4	3/4	3/4	1 1/4	1 1/4	1 1/4
J	24	36	48	18	27	36
K	1	1	1	1	1	1
L	22	34	46	16	25	34
M	12	12	12	10	10	10
N	6	6	6	5	5	5
P	4 3/4	4 3/4	4 3/4	3 3/4	3 3/4	3 3/4
POST LENGTH (LIN.FT.)	11	12	13	11	12	12

GENERAL NOTES:

1. MILEPOST ARE TO BE LOCATED AND ERECTED ON ACCURATE MILEAGE MEASUREMENTS MADE ON EITHER THE NORTH-BOUND OR EASTBOUND ROADWAY BEGINNING WITH ZERO MILEAGE AT THE SOUTH OR WEST STATE LINES FOR THE INTERSTATE HIGHWAY SYSTEM AND AT THE SOUTH OR WEST COUNTY LINES FOR THE STATE HIGHWAY SYSTEM AND AT JUNCTIONS WHERE ROUTES BEGIN AND RUNNING CONTINUOUS WITHIN THE STATE FOR THE INTERSTATE HIGHWAY SYSTEM AND RUNNING CONTINUOUS WITHIN THE COUNTY FOR THE STATE HIGHWAY SYSTEM. CORRESPONDING MILEPOSTS FOR SB OR WB ROADWAY OF DIVIDED HIGHWAYS ONLY, ARE TO BE LOCATED DIRECTLY OPPOSITE THOSE ON NB OR EB ROADWAYS.

2. WHERE ANY INTERFERENCE PREVENTS INSTALLING THE MILEPOST AT ITS ACCURATE LOCATION, IT MAY BE MOVED IN EITHER DIRECTION A MAXIMUM OF 50'. IF IT CANNOT BE PLACED WITHIN THAT DEGREE OF ACCURACY, IT SHALL BE OMITTED. MEASUREMENT TO THE NEXT MILEPOST LOCATION SHALL BE MADE FROM THE ACCURATELY ESTABLISHED MILE LOCATION AND NOT FROM THE ADJUSTED LOCATION.

3. MILEPOSTS SHALL BE INSTALLED ONLY AFTER IMPROVEMENTS ON EITHER SYSTEM HAVE PROGRESSED SUFFICIENTLY TO PERMIT THE POSTING OF ACCURATE MILEAGE. MILEPOSTS WILL ONLY BE ERECTED ON PAVED ROADS.

4. IT SHALL BE THE RESPONSIBILITY OF THE ENGINEER TO MARK THE LOCATION AND NUMERICAL DESIGNATION OF EACH MILEPOST. DISTANCES WILL BE OBTAINED BY THE USE OF A CERTIFIED ODOMETER IN A VEHICLE TRAVELING IN THE RIGHT HAND LANE IN THE DIRECTION IN WHICH THE MILEAGE INCREASES. NUMERICAL DESIGNATIONS SHALL BE DETERMINED AND COORDINATED FROM OFFICIAL GEORGIA D.O.T. MILEPOST RECORDS. CONTACT THE OFFICE OF TRAFFIC ENGINEERING AND SAFETY FOR CERTIFIED MILEPOST DATA.

5. WHERE TWO ROUTES ARE COMMON, THE MILEAGE WILL ONLY BE CARRIED AS THE LOWER NUMBERED ROUTE, BUT THE CORRECT MILEAGE ON THE OTHER ROUTE WILL BE MEASURED AND AFTER THE ROUTES SEPARATE, MILEPOST SHOWING THE CORRECT MILEAGE WILL BE ERECTED AS USUAL.

6. MATERIALS SHALL CONFORM TO THE FOLLOWING SPECIFICATIONS:
   (A) HIGHWAY SIGNS-SECTION 636
   (B) SIGN FABRICATION-SECTION 910, EXCEPT THAT THE MESSAGE SHALL BE OF REFLECTIVE MATERIAL, PRESSURE SENSITIVE.
   (C) SIGN POST-SECTION 911 AND/OR SPEC. PROV.
   (D) SIGN BLANKS- SECTION 912
   (E) REFLECTORIZING MATERIALS-SECTION 913

REVISION	BY	DATE
REVISED POST TO A TYPE 7	G.I.O.	3-30-06

DEPARTMENT OF TRANSPORTATION
STATE OF GEORGIA

STANDARD

MILEPOSTS

NO SCALE — RE-DRAWN SEPT. 1999

DES. ____ DRW. ____ TRA. ____ CHK. ____

(SUBMITTED) STATE ROAD & AIRPORT DESIGN ENGINEER

(APPROVED) CHIEF ENGINEER

NUMBER 9033

STATE	PROJECT NUMBER	SHEET NO.	TOTAL SHEETS
GA.			

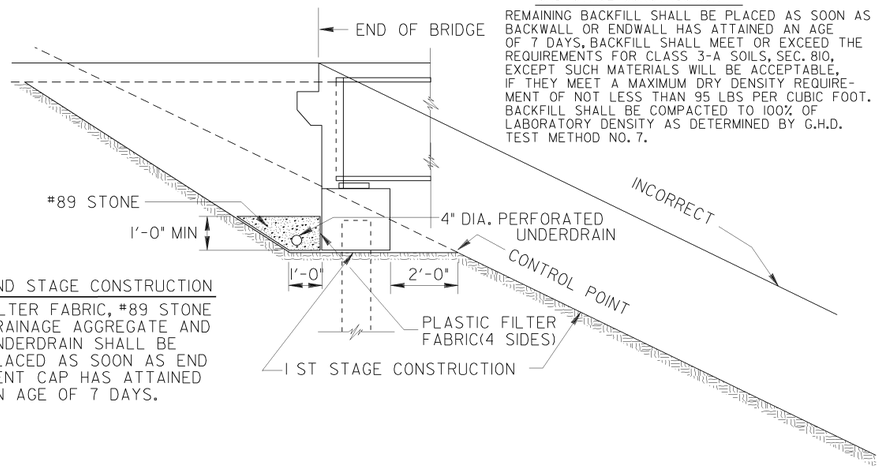

3RD STAGE CONSTRUCTION

REMAINING BACKFILL SHALL BE PLACED AS SOON AS BACKWALL OR ENDWALL HAS ATTAINED AN AGE OF 7 DAYS, BACKFILL SHALL MEET OR EXCEED THE REQUIREMENTS FOR CLASS 3-A SOILS, SEC. 810, EXCEPT SUCH MATERIALS WILL BE ACCEPTABLE, IF THEY MEET A MAXIMUM DRY DENSITY REQUIREMENT OF NOT LESS THAN 95 LBS PER CUBIC FOOT. BACKFILL SHALL BE COMPACTED TO 100% OF LABORATORY DENSITY AS DETERMINED BY G.H.D. TEST METHOD NO. 7.

2ND STAGE CONSTRUCTION

FILTER FABRIC, #89 STONE DRAINAGE AGGREGATE AND UNDERDRAIN SHALL BE PLACED AS SOON AS END BENT CAP HAS ATTAINED AN AGE OF 7 DAYS.

SKETCH SHOWING CONSTRUCTION OF FILLS AT ENDS OF BRIDGES

NO SCALE

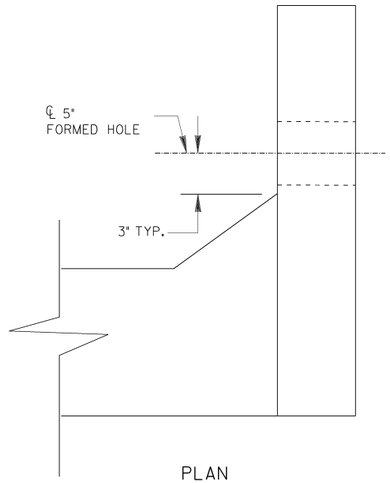

PLAN

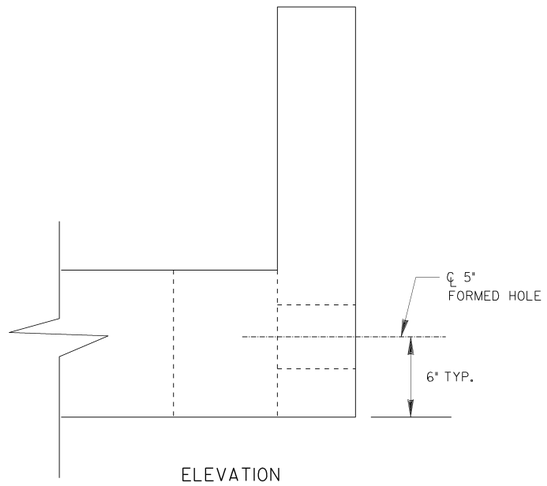

ELEVATION

WINGWALL DETAIL

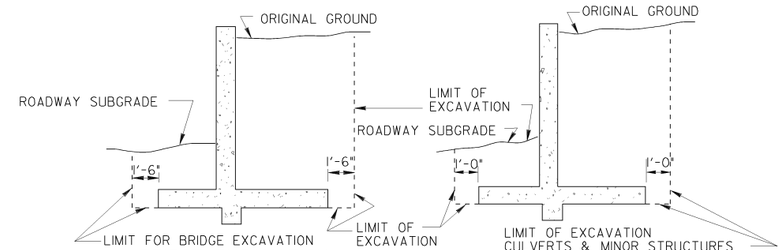

TYPICAL DETAILS OF EXCAVATION AT STRUCTURES

NOTE: WHERE FILL IS PLACED BEFORE CONSTRUCTION OF STRUCTURES THE COST OF EXCAVATION AND BACKFILL WILL BE INCLUDED IN THE COST OF OTHER ITEMS. THERE WILL BE NO PAYMENT FOR EXCAVATION UNDER THIS CONDITION.

NOTES:

1. PERFORATED UNDERDRAIN SHALL EXTEND TO THE INSIDE FACE OF WING AT THE HIGH END OF THE CAP.
2. AT THE LOW END OF THE CAP, CONNECT PERFORATED UNDERDRAIN TO A COMPATIBLE SOLID PIPE FROM THE INSIDE FACE OF WING UNTIL IT EXITS THE SLOPE. SOLID PIPE SHALL HAVE A MINIMUM SLOPE OF 2%.
3. SOLID PIPE MAY BE PLACED AT EITHER END OF CAPS WITH LEVEL BOTTOM.
4. PERFORATED UNDERDRAIN SHALL BE INSTALLED PARALLEL TO BOTTOM OF CAP. LOW POINTS OR SAGS THAT MAY TRAP WATER WILL NOT BE ALLOWED.
5. FILTER FABRIC SHALL NOT BE ATTACHED TO THE END BENT CAP.
6. COST FOR PROVIDING AND INSTALLING FILTER FABRIC, UNDERDRAIN, AND STONE SHALL BE INCLUDED IN THE PRICE BID FOR CONTRACT ITEMS.

SHADED AREA IS BRIDGE EXCAVATION.

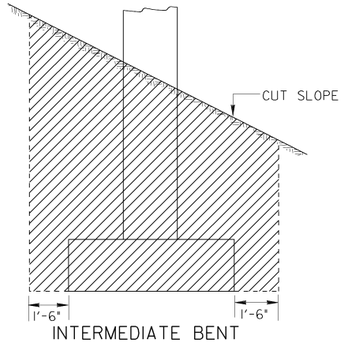

INTERMEDIATE BENT

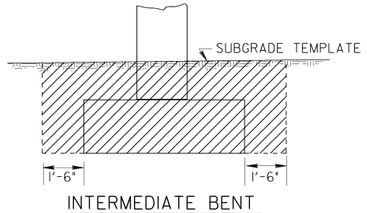

INTERMEDIATE BENT

TYPICAL EXCAVATION DETAILS AT BRIDGE BENTS IN CUT SECTIONS

NO SCALE

DEPARTMENT OF TRANSPORTATION
STATE OF GEORGIA

STANDARD
TYPICAL FILL DETAIL AT END OF BRIDGE

NO SCALE — REDRAWN SEPT., 1999

DATE | REVISION | BY

DES. ____ DRW. ____ TRA. ____ CHK. ____

(SUBMITTED) James A. Kennel
STATE ROAD & AIRPORT DESIGN ENGR.

(APPROVED) Lonnie L. Bradley
CHIEF ENGINEER

NUMBER 9037

STATE	PROJECT NUMBER	SHEET NO.	TOTAL SHEETS
GA.			

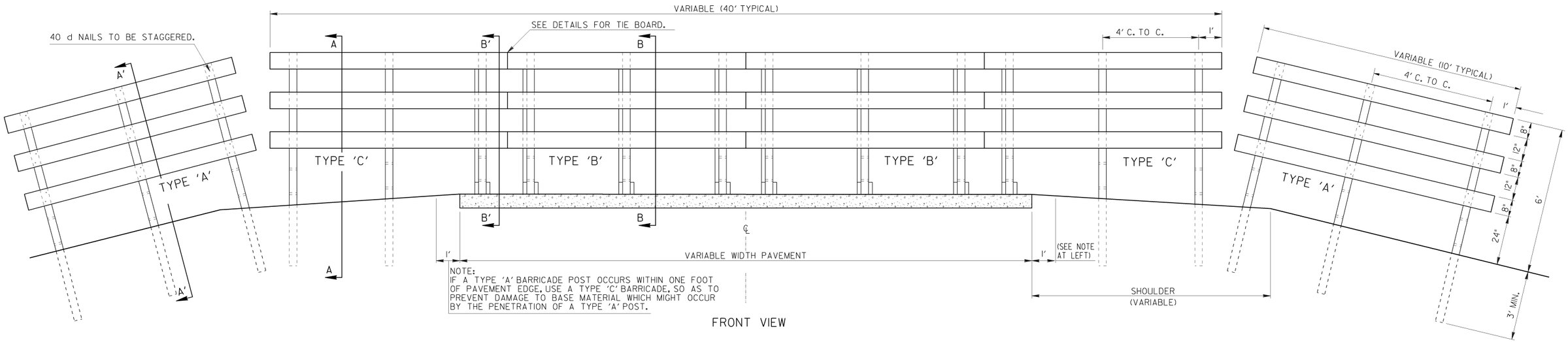

FRONT VIEW

STRIPE ORIENTATION

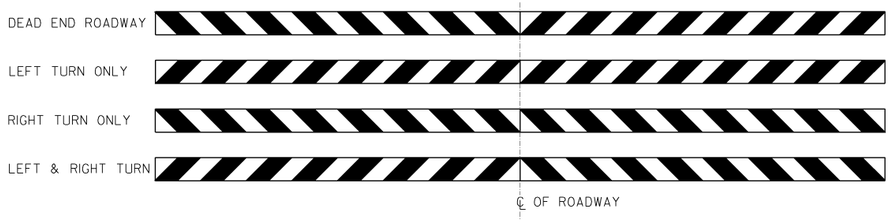

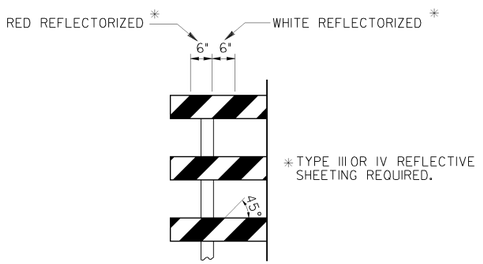

STRIPE DETAIL

GENERAL NOTES:

1. BARRICADE SHALL BE PAINTED WHITE, EXCEPT AS OTHERWISE SHOWN.
2. SPECIFICATIONS: GEORGIA STANDARD, CURRENT EDITION, AND SUPPLIMENTS THERETO.
3. ALL TIMBER SHALL MEET THE REQUIREMENTS OF SECTION 860 AND SHALL BE CCA TREATED PER SECTION 863.
4. REFLECTIVE SHEETING SHALL BE IN ACCORDANCE WITH SECTION 913.
5. DIMENSIONS SHOWN FOR TIMBER ARE CONSIDERED TO BE NOMINAL DIMENSIONS.

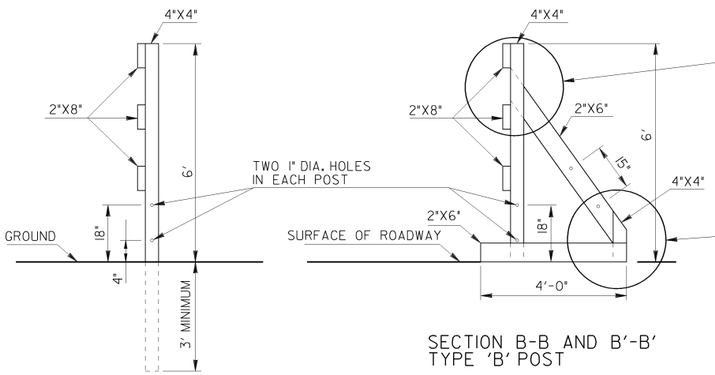

SECTION A-A AND A'-A'
TYPE 'A' POST

SECTION B-B AND B'-B'
TYPE 'B' POST

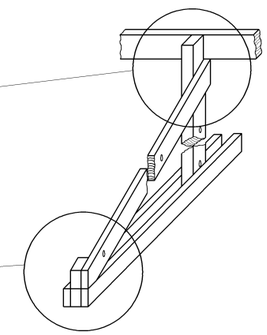

DETAILS FOR FASTENING
2"x6" BRACE FOR TYPE 'B' POST

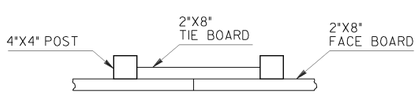

TOP VIEW

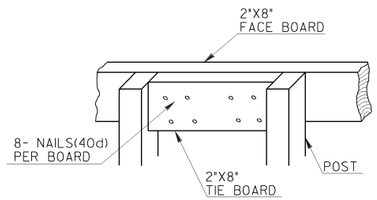

BACK VIEW

DETAIL OF TIE BOARD FOR 10' BARRICADE PANELS

NOTE: TIE BOARDS TO BE FASTENED ON THE BACK OF THE BARRICADE ON THE TOP AND BOTTOM BOARDS WHERE NECESSARY.

BY	DATE	REVISION
G.L.O.	2-1-01	REFL. SHEETING SPEC.
		ADDED STRIPE ORIENTATION
	3-30-06	REV. REFL. SHEETING &

DEPARTMENT OF TRANSPORTATION
STATE OF GEORGIA

STANDARD
PERMANENT TIMBER TYPE BARRICADE

NO SCALE — REDRAWN SEPT., 1999

DES. 7-58 (SUBMITTED) STATE ROAD & AIRPORT DESIGN ENGINEER
DRW. ____
TRA. ____
CHK. ____ (APPROVED) CHIEF ENGINEER

NUMBER 9039

GDOT Georgia Department of Transportation | P. I. No. XXXXXXX

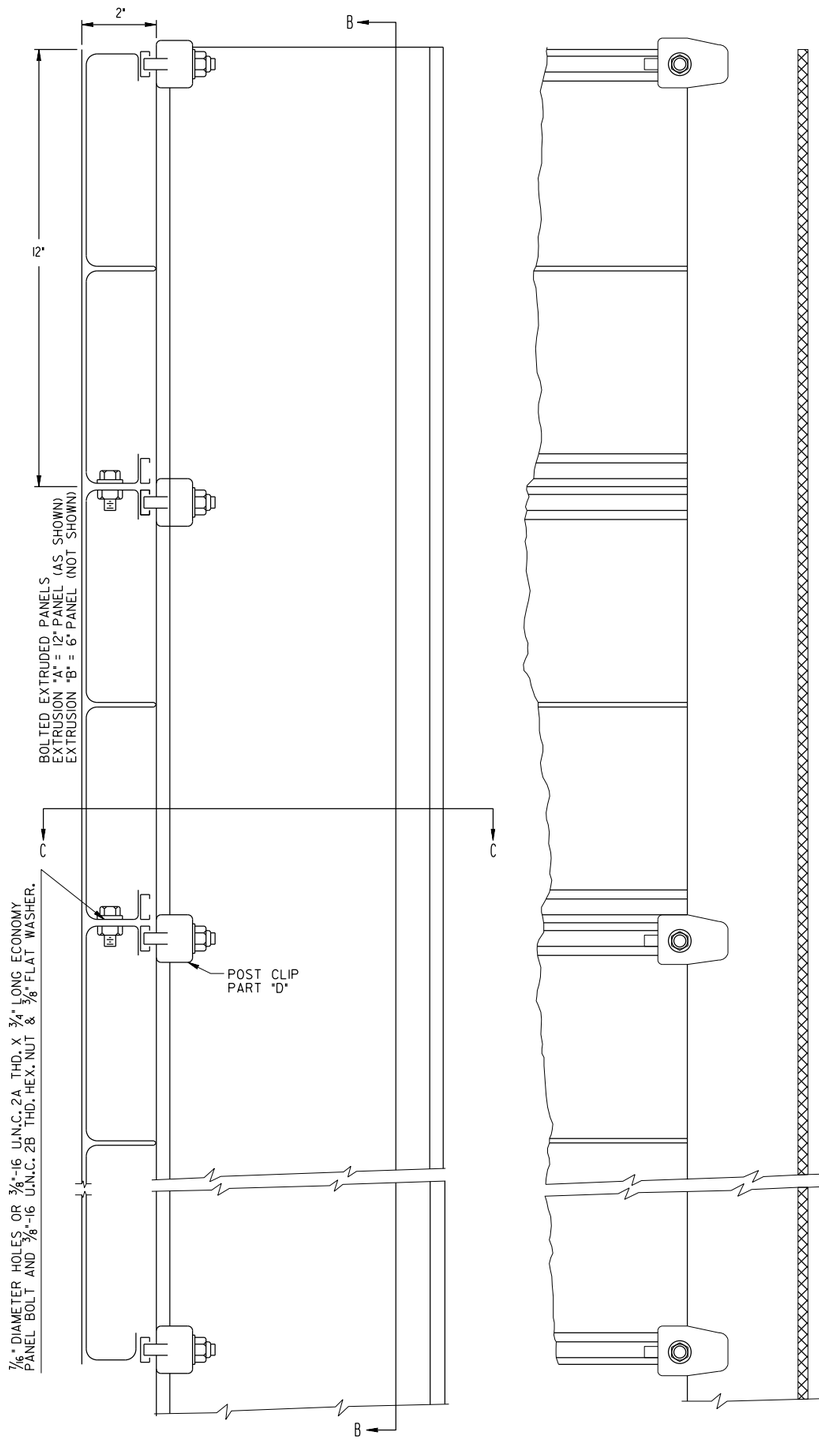

SECTION A-A

SECTION B-B

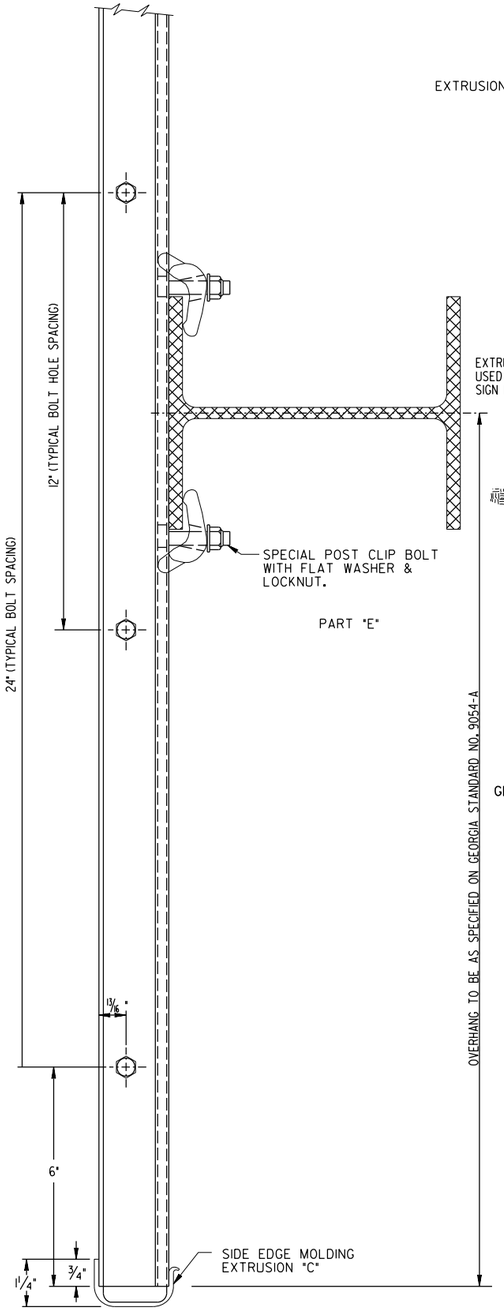

NOTE: FOR DETAILS ON EXTRUSIONS A,B,C, AND PARTS "D" & "E", REFER TO GA. STANDARD NO. 9042.

SECTION C-C

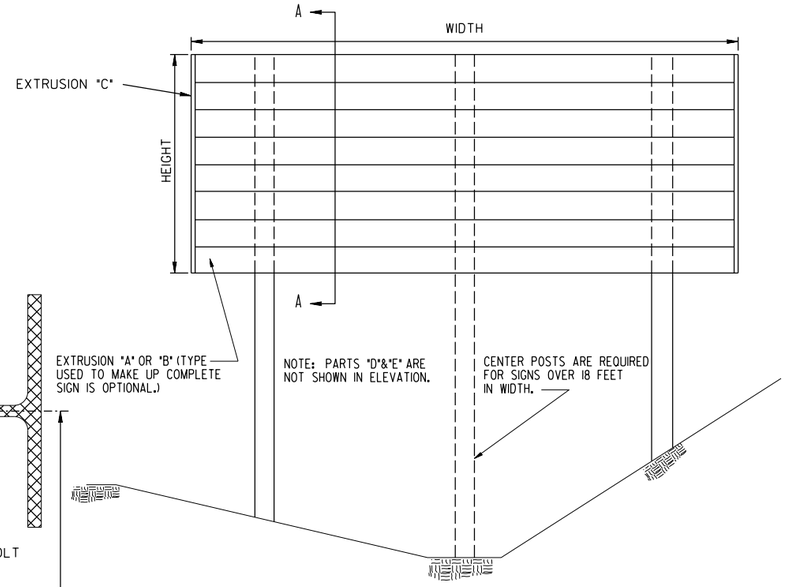

FRONT ELEVATION

FOR ERECTION AND FOUNDATION DETAILS ON SPECIAL ROADSIDE SIGNS REFER TO GEORGIA STANDARD NO. 9054-A, 9054-B, AND 9054-C.

GENERAL NOTES:

1. SPECIFICATIONS: GEORGIA STANDARD AND CURRENT EDITION, AND SUPPLEMENTS THERETO.
2. BOLTED EXTRUDED PANELS SHALL BE HORIZONTAL AND THE PANEL FACES SHALL BE FLUSH WITHIN COMMERCIAL EXTRUSION TOLERANCES AFTER ERECTION OF THE SIGN IS COMPLETE.
3. POST CLIPS SHALL BE PLACED AS SHOWN IN SECTION B-B DETAIL.
4. ALUMINUM LOCK NUTS SHALL BE TORQUED TO A MINIMUM OF 20 FOOT POUNDS.
5. SURFACE PREPARATION AND FABRICATION OF PANELS TO BE IN ACCORDANCE WITH THE SPECIFICATIONS.
6. ALL SIGN PARTS AND ACCESSORIES TO BE MADE OF ALUMINUM ALLOY.
7. WHERE SIGNS ARE TO BE ASSEMBLED AND MOUNTED ONE ABOVE THE OTHER, A TWO INCH MINIMUM AIR SPACE BETWEEN SIGNS IS REQUIRED.
8. THE LOCATION OF THE BOLTS CONNECTING THE EXTRUDED PANELS SHALL BE OFFSET ON ADJACENT PANELS.

DEPARTMENT OF TRANSPORTATION
STATE OF GEORGIA

STANDARD

ASSEMBLY DETAILS ON ALUMINUM BOLTED EXTRUDED PANELS (FOR SPECIAL ROADSIDE SIGNS)

NOT TO SCALE | REDRAWN JULY 2024 | AUG 1993

DATE / REVISION / BY

DES. 6-60 W.S.D.
REV. & REDR. 7-93

(SUBMITTED) Roland Hennis — STATE ROAD & AIRPORT DESIGN ENGR.
(APPROVED) Frank L. Danielly — STATE HIGHWAY ENGINEER

NUMBER 9041

GDOT Georgia Department of Transportation | P. I. No. XXXXXXX

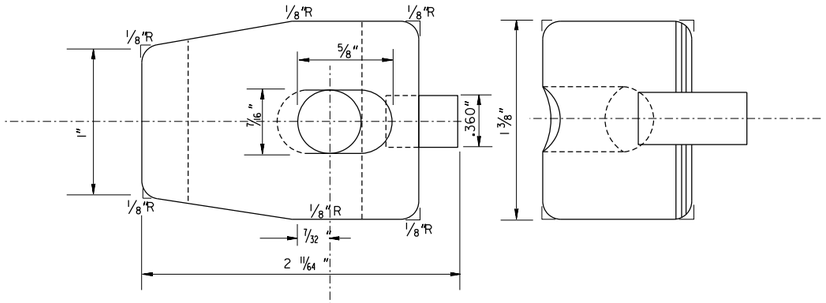

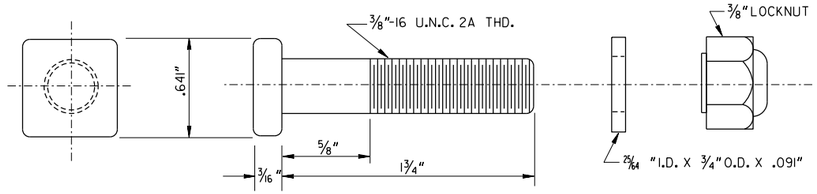

SPECIAL POST CLIP BOLT WITH FLAT WASHER & LOCKNUT
PART "E"

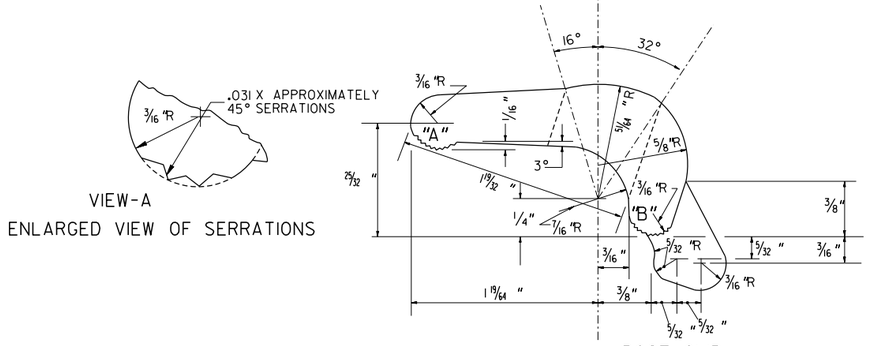

POST CLIP
PART "D"(CAST)

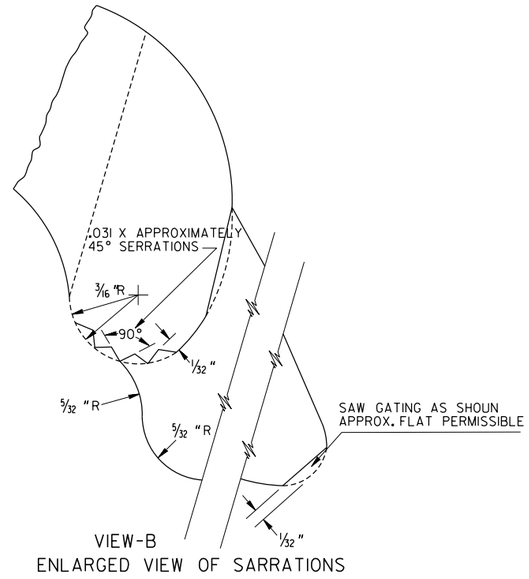

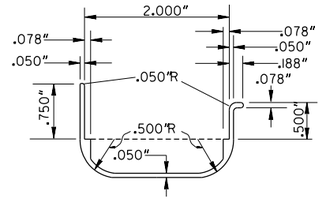

SIDE EDGE MOLDING
EXTRUSION "C"

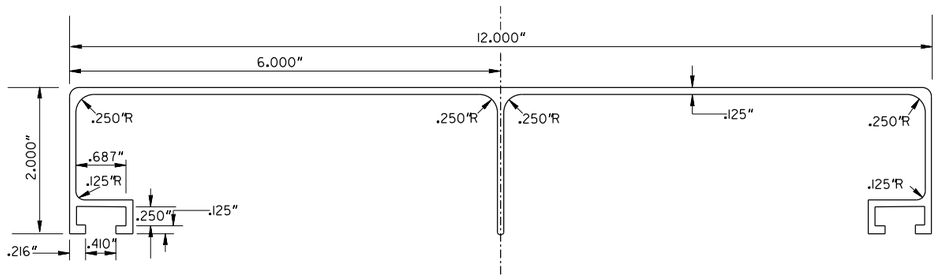

12" PANEL -EXTRUSION "A"

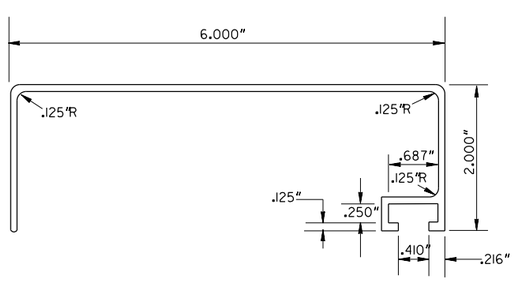

6" PANEL - EXTRUSION "B"

NOTE:
WALL THICKNESS = .078", UNLESS OTHERWISE SPECIFIED.
ALL INSIDE AND OUTSIDE CORNERS = .031" RADIUS, UNLESS OTHERWISE SPECIFIED.

GENERAL NOTES

1. SPECIFICATIONS: GEORGIA STANDARD AND/OR SPECIAL PROVISIONS
2. FOR ASSEMBLY DETAILS ON EXTRUSIONS A, B, C, PARTS D & E SEE GA STANDARD 9041.
3. ALTERNATE ASSEMBLY COMPONENTS OF COMPARABLE ACCEPTABLE DESIGN MAY BE USED UPON THE APPROVAL OF THE HIGHWAY ENGINEER.

BY	REVISION	DATE
R.K.C.	ADDED GENERAL NOTE #2	3-27-61
A.V.S.	DELETE ASTM DESIGNATION & REV. GEN. NOTES	9-27-66

DEPARTMENT OF TRANSPORTATION
STATE OF GEORGIA

STANDARD

ALUMINUM BOLTED EXTRUDED PANELS

ASSEMBLY COMPONENTS DETAILS (FOR SPECIAL ROADSIDE SIGNS)

NOT TO SCALE | REDRAWN JULY 2024 | JUNE 1960

DESIGNED W.S.D.
DRAWN O.R.A.
TRACED G.C.R.
CHECKED C.E.B. W.C.L.

SUBMITTED _____ STATE ROAD DESIGN ENGINEER
APPROVED _____ STATE HIGHWAY ENGINEER

NUMBER 9042

STATE	PROJECT NUMBER	SHEET NO.	TOTAL SHEETS
GA.			

NOTE: WHEN SPUR DIKE IS CONSTRUCTED SEPARATELY FROM BRIDGE, RIPRAP "A" SHALL BE PLACED BY GRADING CONTRACTOR AND RIPRAP "B" WILL BE PLACED IN THE FUTURE BY THE BRIDGE CONTRACTOR. WHEN GRADING AND BRIDGE IS LET UNDER SAME CONTRACT THEN THE RESPONSIBILITY OF PLACING RIPRAP "A" AND "B" WILL BE THE PRIME CONTRACTOR'S. FILTER FABRIC SHALL BE PLACED BY THE CONTRACTOR RESPONSIBLE FOR PLACING RIPRAP "A".

HW_{50} = HIGHWATER 50 YEAR FLOOD

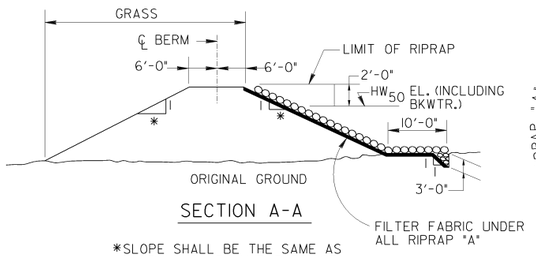

SECTION A-A

*SLOPE SHALL BE THE SAME AS ENDROLL SLOPE UNDER BRIDGE.

NOTE: "X" AXIS TO BE PARALLEL TO ENDROLL SLOPE PLANE UNDER BRIDGE.

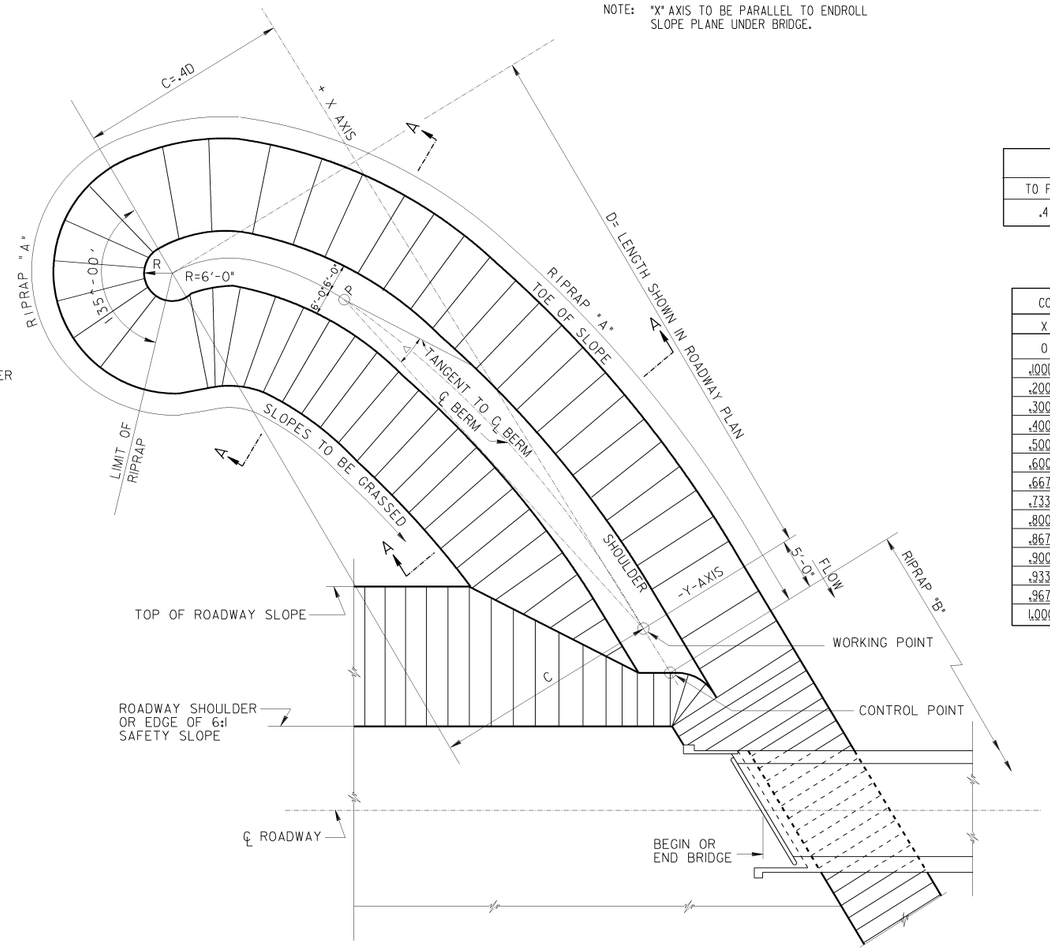

EQUATIONS	
TO FIND "Y" COORDINATE	TO FIND Δ
$.4\left(D-\sqrt{D^2-X^2}\right)$	+ ARCTAN $.4X/\sqrt{D^2-X^2}$ - ARCTAN Y/X

COORDINATES		ANGLE
X	Y	Δ
0	0	0°-0′
.100D	.005C	1°-09′
.200D	.020C	2°-21′
.300D	.046C	3°-39′
.400D	.083C	5°-08′
.500D	.134C	6°-53′
.600D	.200C	9°-06′
.667D	.255C	11°-00′
.733D	.320C	13°-26′
.800D	.400C	16°-46′
.867D	.501C	21°-46′
.900D	.564C	25°-29′
.933D	.641C	30°-46′
.967D	.744C	39°-23′
1.000D	1.000C	68°-12′

NOTE: TO SET TOP AND BOTTOM OF SLOPE, SET ON ANY POINT P ON C BERM. SIGHT BACK ON WORKING POINT AND TURN ANGLE Δ TO BECOME TANGENT TO ℄ BERM. TOP AND BOTTOM OF SLOPE ARE SET NORMAL TO TANGENT.

GENERAL NOTES

SPECIFICATIONS: GEORGIA STANDARD, CURRENT EDITION & SUPPLEMENTS THERETO.

FILTER FABRIC SHALL BE PLASTIC WOVEN FOR USE BENEATH RIPRAP PER SECTION 881.

NOTE:
STANDARD No 9046 A REPLACES STANDARD No 9046.

DEPARTMENT OF TRANSPORTATION
STATE OF GEORGIA

STANDARD

EARTH SPUR DIKE

NO SCALE — REDRAWN SEPT., 1999

DATE / REVISION / BY

DESIGNED
DRAWN
TRACED
CHECKED

(SUBMITTED) James A. Kennel
STATE ROAD & AIRPORT DESIGN ENGINEER

(APPROVED) Lonnie L. Puckett
CHIEF ENGINEER

NUMBER 9046A

GDOT Georgia Department of Transportation | P. I. No. XXXXXXX

NOTE: PANEL & LEGEND DETAILS NOT SHOWN ON THIS STANDARD. (COVERED UNDER SEPARATE DRAWINGS.)

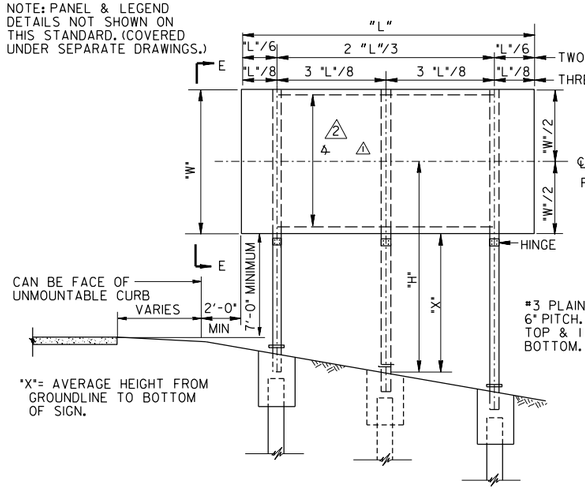

TYPICAL SIGN ERECTION DETAILS

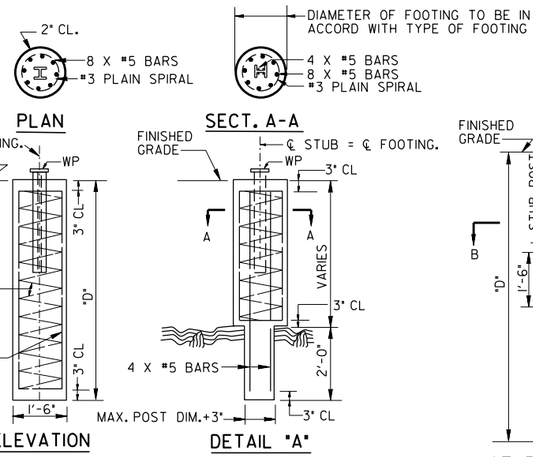

ELEVATION DETAIL "A"

TYPE I FOOTING DETAILS

(USE DETAIL "A" IF ROCK IS ENCOUNTERED)

NOTE: STUB POST SIZE SAME AS FOR SIGN POST

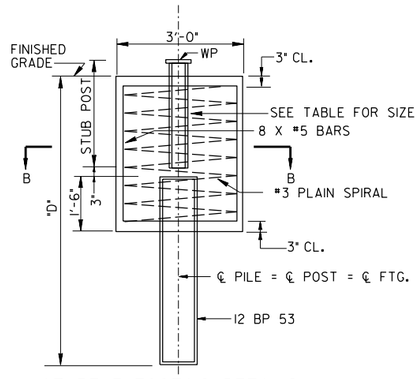

*TYPE 3 FOOTING DETAILS

* FOR TYPE 3 FOOTINGS WITH LESS THAN 4'-6½" EARTH COVER TO ROCK, BUILD FOOTINGS ACCORDING TO DETAIL "A". THE DIAMETER OF THE UPPER CONCRETE PORTION OF THE FOOTING WILL BE 3'-0". SHOULD 4'-6½" OR MORE OF EARTH COVER EXIST BUT LESS THAN "D" SECURELY SOCKET PILE INTO ROCK STRATA 1'-0"± . PILE SHALL BE EXTENDED INTO CONCRETE 1'-6".

IN CASE THE PILE CAN NOT BE SECURELY SOCKETED INTO ROCK 1'-0"±, THE SIGN MAY BE MOVED UP TO 50 FEET UP OR DOWN THE ROAD TO OBTAIN A BETTER FOUNDATION.

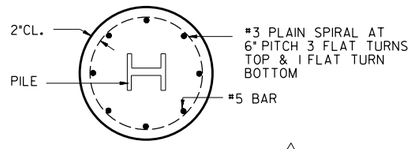

SECTION B-B

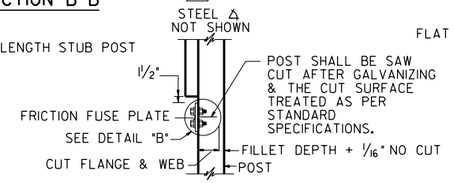

TYPICAL SIDE VIEW OF HINGE

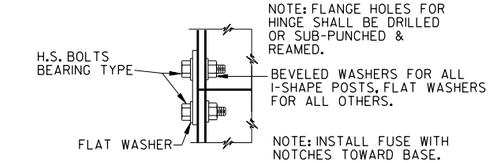

DETAIL "B"

FABRICATOR NOTE: IMPORTANT-ALL FRICTION FUSE BOLTS SHALL BE TIGHTENED IN THE SHOP FOLLOWING A METHOD APPROVED BY THE ENGINEER. TIGHTENING SHALL BE TO SUCH A DEGREE AS TO OBTAIN THE FOLLOWING MINIMUM RESIDUAL TENSIONS IN EACH BOLT.

BOLT SIZE	MIN. RESIDUAL BOLT TENSION
½" Ø	12,050 LBS.
⅝" Ø	19,200 LBS.
¾" Ø	28,400 LBS.
⅞" Ø	36,050 LBS.

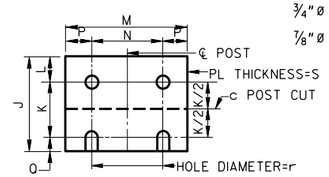

USE H.S. BOLTS WITH HEX. HD., & HEX NUT, ONE FLAT WASHER UNDER EACH BOLT HD. & BEVEL OR FLAT WASHER (WHERE REQUIRED) UNDER EACH NUT.

FUSE PLATE DETAIL

(SEE TABLE FOR DIMENSIONS)

DESIGN DATA

ADAPTED FROM THE STATE HIGHWAY DEPARTMENT OF TEXAS. DESIGN WIND VELOCITY AS SHOWN.

POST SIZE / 3 \ DIM	BASE CONNECTION DATA TABLE: BOLT SIZE & TORQUE	A	B	C	D	E	F	G	H	I
S 3x5.7	½"Ø X 2½" TORQUE=200"#	SEE DETAIL								
S 4x7.7										
W 6x9	⅝"Ø X 2¾" TORQUE=450"#	5"	2"	1¼"	2¾"	1⅛"	¾"	½"	¼"	11/32"
W 6x12										
W 6x15										
W 8x18										
W 8x21	¾"Ø X 3½" TORQUE=750"#	6"	2¼"	1⅜"	3½"	1¼"	1"	¾"	⅝"	13/32"
W 10x22										
W 10x26										
W 12x26										

POST SIZE / 3 \ DIM	FUSE PLATE DATA TABLE: J	K	L	M	N	P	O	R	S	BOLT Ø	STUB POST DATA: STUB LENGTH	STUB PROJECTION
S 3x5.7	3⅛"	1½"	1⅛"	2⅝"	1½"	⅝"	½"	⅝"	¼"	½" Ø	1'-6"	3½"
S 4x7.7	3⅛"	1½"	1⅛"	2⅝"	1½"	⅝"	½"	⅝"	¼"	½" Ø	1'-6"	3½"
W 6x9	3½"	2"	1⅛"	4"	2¼"	⅞"	½"	⅝"	¼"	½" Ø	2'-0"	3"
W 6x12	3¾"	2"	1⅛"	4"	2¼"	⅞"	5/8"	11/16"	⅜"	⅝" Ø	2'-0"	3"
W 6x15	4½"	2½"	1¼"	6"	3½"	1¼"	¾"	13/16"	½"	¾" Ø	2'-6"	3"
W 8x18	4½"	2½"	1¼"	5¼"	2¾"	1¼"	¾"	13/16"	½"	¾" Ø	2'-6"	3"
W 8x21	4⅞"	2½"	1½"	5¼"	2¾"	1¼"	⅞"	15/16"	9/16"	⅞" Ø	3'-0"	2½"
W 10x22	5⅜"	3"	1½"	5¾"	2¾"	1½"	⅞"	15/16"	9/16"	⅞" Ø	3'-0"	2½"
W 10x26	5⅜"	3"	1½"	5¾"	2¾"	1½"	⅞"	15/16"	9/16"	⅞" Ø	3'-0"	2½"
W 12x26	5⅜"	3"	1½"	6½"	3½"	1½"	⅞"	15/16"	9/16"	⅞" Ø	3'-0"	2½"

PROCEDURE FOR ASSEMBLY OF BASE CONNECTION

1. ASSEMBLE POST TO STUB WITH BOLTS & WITH ONE FLAT WASHER ON EACH BOLT BETWEEN PLATES.
2. SHIM AS REQUIRED TO PLUMB POST.
3. TIGHTEN ALL BOLTS TO THE MAXIMUM POSSIBLE WITH 12" TO 15" WRENCH TO BED WASHERS & SHIMS & TO CLEAN BOLT THREADS. THEN LOOSEN EACH BOLT IN TURN & RETIGHTEN IN A SYSTEMATIC ORDER TO THE PRESCRIBED TORQUE. (SEE TABLE)
4. BURR THREADS AT JUNCTION WITH NUT USING A CENTER PUNCH TO PREVENT NUT LOOSENING.

GENERAL NOTES:

1. SPECIFICATIONS-GEORGIA STANDARD AND/OR SPECIAL PROVISIONS.
2. ALL CONCRETE SHALL BE CLASS "A".
3. ALL STRUCTURAL STEEL SHALL BE A.S.T.M. DESIGNATION A-36 & SHALL BE GALV. AFTER FABRICATION IN ACCORDANCE WITH A.S.T.M. SPECIFICATION A-123 & A-153 (EXCEPT AS NOTED AT FUSE PLATES). ALL HOLES SHALL BE DRILLED◉ & ALL CUTS SHALL PREFERABLY BE SAW CUTS. FLAME CUTTING WILL BE PERMITTED PROVIDED ALL EDGES ARE GROUND FLAT & SMOOTH. STEEL △'S SHALL BE A-36.
4. ALL HIGH STRENGTH BOLTS, NUTS, & WASHERS SHALL CONFORM TO A.S.T.M. A-325. TIGHTEN THE HIGH STRENGTH BOLTS IN THE BASE CONNECTION ONLY TO THE TORQUE SHOWN IN THE TABLE. DO NOT OVERTIGHTEN.
5. POSTS MUST BE PLUMB & LOCATED AS SPECIFIED.
6. THE FACE OF ALL FLANGES OF POSTS SHALL BE IN THE SAME PLANE.
7. SIGN FACES SHALL BE ORIENTED TO AVOID SPECULAR REFLECTION ORDINARILY BY A SLIGHT TURNING AWAY FROM THE ROADWAY OF APPROXIMATELY 3 DEGREES. CARE SHALL BE TAKEN TO KEEP THE ADJUSTMENT SMALL SO AS TO MAINTAIN ADEQUATE REFLECTIVE VALUES.
8. EXCAVATION - DURING EXCAVATION, SURROUNDING SOIL SHALL REMAIN UNDISTURBED. ANY BACKFILLING REQUIRED SHALL BE DONE IN ACCORDANCE WITH THE STANDARD SPECIFICATIONS.
9. FOR FIELD REPAIR OF DAMAGE TO SPELTER COATING DUE TO WELDING OR OTHER CAUSES, SEE THE STANDARD SPECIFICATIONS.
10. OTHER REQUIREMENTS - FOR GENERAL NOTES & CONTRACT REQUIREMENTS, SEE SPECIAL PLANS, SUPPLEMENTAL SPECS. & SPECIAL PROVISIONS.
11. PILES SHALL CONFORM TO THE STANDARD SPECIFICATIONS.

◉ EXCEPT AS NOTED

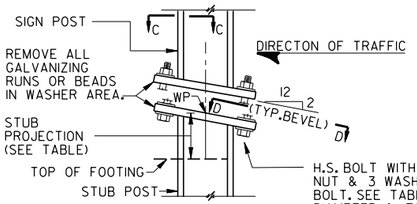

SIGN POST AND STUB POST ELEVATION FOR S SHAPES

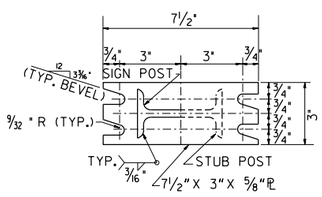

SECTION C-C SECTION D-D

SECTIONS SHOWN ARE FOR INSTALLATIONS ON RIGHT SHOULDER & IN GORE. PLATE SLOT BEVELS ARE OPPOSITE HAND FROM THAT SHOWN FOR INSTALLATIONS ON LEFT SHOULDER.

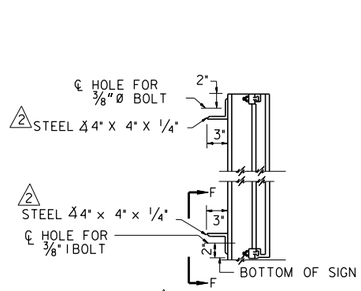

2 STEEL △ DETAIL SECTION E-E

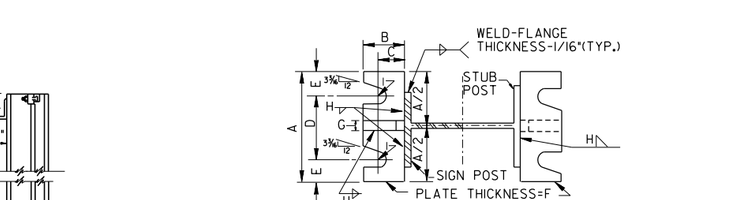

SECTION G-G SECTION H-H

(SEE TABLE FOR DIMENSIONS)

NOTE: SECTIONS SHOWN ARE FOR INSTALLATIONS ON RT. SHOULDER & IN GORE. PLATE SLOT BEVELS ARE OPPOSITE HAND FROM THAT SHOWN FOR INSTALLATION ON LT. SHOULDER.

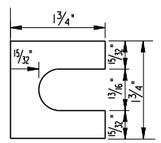

FURNISH 2, .012" ± THICK & 2, .032" ± THICK SHIMS PER POST. SHIMS SHALL BE FABRICATED FROM BRASS SHIM STOCK OR STRIP CONFORMING TO A.S.T.M.-B 36.

SHIM DETAIL

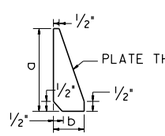

STIFFENER PLATE DETAIL

(SEE TABLE FOR DIMENSIONS)

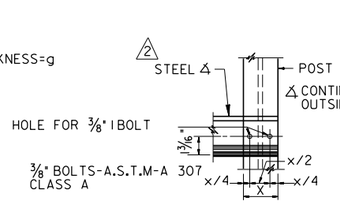

SECTION F-F

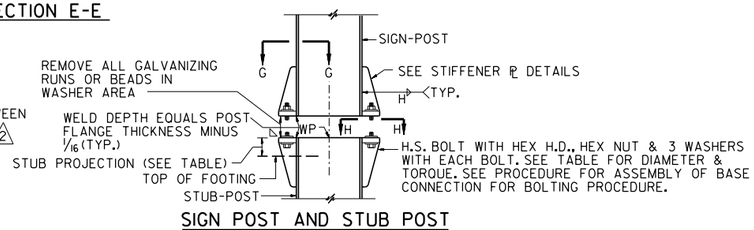

SIGN POST AND STUB POST ELEVATION FOR S AND W SHAPES 3

BY	REVISION	DATE
P.J.N.	REM. "G" FROM SIGN POST	07-01-26
R.M.J.	AND STUB POST DETAIL	10-28-81
H.W.C.	UPDATED BEAM SIZE	10- 7-77
H.W.C.	CH Z BARS TO 4'S & REV. NOTE	
H.W.C.	Z BAR DESIGNATION ADDED	3-10-71

DEPARTMENT OF TRANSPORTATION
STATE OF GEORGIA

STANDARD
ERECTION AND FOUNDATION DETAILS
FOR SPECIAL ROADSIDE SIGNS BREAKWAY TYPE POSTS

NOT TO SCALE | REDRAWN JULY 2024 | JULY 1970

DESIGNED HWC
DRAWN MGN
TRACED CCG
CHECKED HJL

(SUBMITTED) BRIDGE ENGINEER
(APPROVED) CHIEF ENGINEER

NUMBER 9054A

GDOT Georgia Department of Transportation | P. I. No. XXXXXXX

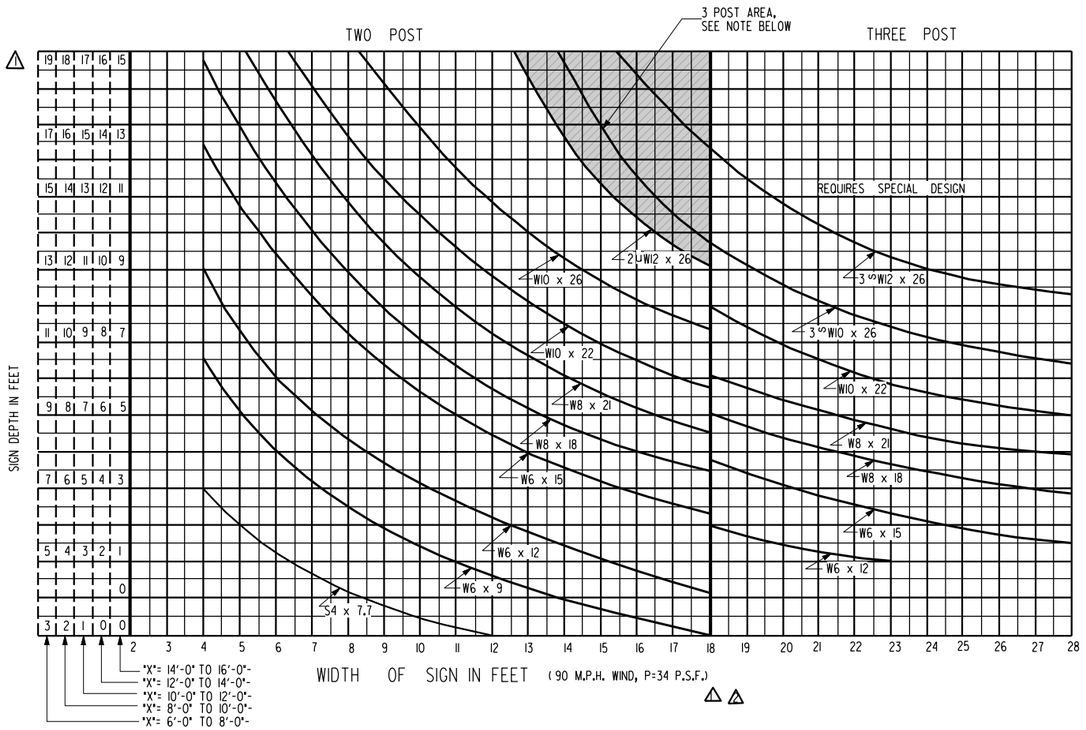

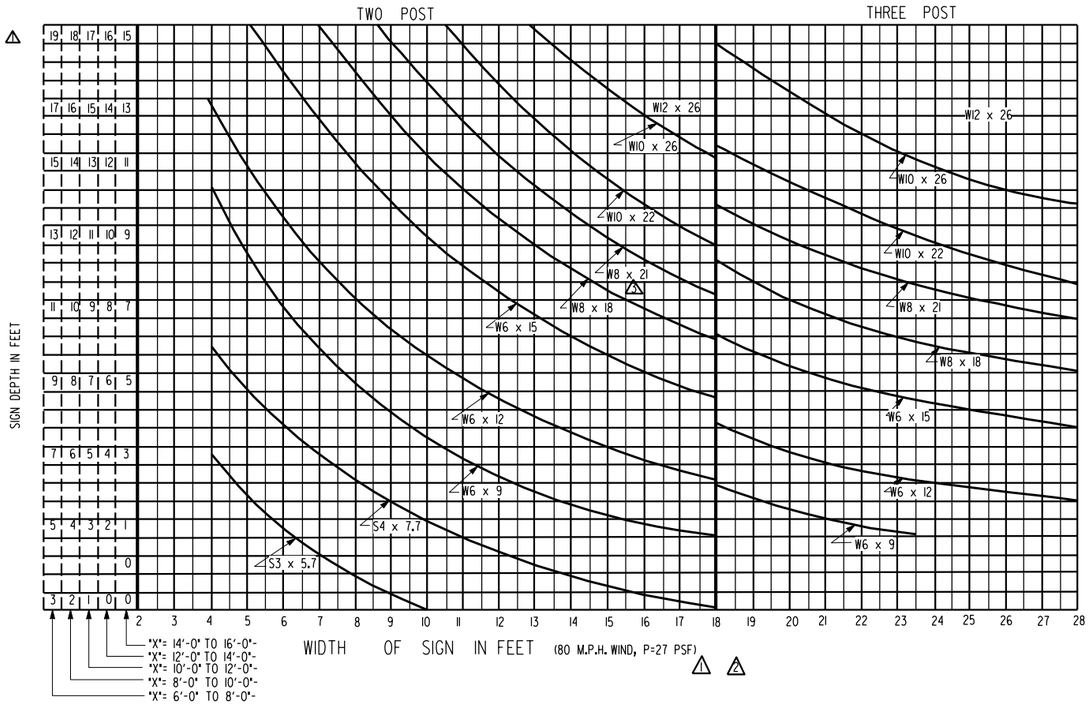

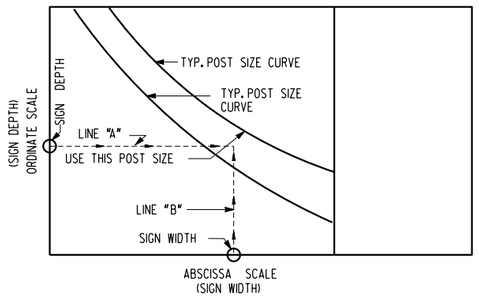

⚠ PROCEDURE TO FIND POST SIZE

1. DETERMINE SIGN WIDTH & DEPTH.
2. DETERMINE "X" DIMENSION USING GA. STD. NO 9054-A
3. DETERMINE PROPER "X" COLUMN & READ UP ORDINATE SCALE UNTIL REACHING CORRECT SIGN DEPTH (STEP 1) IN THAT COLUMN. TURN 90° TO ORDINATE SCALE & PROJECT A LINE PARALLEL TO THE ABSCISSA SCALE (LINE "A").
4. READ ALONG ABSCISSA SCALE TO CORRECT SIGN WIDTH. TURN 90° TO ABSCISSA SCALE & PROJECT A LINE (LINE "B") TO INTERSECT LINE "A". THE * NO. OF POSTS SHALL BE DETERMINED BY WHICH AREA THE POINT FALLS WITHIN. THE * SIZE SHALL BE THAT OF THE LARGER OF THE TWO POST SIZE CURVES THE INTERSECT POINT FALLS BETWEEN.

* WHEN A SIGN FALLS WITHIN THE TWO POST SECTION OF THE CHART ABOVE THE 2 S W 12 x 26 CURVE, THAT SIGN SHALL REQUIRE THREE POSTS & SHALL BE PLOTTED TO ONE OF THE TWO LINES WHICH HAVE BEEN EXTENDED FROM THE THREE POST SECTION.

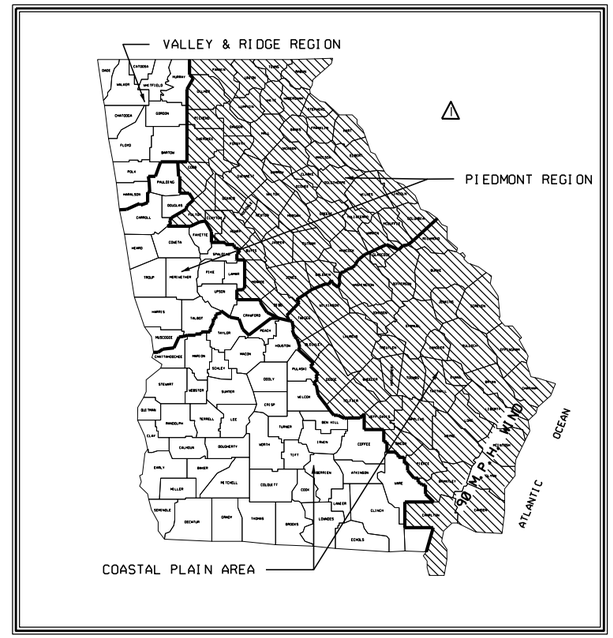

USE 80 M.P.H. WIND EXCEPT WHERE INDICATED BY HATCHED AREA.

R.M.U.	COR. 2 P. TO 8 x 21 FOR 80 MPH	3-26-87
R.M.U.	UPDATE BEAM SIZE	10-28-81
H.W.C.	GENERAL REVISION	10-7-77
BY	REVISION	DATE

DEPARTMENT OF TRANSPORTATION
STATE OF GEORGIA

STANDARD ERECTION AND FOUNDATION DETAILS FOR SPECIAL ROADSIDE SIGNS BREAKAWAY TYPE POSTS

NOT TO SCALE REDRAWN JULY 2024 JULY 1970

DESIGNED HWC
DRAWN MGN
TRACED CCG
CHECKED HJL

(SUBMITTED) R. L. Chapman, Jr. BRIDGE ENGINEER
(APPROVED) J. O. Bacon STATE HIGHWAY ENGINEER

NUMBER 9054B

GDOT Georgia Department of Transportation | P. I. No. XXXXXXX

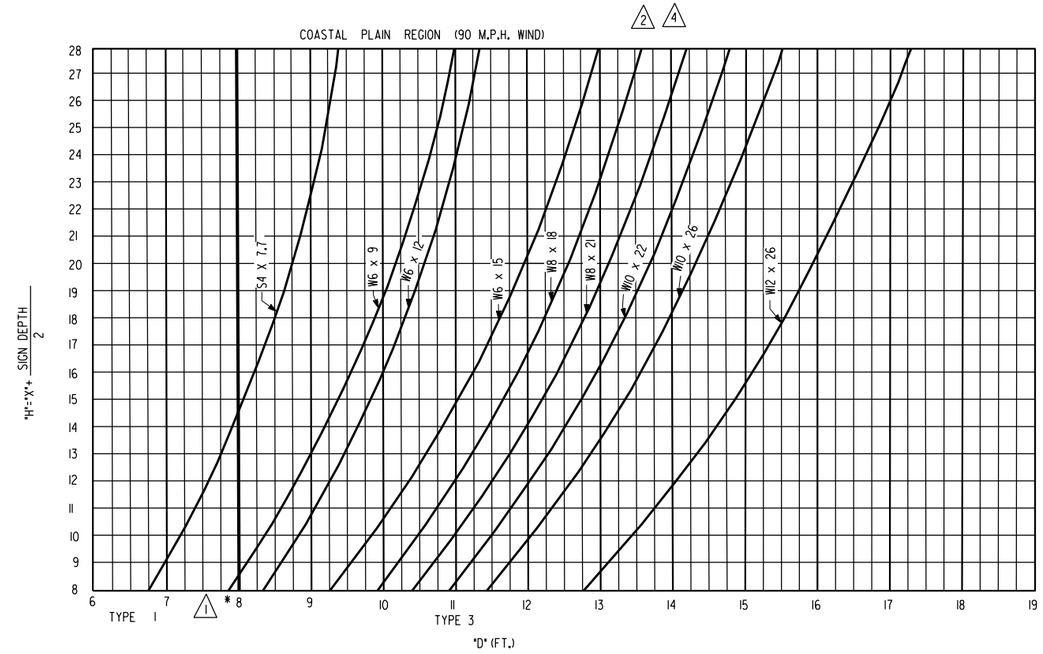

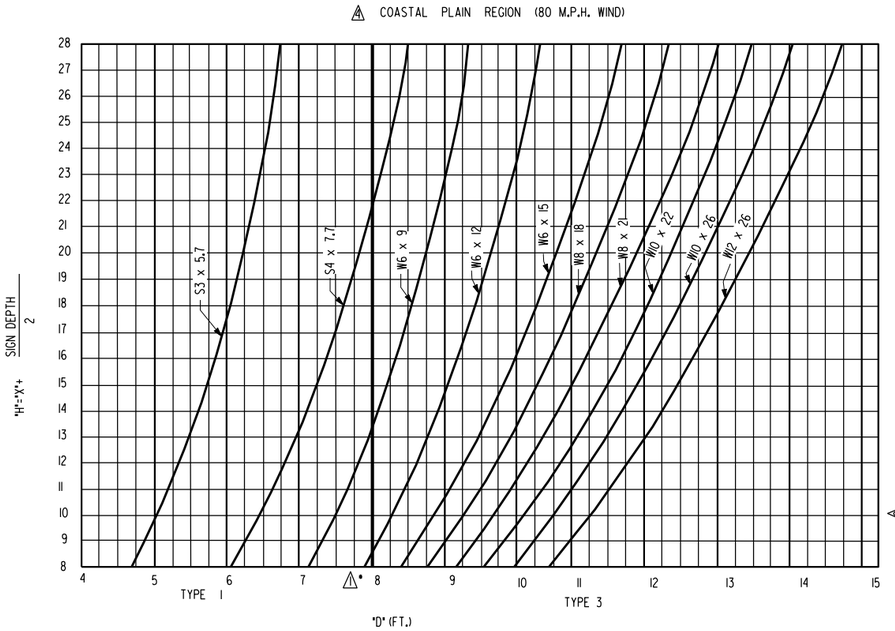

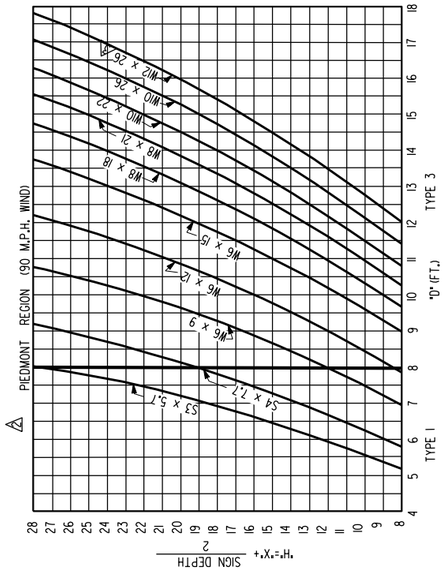

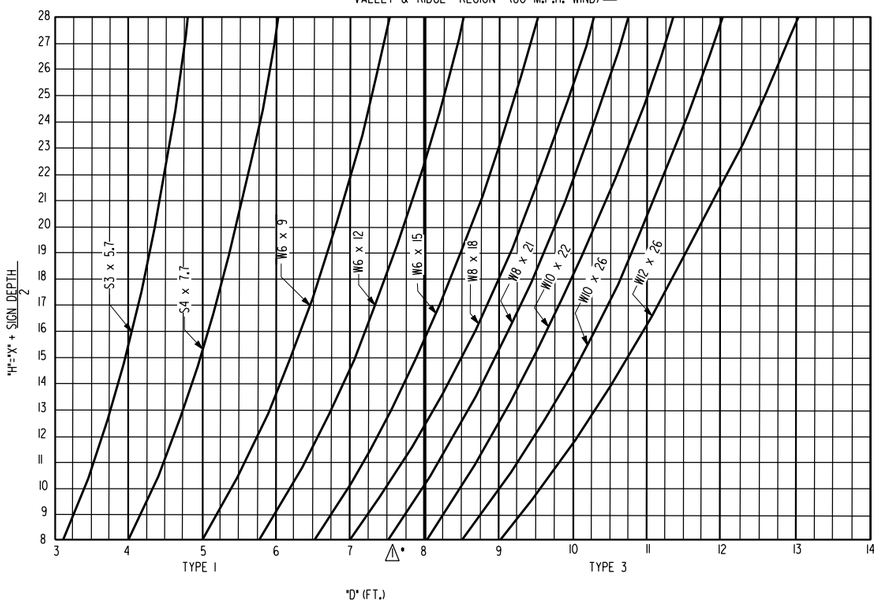

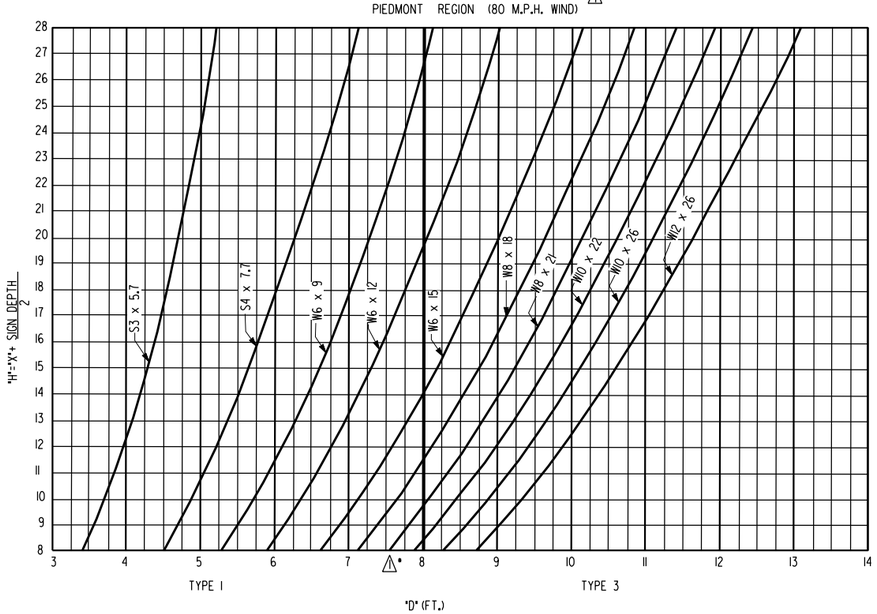

PROCEDURE TO FIND FOOTING DEPTH

1. DETERMINE REGION SIGN IS LOCATED IN FROM GA. STD. NO. 9054-B.
2. DETERMINE "H" ("H"-"X" +½ SIGN DEPTH) USING GA. STD. NO. 9054-A.
3. DETERMINE POST SIZE FROM GA. STD. NO. 9054-B.
4. ON PROPER CHART (STEP 1) READ UP ORDINATE SCALE TO PROPER "H" (STEP 2). THEN READ ACROSS ABSCISSA SCALE TO CORRECT POST SIZE. "D" (FOOTING DEPTH) CAN BE READ FROM ABSCISSA SCALE DIRECTLY BELOW INTERSECTION OF POST SIZE LINE & "H" ORDINATE.
1 * 5. FOR FOOTING DEPTHS BELOW 8', USE TYPE 1 FOOTING, FOR FOOTING DEPTHS 8' & ABOVE, USE TYPE 3 FOOTING.
1 6. FOOTING DEPTH "D" SHALL BE READ TO THE NEXT HIGHER 3 INCH INCREMENT, WHEN "D" FALLS BETWEEN 3 INCH INCREMENTS.

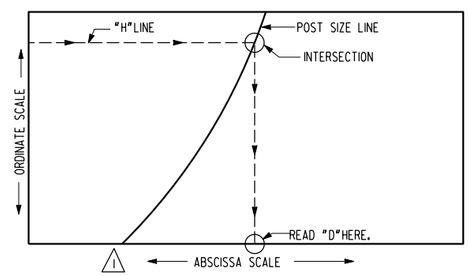

EXAMPLE

BY	DATE	REVISION
R.M.J.	10-28-81	UPDATED BEAM SIZE
R.M.J.	11-29-77	CORR. PIED. REG. CHART
H.W.C.	10- 7-77	ADDED TABLE & REV. WIND
H.W.C.		NOTE REMOVED & NOTE 4
	10-14-70	* ADDED

DEPARTMENT OF TRANSPORTATION
STATE OF GEORGIA

STANDARD ERECTION AND FOUNDATION DETAILS FOR SPECIAL ROADSIDE SIGNS BREAKAWAY TYPE POSTS

NO SCALE — JULY 1970

DESIGNED HWC
DRAWN MGN
TRACED CCG
CHECKED HJL

(SUBMITTED) R. L. Chapman, Jr. BRIDGE ENGINEER
(APPROVED) J. C. Bacon STATE HIGHWAY ENGINEER

NUMBER 9054C

GDOT Georgia Department of Transportation | P. I. No. XXXXXXX

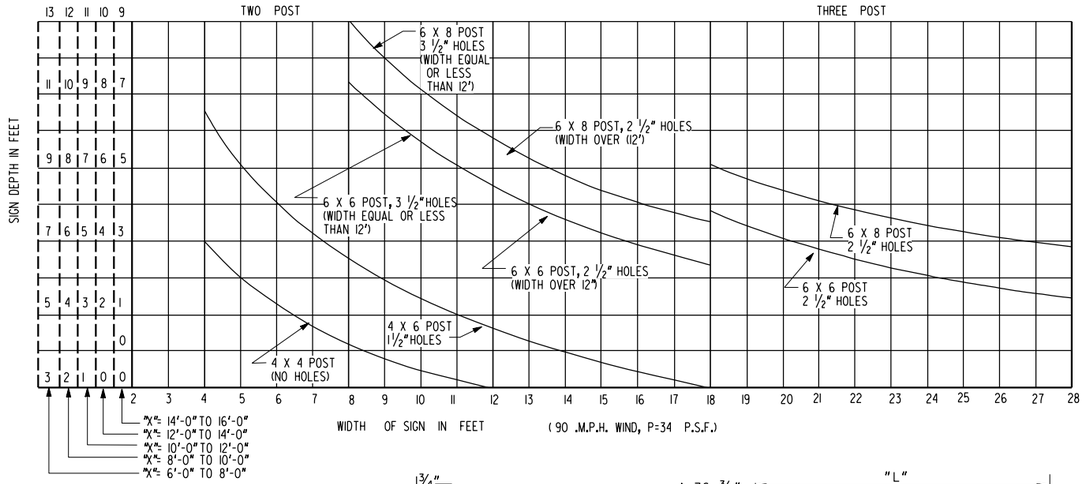

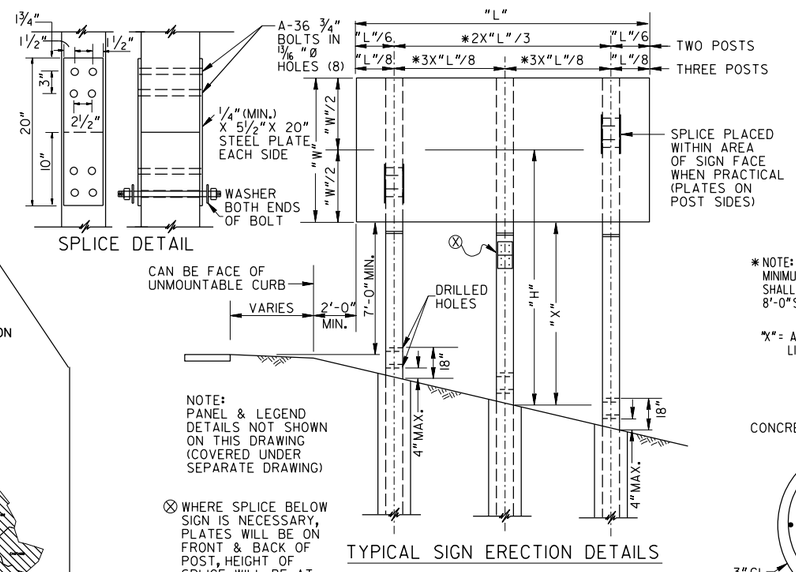

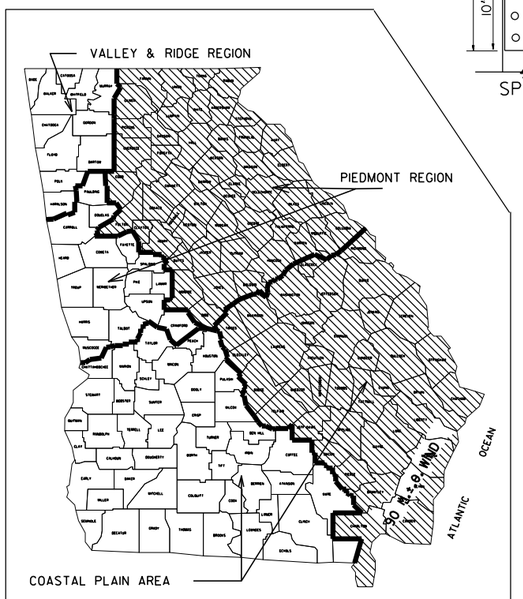

USE 80 M.P.H. WIND EXCEPT WHERE INDICATED BY HATCHED AREA.

PROCEDURE TO FIND POST SIZE

1. DETERMINE SIGN WIDTH AND DEPTH.
2. DETERMINE "X" DIMENSION USING TYPICAL SIGN ERECTION DETAIL.
3. DETERMINE PROPER "X" COLUMN & READ UP ORDINATE SCALE UNTIL REACHING CORRECT SIGN DEPTH (STEP 1). IN THAT COLUMN TURN 90° TO ORDINATE SCALE AND PROJECT A LINE PARALLEL TO THE ABSCISSA SCALE (LINE "A").
4. READ ALONG ABSCISSA SCALE TO CORRECT SIGN WIDTH, TURN 90° TO ABSCISSA SCALE AND PROJECT A LINE (LINE "B") TO INTERSECT LINE "A". THE NUMBER OF POSTS SHALL BE DETERMINED BY WHICH AREA THE POINT FALLS WITHIN. THE SIZE SHALL BE THAT OF THE LARGER OF THE TWO POST SIZE CURVES THE INTERSECT POINT FALLS BETWEEN.

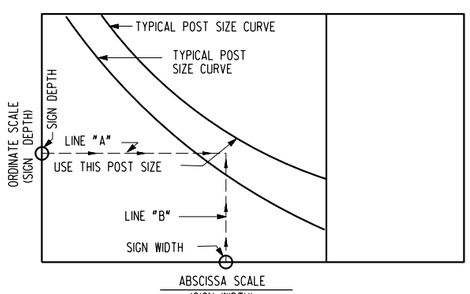

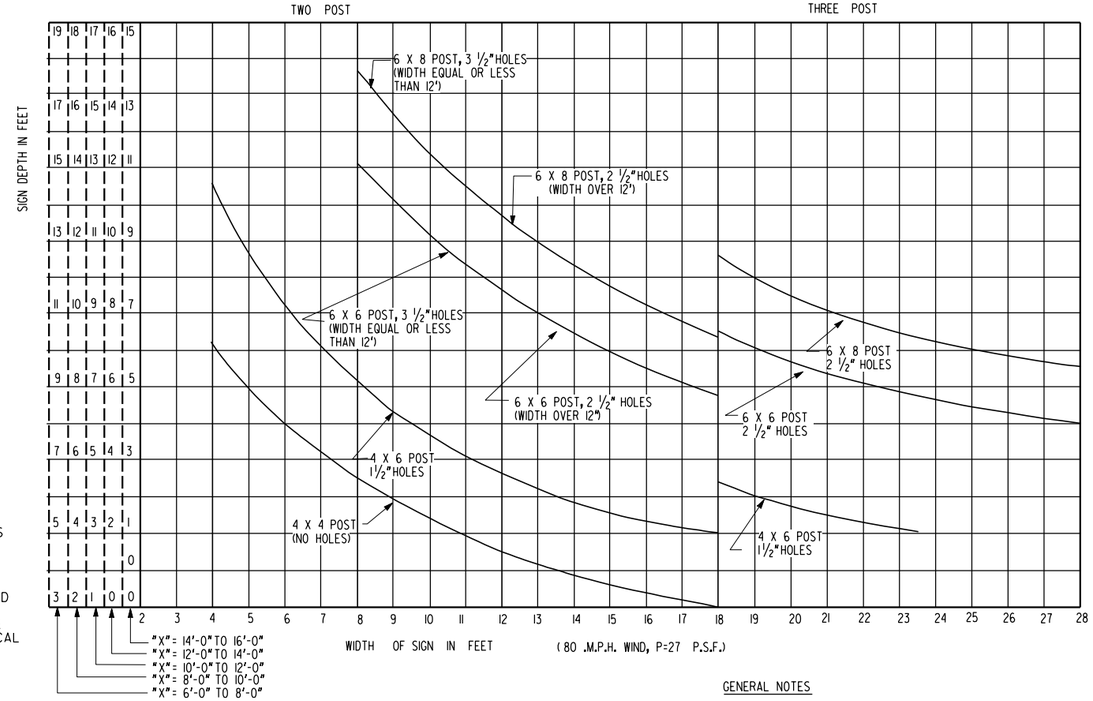

✱NOTE:
MINIMUM POST SPACING FOR 6 X 6 AND 6 X 8 POST SHALL BE 8'-0"(VARY L/6, L/8 DIMENSIONS TO MAINTAIN 8'-0"SPACING.)

"X"= AVERAGE HEIGHT FROM GROUND LINE TO BOTTOM OF SIGN.

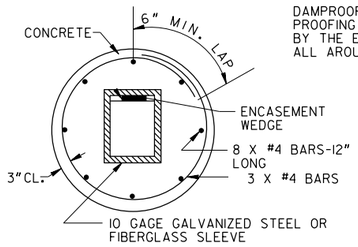

FOOTING SIZE				
POST	4X4 ✱✱	4X6 ✱✱	6X6 ✱✱	6X8 ✱✱
"C"	1'-6"	2'-0"	2'-0"	2'-0"
"D"	4'-0"	5'-0"	6'-6"	8'-0"
"C"	1'-0"	1'-6"	——	——
"D"	5'-0"	6'-0"	——	——

FOOTING FOR 4 X 4 POST MAY BE EITHER 1'-6"Ø X 4'-0"DEEP, OR 1'-0"Ø X 5'-0" DEEP.

FOOTING FOR 4 X 6 POST MAY BE EITHER 2'-0"Ø X 5'-0"DEEP, OR 1'-6"Ø X 6'-0"DEEP.

NOTE: IF ROCK IS ENCOUNTERED, SOCKET FOOTING 2 FEET INTO ROCK, "C"MAY BE REDUCED TO POST SIZE + 3".

✱✱ NOMINAL DIMENSIONS

DIRECTION OF TRAFFIC

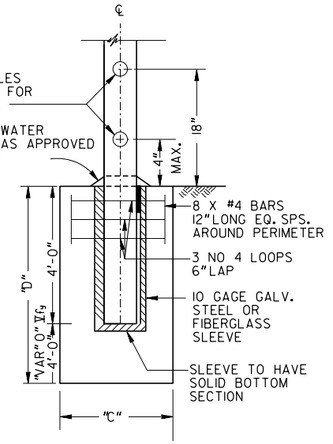

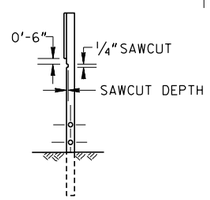

NOMINAL POST SIZE	INSIDE DIMENSIONS OF SLEEVE	SAWCUT DEPTH
4 X 4	4"X 4"	NOT REQ'D
4 X 6	4"X 6"	1½"
6 X 6	6"X 6"	1½"
6 X 8	6"X 8"	2½"

GENERAL NOTES

1. SPECIFICATIONS: GEORGIA STANDARDS AND/OR SPECIAL PROVISIONS.
2. ALL CONCRETE SHALL BE CLASS "A".
3. POST MUST BE PLUMB AND LOCATED AS SPECIFIED.
4. PLACE GREATER DIMENSION OF POST IN DIRECTION OF TRAFFIC.
5. SIGN FACE SHALL BE ORIENTED TO AVOID SPECULAR REFLECTION ORDINARILY BY A SLIGHT TURNING AWAY FROM THE ROADWAY OF APPROXIMATELY 3 DEGREES. CARE SHALL BE TAKEN TO KEEP THE ADJUSTMENT SMALL SO AS TO MAINTAIN ADEQUATE REFLECTIVE VALUES.
6. OTHER REQUIREMENTS - FOR GENERAL NOTE AND CONTRACT REQUIREMENT, SEE SPECIAL PLANS, SUPPLEMENTAL SPECS. AND SPECIAL PROVISIONS.
7. POST SHALL BE SHIMMED TO PROVIDE A TIGHT FIT WITH THE STEEL SLEEVE, USE A TAPERED, TREATED HARDWOOD WEDGE.
8. 4"X 4" OR 4"X 6"POSTS SHALL BE S.P.I.B. GRADE ISR STRESS RATED TIMBER 1500 P.S.I. IN BENDING. LARGER SIZES SHALL BE S.P.I.B. GRADE 2SR STRESS RATED TIMBER 1100 P.S.I. IN BENDING. DIMENSIONS ARE NOMINAL.
9. POSTS SHALL BE TREATED WITH PENTA-CHOLO-PHENOL OR CHROMATED COPPER ARSENATE (CCA) IN ACCORDANCE SECTION 863 OF THE STANDARD SPECIFICATIONS. ALL POSTS WITHIN THE BOUNDS OF A PROJECT SHALL BE OF THE SAME TREATMENT. POST SHALL BE DRESSED ON 4 SIDES.
10. FIBERGLASS SLEEVE SHALL BE 4 LAYERS: 2 LAYERS 1½"OZ/FT² FIBER-GLASS FOLLOWED BY ONE LAYER OF 2 MIL. CORE MAT'L. & 1 LAYER OF 1½"OZ/FT² OF FIBERGLASS TO BE PRODUCED WITH 33-031 ROSIN, WALL THICKNESS= ¼"± 1/16". SIDES WILL BE ⅛"TO ⅜"OFFSET TO CORNERS & CORNERS SQUARED TO 1/16".

BY	REVISION	DATE
R.M.U.	POST HOLE SIZES REV.	6-27-83
R.M.U.	ADD. NOTE #10 & SPLICE DET	4-19-82
R.M.U.	REV. NOTE #8	5-1-81

DEPARTMENT OF TRANSPORTATION
STATE OF GEORGIA

STANDARD
ERECTION AND FOUNDATION DETAILS FOR SPECIAL ROADSIDE SIGNS BREAKAWAY TYPE POSTS (WOOD)

(TO BE USED ONLY WHERE SPECIFIED)

NOT TO SCALE — REDRAWN JULY 2024 — SEPT. 1980

DES. H.W.C.
DRW. M.A.W.
TRA. G.M.E.
CHK. R.M.U.
W.J.O.

(SUBMITTED) STATE BRIDGE & STRUCTURAL DESN. ENGR.
(APPROVED) Thomas R. Moreland II STATE HIGHWAY ENGINEER

NUMBER 9055

STATE	PROJECT NUMBER	SHEET NO.	TOTAL SHEETS
GA.			

TEMPORARY RAISED PAVEMENT MARKER DETAIL

INSTALLATION PATTERN FOR LATERAL MAINLINE SHIFTS AND CROSSOVER OPERATIONS. ALSO APPLICABLE FOR DETOURS (AND BY-PASSES).

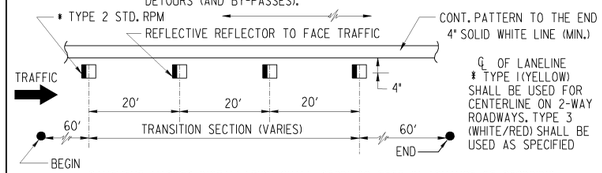

PAVEMENT MARKER INSTALLATION SHALL BEGIN 60 FEET IN ADVANCE OF BEGINNING OF THE SHIFT OR TRANSITION ALIGNMENT, CONTINUE THRU THE TRANSITION AREA, & EXTEND 60 FEET BEYOND THE INTERSECTION WITH THE TEMPORARY ALIGNMENT. TEMPORARY RAISED PAVEMENT MARKERS SHALL BE INSTALLED IN ACCORDANCE WITH THE MANUFACTURERS RECOMMENDATIONS AND THE GA. STD. SPECIFICATIONS.

STANDARD LEGEND

- STRIPED DRUM
- TYPE III BARRICADES
- SPECIAL BARRICADE WITH BI-DIRECTIONAL, TYPE "C" STEADY BURNING LIGHT OR HIGHWAY SIGN AS SPECIFIED (SEE DETAIL)
- SEQUENTIAL OR FLASHING ARROW
- PORTABLE CHANGEABLE MESSAGE SIGN
- PERMANENT TYPE POST MOUNTED SIGN
- TEMPORARY POST MOUNTED SIGN
- PORTABLE MOUNTED SIGN - FLAGS NOT REQUIRED
- WORK AREA
- TRAFFIC CONE - 28" MIN. - (DAYTIME USE ONLY)
- FLAGGER WITH STOP-SLOW PADDLE
- TRAFFIC IMPACT ATTENUATOR (CRASH CUSHION)
- TYPE I CLEAR (WHITE) DELINEATOR - SINGLE FACE
- TYPE I YELLOW DELINEATOR - SINGLE FACE
- TYPE I CLEAR (WHITE) DELINEATOR DOUBLE FACE
- TYPE I YELLOW DELINEATOR DOUBLE FACE

GENERAL NOTES :

1. ALL TRAFFIC CONTROL DEVICES SHALL BE MADE AND ERECTED IN ACCORDANCE WITH THE DETAILS SHOWN ON THE PLANS; THE MUTCD; THE GEORGIA STANDARD SPECIFICATIONS, AND/OR SPECIAL PROVISIONS. (SEE SECTION 150)
2. ALL TRAFFIC CONTROL DEVICES SHALL BE AS SHOWN, OR AS DIRECTED BY THE ENGINEER. ADDITIONAL DEVICES MAY BE REQUIRED AS DIRECTED BY THE ENGINEER.
3. ALL PORTABLE SIGNS SHALL BE MOUNTED A MINIMUM OF IFOOT ABOVE THE LEVEL OF PAVEMENT EDGE FOR DIRECTIONAL TRAFFIC OF TWO (2) LANES OR LESS AND A MINIMUM OF 7 FEET FOR DIRECTIONAL OF THREE (3) OR MORE LANES. ALL PORTABLE SIGNS AND SIGN MOUNTING DEVICES UTILIZED IN THE WORK SHALL BE NCHRP 350 COMPLIANT. PORTABLE SIGNS MAY BE USED WHEN THE DURATION OF THE WORK IS LESS THAN 3 DAYS.
4. WHEN THE CONSTRUCTION AREA HAS ENTRANCE/EXIT RAMPS OR INTERSECTIONS, WORK WILL BE PERFORMED IN SUCH A MANNER TO PERMIT TRAFFIC TO OPERATE WITH THE LEAST AMOUNT OF INCONVENIENCE AS POSSIBLE. ADDITIONAL CHANNELIZATION AND SIGNING SHALL BE INSTALLED, AS REQUIRED, TO ALLOW TRAFFIC TO REMAIN AS OPERATIONAL AS POSSIBLE. WHEN ENTRANCE RAMPS/INTERSECTIONS ARE INOPERABLE, FLAGGERS WILL BE UTILIZED TO CONTROL AND PROHIBIT MOVEMENT INTO THE PROJECT AT THAT POINT UNTIL CONSTRUCTION HAS CLEARED THE RESTRICTION SUFFICIENT TO RETURN TO OPERATIONAL STATUS.
5. FOR NIGHT TIME OPERATIONS, DRUMS SHALL HAVE, FOR THE LENGTH OF THE TAPER ONLY, A SIX (6") INCH ORANGE REFLECTIZED TOP STRIPE ON EACH DRUM IN THE TAPER AS REQUIRED IN SECTION 150. SPACING OF DEVICES SHALL BE AS SHOWN. DURING DAYLIGHT HOURS, CONES (28" MIN.) MAY BE USED IN ADVANCE OF AND THROUGHOUT WORK AREA.
6. SIGN LOCATIONS ARE APPROXIMATE AND MAY BE ADJUSTED TO MEET FIELD CONDITIONS BUT MUST BE WITHIN THE LIMITATIONS SET FORTH IN THE MUTCD.
7. A PORTABLE SELF-SUSTAINED SEQUENTIAL OR FLASHING ARROW SIGN SHALL BE USED AT THE BEGINNING OF EACH LANE CLOSURE ON MULTI-LANE HIGHWAYS. ARROW PANELS SHALL NOT BE USED ON TWO-LANE TWO-WAY HIGHWAYS EXCEPT IN CAUTION MODE.
8. WHEN NOT IN USE, PORTABLE SIGNS SHALL BE REMOVED FROM THE TRAVELWAY SO THAT THE MESSAGE IS NOT VISIBLE TO THE MOTORIST. INTERIM SIGNS THAT ARE PERMANENTLY MOUNTED SHALL BE COVERED WHEN NOT APPLICABLE. SEE SECTION 150.
9. PROJECT SIGNS W20-1, G20-1 & G20-2 FOR THIS PROJECT SHALL BE COORDINATED WITH ADJACENT CONSTRUCTION PROJECTS. ONLY ONE SET OF SIGNS IS REQUIRED IN EACH DIRECTION FOR THE TOTAL LENGTH OF ALL PROJECTS- AT THE BEGINNING OF THE FIRST PROJECT AND AT THE ENDING OF THE LAST PROJECT. ADVANCE CONSTRUCTION SIGNS ARE NOT REQUIRED ON INTERMEDIATE PROJECTS, UNLESS CONSTRUCTION ON THE ADJACENT PROJECTS IS COMPLETED BEFOREHAND, THEN PROJECT CONSTRUCTION SIGNS WILL BE ADDED AS NECESSARY.
10. ALL THE COST OF THE MATERIALS, LABOR AND EQUIPMENT NECESSARY TO COMPLETE THE WORK SHALL BE INCLUDED IN THE PRICE BID FOR TRAFFIC CONTROL SECTION 150, LUMP SUM, WHEN SHOWN AS A PAYMENT ITEM IN THE PROPOSAL. OTHERWISE, ALL THE COST WILL BE INCLUDED IN THE OVER-ALL BID SUBMITTED. EXCEPT ON CERTAIN PROJECTS SOME ITEMS MAY BE PAID FOR SEPARATELY BY THE UNIT WHEN SPECIFIED ON THE PLANS AND IN THE PROPOSAL.
11. FOR FREEWAY CONSTRUCTION THE CONTRACTOR SHALL ARRANGE HIS WORK SO THAT THERE IS AN EXIT GORE SIGN AND AN EXIT DIRECTION SIGN IN PLACE FOR ALL EXIT RAMPS AT ALL TIMES.
12. ALL CROSSROADS, SIDEROADS, RAMPS OR OTHER ENTRANCES TO MAINLINE CONSTRUCTION SHALL REQUIRE W20-1 SIGNS LOCATED AS SHOWN IN THE PLANS, OR AS DIRECTED BY THE ENGINEER.
13. MARKINGS AND/OR SIGNS IN CONFLICT WITH INTERIM TRAFFIC CONTROL SHALL BE REMOVED, RELOCATED OR COVERED; APPLICABLE EXISTING AND INTERIM MARKINGS AND/OR SIGNING SHALL BE MAINTAINED PER SECTION 150.
14. ANY CHANNELIZING DEVICES (DRUMS OR BARRICADES) IN CONFLICT WITH CONCRETE BARRIERS SHALL BE OMITTED.
15. CONTRACTOR SHALL PROVIDE THE NECESSARY TRAFFIC CONTROL DURING THE TIE-IN OPERATION.
16. THE TRAFFIC CONTROL DEVICES SHOWN FOR ANY STAGE CONSTRUCTION SHALL REMAIN IN PLACE AND BE UTILIZED SO LONG AS NECESSARY FOR THE FOLLOWING STAGES AND SHALL BE REMOVED IMMEDIATELY WHEN NO LONGER REQUIRED. THE DEVICES MAY OR MAY NOT BE SHOWN ON THE PLANS FOR THESE FOLLOWING STAGES, REFER TO THE PLAN SHEET FOR THE INITIAL STAGE FOR THESE TRAFFIC CONTROLS.
17. EXISTING GUIDE SIGNS SHALL REMAIN IN PLACE SO LONG AS THEY DO NOT CONFLICT WITH THE CONSTRUCTION OF THIS PROJECT. WHEN IN CONFLICT, THEY SHALL BE RELOCATED ON TEMPORARY POSTS AT THE LOCATION AS DIRECTED BY THE ENGINEER. ANY DISTANCE SHOWN ON THE SIGN SHALL BE ADJUSTED ACCORDINGLY. IF THE SIGNS CANNOT BE RELOCATED, THEN THE SIGN SHALL BE REMOVED AND STORED AT A PLACE DESIGNATED BY THE ENGINEER, IF NEITHER OF THE ABOVE CAN BE DONE, THEN THE CONTRACTOR SHALL PROVIDE INTERIM GUIDE SIGNS AS COVERED IN SECTION 150.
18. (a) ON PROJECTS WITH LOW OR SOFT SHOULDERS, THE CONTRACTOR SHALL ERECT IMMEDIATELY AHEAD OF CONSTRUCTION OPERATIONS "LOW/SOFT SHOULDER" WARNING SIGNS AT THE PROJECT TERMINII, AT INTERVALS NOT TO EXCEED 1 MILE AND IMMEDIATELY PAST EACH CROSSROAD.

    (b) WHERE THE CONTRACTOR IS NOT RESPONSIBLE FOR SHOULDER CONSTRUCTION, THE DEPARTMENT WILL FURNISH THESE SIGNS FOR THE CONTRACTOR TO PICK UP, TRANSPORT, AND ERECT. THE DEPARTMENT WILL LATER REMOVE AND RETAIN THE SIGNS.

DATE	REVISION	BY
3-30-06	REVISED GENERAL NOTES AND LEGEND. DELETED TWO DETAILS.	GLO
4-24-01	SPEC. BAR. SH. SPEC.	

DEPARTMENT OF TRANSPORTATION
STATE OF GEORGIA

STANDARD

TRAFFIC CONTROL GENERAL NOTES, STANDARD LEGEND, MISCELLANEOUS DETAILS

NO SCALE — AUG., 1999

DES. ____
DRW. ____
TRA. ____
CHK. ____

(SUBMITTED) _____ STATE ROAD & AIRPORT DESIGN ENGINEER

(APPROVED) _____ CHIEF ENGINEER

NUMBER 9100

STATE	PROJECT NUMBER	SHEET NO.	TOTAL SHEETS
GA.			

GENERAL NOTES:

1. ALL TRAFFIC CONTROL DEVICES SHALL BE MADE AND ERECTED IN ACCORDANCE WITH THE DETAILS SHOWN ON THE PLANS; THE MUTCD; THE GEORGIA STANDARD SPECIFICATIONS, AND/OR SPECIAL PROVISIONS. (SEE SECTION 150)
2. ALL TRAFFIC CONTROL DEVICES SHALL BE AS SHOWN, OR AS DIRECTED BY THE ENGINEER. ADDITIONAL DEVICES MAY BE REQUIRED AS DIRECTED BY THE ENGINEER.
3. ALL PORTABLE SIGNS SHALL BE MOUNTED A MINIMUM OF 1FOOT ABOVE THE LEVEL OF PAVEMENT EDGE FOR DIRECTIONAL TRAFFIC OF TWO (2) LANES OR LESS AND A MINIMUM OF 7 FEET FOR DIRECTIONAL OF THREE (3) OR MORE LANES. ALL PORTABLE SIGNS AND SIGN MOUNTING DEVICES UTILIZED IN THE WORK SHALL BE NCHRP 350 COMPLIANT. PORTABLE SIGNS MAY BE USED WHEN THE DURATION OF THE WORK IS LESS THAN 3 DAYS.
4. WHEN THE CONSTRUCTION AREA HAS ENTRANCE/EXIT RAMPS OR INTERSECTIONS, WORK WILL BE PERFORMED IN SUCH A MANNER TO PERMIT TRAFFIC TO OPERATE WITH THE LEAST AMOUNT OF INCONVENIENCE AS POSSIBLE. ADDITIONAL CHANNELIZATION AND SIGNING SHALL BE INSTALLED, AS REQUIRED, TO ALLOW TRAFFIC TO REMAIN AS OPERATIONAL AS POSSIBLE. WHEN ENTRANCE RAMPS/INTERSECTIONS ARE INOPERABLE, FLAGGERS WILL BE UTILIZED TO CONTROL AND PROHIBIT MOVEMENT INTO THE PROJECT AT THAT POINT UNTIL CONSTRUCTION HAS CLEARED THE RESTRICTION SUFFICIENT TO RETURN TO OPERATIONAL STATUS.
5. FOR NIGHT TIME OPERATIONS, DRUMS SHALL HAVE, FOR THE LENGTH OF THE TAPER ONLY, A SIX (6") INCH ORANGE REFLECTIZED TOP STRIPE ON EACH DRUM IN THE TAPER AS REQUIRED IN SECTION 150. SPACING OF DEVICES SHALL BE AS SHOWN. DURING DAYLIGHT HOURS, CONES (28" MIN.) MAY BE USED IN ADVANCE OF AND THROUGHOUT WORK AREA.
6. SIGNS SHOWN HERE ARE IN ADDITION TO ALL ADVANCE WARNING SIGNS REQUIRED IN SECTION 150.
7. FLAGGERS SHALL BE PROVIDED AS NECESSARY TO PROHIBIT WRONG DIRECTION OF TRAFFIC THRU WORK AREAS.
8. WHEN NOT IN USE, PORTABLE SIGNS SHALL BE REMOVED FROM THE TRAVELWAY SO THAT THE MESSAGE IS NOT VISIBLE TO THE MOTORIST. INTERIM SIGNS THAT ARE PERMANENT MOUNTED SHALL BE COVERED WHEN NOT APPLICABLE. SEE SECTION 150.
9. PAYMENT FOR TRAFFIC CONTROL SHALL BE PER SECTION 150.
10. PAVEMENT MARKINGS FOR TEMPORARY TRAFFIC CONTROL, IF REQUIRED, SHALL BE IN ACCORDANCE WITH SECTION 150 AND AS DIRECTED BY THE ENGINEER OR SHOWN IN THE PLANS.
11. (a) ON PROJECTS WITH LOW OR SOFT SHOULDERS, THE CONTRACTOR SHALL ERECT IMMEDIATELY AHEAD OF CONSTRUCTION OPERATIONS "LOW/SOFT SHOULDER" WARNING SIGNS AT THE PROJECT TERMINI, AT INTERVALS NOT TO EXCEED ONE MILE AND IMMEDIATELY PAST EACH CROSSROAD.
    (b) WHERE THE CONTRACTOR IS NOT RESPONSIBLE FOR SHOULDER CONSTRUCTION THE DEPARTMENT WILL FURNISH THESE SIGNS FOR THE CONTRACTOR TO PICK-UP, TRANSPORT AND ERECT, THE DEPARTMENT WILL LATER REMOVE AND RETAIN THE SIGNS.
12. HIGHWAY WORK ZONE SIGNS (HWZ-2 AND HWZ-3) SHALL BE INSTALLED ON THE TRAVEL WAY AND THE INTERSECTING ROADWAY AS REQUIRED IN SECTION 150.

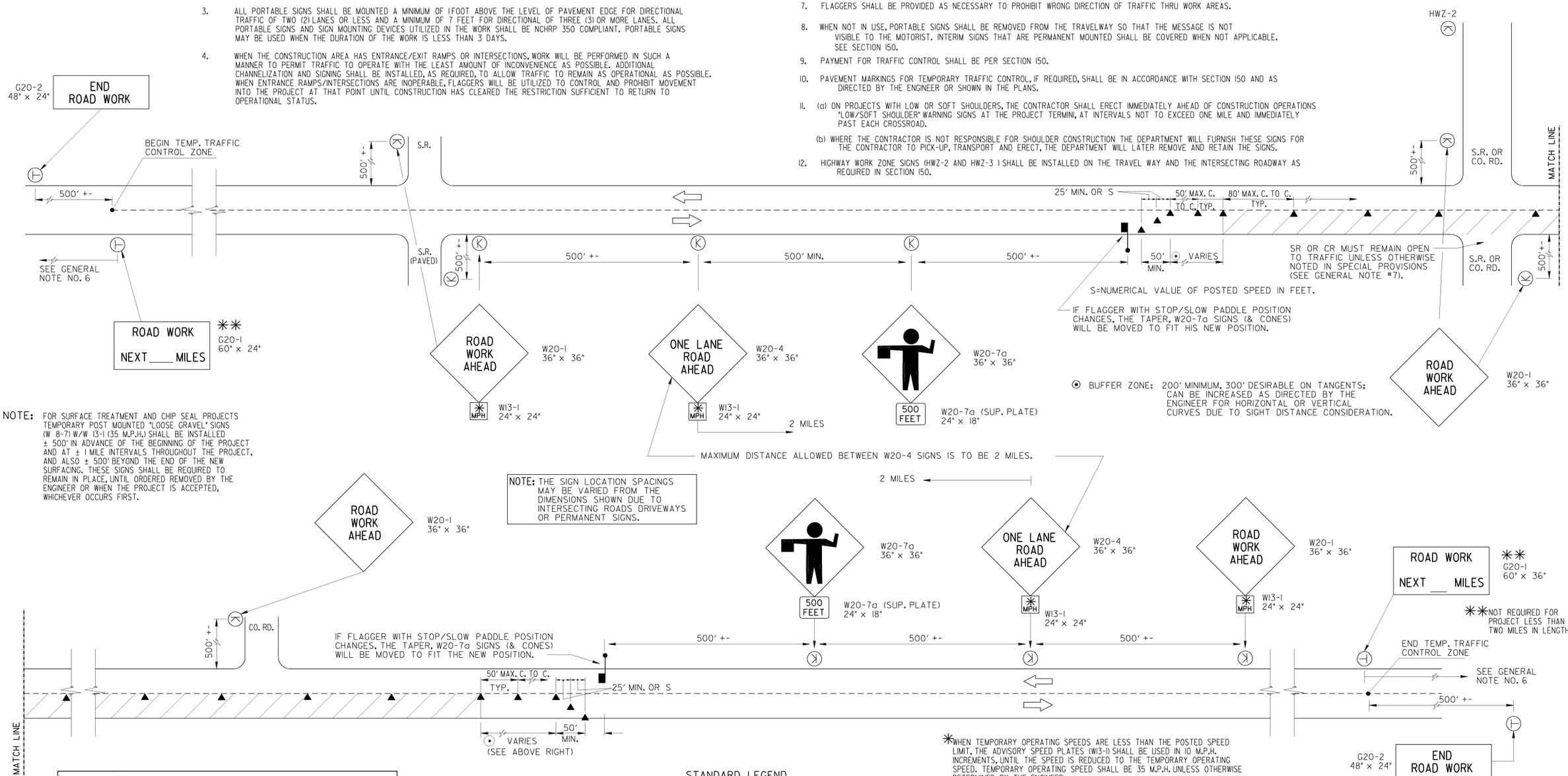

NOTE: FOR SURFACE TREATMENT AND CHIP SEAL PROJECTS TEMPORARY POST MOUNTED "LOOSE GRAVEL" SIGNS (W 8-7) W/W 13-1 (35 M.P.H.) SHALL BE INSTALLED ± 500' IN ADVANCE OF THE BEGINNING OF THE PROJECT AND AT ± 1 MILE INTERVALS THROUGHOUT THE PROJECT, AND ALSO ± 500' BEYOND THE END OF THE NEW SURFACING. THESE SIGNS SHALL BE REQUIRED TO REMAIN IN PLACE, UNTIL ORDERED REMOVED BY THE ENGINEER OR WHEN THE PROJECT IS ACCEPTED, WHICHEVER OCCURS FIRST.

DETAIL OF G20-4 SIGN For Pilot Vehicle
IF REQUIRED OR USED ON PROJECT

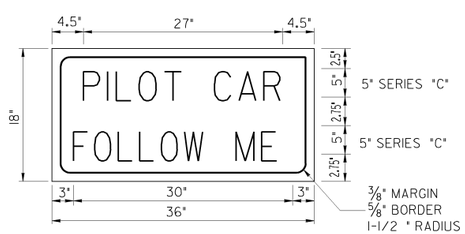

STANDARD LEGEND

- STRIPED DRUM
- PERMANENT TYPE POST MOUNTED SIGN (7' MOUNT HEIGHT)
- TEMPORARY POST MOUNTED SIGN - (7' MOUNT HEIGHT)
- PORTABLE MOUNTED SIGN - MINIMUM HEIGHT OF 1FT. ABOVE THE EDGE OF PAVEMENT; INSTALLED AS PER NCHRP 350 TESTING REQUIREMENTS.
- WORK AREA
- TRAFFIC CONE - 28" MIN. - DAYTIME USE ONLY
- FLAGGER WITH STOP-SLOW PADDLE

BY	REVISION	DATE
GLO	REMOVED FLAGS AND REV. GENERAL NOTES, REV. SIGN G20-2A TO G20-2.	3-30-06

DEPARTMENT OF TRANSPORTATION
STATE OF GEORGIA

STANDARD TRAFFIC CONTROL DETAIL
FOR LANE CLOSURE ON TWO-LANE HIGHWAY

NO SCALE — REV. & REDR. JULY, 1999

DES. ____ DRW. ____ TRA. ____ CHK. ____

(SUBMITTED) STATE ROAD & AIRPORT DESIGN ENGINEER

(APPROVED) CHIEF ENGINEER

NUMBER 9102

STATE	PROJECT NUMBER	SHEET NO.	TOTAL SHEETS
GA.			

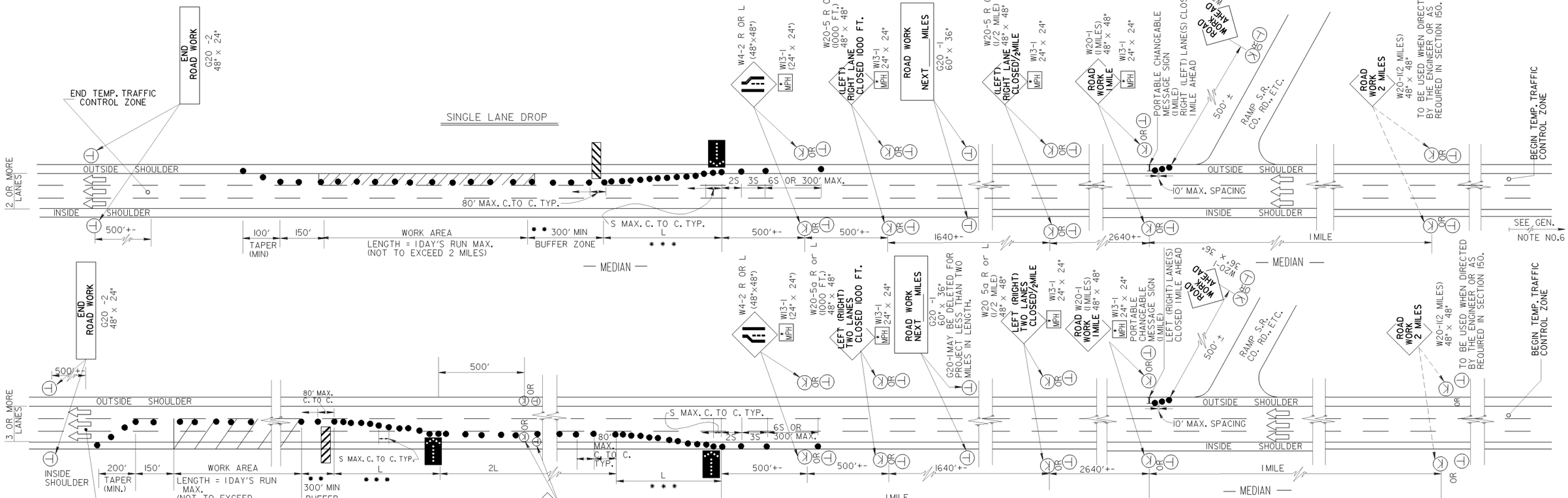

POSTED SPEED MPH PRIOR TO WORK	TYPICAL DIMENSIONS (FT.)				
	L (FOR 12' OFFSET)	S	2S	3S	6S or 300'MAX.
25	125	25	50	75	150
30	180	30	60	90	180
35	245	35	70	105	210
40	320	40	80	120	240
45	540	45	90	135	270
50	600	50	100	150	300
55	660	55	110	165	300
60	720	60	120	180	300
65	780	65	130	195	300

(SEE FORMULA FOR OTHER CONDITIONS)

STANDARD LEGEND

- ● STRIPED DRUM
- ▲ TRAFFIC CONE - 28" MIN. (DAYTIME USE ONLY)
- TYPE III BARRICADE (OPTIONAL)
- SEQUENTIAL OR FLASHING ARROW
- Ⓣ TEMPORARY POST MOUNTED SIGN (OFF SHOULDER) --FOR LONG TERM LANE CLOSURE SUCH AS STATIONARY OPERATIONS, BRIDGE WIDENING PROJECTS ETC. - (7' MOUNT HEIGHT)
- Ⓚ PORTABLE MOUNTED SIGN (ON SHOULDER) --FOR SHORT TERM LANE CLOSURE SUCH AS MOVING OPERATIONS, RESURFACING PROJECTS, ETC. (SEE GENERAL NOTE. NO. 3)
- WORK AREA
- PORTABLE CHANGEABLE MESSAGE SIGN

L=WS FOR SPEEDS OF 45 M.P.H. OR GREATER;
L= $WS^2/60$ FOR SPEEDS OF 40 M.P.H. OR LESS
WHERE:
L=MIN. LENGTH OF TAPER FOR LANE CLOSURE
S=POSTED SPEED
W=WIDTH OF OFFSET.

* * * TAPERS REQUIRE THE USE OF SIX (6") INCH TOP STRIPES. IF CONDITIONS EXIST INTO THE NIGHT. SEE GENERAL NOTES NO. 5.

* WHEN TEMPORARY OPERATING SPEEDS ARE LESS THAN THE POSTED SPEED LIMIT, THE ADVISORY SPEED PLATES (W13-1) SHALL BE USED IN 10 M.P.H. INCREMENTS, UNTIL THE SPEED IS REDUCED TO THE TEMPORARY OPERATING SPEED.

** BUFFER ZONES OF 300' MINIMUM, 500' DESIRABLE ARE REQUIRED FOR TANGENT SECTIONS AND SHALL BE INCREASED FOR HORIZONTAL OR VERTICAL CURVES DUE TO SIGHT DISTANCE CONSIDERATIONS.

GENERAL NOTES:

1. ALL TRAFFIC CONTROL DEVICES SHALL BE MADE AND ERECTED IN ACCORDANCE WITH THE DETAILS SHOWN ON THE PLANS; THE MUTCD; THE GEORGIA STANDARD SPECIFICATIONS, AND/OR SPECIAL PROVISIONS. (SEE SECTION 150)
2. ALL TRAFFIC CONTROL DEVICES SHALL BE AS SHOWN, OR AS DIRECTED BY THE ENGINEER. ADDITIONAL DEVICES MAY BE REQUIRED AS DIRECTED BY THE ENGINEER.
3. ALL PORTABLE SIGNS SHALL BE MOUNTED A MINIMUM OF 1FOOT ABOVE THE LEVEL OF PAVEMENT EDGE FOR DIRECTIONAL TRAFFIC OF TWO (2) LANES OR LESS AND A MINIMUM OF 7 FEET FOR DIRECTIONAL OF THREE (3) OR MORE LANES. ALL PORTABLE SIGNS AND SIGN MOUNTING DEVICES UTILIZED IN THE WORK SHALL BE NCHRP 350 COMPLIANT. PORTABLE SIGNS MAY BE USED WHEN THE DURATION OF THE WORK IS LESS THAN 3 DAYS.
4. WHEN THE CONSTRUCTION AREA HAS ENTRANCE/EXIT RAMPS OR INTERSECTIONS, WORK WILL BE PERFORMED IN SUCH A MANNER TO PERMIT TRAFFIC TO OPERATE WITH THE LEAST AMOUNT OF INCONVENIENCE AS POSSIBLE. ADDITIONAL CHANNELIZATION AND SIGNING SHALL BE INSTALLED, AS REQUIRED, TO ALLOW TRAFFIC TO REMAIN AS OPERATIONAL AS POSSIBLE. WHEN ENTRANCE RAMPS/INTERSECTIONS ARE INOPERABLE, FLAGGERS WILL BE UTILIZED TO CONTROL AND PROHIBIT MOVEMENT INTO THE PROJECT AT THAT POINT UNTIL CONSTRUCTION HAS CLEARED THE RESTRICTION SUFFICIENT TO RETURN TO OPERATIONAL STATUS.
5. FOR NIGHT TIME OPERATIONS, DRUMS SHALL HAVE, FOR THE LENGTH OF THE TAPER ONLY, A SIX (6") INCH ORANGE REFLECTIZED TOP STRIPE ON EACH DRUM IN THE TAPER AS REQUIRED IN SECTION 150. SPACING OF DEVICES SHALL BE AS SHOWN. DURING DAYLIGHT HOURS, CONES (28" MIN.) MAY BE USED IN ADVANCE OF AND THROUGHOUT WORK AREA.
6. SIGNS SHOWN HERE ARE IN ADDITION TO ALL ADVANCE WARNING SIGNS REQUIRED BY SECTION 150.
7. A PORTABLE SELF-SUSTAINED SEQUENTIAL OR FLASHING ARROW SIGN SHALL BE USED AT THE BEGINNING OF EACH LANE CLOSURE ON MULTI-LANE HIGHWAYS. ARROW PANELS SHALL NOT BE USED ON TWO-LANE TWO-WAY HIGHWAYS EXCEPT IN CAUTION MODE.
8. WHEN NOT IN USE, PORTABLE SIGNS SHALL BE REMOVED FROM THE TRAVELWAY SO THAT THE MESSAGE IS NOT VISIBLE TO THE MOTORIST. INTERIM SIGNS THAT ARE PERMANENT MOUNTED SHALL BE COVERED WHEN NOT APPLICABLE. SEE SECTION 150.
9. PAYMENT FOR TRAFFIC CONTROL SHALL BE PER SECTION 150.

GENERAL NOTES:

10. (a) ON PROJECTS WITH LOW OR SOFT SHOULDERS, THE CONTRACTOR SHALL ERECT IMMEDIATELY AHEAD OF CONSTRUCTION OPERATIONS "LOW/SOFT SHOULDER" WARNING SIGNS AT THE PROJECT TERMINII, AT INTERVALS NOT TO EXCEED ONE MILE AND IMMEDIATELY PAST EACH CROSSROAD.
    (b) WHERE THE CONTRACTOR IS NOT RESPONSIBLE FOR SHOULDER CONSTRUCTION THE DEPARTMENT WILL FURNISH THESE SIGNS FOR THE CONTRACTOR TO PICK-UP, TRANSPORT AND ERECT, THE DEPARTMENT WILL LATER REMOVE AND RETAIN THE SIGNS.
11. IF EXISTING ADVANCE WARNING SIGNS (ROAD WORK, W20-1) ARE IN PLACE, AND ARE IN CONFLICT WITH THE LANE CLOSURE SIGNS SHOWN, THEY SHALL BE RESET IN ADVANCE OF LANE CLOSURE WITH THE MINIMUM SIGN SPACING REQUIRED BY THE STANDARDS AND THE MUTCD MAINTAINED.
12. HIGHWAY WORK ZONE SIGNS (HWZ-2 AND HWZ-3) SHALL BE INSTALLED ON THE TRAVEL WAY AND THE INTERSECTING ROADWAY AS REQUIRED IN SECTION 150.
13. THE G20-1 SIGNS SHOULD BE PLACED AT EACH TERMINUS OF THE PROJECT. PREFERABLY BETWEEN THE LAST ADVANCE WARNING SIGN(ROAD WORK- 500 FT.) AND BEFORE THE ADVANCE WARNING SIGNS FOR LANE SHIFTS, LANE CLOSURES, ETC.
14. THE PORTABLE CHANGEABLE MESSAGE SIGN (PCMS) SHALL BE PLACED ONE MILE IN ADVANCE OF A LANE CLOSURE WITH A MESSAGE DENOTING THE APPROPIATE LANE CLOSURE ONE MILE AHEAD.

BY	DATE	REVISION
GLO	9-4-07	ADDED POTABLE MESSAGE SIGN. ADDED GEN. NOTE #14
GLO	3-30-06	REMOVED FLAGS AND REV. GENERAL NOTES, REV. SIGN G20-2A TO G20-2.

DEPARTMENT OF TRANSPORTATION
STATE OF GEORGIA

STANDARD TRAFFIC CONTROL DETAIL FOR LANE CLOSURE ON MULTI-LANE DIVIDED HIGHWAY

NO SCALE — REV. & REDR. JULY, 1999

DES. ____ DRW. ____ TRA. ____ CHK. ____

(SUBMITTED) _____ STATE ROAD & AIRPORT DESIGN ENGINEER

(APPROVED) Derald M Rivs CHIEF ENGINEER

NUMBER 9106

STATE	PROJECT NUMBER	SHEET NO.	TOTAL SHEETS
GA.			

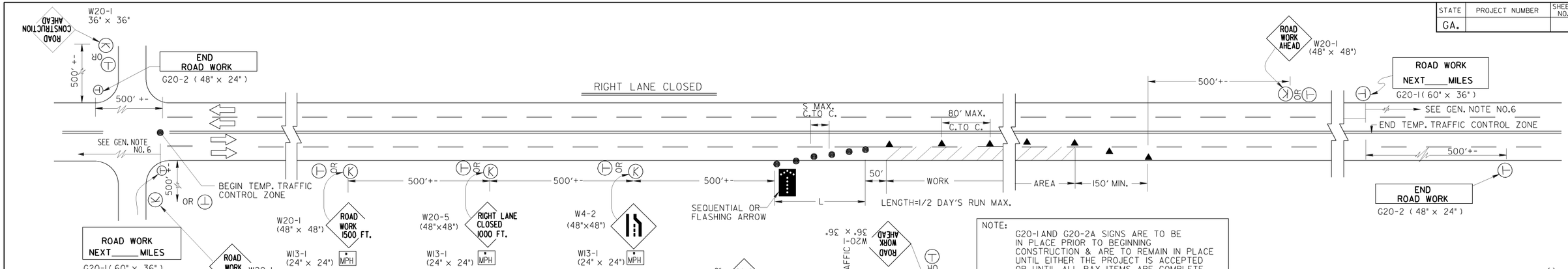

POSTED SPEED MPH PRIOR TO WORK	TYPICAL DIMENSIONS (FT.)				
	L (FOR 12' OFFSET)	S	2S	3S	6S or 300'MAX.
25	125	25	50	75	150
30	180	30	60	90	180
35	245	35	70	105	210
40	320	40	80	120	240
45	540	45	90	135	270
50	600	50	100	150	300
55	660	55	110	165	300
60	720	60	120	180	300
65	780	65	130	195	300

(SEE FORMULA FOR OTHER CONDITIONS)

L=WS FOR SPEEDS OF 45 M.P.H. OR GREATER, OR $WS^2/60$ FOR SPEEDS OF 40 M.P.H. OR LESS, WHERE:
L=MIN. LENGTH OF TAPER
S=POSTED SPEED
W=WIDTH OF OFFSET.

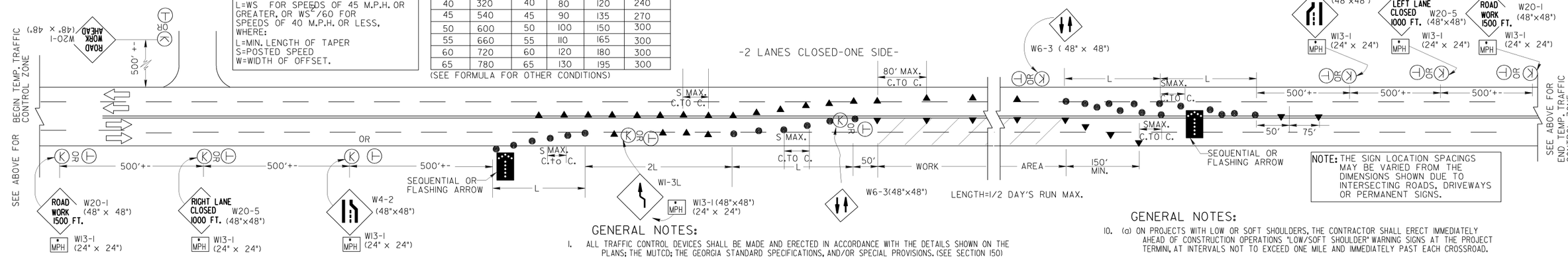

FOR LOCATIONS ON THIS PROJECT INVOLVING ADDED TURN LANES, THE DISTRICT TRAFFIC OPERATIONS OFFICE WILL FURNISH A SCHEMATIC DRAWING OF THE TEMPORARY PAVEMENT MARKINGS AT THE PRE-CONSTRUCTION CONFRENCE.

(WHERE OTHER PAVEMENT MARKINGS ARE REQUIRED FOR TRAFFIC CONTROL, SEE SEC. 150)

DETAIL OF TEMPORARY TRAFFIC STRIPE

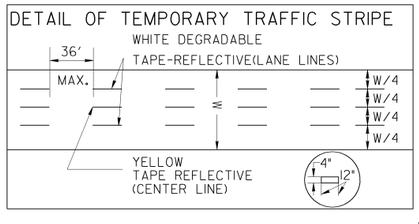

- WHEN TEMPORARY OPERATING SPEEDS ARE LESS THAN THE POSTED SPEED LIMIT, THE ADVISORY SPEED PLATES (WI3-1) SHALL BE USED IN 10 M.P.H. INCREMENTS, UNTIL THE SPEED IS REDUCED TO THE TEMPORARY OPERATING SPEED.

STANDARD LEGEND

- ● STRIPED DRUM
- ⊢ TEMPORARY POST MOUNTED SIGN (OFF SHOULDER) --FOR LONG TERM LANE CLOSURE SUCH AS STATIONARY OPERATIONS, BRIDGE WIDENING PROJECTS ETC. - (7' MOUNT HEIGHT)
- (K) PORTABLE MOUNTED SIGN (ON SHOULDER) --FOR SHORT TERM LANE CLOSURE SUCH AS MOVING OPERATIONS, RESURFACING PROJECTS, ETC. (SEE GENERAL NOTE. NO. 3)
- ▲ TRAFFIC CONE - 28" MIN. (DAYTIME USE ONLY)
- SEQUENTIAL OR FLASHING ARROW
- WORK AREA

GENERAL NOTES:

1. ALL TRAFFIC CONTROL DEVICES SHALL BE MADE AND ERECTED IN ACCORDANCE WITH THE DETAILS SHOWN ON THE PLANS; THE MUTCD; THE GEORGIA STANDARD SPECIFICATIONS, AND/OR SPECIAL PROVISIONS. (SEE SECTION 150)
2. ALL TRAFFIC CONTROL DEVICES SHALL BE AS SHOWN, OR AS DIRECTED BY THE ENGINEER. ADDITIONAL DEVICES MAY BE REQUIRED AS DIRECTED BY THE ENGINEER.
3. ALL PORTABLE SIGNS SHALL BE MOUNTED A MINIMUM OF 1FOOT ABOVE THE LEVEL OF PAVEMENT EDGE FOR DIRECTIONAL TRAFFIC OF TWO (2) LANES OR LESS AND A MINIMUM OF 7 FEET FOR DIRECTIONAL OF THREE (3) OR MORE LANES. ALL PORTABLE SIGNS AND SIGN MOUNTING DEVICES UTILIZED IN THE WORK SHALL BE NCHRP 350 COMPLIANT. PORTABLE SIGNS MAY BE USED WHEN THE DURATION OF THE WORK IS LESS THAN 3 DAYS.
4. WHEN THE CONSTRUCTION AREA HAS ENTRANCE/EXIT RAMPS OR INTERSECTIONS, WORK WILL BE PERFORMED IN SUCH A MANNER TO PERMIT TRAFFIC TO OPERATE WITH THE LEAST AMOUNT OF INCONVENIENCE AS POSSIBLE. ADDITIONAL CHANNELIZATION AND SIGNING SHALL BE INSTALLED, AS REQUIRED, TO ALLOW TRAFFIC TO REMAIN AS OPERATIONAL AS POSSIBLE. WHEN ENTRANCE RAMPS/INTERSECTIONS ARE INOPERABLE, FLAGGERS WILL BE UTILIZED TO CONTROL AND PROHIBIT MOVEMENT INTO THE PROJECT AT THAT POINT UNTIL CONSTRUCTION HAS CLEARED THE RESTRICTION SUFFICIENT TO RETURN TO OPERATIONAL STATUS.
5. FOR NIGHT TIME OPERATIONS, DRUMS SHALL HAVE, FOR THE LENGTH OF THE TAPER ONLY, A SIX (6") INCH ORANGE REFLECTIZED TOP STRIPE ON EACH DRUM IN THE TAPER AS REQUIRED IN SECTION 150. SPACING OF DEVICES SHALL BE AS SHOWN DURING DAYLIGHT HOURS, CONES (28" MIN.) MAY BE USED IN ADVANCE OF AND THROUGHOUT WORK AREA.
6. SIGNS SHOWN HERE ARE IN ADDITION TO ALL ADVANCE WARNING SIGNS REQUIRED IN SECTION 150.
7. A PORTABLE SELF-SUSTAINED SEQUENTIAL OR FLASHING ARROW SIGN SHALL BE USED AT THE BEGINNING OF EACH LANE CLOSURE.
8. WHEN NOT IN USE, PORTABLE SIGNS SHALL BE REMOVED FROM THE TRAVELWAY SO THAT THE MESSAGE IS NOT VISIBLE TO THE MOTORIST. INTERIM SIGNS THAT ARE PERMANENT MOUNTED SHALL BE COVERED WHEN NOT APPLICABLE. SEE SECTION 150.
9. PAYMENT FOR TRAFFIC CONTROL SHALL BE PER SECTION 150.

GENERAL NOTES:

10. (a) ON PROJECTS WITH LOW OR SOFT SHOULDERS, THE CONTRACTOR SHALL ERECT IMMEDIATELY AHEAD OF CONSTRUCTION OPERATIONS 'LOW/SOFT SHOULDER' WARNING SIGNS AT THE PROJECT TERMINI, AT INTERVALS NOT TO EXCEED ONE MILE AND IMMEDIATELY PAST EACH CROSSROAD.

    (b) WHERE THE CONTRACTOR IS NOT RESPONSIBLE FOR SHOULDER CONSTRUCTION, THE DEPARTMENT WILL FURNISH THESE SIGNS FOR THE CONTRACTOR TO PICK-UP, TRANSPORT AND ERECT, THE DEPARTMENT WILL LATER REMOVE AND RETAIN THE SIGNS.
11. HIGHWAY WORK ZONE SIGNS (HWZ-2 AND HWZ-3) SHALL BE INSTALLED ON THE TRAVEL WAY AND THE INTERSECTING ROADWAY AS REQUIRED IN SECTION 150.
12. THE G20-1 SIGNS SHOULD BE PLACED AT EACH TERMINUS OF THE PROJECT, PREFERABLY BETWEEN THE LAST ADVANCE WARNING SIGN(ROAD WORK- 500 FT.) AND BEFORE THE ADVANCE WARNING SIGNS FOR LANE SHIFTS, LANE CLOSURES, ETC.

DATE	REVISION	BY
3-30-06	REMOVED FLAGS AND REV. GENERAL NOTES, REV. SIGN G20-2A TO G20-2.	GLO

DEPARTMENT OF TRANSPORTATION
STATE OF GEORGIA

STANDARD TRAFFIC CONTROL DETAIL
FOR LANE CLOSURE ON MULTI-LANE UNDIVIDED HIGHWAY

NO SCALE — REV. & REDR. JULY, 1999

DES. ____ (SUBMITTED) STATE ROAD & AIRPORT DESIGN ENGINEER
DRW. ____
TRA. ____
CHK. ____ (APPROVED) CHIEF ENGINEER

NUMBER 9107

STATE	PROJECT NUMBER	SHEET NO.	TOTAL SHEETS
GA.			

NOTE "B":
CURVE DESIGNS OR LANE SHIFTS SHALL BE AS SHOWN IN THE PLANS OR AS SUBMITTED BY THE CONTRACTOR WITH D.O.T. APPROVAL DESIGNS WHICH NECESSITATE SPEED REDUCTIONS WILL REQUIRE WI3-1 SIGNING. *

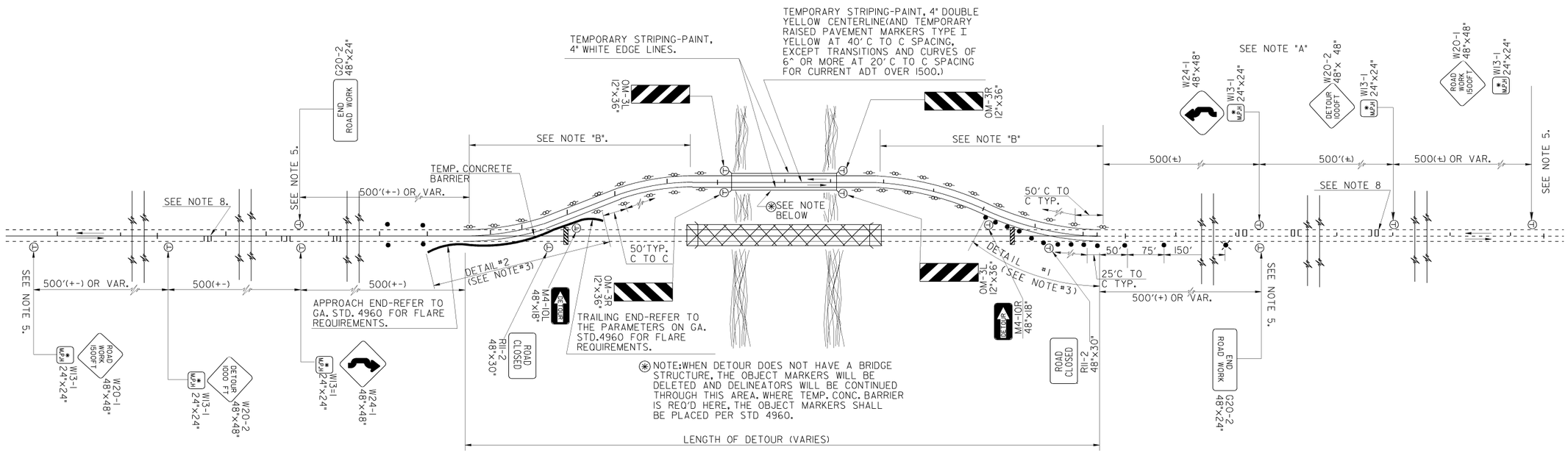

SEE NOTE "A"

* WHEN TEMPORARY OPERARATING SPEEDS ARE LESS THAN THE POSTED SPEED LIMIT, THE ADVISORY SPEED PLATE (WI3-1) SHALL BE USED IN 10 M.P.H. INCREMENTS UNTIL THE SPEED IS REDUCED TO TEMPORARY OPERATING SPEED.

STANDARD LEGEND

- STRIPED DRUM
- TEMPORARY POST MOUNTED SIGN - (7' MOUNT HEIGHT)
- TYPE I CLEAR (WHITE) DELINEATOR DOUBLE FACE
- TYPE III BARRICADES

NOTE "A":

WHERE THE LENGTH OF DETOUR EXCEEDS 1/2 MILE, OMIT THE W24-1 SIGN AND SUBSTITUTE A WI-4L (OR WI-4R) SIGN 500'+- IN ADVANCE OF BEGINNING CURVE OR LANE SHIFT WITH A WI-4R (OR WI-4L) SIGN ALSO ADDED WHERE THE ALIGNMENT REVERSES. THIS COMBINATION IS REQUIRED FOR BOTH DIRECTIONS OF TRAFFIC. ADVISORY SPEED PLATES ARE REQUIRED WITH WI-4L AND WI-4R SIGNS UNLESS APPROVED OTHERWISE.

GENERAL NOTES:

1. UNLESS SPECIFIED OTHERWISE IN THE PLANS, THE DETOUR PAVEMENT STRUCTURE SHALL CONSIST OF 8" MIN. GRADED AGGREGATE BASE COURSE, 19 mm Superpave- 220 lb/yd^2 COURSE AND 12.5 mm Superpave- 165 lb/yd^2 SURFACE COURSE AS APPROVED BY THE ENGINEER.
2. USABLE SHOULDERS SHALL NOT BE PAVED.
3. EXISTING ROAD MAY BE CLOSED BY EITHER DETAIL #1 OR #2 AS SHOWN IN THE PLANS OR AS DIRECTED BY THE ENGINEER. ENGINEER MAY SPECIFY TEMP. CONC. BARRIER AT OTHER LOCATIONS.
4. WHEN TRAFFIC CONTROL IS LISTED AS A PAYMENT ITEM IN THE PROPOSAL, PAYMENT WILL BE MADE BY THE LUMP SUM BID, OTHERWISE ALL THE TRAFFIC CONTROL COST WILL BE INCLUDED IN THE OVER-ALL BID SUBMITTED EXCEPT AS SPECIFIED BELOW. THE UNCLASSIFIED EXCAVATION, BORROW, MISCELLANEOUS STRUCTURES (INCLUDING BRIDGES), BASE, BITUMINOUS TACK COAT, PAVING, ETC. THAT WILL BE NEEDED TO CONSTRUCT THE DETOUR WILL BE PAID FOR SEPARATELY UNDER PROPER PAYMENT ITEMS. ALSO, THE TEMPORARY CONCRETE BARRIER WALL WILL BE PAID FOR SEPARATELY UNDER PROPER PAYMENT ITEMS.
5. WHERE THE LENGTH OF PROJECT EXCEEDS THE DETOUR LENGTH, THE LOCATIONS OF W20-1 AND G20-2 SIGNS SHALL BE VARIED AS DIRECTED BY THE ENGINEER TO CORRESPOND WITH THE BEGINNING AND THE END OF THE PROJECT.
6. SIGNS SHOWN HERE ARE IN ADDITION TO ALL ADVANCE WARNING SIGNS REQUIRED BY SECTION 150.
7. TRAFFIC CONTROL SHOWN IS FOR A TYPICAL BY-PASS DETOUR, ADDITIONAL TRAFFIC CONTROL MAY BE SPECIFIED FOR INDIVIDUAL CONDITIONS AS DIRECTED BY THE ENGINEER, AS SHOWN ON THE PLANS, OR IN SPECIAL PROVISIONS.
8. SEE SEPARATE SHEET FOR DETAILS IF RUMBLE STRIPS ARE SPECIFIED ON THE TRAVEL LANES.
9. TEMPORARY PIPES, INLETS, END SECTIONS, ETC. ARE INCLUDED IN PAYMENT FOR TRAFFIC CONTROL AND SHALL REMAIN THE PROPERTY OF THE CONTRACTOR AFTER REMOVAL
10. THIS STANDARD MAY BE USED FOR 3-LANE HIGHWAY BY MODIFYING PAVEMENT MARKINGS IN ACCORDANCE WITH THE MUTCD.

NOTE: FOR GENERAL NOTES, LEGEND, & MISC. DETAILS, REFER TO: "TRAFFIC CONTROL GENERAL NOTES, STD. LEGEND AND MISC. DETAILS"

BY	REVISION	DATE
GLO	REMOVED FLAGS AND REV. W1-5 SIGN TO W-24-1.	3-30-06

DEPARTMENT OF TRANSPORTATION
STATE OF GEORGIA

STANDARD
TRAFFIC CONTROL DETAIL TYPICAL BY-PASS DETOUR FOR 2-LANE HIGHWAY

NO SCALE — JAN., 2001

DES. ____ DRW. ____ TRA. ____ CHK. ____

(SUBMITTED) STATE ROAD & AIRPORT DESIGN ENGINEER

(APPROVED) CHIEF ENGINEER

NUMBER 9108

STATE	PROJECT NUMBER	SHEET NO.	TOTAL SHEETS
GA.			

NOTE: LOCATION OF DETOURS TO BE DETERMINED BY THE ENGINEER ON CONSTRUCTION OR AS SHOWN IN THE PLANS.

TEMPORARY TRAFFIC CONTROL DEVICES FOR DETOURS SHALL CONFORM TO THE REQUIREMENTS OF THE MANUAL ON UNIFORM TRAFFIC CONTROL DEVICES AND SHALL BE INCLUDED IN THE PAYMENT FOR TRAFFIC CONTROL.

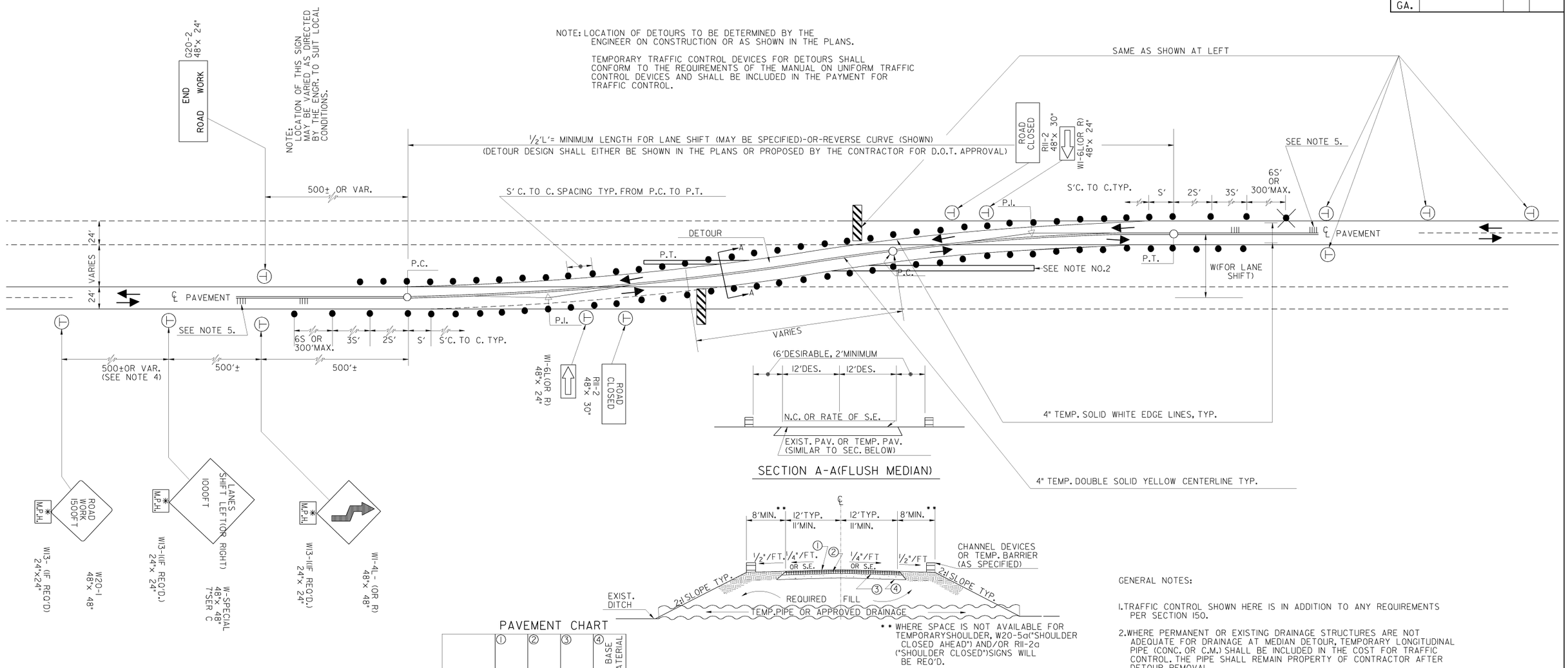

SECTION A-A(FLUSH MEDIAN)

** WHERE SPACE IS NOT AVAILABLE FOR TEMPORARYSHOULDER, W20-5a("SHOULDER CLOSED AHEAD") AND/OR RII-2a ("SHOULDER CLOSED")SIGNS WILL BE REQ'D.

SECTION A-A(DEPRESSED MEDIAN)

PAVEMENT CHART

CURRENT ADT (one-way)	① 12.5 SUPERPAVE 165 lb/yd²	② 19 mm SUPERPAVE 220 lb/yd²	③ 25 mm SUPERPAVE 330 lb/yd²	④ 8" GRADED AGGREGATE BASE -OR-OTHER BASE MATERIAL
UNDER 750	X	X		X
750-1500	X	X		X
1500-6000	X	X	X	X
OVER 6000	X	X	X*	X

*USE 25 mm SUPERPAVE-440 lb/yd² IF DETOUR IS TO BE IN OPERATION FOR LONGER THAN 2 YEAR.

SPEED POSTED AT; WI-4 SIGN (MPH)	TYPICAL DIMENSIONS (FT.) S	2S	3S	6S OR 300' MAX.
25	25	50	75	150
30	30	60	90	180
35	35	70	105	210
40	40	80	120	240
45	45	90	135	270
50	50	100	150	300
55	55	110	165	300
		(NOT APPLICABLE FOR CONTINUOUS TRAFFIC CONTROL-SEE NOTE 4)		

* TEMPORARY ADVISORY SPEEDS(IF REQ'D) WILL TYPICALLY DEPEND UPON THE DESIGN SPEED OF THE CURVES OR LANE SHIFTS AND SHALL BE SHOWN IN THE PLANS OR APPROVED BY THE ENGINEER.

STANDARD LEGEND

- TYPE III BARRICADE
- SEQUENTIAL-OR-FLASHING ARROW
- TEMPORARY POST MOUNTED SIGN - (7' MOUNT HEIGHT)
- (K) PORTABLE MOUNTED SIGN - MINIMUM HEIGHT OF 1FT. ABOVE THE EDGE OF PAVEMENT; INSTALLED AS PER NCHRP 350 TESTING REQUIREMENTS.
- WORK AREA

GENERAL NOTES:

1. TRAFFIC CONTROL SHOWN HERE IS IN ADDITION TO ANY REQUIREMENTS PER SECTION 150.
2. WHERE PERMANENT OR EXISTING DRAINAGE STRUCTURES ARE NOT ADEQUATE FOR DRAINAGE AT MEDIAN DETOUR, TEMPORARY LONGITUDINAL PIPE (CONC. OR C.M.) SHALL BE INCLUDED IN THE COST FOR TRAFFIC CONTROL. THE PIPE SHALL REMAIN PROPERTY OF CONTRACTOR AFTER DETOUR REMOVAL.
3. TEMPORARY BARRIER, TEMPORARY ATTENTUATORS, AND/OR GUARDRAIL, WHEN REQUIRED, SHALL BE IN ACCORDANCE WITH STD. 4960 OR OTHER PLAN DETAILS.
4. WHERE CONSTRUCTION BEGINS IN ADVANCE OF, OR EXTENDS PAST THE CROSSOVER THE DESIGNATED CHANNELIZATION DEVICES OR TEMPORARY BARRIER SHALL BE EXTENDED ACCORDINGLY WITH THE INITIAL W20-1 SIGNS AND G20-2 SIGNS LOCATED RELATIVE TO THE PROJECT LIMITS.
5. SEE SEPARATE SHEET WHERE RUMBLE STRIPS ARE SPECIFIED.

FORMULA:

'L'= SxW FOR SPEEDS OF 45 MPH, OR GREATER

$'L' = \frac{WS^2}{60}$ FOR SPEEDS OF 40 MPH, OR LESS

WHERE: S= POSTED SPEED;
W= WIDTH OF LANE SHIFT;
AND 'L'= LENGTH OF TAPER.

MIN. LENGTH FOR LANE SHIFTS=½'L'
MIN. LENGTH FOR SHLDR. CLOSURE=1/3'L'
DESIRABLE LENGTH FOR LANE SHIFT = 'L'

REVISION	DATE	BY
REMOVED FLAGS	3-30-06	GLO

DEPARTMENT OF TRANSPORTATION
STATE OF GEORGIA

STANDARD

TRAFFIC CONTROL DETAILS TYPICAL DETOUR ACROSS MEDIAN

NO SCALE SEPT., 1996

DES. ____ DRW. ____ TRA. ____ CHK. ____

(SUBMITTED) STATE ROAD & AIRPORT DESIGN ENGINEER

(APPROVED) CHIEF ENGINEER

NUMBER 9109

STATE	PROJECT NUMBER	SHEET NO.	TOTAL SHEETS
GA.			

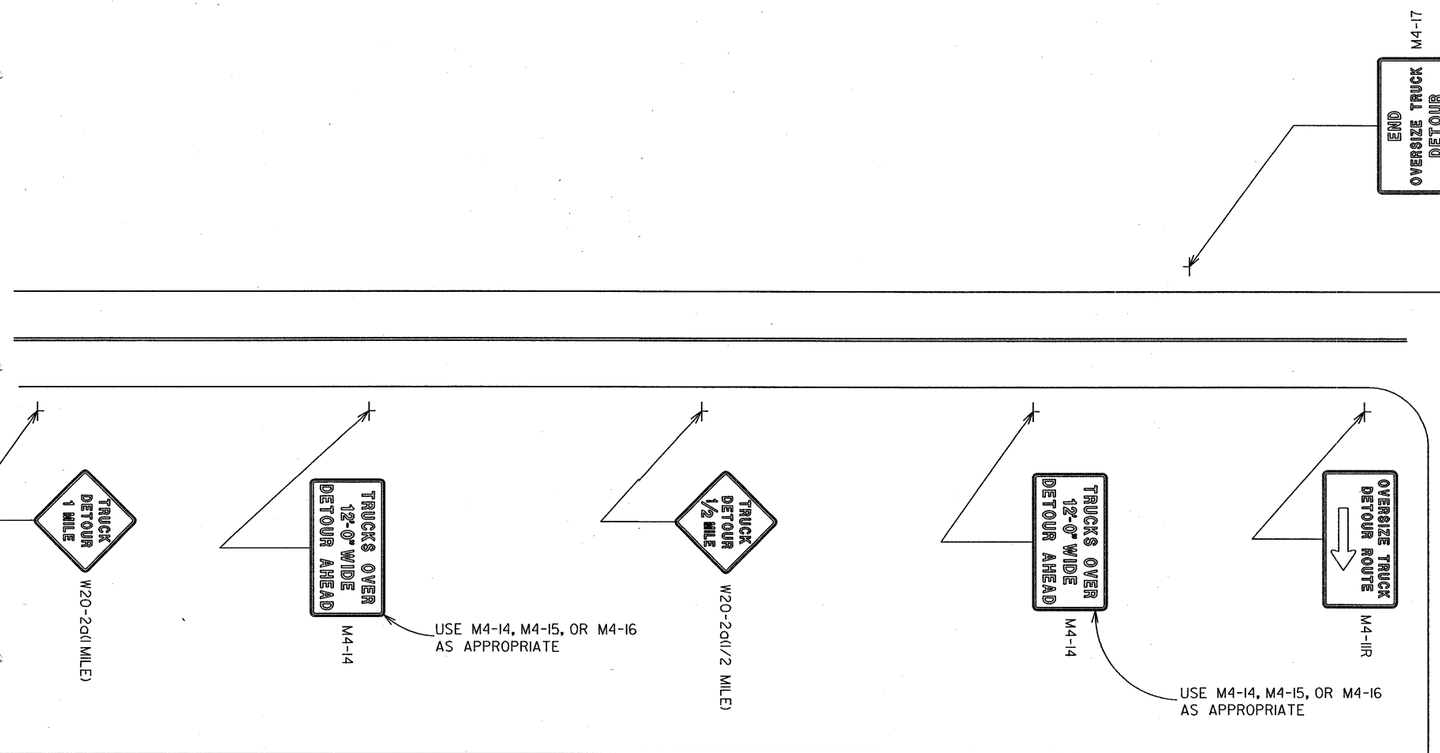

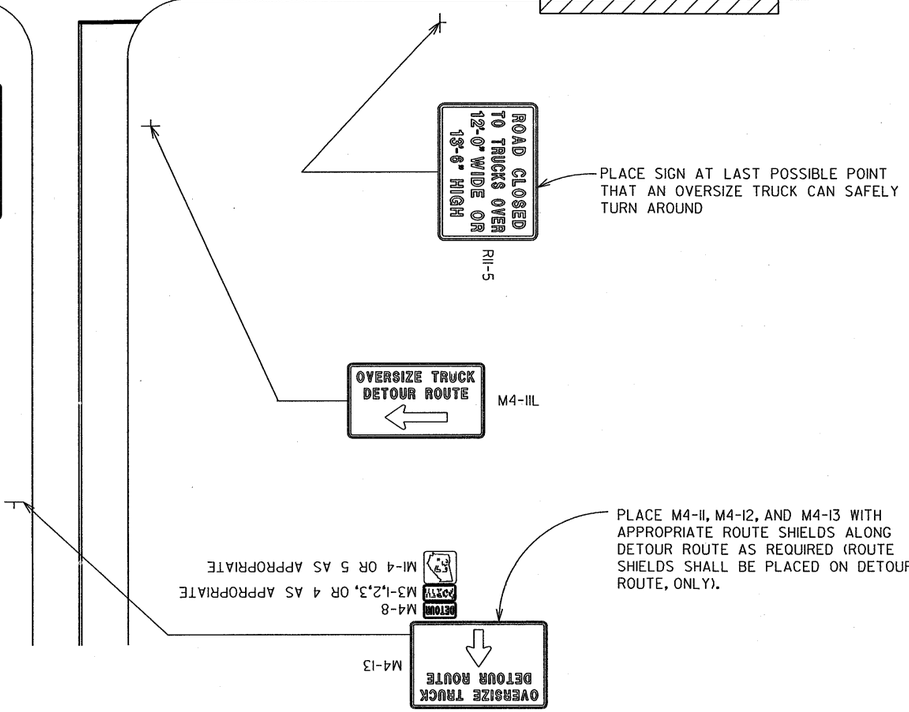

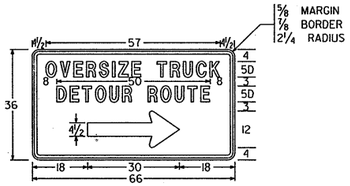

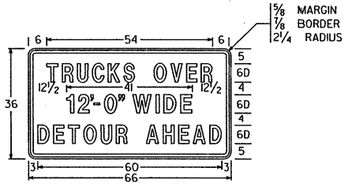

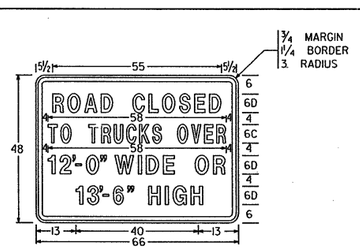

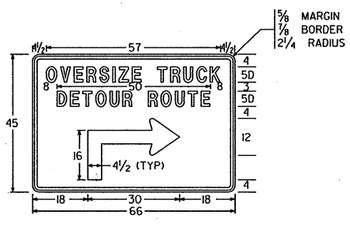

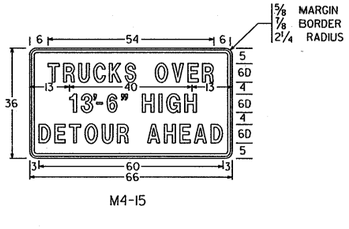

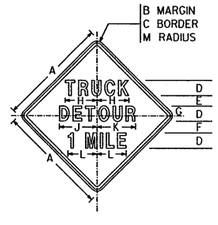

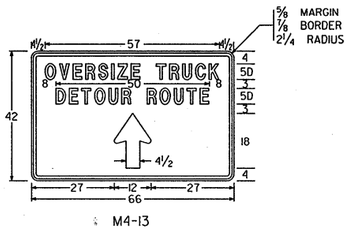

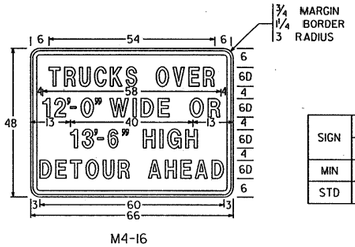

SIGN	DIMENSION													
	A	B	C	D	E	F	G	H	J	K	L	M	N	P
MIN	36	5/8	1/8	5D	3 1/2	3 1/4	3 3/4	10 3/8	12 1/4	12 1/2	9 1/2	2 1/8	11 1/4	7 1/2
STD	48	3/4	1 1/4	7D	4 3/4	5 1/4	4 1/2	14 1/2	17 1/4	17 1/2	13 3/16	3 1/16	15 3/4	10 1/2

W20-2a

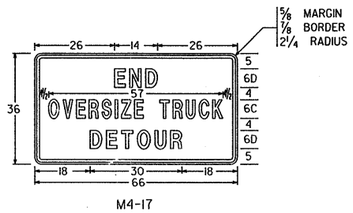

NOTES:
1. ALL SIGN DIMENSIONS ARE IN INCHES.
2. M AND W SIGNS SHALL HAVE ORANGE REFLECTORIZED BACKGROUNDS WITH BLACK LEGENDS, BORDERS, AND SYMBOLS.
3. R SIGNS SHALL HAVE WHITE REFLECTORIZED BACKGROUNDS WITH BLACK LEGENDS AND BORDERS.
4. W20-2a SIGNS SHALL BE 48" x 48" WHEN THE SPEED LIMIT IS GREATER THAN 45 M.P.H.

DEPARTMENT OF TRANSPORTATION
STATE OF GEORGIA

STANDARD

DETAIL FOR OVERSIZE TRUCK DETOUR IN CONSTRUCTION AREAS

NO SCALE — NOVEMBER, 1999

DATE / REVISION / BY

DES. KBH (SUBMITTED) James A. Kessel
STATE ROAD & AIRPORT DESIGN ENGINEER
DRW. KBH
TRA. ____
CHK. ____
(APPROVED) Genl L. Gaddis
CHIEF ENGINEER

NUMBER 9110

GDOT Georgia Department of Transportation | P. I. No.

WIDENED RIGHT SIDE
(DETAIL 1)

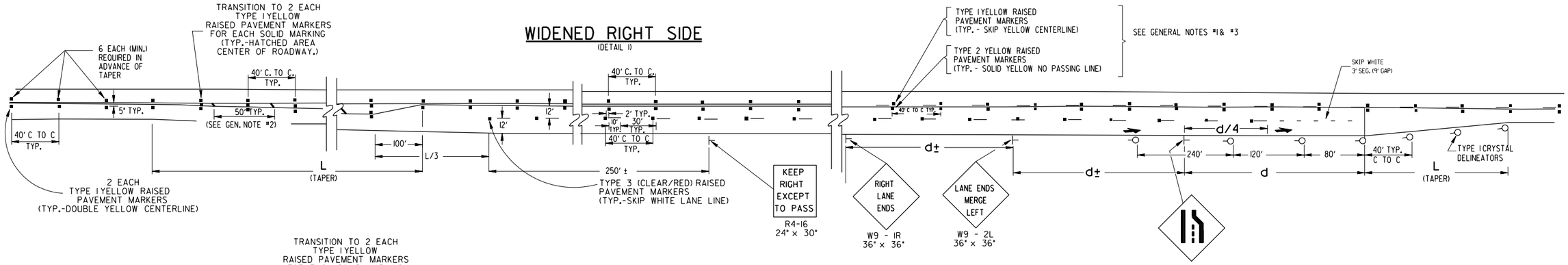

WIDENED LEFT AND RIGHT SIDES
(DETAIL 2)

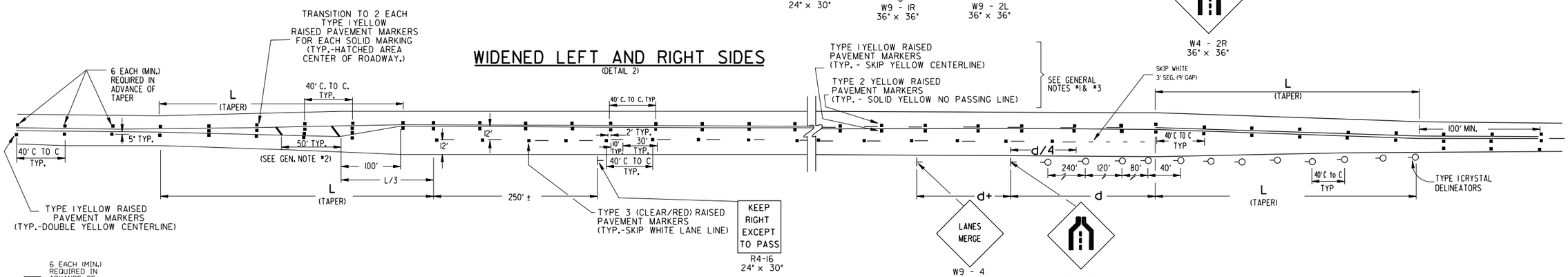

WIDENED LEFT SIDE FOR PASSING LANE ON RIGHT SIDE
(DETAIL 3)

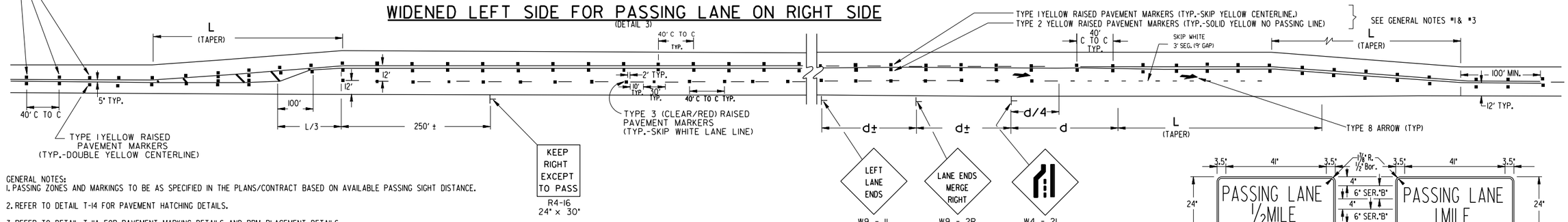

GENERAL NOTES:
1. PASSING ZONES AND MARKINGS TO BE AS SPECIFIED IN THE PLANS/CONTRACT BASED ON AVAILABLE PASSING SIGHT DISTANCE.

2. REFER TO DETAIL T-14 FOR PAVEMENT HATCHING DETAILS.

3. REFER TO DETAIL T-11A FOR PAVEMENT MARKING DETAILS AND RPM PLACEMENT DETAILS.

4. WHERE SPACE DOES NOT PERMIT PLACEMENT OF THE FULL SEQUENCE OF WARNING SIGNS SHOWN, THEN THE WARNING SIGN W9-2L(R) MAY BE OMITTED. IF SPACE FURTHER PROHIBITS PLACEMENT, THEN THE WARNING SIGN W9-1R(L) MAY ALSO BE OMITTED LEAVING ONLY THE W4-2R(L) SIGN. THE W4-2R(L) SIGN IS REQUIRED IN ALL CASES.

5. TAPER LENGTHS SHALL BE GREATER THAN OR EQUAL TO THE MINIMUMS IN THE M.U.T.C.D. FORMULAS SHOWN BELOW UNLESS OTHERWISE SPECIFIED IN PLANS/CONTRACT.

6. FOR PLACEMENT OF RUMBLE STRIPS, REFER TO GDOT DETAILS T-30 TO T-37.

7. DI7-2 SIGNS, AS SPECIFIED IN THE PLANS/CONTRACT OR BY THE ENGINEER, MAY BE REQUIRED IN ADVANCE OF EACH PASSING LANE; THESE SIGNS WILL HAVE A WHITE REFLECTORIZED LEGEND AND BORDER ON A GREEN REFLECTORIZED BACKGROUND.

8. THE BLANK FACE OF TYPE 2 RPMS SHALL FACE PASSING TRAFFIC, AND THE CLEAR FACE OF TYPE 3 CLR/RED RPMS SHALL BE ORIENTED TOWARDS NORMAL APPROACHING TRAFFIC.

TAPER FORMULA:

L = S x W FOR SPEEDS OF 45 M.P.H. OR GREATER
L = WS²/60 FOR SPEEDS OF 40 M.P.H. OR LESS

WHERE:

L = MINIMUM LENGTH OF TAPER, IN FEET
S = POSTED SPEED LIMIT, 85TH PERCENTILE SPEED, OR STATUTORY SPEED IN M.P.H.
W = WIDTH OF OFFSET, FEET

POSTED SPEED (MPH)	DISTANCE (FT.)	
	d	d/4
70	1250	315
65	1200	300
60	1100	275
55	990	250
50	885	225
45	775	195
40	670	170
35	565	145
30	460	115
25	325	85

R4-16

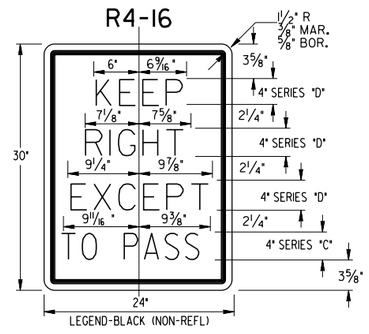

DI7-2

DATE	REVISION	BY
8-2-85	REV. TAPERS, ADD FORMULA	R.M.U.
11-18-88	NO END L.T. LANE	W.C.L.
8-16-90	ADD. R 555-1 SIGN	R.M.U.
5-25-93	REV. GEN. NOTE No. 8	R.M.U.
1-6-95	REV. RPM TP. 3	R.M.U.
12-9-96	SPEED-DIST. CHART	R.M.U.
3-30-06	REVISED SPEED-DIST. CHART	G.L.O.
07-01-24	CHART/NOTES,LETTERS,SIGNS	R.C.A.
07-01-24	GN, FIG.2, MINI SKIPS, ARROWS	R.C.A.

DEPARTMENT OF TRANSPORTATION
STATE OF GEORGIA

STANDARD

TAPERS, SIGNS, AND MARKINGS FOR PASSING LANES

NOT TO SCALE — FEB., 1983

DES. W.C.L.
DRW. N.M.
TRA. G.M.F.
CHK. R.M.U.

(SUBMITTED) _____
STATE ROAD & AIRPORT DESIGN ENGINEER
(APPROVED) _____
CHIEF ENGINEER

NUMBER 9121

Georgia Department of Transportation

2027

CONSTRUCTION DETAILS

STATE	PROJECT NUMBER	SHEET NO.	TOTAL SHEETS
GA.			

PICTORIAL SECTION
NO CONCRETE SIDEWALK

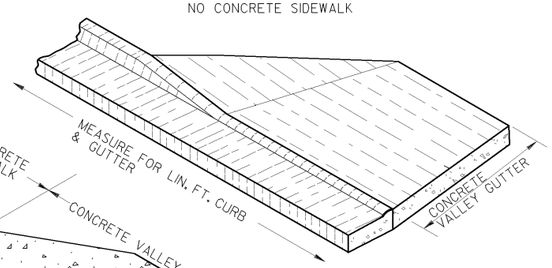

PICTORIAL SECTION
DRIVEWAY & CONRETE SIDEWALK

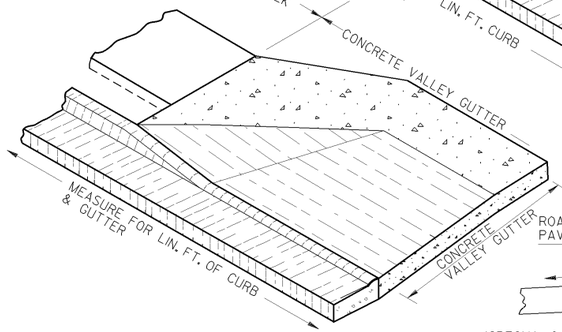

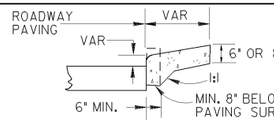

SECTION E-E

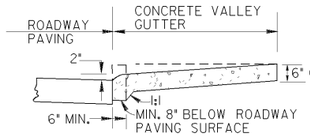

SECTION D-D

NOTE:
PLAN VIEW DETAILS NOT SHOWN FOR MODIFIED DRIVES WILL BE SIMILAR TO THAT SHOWN FOR STANDARD DRIVEWYS AT BOTTOM.

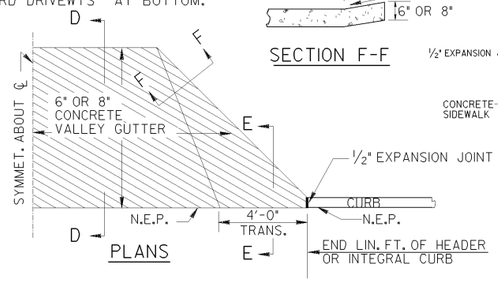

PLANS

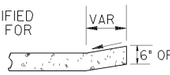

SECTION F-F

NOTE: DRIVEWAYS WILL NOT BE SKEWED EXCEPT WHERE PERPENDICULAR ALIGNMENT IS NOT FEASIBLE.

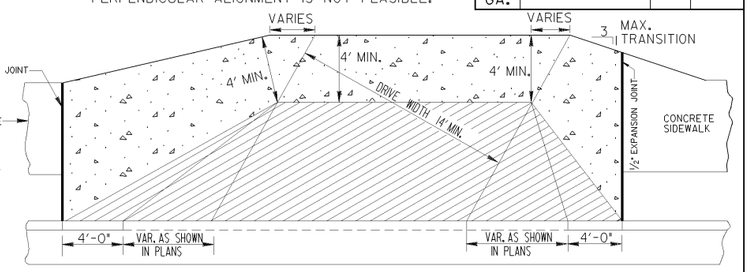

DRIVE ENTRANCE MODIFIED FOR SKEW

DRIVE MODIFIED FOR HEADER OR INTEGRAL CURB ALONG ROADWAY

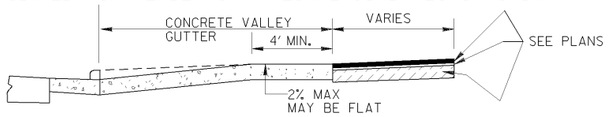

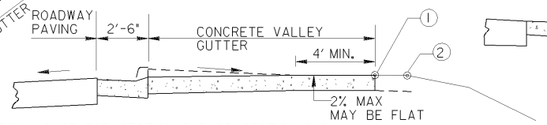

(SPECIAL CASE FOR SECTION B-B OR SECTION C-C; WHERE THE SHOULDER OR SIDEWALK IS SLOPED AWAY FROM THE ROAD)

SECTION WITH ASPHALT PAVING

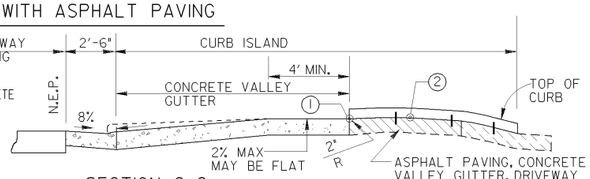

SECTION C-C

① IS THE BACK OF SIDEWALK SURFACE GRADE OR THE SHOULDER SURFACE GRADE 10'-0" BACK OF THE CURB, SLOPE OF THE CONCRETE VALLEY GUTTER WILL BE SUCH THAT THE BACK OF THE DRIVEWAY TAPER WILL BE THE SAME ELEVATION.

② IS BEGINNING OF DRIVEWAY TIE-IN.

NOTE: ① AND ② MAY COINCIDE

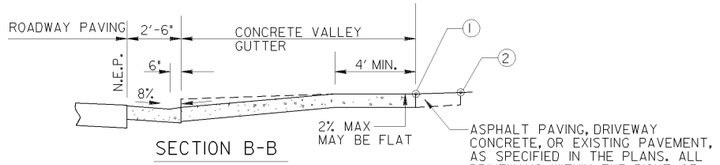

SECTION B-B

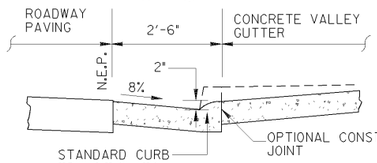

NOTE:
ALTERNATES TO THE CURB ISLAND DESIGN SHOWN HERE MAY BE SPECIFIED IN THE PLANS.

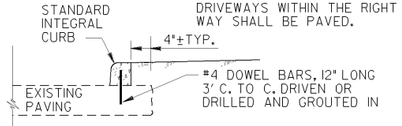

DOWELED CURB DETAIL

GENERAL NOTES:

1. QUANTITIES SHALL BE MEASURED AS FOLLOWS:
   (A) CONCRETE CURB & GUTTER ALONG ROADWAY---
   LIN. FT. OF CURB & GUTTER SHALL BE MEASURED FOR PAYMENT CONTINUOUS THRU THE DRIVE ENTRANCES. PAYMENT FOR CURB & GUTTER SHALL INCLUDE DAPPING DOWN THE TOP PORTION OF THE CURB. SQ. YDS. OF CONCRETE VALLEY GUTTER SHALL BE MEASURED FOR PAYMENT TO THE BACK OF THE CURB LINE.
   (B) HEADER (OR INTEGRAL) CURB ALONG ROADWAY---
   LIN. FT. OF CURB SHALL BE MEASURED FOR PAYMENT TO THE BEGINNING OF DRIVE WAY. SQ. YDS. OF CONCRETE VALLEY GUTTER SHALL BE MEASURED FOR PAYMENT TO THE EDGE OF THE ROADWAY PAVING.
2. N.E.P. IS DEFINED AS THE POINT WHERE THE ROADWAY PAVING MEETS THE CURB & GUTTER, OR HEADER CURB, OR FACE OR THE INTEGRAL CURB.
3. DRIVES RECONSTRUCTED SHALL BE REPLACED IN KIND, I.E, ASPHALT FOR ASPHALT, CONCRETE FOR CONCRETE, AND PAVED TO THE RIGHT OF WAY LINE.
4. SEE STANDARD 9032-B FOR DETAILS OF CONCRETE CURB & GUTTER, HEADER CURBS AND DOWELED INTEGRAL CURBS.
5. WIDTHS OF COMMERCIAL DRIVEWAYS SHALL COMPLY WITH CURRENT "RULES AND REGULATIONS FOR DRIVEWAY AND ENCROACHMENT CONTROL". WIDTHS OF RESIDENTIAL NON-COMMERCIAL DRIVEWAYS SHALL BE AS SPECIFIED IN THE PLANS.
6. THE SLOPE OF THE "TRANSITION AREA" OF THE CONCRETE VALLEY GUTTER SHALL NOT BE STEEPER THAN 8% (12:1) WHERE SIDEWALKS ARE LOCATED.
7. MAXIMUM DRIVEWAY GRADES SHOWN BELOW ARE INTENDED FOR RESIDENTIAL DRIVEWAYS WHERE FLATTER GRADES ARE NOT FEASIBLE. GRADES FOR COMMERCIAL DRIVEWAYS OR FOR TRUCKS SHALL NOT BE GREATER THAN 11% UNLESS SPECIFIED OTHERWISE.

Guidelines For Usage On Metric Projects

When these details are incorporated into plans and or projects that are being prepared or constructed in metric units, exact or precise conversion to metric units is not required. The dimensions shown that are in feet and inches may be converted to corresponding metric units using the following "Rounded-Off" conversion factors: 1" =25mm, 4"=100mm, and 12" or 1' =300mm. All measurement notes that refer to linear feet and square yards shall be interpreted to mean linear meters and square meters.

① IS THE BACK OF SIDEWALK SURFACE GRADE OR THE SHOULDER SURFACE GRADE 10'-0" BACK OF THE CURB, SLOPE OF THE CONCRETE VALLEY GUTTER WILL BE SUCH THAT THE BACK OF THE DRIVEWAY TAPER WILL BE THE SAME ELEVATION.

② IS BEGINNING OF DRIVEWAY TIE-IN.

NOTE: ① AND ② MAY COINCIDE

V.C.	MAXIMUM CUT	MAXIMUM FILL
5'	27%	16.67%
10'	28%	27%

V.C.	G1-G2 (MAX. ALGEBRAIC GRADE CHANGE)	
	SAG	CREST
5'	21%	25%
10'	25%	36%

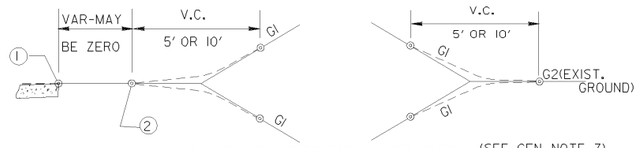

MAXIMUM DRIVEWAY GRADES (SEE GEN. NOTE 7)

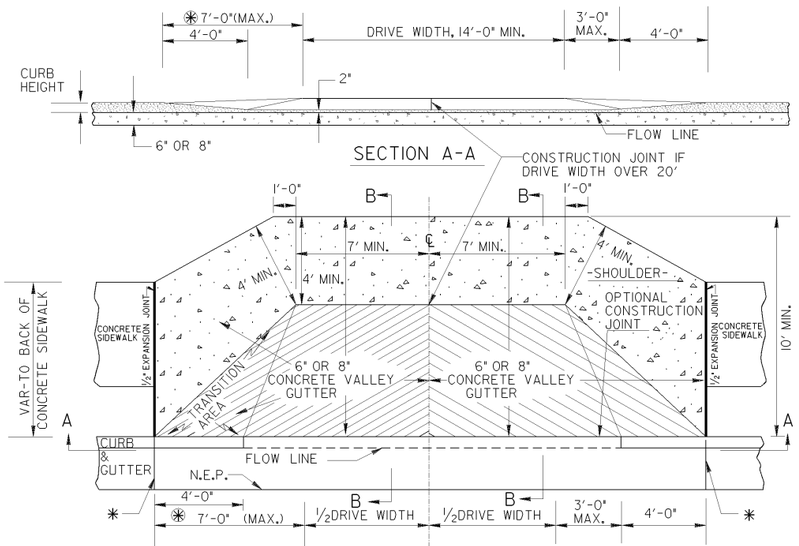

✱ CONSTRUCTION JOINT NOT REQUIRED IF THE OPTIONAL CONSTRUCTION JOINT IS PROVIDED AT BACK OF THE CURB.

HALF SECTION
SYMMETRICAL ABOUT THIS SIDE OF CENTERLINE WHERE CONCRETE SIDEWALK OCCURS.

PLAN

HALF SECTION

PLAN

RESIDENTIAL, COMMERCIAL OR NON-COMMERCIAL DRIVE

SECTION THRU GUTTER

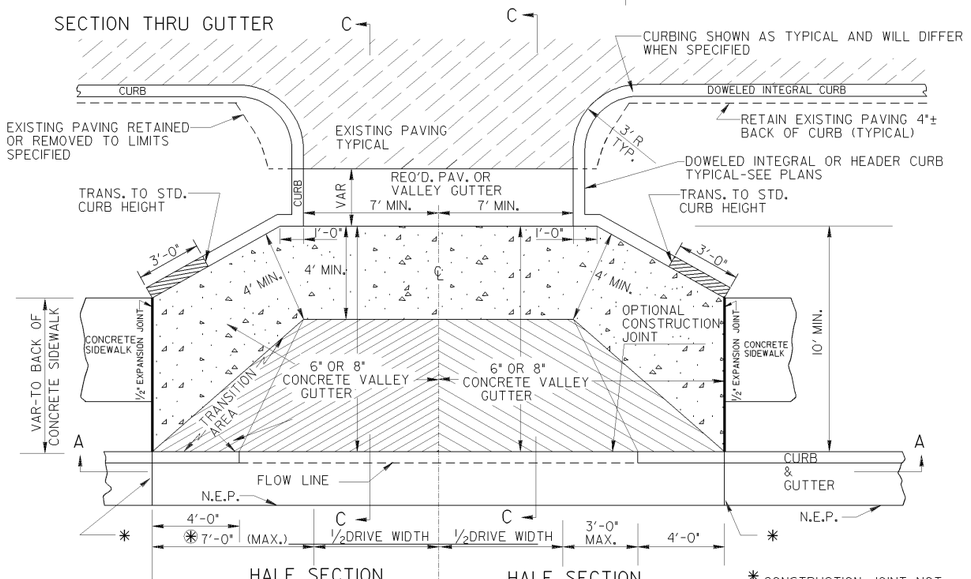

HALF SECTION
SYMMETRICAL ABOUT THIS SIDE OF CENTERLINE WHERE CONCRETE SIDEWALK OCCURS.

PLAN

HALF SECTION

PLAN

(SHOWN ADJACENT TO EXISTING PAVED PARKING AREA)

DRIVEWAY WITH CURB ISLAND

✱ CONSTRUCTION JOINT NOT REQUIRED IF THE OPTIONAL CONSTRUCTION JOINT IS PROVIDED BACK OF CURB.

✱ 7'-0" OR DISTANCE EQUAL TO THAT FROM BACK OF CURB TO BACK OF SIDEWALK, WHICHEVER IS LESSER

This Detail Replaces Ga Standard 6050

BY	REVISION	DATE
GLO	REV. PAVEMENT NOTES, REV. 12' TO 14' MIN., REV. SWALK	7-21-11
	REVISED	4-11-02
	REVISED	4-3-02

DEPARTMENT OF TRANSPORTATION
STATE OF GEORGIA

CONSTRUCTION DETAIL
DRIVEWAYS WITH TAPERED ENTRANCES CONCRETE VALLEY GUTTERS

NO SCALE — MARCH 12, 2002

NUMBER
A-01

STATE	PROJECT NUMBER	SHEET NO.	TOTAL SHEETS
GA.			

DETAIL OF 6" OR 8" CONCRETE VALLEY GUTTER WITH CURB

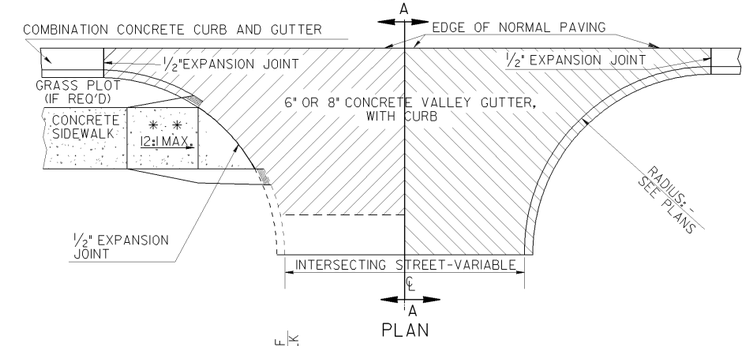

**SEE SPECIAL DETAILS FOR CURB CUT RAMP REQUIREMENTS.

DETAIL OF PLACING PAVEMENT ADJACENT TO GUTTER

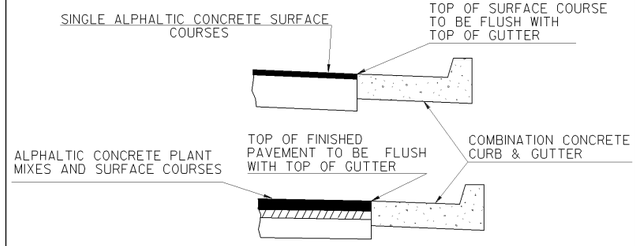

DETAIL OF ADDITIONAL PAVING AT STREET INTERSECTION

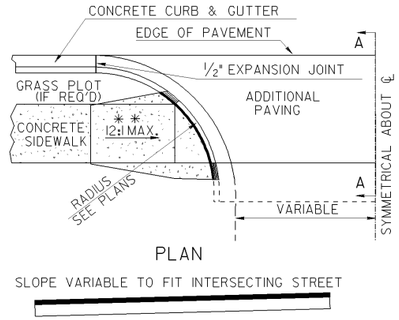

NOTE:
ADDITIONAL PAVING TO EXTEND TO END OF RETURN WHEN NO CONCRETE SIDEWALK IS SET UP.

**SEE SPECIAL DETAILS FOR CURB CUT RAMP REQUIREMENTS.

DETAIL OF 6" OR 8" CONCRETE VALLEY GUTTER WITHOUT CURB

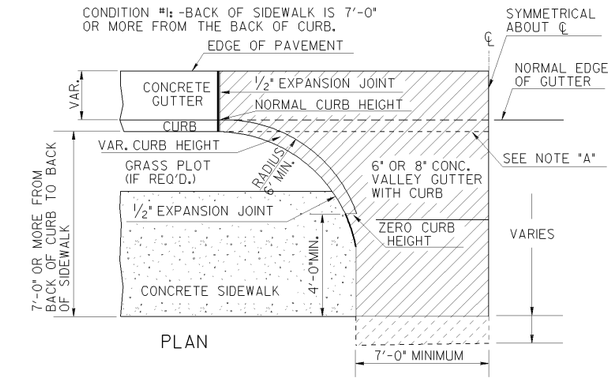

CONDITION #1-BACK OF SIDEWALK IS 7'-0" OR MORE FROM BACK OF CURB.
ZERO CURB HT. TO BE A MINIMUM OF 3'-2" FROM GUTTER LINE. IF CURB TRANSITION EXTENDS PAST EDGE OF SIDEWALK. THE TOP OF THE VARIABLE HEIGHT CURB IS TO REMAIN FLUSH WITH THE TOP OF THE SIDEWALK THROUGHT OUT TRANSITION. ZERO CURB HEIGHT WILL BE A MINIMUM OF 4'-0" FROM BACK OF SIDEWALK.

NOTE: "A"
CONSTRUCTION JOINT OPTIONAL: -WHEN IMPLEMENTED #4 TIE BARS WILL BE REQUIRED AS SHOWN BELOW TO BE INCLUDED IN UNIT PRICE FOR VALLEY GUTTER. IF CURB IS POURED THROUGH VALLEY GUTTER, THE TOP PORTION WILL BE REMOVED BEFORE SETTING TO MATCH GRADE OF VALLEY GUTTER.

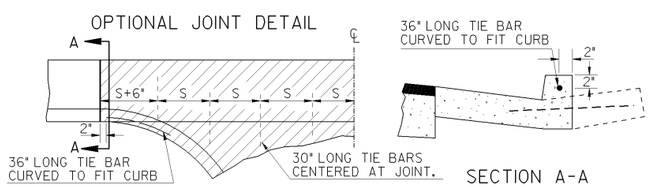

FOR 6" VALLEY GUTTER S(MAX)=24"
FOR 8" VALLEY GUTTER S(MAX)=16"

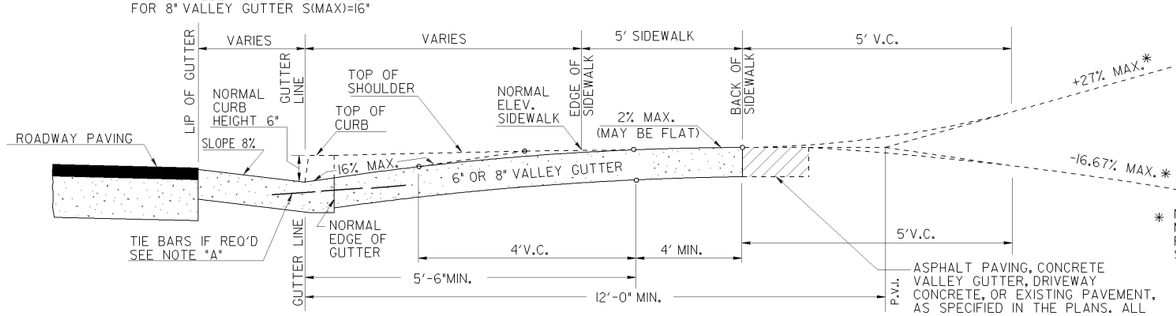

*PERCENTAGE OF ASCENDING GRADE MAY BE INCREASED AT A DISTANCE OF 23' FROM THE GUTTER LINE.

*PERCENTAGE DESCENDING GRADE MAY BE INCREASED AT A DISTANCE 18' FROM THE GUTTER LINE.

* NOTE:
MAXIMUM DRIVEWAY GRADES SHOWN ABOVE ARE INTENDED FOR RESIDENTIAL DRIVEWAYS WHERE FLATTER GRADES ARE NOT FEASIBLE. GRADES FOR COMMERCIAL DRIVEWAYS OR FOR TRUCKS SHALL NOT BE GREATER THAN 11% UNLESS SPECIFIED OTHERWISE.

DETAIL OF 4' CORRUGATED CONCRETE MEDIAN

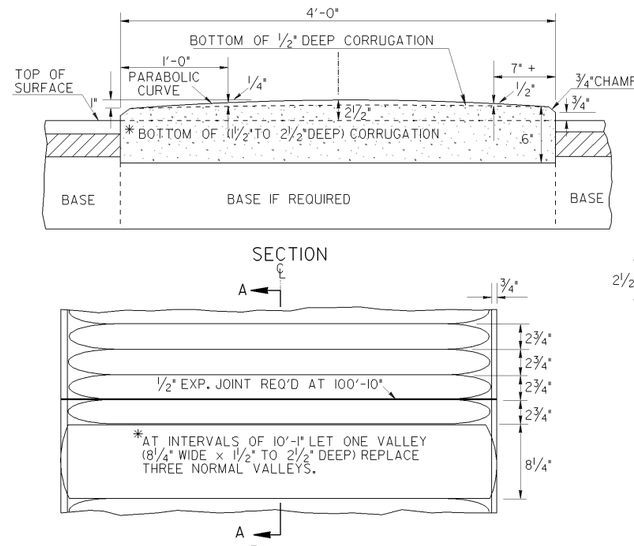

*APPLIES ONLY TO SUPERELEVATED CURVES, INCLUDING TRANSITIONS.

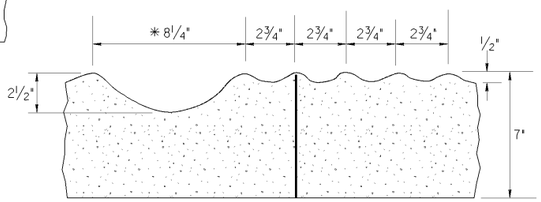

SEE SPECIAL DETAILS FOR DETAILS OF CONCRETE SIDEWALK.

This Detail Replaces Ga Standard 9031J

Guidelines For Usage On Metric Projects

When these details are incorporated into plans and or projects that are being prepared or constructed in metric units, exact or precise conversion to metric units is not required. The dimensions shown that are in feet and inches may be converted to corresponding metric units using the following "Rounded-Off" conversion factors: 1" =25mm, 4"=100mm, and 12" or 1' =300mm. All measurement notes that refer to linear feet and square yards shall be interpreted to mean linear meters and square meters.

BY	REVISION	DATE
GLO	ADDED PAVEMENT NOTE, REV.	7-21-11
GLO	DRIVEWAY SECTION	
GLO	REV. PAVEMENT NOTES	2-21-03
	REVISED	4-11-02
	REVISED	4-3-02

DEPARTMENT OF TRANSPORTATION
STATE OF GEORGIA

CONSTRUCTION DETAIL

CONCRETE VALLEY GUTTER AT STREET INTERSECTION
6" OR 8" CONCRETE VALLEY GUTTER AT DRIVE
PLACING PAVEMENT ADJACENT TO GUTTER
ADDITIONAL PAVING AT STREET INTERSECTION
4' CORRUGATED CONCRETE MEDIAN

NO SCALE — MARCH 12, 2002

NUMBER A-02

GDOT Georgia Department of Transportation | P. I. No.

TYPICAL LOCATIONS FOR CURB CUT RAMPS - PLAN VIEW

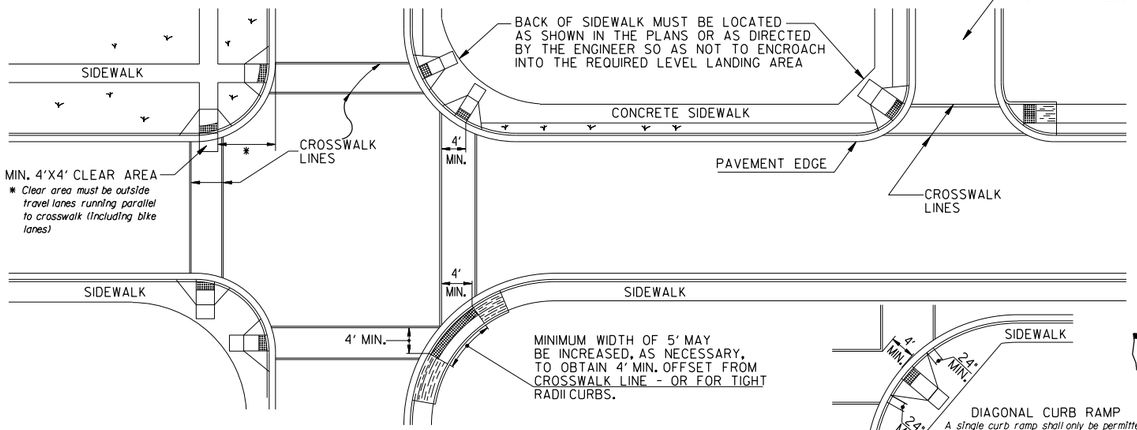

NOTE: THE CURB RAMP SHALL HAVE A RUNNING SLOPE OF 1:12 OR FLATTER UNLESS THIS REQUIREMENT WOULD CAUSE THE CURB RAMP RUN LENGTH TO EXCEED 15 FT. THE CURB RAMP MAY HAVE A RUNNING SLOPE STEEPER THAN 1:12 ONLY IF THE CURB RAMP RUN LENGTH IS AT LEAST 15 FT. IF THE RUNNING SLOPE LENGTH OR SLOPE REQUIREMENTS CANNOT BE MET DUE TO SITE CONSTRAINTS, AN ALTERNATE RAMP TYPE MAY BE SELECTED.

DIAGONAL CURB RAMP

A single curb ramp shall only be permitted at the apex of the intersection corner under the following conditions: In alterations, where existing physical conditions make it technically infeasible to provide one curb ramp or blended transition for each crosswalk, or to provide a single blended transition that spans all crosswalks at the intersection corner.

GUTTER TRANSITION DETAIL

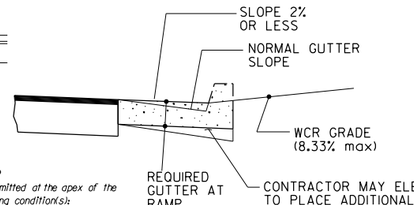

CONCRETE SIDEWALK DETAILS

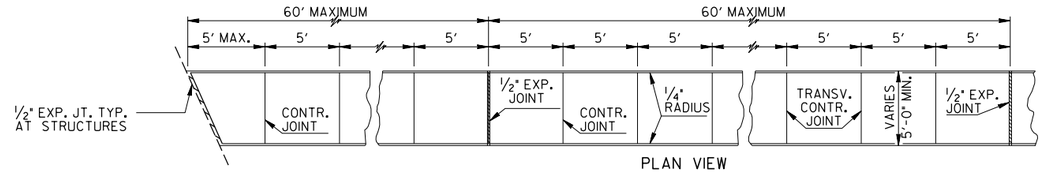

PLAN VIEW

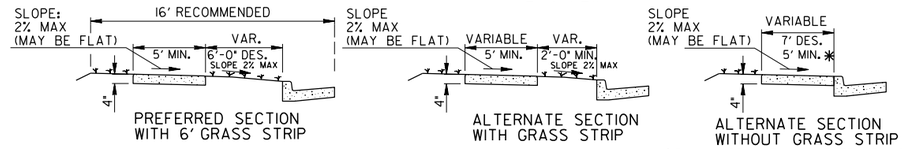

*5' MIN WIDTH WITH NO OBSTRUCTIONS (MAILBOXES, SIGNS, ETC)

7' DESIRABLE WIDTH WITH A 2' AREA OF CONTRASTING COLOR & TEXTURE ADJACENT TO THE CURB. (COST OF TEXTURE, COLORING & HOLES REQUIRED FOR MAILBOX AND SIGN POST SHALL BE INCLUDED IN THE PRICE BID FOR SIDEWALK)

NOTES FOR CONCRETE SIDEWALK:

A. CONCRETE TO BE PLACED 4" THICK AND FINISHED WITH TAMPS, WOOD FLOATS AND STIFF-BRISTLE BROOMS.
B. TRANSVERSE CONTRACTION JOINTS SHALL BE PLACED AT APPROXIMATE 5 FT. INTERVALS TO MAKE BLOCKS ROUGHLY SQUARE. ALL EDGES TO BE ROUNDED TO 1/4" RADIUS.
C. 1/2" EXPANSION JOINTS SHALL BE PLACED AT BEG. AND END OF CURVED SECTIONS OF SIDEWALK, WHERE SIDEWALKS TIE INTO A STRUCTURE, TERMINATE AT CURB, RAMPS OR DRIVEWAYS, AND AT 60' MAXIMUM INTERVALS.

Type A

(Perpendicular)

(The Preferred Ramp)

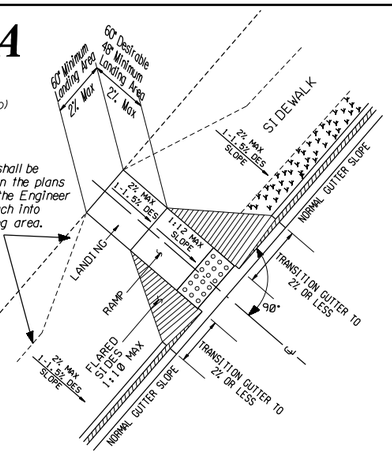

Back of sidewalk shall be located as shown in the plans or as directed by the Engineer so as not to encroach into the required landing area.

LENGTH REQUIRED FOR A 1:10 SLOPE	
DIFFERENCE IN HEIGHT	LENGTH REQUIRED
1 inch	10 inches
2 inches	1'-8"
3 inches	2'-6"
4 inches	3'-4"
5 inches	4'-2"
6 inches	5 feet

Type B

(Parallel; Blended when in radius)

(Normally used when space is not available for a landing at the top of a Type A Ramp)

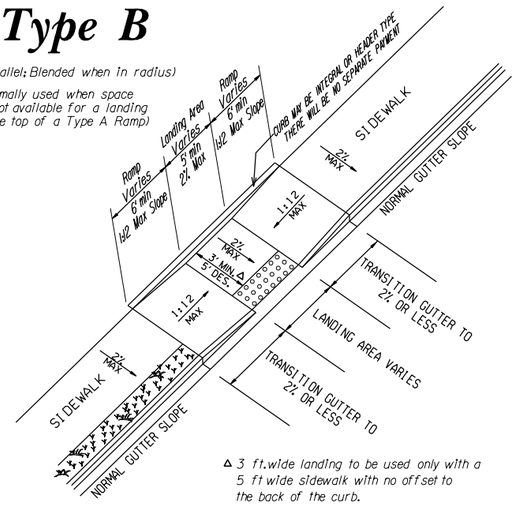

△ *3 ft. wide landing to be used only with a 5 ft wide sidewalk with no offset to the back of the curb.*

Type D

(Perpendicular)

(Normally used when the sidewalk ties directly into the crosswalk)

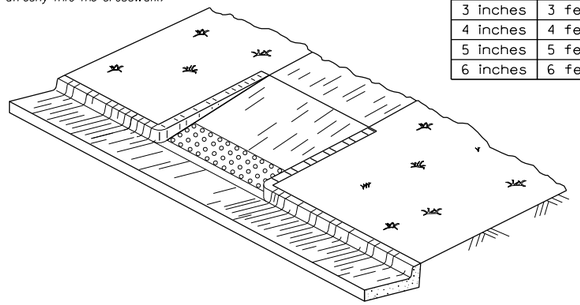

IN AREAS WHERE THE GUTTER HAS A SLOPE 1" IN 1' END NORMAL GUTTER SLOPE AT A DISTANCE OF 6 TO 10 FEET FROM THE RAMP AND BEGIN TRANSITION TO A FLAT GUTTER SLOPE. NORMAL GUTTER SLOPE SHALL BE RESUMED AT A SIMILAR DISTANCE BEYOND THE RAMP.

LENGTH REQUIRED FOR A 1:12 SLOPE	
DIFFERENCE IN HEIGHT	LENGTH REQUIRED
1 inch	1 foot
2 inches	2 feet
3 inches	3 feet
4 inches	4 feet
5 inches	5 feet
6 inches	6 feet

Type C

(Parallel)

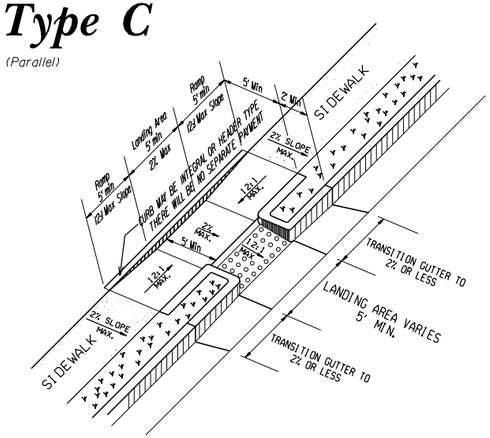

Skewed Ramp Details

(Applies to Type A and Type D Ramps Only)

WHEN THE RAMP CENTERLINE IS NOT PERPENDICULAR TO THE CURB A LEVEL LANDING AREA WITH SLOPES LESS THAN 2% MUST BE PROVIDED AT THE BOTTOM OF THE RAMP.

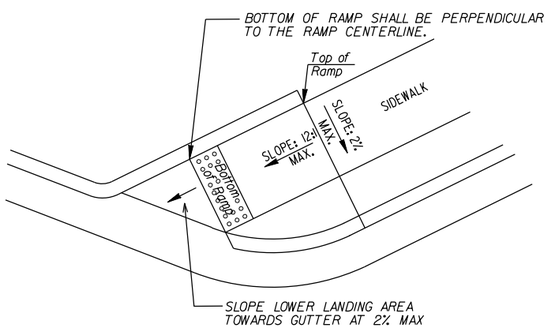

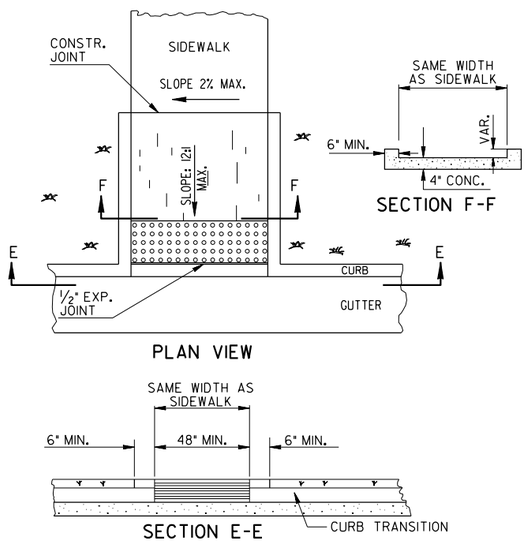

NOTES FOR CURB CUT RAMPS:

1. CURB CUT RAMPS WILL BE LOCATED AS FOLLOWS UNLESS PLANS OR CONTRACT SPECIFY OTHERWISE.
   a) AT ALL PEDESTRIAN CROSSWALKS WHERE CURB IS CONSTRUCTED OR REPLACED.
   b) WHERE THE SIDEWALK, CONCRETE OR UNPAVED, IS INTERRUPTED BY THE CURB AT TURNOUTS OR AT INTERSECTIONS.
   c) AT OTHER LOCATIONS SUCH AS HOSPITALS, NURSING HOMES, REST AREAS, ETC., WHERE THE CURB WOULD OTHERWISE BE AN OBSTRUCTION TO THE PHYSICALLY DISABLED.
2. RAMPS WILL BE CONSTRUCTED FROM CONCRETE. SPECIFICATIONS FOR RAMPS WILL BE THE SAME AS FOR CONCRETE SIDEWALK. RAMPS SHALL HAVE EITHER A ROUGH OR A TEXTURED FINISH.
3. DROP INLETS ARE NOT TO BE LOCATED DIRECTLY IN FRONT OF RAMPS. CATCH BASINS SHOULD BE LOCATED AT LEAST 10 FT. FROM RAMPS WHEN FEASIBLE.
4. WHERE RAMPS ARE LOCATED IN RADII, THE DIMENSIONS SHOWN FOR RAMP WIDTHS AND TAPERS ARE MEASURED PERPENDICULAR TO THE RAMP AND NOT ALONG THE CURVE.
5. WHERE UTILITY STRUCTURES CONFLICT, WHERE SIDEWALK GEOMETRY VARIES, AT SKEWED INTERSECTIONS, OR IN OTHER SPECIAL CASES, THE RAMP DESIGNS MAY BE MODIFIED BY THE DESIGNER OR ENGINEER, PROVIDED THAT THE WIDTH REMAINS A MINIMUM OF 48 INCHES, AND NO SLOPE ON THE ACCESSIBLE PART OF THE RAMP IS STEEPER THAN 12:1.
6. LIN. FT. OF CURB AND GUTTER WILL INCLUDE THE TRANSITIONED CURB IN FRONT OF RAMPS. SQ. YDS. OF CONCRETE SIDEWALK AND CONCRETE MEDIAN PAVING WILL INCLUDE RAMPS. NO ADDITIONAL PAYMENT WILL BE MADE FOR CURB RAMPS. NO ADDITIONAL PAYMENT WILL BE MADE FOR SAWING AND REMOVING EXISTING SIDEWALK OR CURB WHERE NECESSARY FOR RAMP CONSTRUCTION.
7. WHEN A CURB RAMP IS PLACED ON EXISTING PAVEMENT. THE PAVEMENT SHALL BE REMOVED TO PROVIDE A MINIMUM THICKNESS OF 3 INCHES OF CONCRETE AT ALL LOCATIONS. NO SEPARATE PAYMENT WILL BE MADE FOR REMOVAL OF THE PAVEMENT.
8. DETECTABLE WARNING SURFACES ARE REQUIRED ON ALL INTERSECTIONS WITH PUBLIC STREETS, SIGNALIZED COMMERCIAL DRIVEWAYS, AND COMMERCIAL DRIVEWAYS WITH AN AADT OF 25 VPD.

This Detail Replaces Ga Standard 9031W

Guidelines For Usage On Metric Projects

When these details are incorporated into plans and or projects that are being prepared or constructed in metric units, exact or precise conversion to metric units is not required. The dimensions shown that are in feet and inches may be converted to corresponding metric units using the following "Rounded-Off" conversion factors: 1" =25mm, 4"=100mm, and 12" or 1' =300mm. All measurement notes that refer to linear feet and square yards shall be interpreted to mean linear meters and square meters.

BY	DATE	REVISION
PJN	07-01-25	PROWAG, JOINTS, TP. D RAMP
CJB	9-15-16	ADDED PERP. OR PARALLEL
GLO	6-18-09	REV. SLOPES TO PERCENT AND ADDED 12:1 & 10:1 CHART.
	5-10-06	ADDED GEN. NOTE NO. 8.
GLO	2-21-03	REV. TRUNCATED DOMES
		REVISED
	2-10-03	REVISED

DEPARTMENT OF TRANSPORTATION
STATE OF GEORGIA

CONSTRUCTION DETAIL

CONCRETE SIDEWALK DETAILS

CURB CUT (WHEELCHAIR) RAMPS

MARCH 2002

NOT TO SCALE

NUMBER A-Ø3

1 OF 1

STATE	PROJECT NUMBER	SHEET NO.	TOTAL SHEETS
GA.			

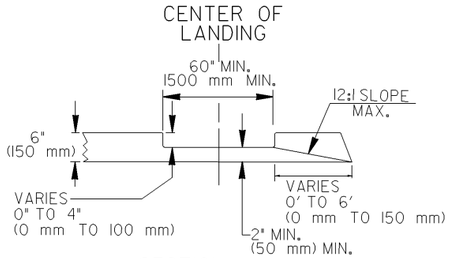

SECTION A-A

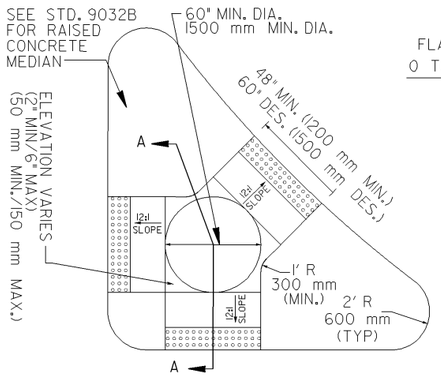

CONCRETE ISLAND WITH ELEVATED CUT THROUGH

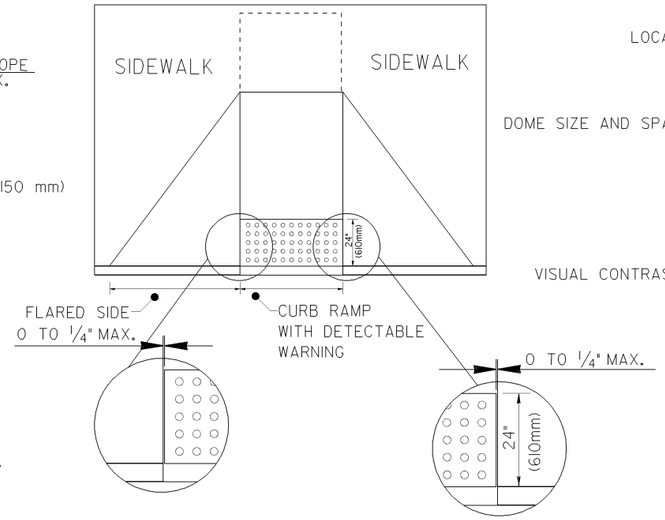

SIZE: DETECTABLE WARNINGS SHALL BE 24 INCHES (610 mm) IN THE DIRECTION OF PEDESTRAIN TRAVEL AND EXTEND THE FULL WIDTH OF THE CURB RAMP OR FLUSH SURFACE.

LOCATION: THE DETECTABLE WARNING SHALL BE LOCATED SO THAT THE EDGE NEAREST THE CURB LINE OR OTHER POTENTIAL HAZARD IS 6 TO 8 INCHES (150 mm +to 180mm) FROM THE CURB LINE OR OTHER POTENTIAL HAZARD, SUSH AS A REFLECTIVE POOL EDGE OR THE DYNAMIC ENVELOPE OF RAIL OPERATIONS.

DOME SIZE AND SPACING: TRUNCATED DOMES SHALL HAVE A BASE DIAMETER OF 0.9 INCH TO 1.4 INCH (23mm-36mm) AT THE BOTTOM, A DIAMETER OF 0.45 INCH TO 0.91INCH (11mm-23mm) AT THE TOP, THE TOP DIAMETER SHALL BE A MINIMUM OF 50% AND A MAXIMUM OF 65% OF THE BASE DIAMENTER, A HEIGHT OF 0.2 INCH (5.1mm) AND A CENTER-TO-CENTER SPACING OF 2.40 INCHES (61mm) DESIRABLE 1.60 INCHES (41mm) MINIMUM MEASURED ALONG ONE SIDE OF A SQUARE ARRANGEMENT. DOMES SHALL HAVE A SQUARE ARRANGEMENT. DOMES SHALL BE ALIGNED ON A SQUARE GRID IN THE PREDOMINANT DIRECTION OF TRAVEL TO PERMIT WHEELS TO ROLL BETWEEN DOMES.

VISUAL CONTRAST: DETECTABLE WARNING SURFACES SHALL CONTRAST VISUALLY WITH THE ADJACENT WALKING SURFACE EITHER LIGHT-ON-DARK OR DARK-ON-LIGHT. THE MATERIAL USED TO PROVIDE VISUAL CONTRACT SHALL BE AN INTEGRAL PART OF THE DETECTABLE WARNING SURFACE.

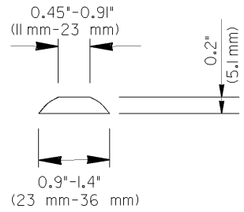

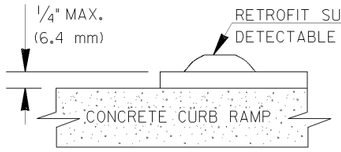

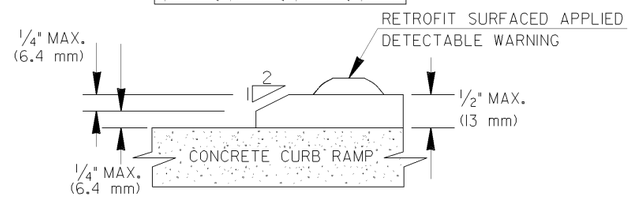

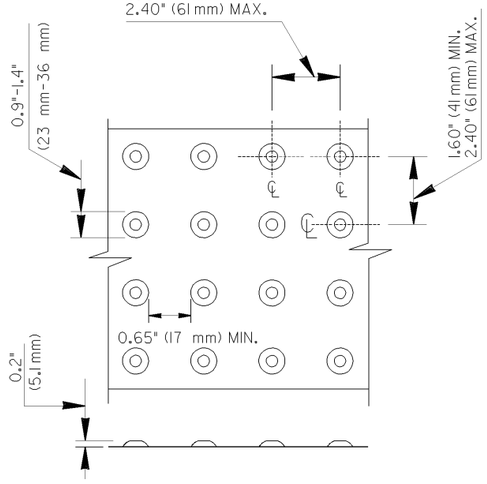

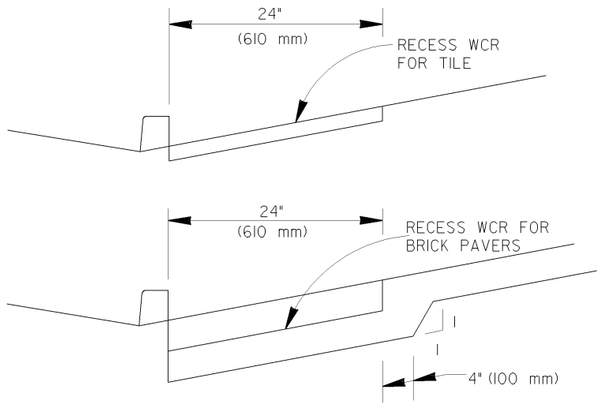

FOR TILE OR BRICK PAVERS NO VERTICAL LIP OVER 1/8" (3 mm) IS ALLOWED

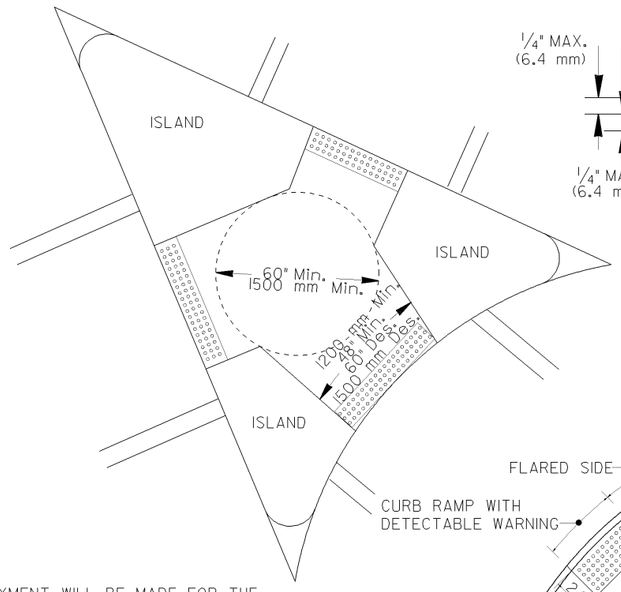

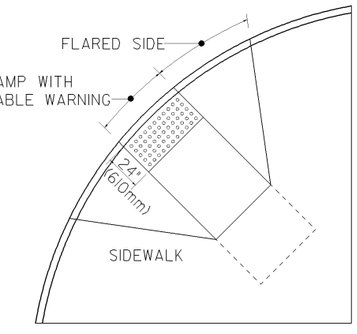

DETAIL FOR DETECTABLE WARNING AT CUT-THRU CONCRETE ISLAND

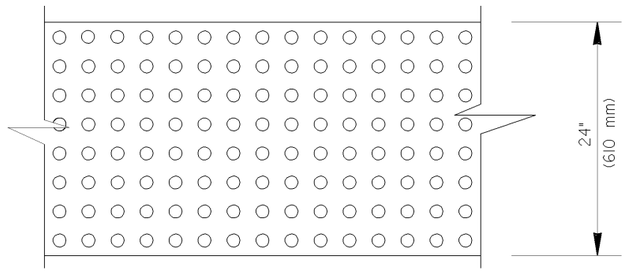

NO SEPARATE PAYMENT WILL BE MADE FOR THE DETECTABLE WARNINGS. THE COST SHALL BE INCLUDED IN THE PRICE BID FOR SIDEWALK (OR CURB CUT RAMP IF THE ITEM IS INCLUDED IN THE PROPOSAL).

FOR CUT-THRU ISLANDS AND EXISTING RAMPS, WHERE NO SIDEWALK OR CURB CUT RAMPS ARE IN THE PROPOSAL. THE COST OF THE DETECTABLE WARINGS SHALL BE INCLUDED IN THE OVERALL BID PRICE SUBMITTED.

MATERIALS:

NEW CONSTRUCTION

THE DETECTABLE WARNINGS SHALL BE MADE OF MATERIALS SPECIFIED ON QPL 87.

RETROFIT OF EXISTING RAMPS

SURFACED APPLIED MATERIALS WILL ONLY BE APPROVED TO BE USED ON EXISTING WHEELCHAIR RAMPS.

INSTALLATION:

BRICK PAVERS SHALL BE SET IN A WET MORTAR BED. THE BED SHALL BE PLACED ON CONCRETE. THE CONCRETE SHALL BE A MINIMUM OF 4" THICK.

CERAMIC TILE SHALL BE EPOXIED IN PLACE OR SET IN A WET MORTAR BED. MANUFACTURER RECOMMEND ADHESIVE OR FASTENER SHALL BE USED IN THE INSTALLATION.

ALL OTHER MATERIALS SHALL BE INSTALLED ACCORDING TO MANUFACTURES DETAILS OR INSTRUCTION.

GENERAL NOTES:

RETROFIT SURFACED APPLIED MATERIALS ONLY:

1. CHANGES IN LEVEL OF 1/4" (6.4 mm) HIGH MAXIMUM SHALL BE PERMITTED VERTICALLY ON SURFACED APPLIED MATERIALS.
2. CHANGES IN LEVEL BETWEEN 1/4" (6.4 mm) HIGH MINIMUM AND 1/2" (13mm) HIGH MAXIMUM SHALL BE BELEVELED WITH A SLOPE NOT STEEPER THAN 2:1.

BY	REVISION	DATE
GLO	ADDED RETROFIT DETAIL AND ADDED ALT. RAMP DETAIL AND GEN. NOTES	6-18-09
GLO	ADDED TOLERANCE TO DTL. REVISED TRUNCATED DOMES AND NOTES.	10-2-06
	REVISED	11-14-02
	REVISED	7-29-02

DEPARTMENT OF TRANSPORTATION
STATE OF GEORGIA

SPECIAL DETAIL

DETECTABLE WARNING SURFACE TRUNCATED DOME SIZE, SPACING AND ALIGNMENT REQUIREMENTS

NO SCALE

MARCH 12, 2002

NUMBER A-04

STATE	PROJECT NUMBER	SHEET NO.	TOTAL SHEETS
GA.			

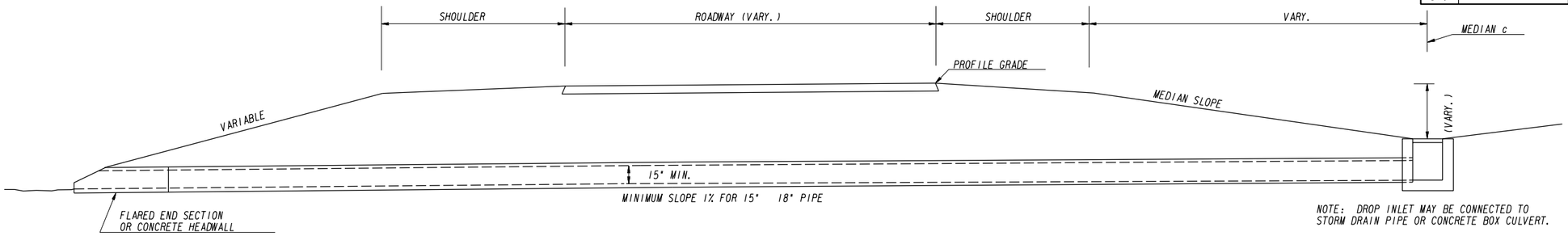

USE ON CONTINUOUS GRADES

SLOPE	ELBOW ANGLE ∝
2:1	26°p
FLATTER THAN 2:1	14°p

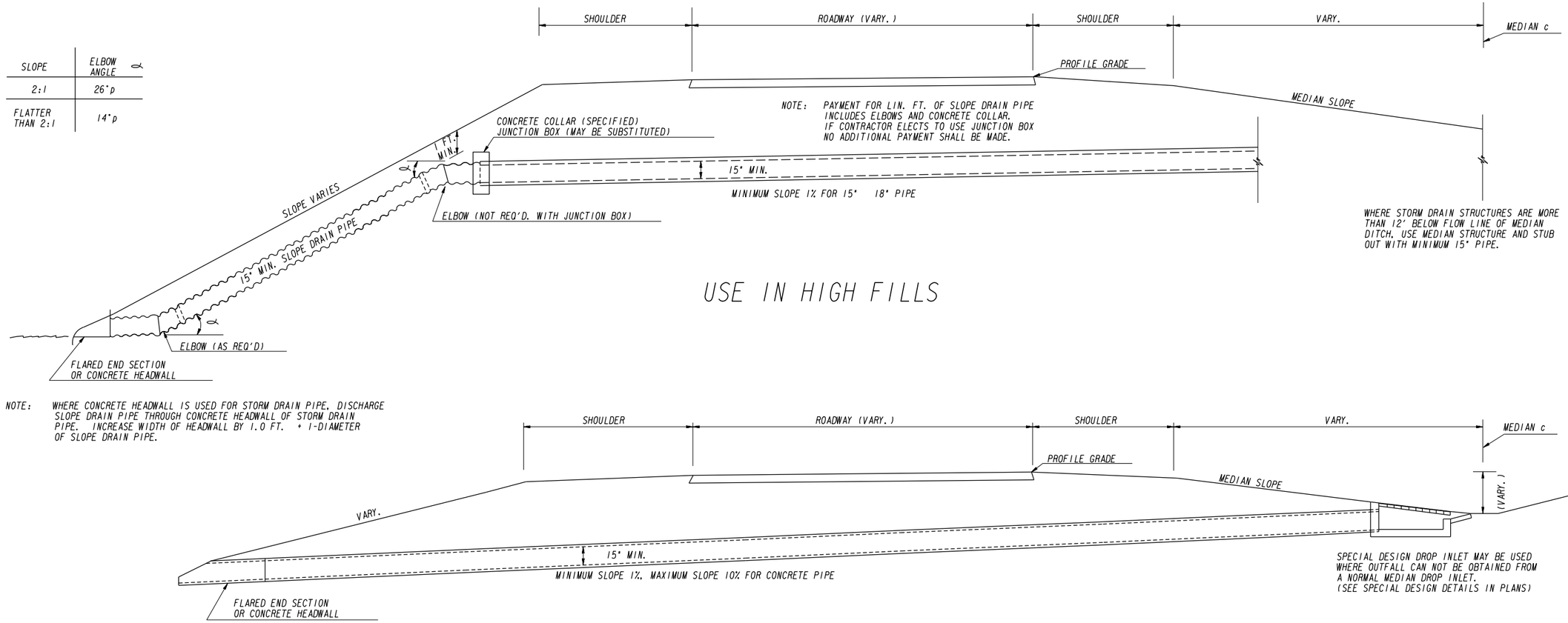

USE IN HIGH FILLS

NOTE: WHERE CONCRETE HEADWALL IS USED FOR STORM DRAIN PIPE, DISCHARGE SLOPE DRAIN PIPE THROUGH CONCRETE HEADWALL OF STORM DRAIN PIPE. INCREASE WIDTH OF HEADWALL BY 1.0 FT. + 1-DIAMETER OF SLOPE DRAIN PIPE.

USE IN PROFILE SAG

BY	REVISION	DATE
R.M.U.	GEN. REV.	2-11-88
J.M.W.	CONC. COLLAR 1% SLOPE	12-9-76
	END SECTION	3-28-74

DEPARTMENT OF TRANSPORTATION
STATE OF GEORGIA

CONSTRUCTION DETAILS

MEDIAN DRAIN DROP INLETS

NOT TO SCALE

DESIGNED JLP
DRAWN JMW
TRACED AVS
CHECKED HR

NUMBER
D-01

GDOT Georgia Department of Transportation | P. I. No. XXXXXXX

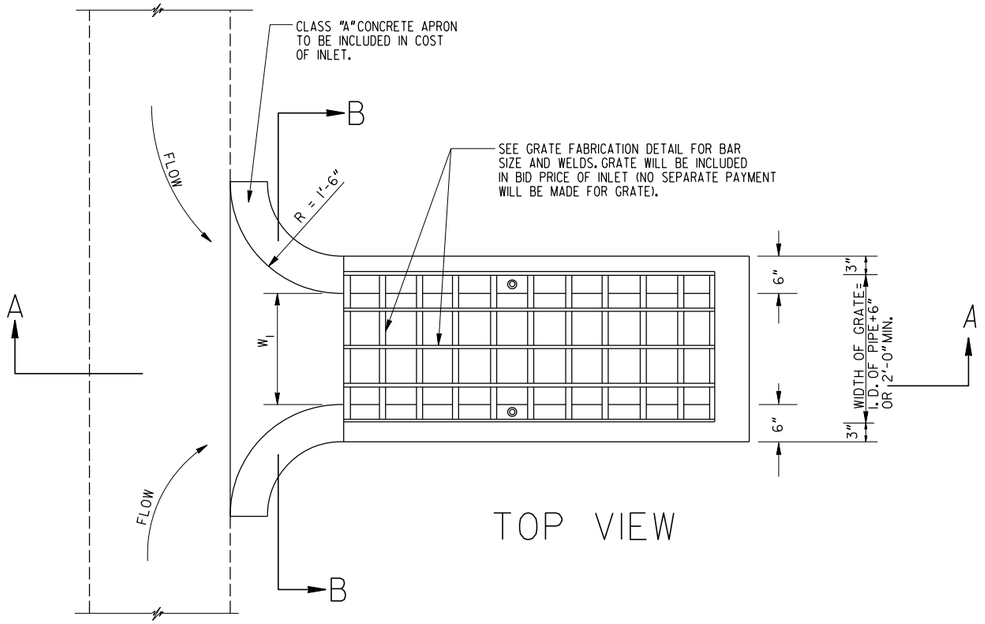

TOP VIEW

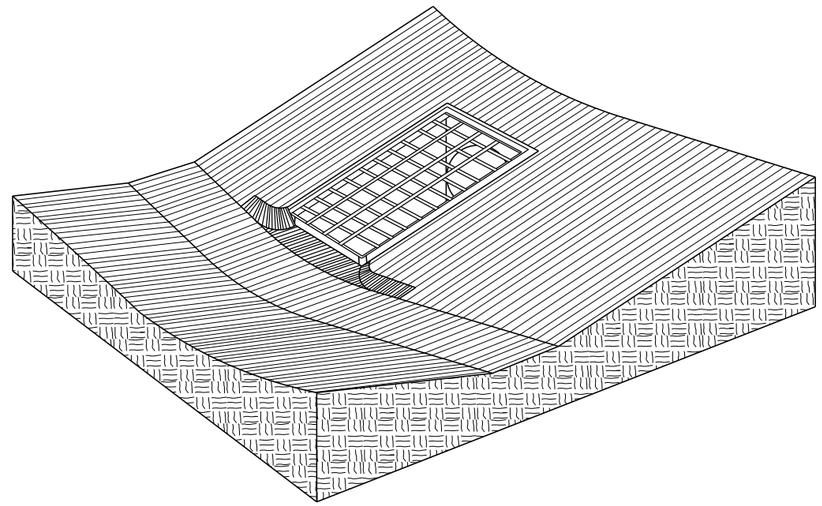

NO SCALE

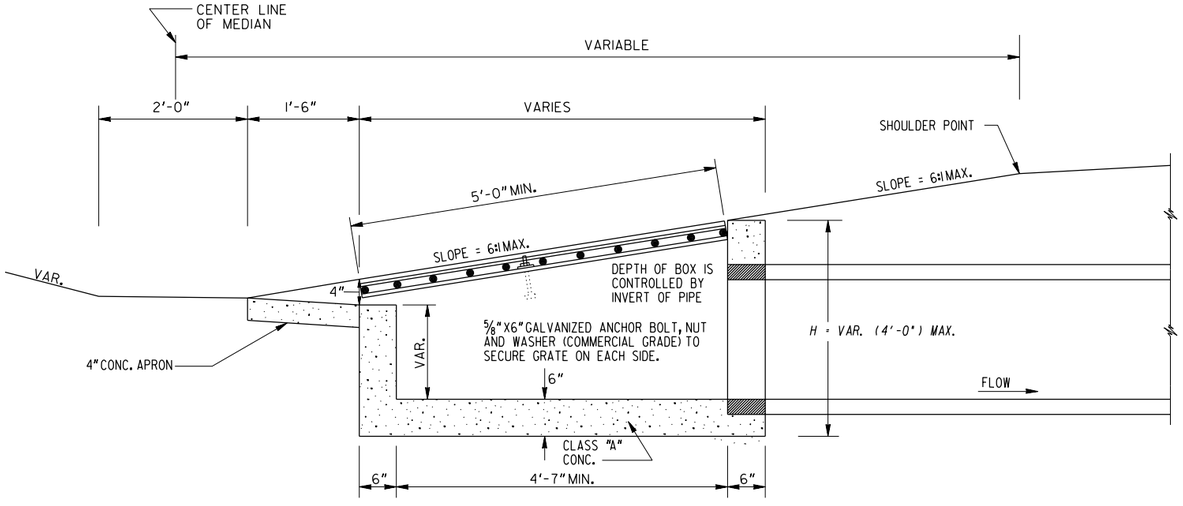

SECTION A-A

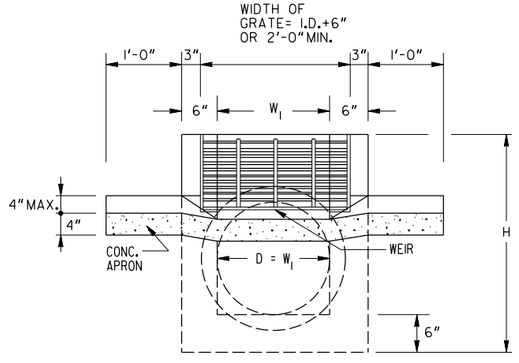

SECTION B-B

	2-12-74	DATE	DEPARTMENT OF TRANSPORTATION STATE OF GEORGIA
	NOTE ADDED	REVISION	CONSTRUCTION DETAIL MEDIAN DRAIN DROP INLET SPECIAL DESIGN *(FOR USE IN LOW POINT IN MEDIAN WHERE OUTFALL IS NOT SUFFICIENT TO USE NORMAL DROP INLET)*
	WFB	BY	MARCH 1971 NOT TO SCALE NUMBER D-03

STATE	PROJECT NUMBER	SHEET NO.	TOTAL SHEETS
GA.			

NOTE: MIN. 'H' IS BASED ON TYPICAL OUTSIDE DIAMETER OF CONCRETE PIPES AND MAY BE REDUCED SLIGHTLY WHERE SPECIFIED IN THE PLANS, OR AS DIRECTED BY THE ENGINEER.

PIPE SIZE	MIN.(*) H	NORMAL W	75° SKEW W	60° SKEW W	45° SKEW W	MIN. H, IF CIRCULAR ALTER. (STD. 1040) IS USED
15"	3'-0"	2'-0"	2'-0"	2'-6"	3'-0"	3'-10"
18"	3'-6"	2'-6"	2'-6"	3'-0"	3'-6"	4'-3"
24"	4'-0"	3'-0"	3'-0"	3'-6"	4'-0"	4'-9"
30"	4'-6"	3'-6"	4'-0"	4'-0"	5'-0"	6'-2"
36"	5'-0"	4'-0"	4'-6"	5'-0"	6'-0"	6'-9"
42"	5'-6"	5'-0"	5'-0"	5'-6"	6'-6"	7'-4"
48"	6'-0"	5'-6"	5'-6"	6'-0"	7'-6"	7'-11"

(*) FOR LONGITUDINAL PIPE OVER 18" WITH A 2'-0" DITCH, OR A LONGITUDINAL PIPE OVER 36" WITH A 4'-0" DITCH, AN ENLARGED BASE IS REQUIRED TO W_1 = DITCH WIDTH WITH APPLICABLE MIN. H IN COLUMN AT EXTREME RIGHT.

PICTORIAL VIEW

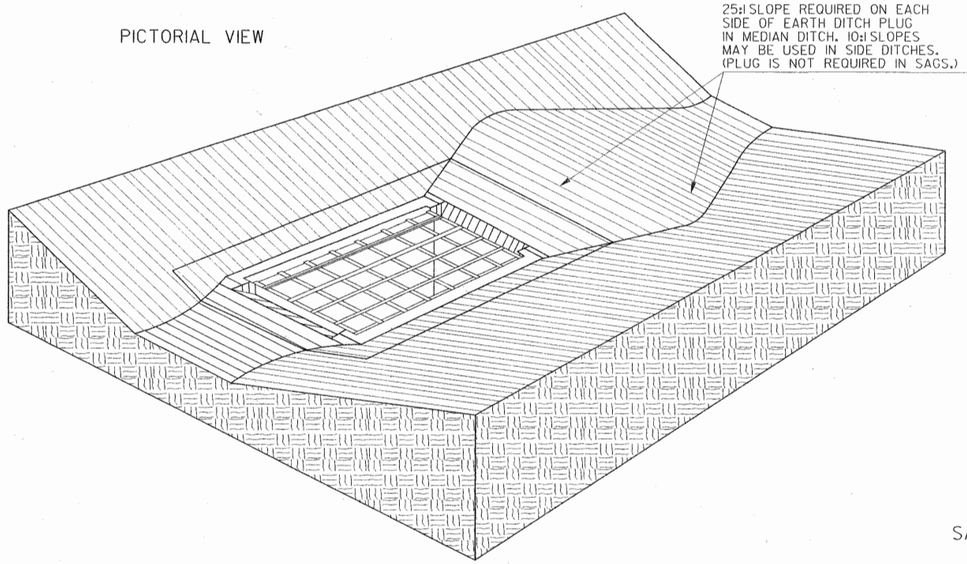

DROP INLET WITH CIRCULAR BASE			
OULET PIPE	ADAPTOR	W X W_1	GRATE SIZE (L. X W.)
TO 18"	TP. 3	2'-0" X 2'-0"	2'-0" X 2'-6"
TO 30"	TP. 2	3'-0" X 2'-0"	3'-0" X 2'-6"

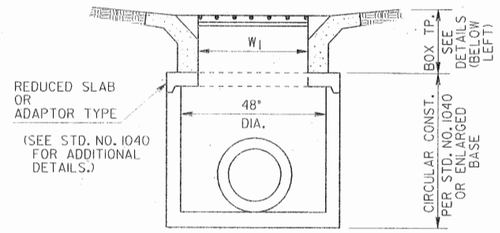

SECTION B-B FOR: CIRCULAR ALTERNATE OR ENLARGED BASE

$\frac{1}{2}$" X 6" GALV. ANCHOR BOLT,* NUT AND WASHER-STANDARD LOCATION IS APPROX. CENTER OF GRATE WITH ONE BOLT EACH SIDE.

SEE GRATE FABRICATION DETAILS FOR BAR SIZES, ANGLE IRON SIZE AND WELDING DETAILS. GRATE WILL BE INCLUDED IN PAYMENT OF INLET. (NO SEPARATE PAYMENT WILL BE MADE FOR GRATE.)

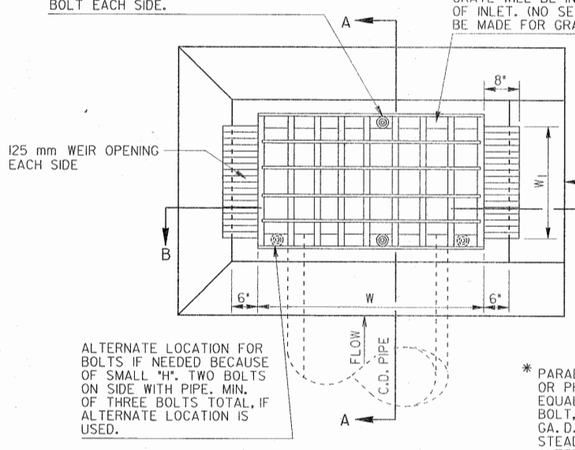

CLASS "A" CONCRETE APRON (INCLUDED IN COST OF INLET)

ALTERNATE LOCATION FOR BOLTS IF NEEDED BECAUSE OF SMALL "H". TWO BOLTS ON SIDE WITH PIPE. MIN. OF THREE BOLTS TOTAL, IF ALTERNATE LOCATION IS USED.

PLAN VIEW

* PARABOLT CONC. ANCHOR BOLTS (P BI2-514) OR PHILLIPS RED HEAD (WW-1254), OR AN EQUAL $\frac{1}{2}$" DIA. GALVANIZED ANCHOR TYPE BOLT, WHICH HAS BEEN APPROVED BY THE GA. D.O.T. LABORATORY MAY BE USED INSTEAD OF THE BOLT SHOWN. ALL SUCH ALTERNATES ARE TO BE INSTALLED AS RECOMMENDED BY THE MANUFACTURER.

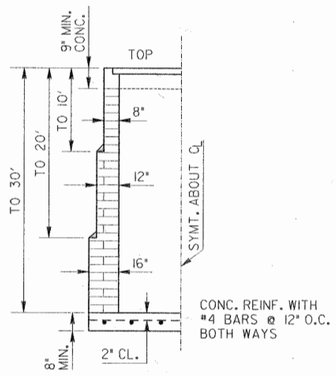

CONC. REINF. WITH #4 BARS @ 12" O.C. BOTH WAYS

DETAIL OF DEPTH LIMITS FOR BRICK WALL THICKNESS

SAFETY GRATE FABRICATION DETAILS

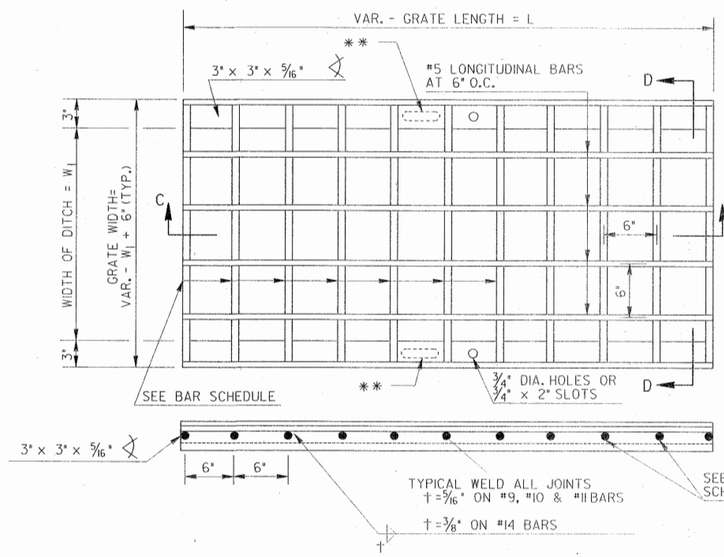

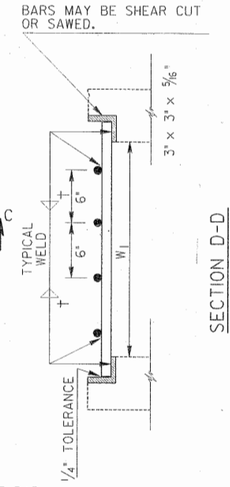

SECTION D-D

BAR SCHEDULE FOR GRATE		
W_1	GRATE TYPE	BAR SIZE
1'-6" TO 2'-0"	1	#9
2'-6"	2	#10
3'-0" TO 3'-6"	3	#11
4'-0" TO 4'-6"	4	#14

** ALTERNATE: INSTEAD OF 3/4" DIAMETER HOLE, A 2" x 3/4" OVAL HOLE MAY BE PROVIDED.

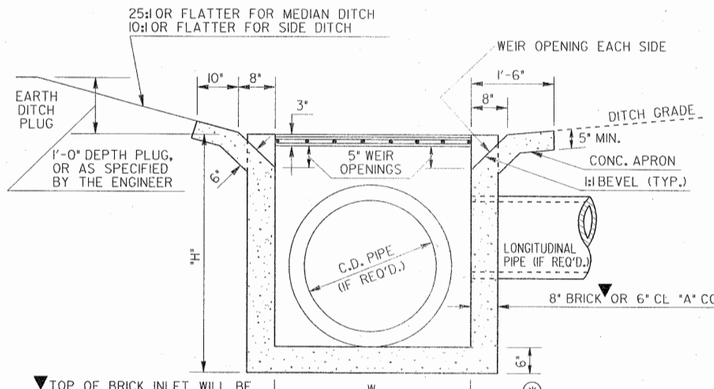

▼TOP OF BRICK INLET WILL BE FINISHED WITH CL "A" CONCRETE 9" MINIMUM. 8" BRICK THICKNESS WILL BE INCREASED FOR 'H' OVER 10 FT. (SEE DETAIL IN MIDDLE OF SHT.)

SECTION B-B

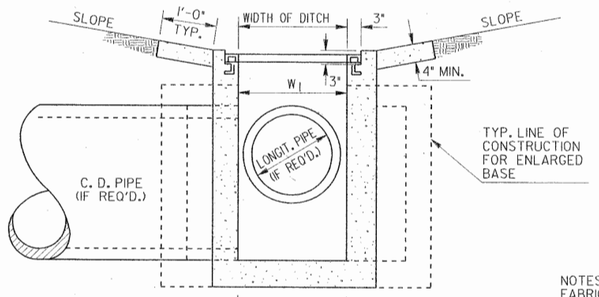

SECTION A-A

(*) CONCRETE INLET MAY BE PRECAST OR BUILT-IN-PLACE. ALL PRECAST INLETS AND ANY CAST-IN-PLACE CONC. INLETS WITH "H" OVER 4'-6" WILL BE REINFORCED IN ALL SIDES & BOTTOM. REINFORCING FOR BOX INLET WILL BE EITHER #4 BARS AT 12" O.C. BOTH WAYS OR 2/2, 6x6 WELDED WIRE FABRIC. ALL REINFORCING WILL HAVE 2" MIN. COVER.

NOTES FOR GRATE:
FABRICATOR WILL ARRANGE FOR TESTING BY THE GA. D.O.T. LABORATORY 14 DAYS PRIOR TO FABRICATION.

ALL BARS SHALL MEET THE REQUIREMENTS OF AASHTO M 31 GRADE 60.

ALL LONGITUDINAL BARS WILL BE #5 BARS.

GRATE BAR SPACINGS SHOWN ARE "NOMINAL-MINIMUM" AND MAY BE INCREASED (UP TO 10% TYPICAL) WITH NO ADDITIONAL PAYMENT TO PROVIDE BEST FIT FOR STRUCTURE.

DEPARTMENT OF TRANSPORTATION
STATE OF GEORGIA

CONSTRUCTION DETAILS
DITCH DROP INLET WITH FABRICATED SAFETY GRATE AND WEIR OPENINGS

NO SCALE — OCT., 2000

DATE / REVISION / BY

DES. _____ (SUBMITTED) _____ STATE ROAD & AIRPORT DESIGN ENGR.
DRW. _____
TRA. _____ (APPROVED) _____ CHIEF ENGINEER
CHK. _____

NUMBER D-04

STATE	PROJECT NUMBER	SHEET NO.	TOTAL SHEETS
GA.			

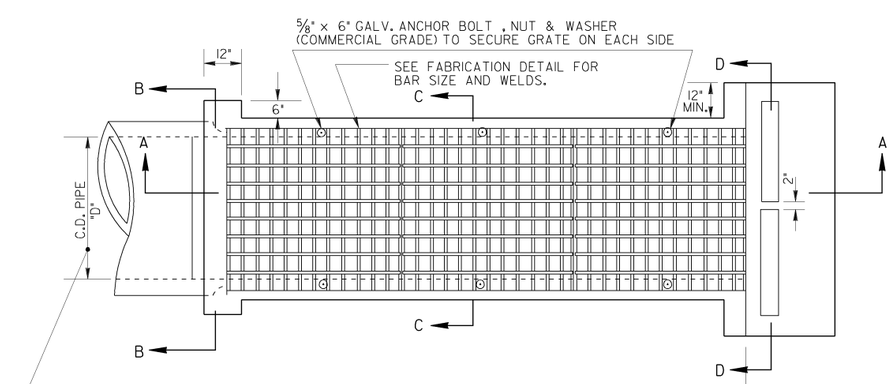

PLAN VIEW

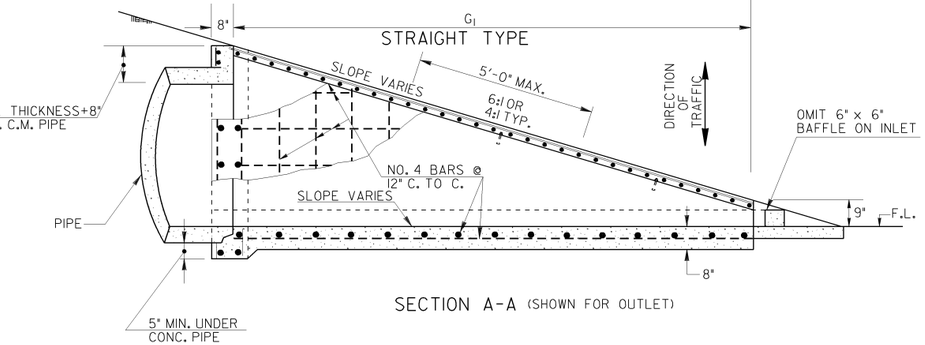

SECTION A-A (SHOWN FOR OUTLET)

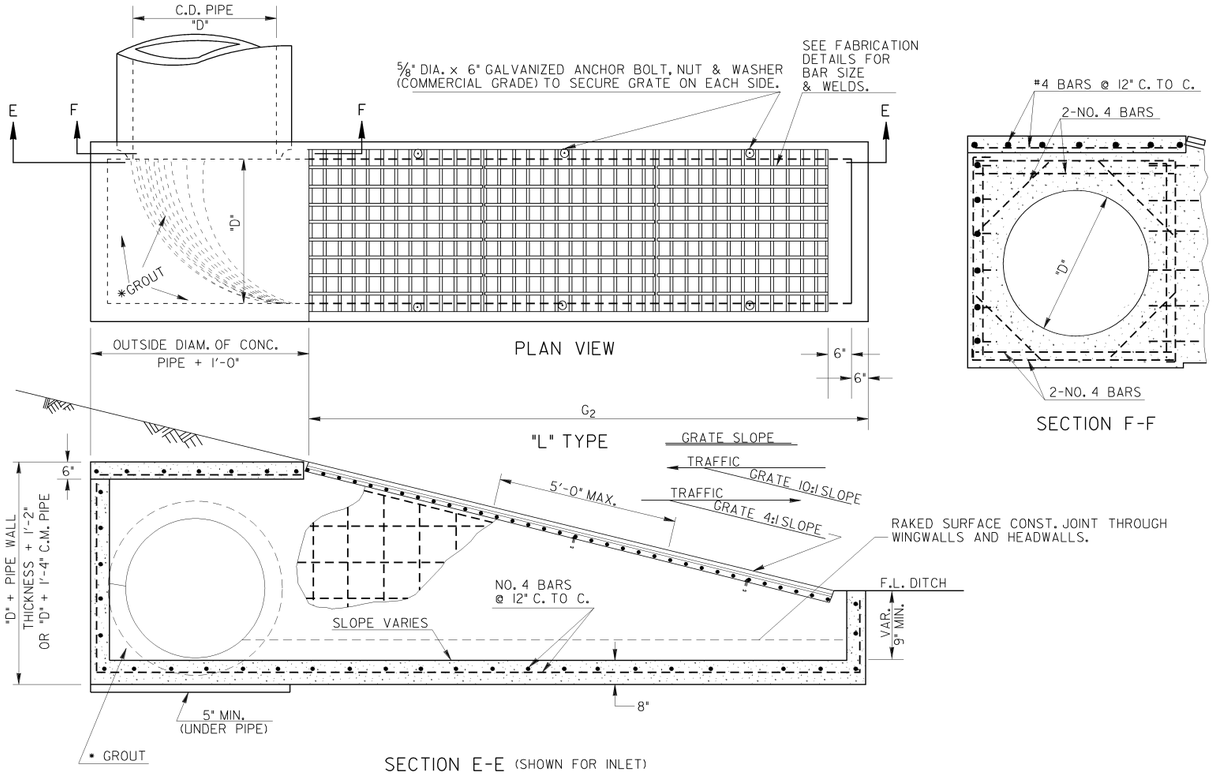

PLAN VIEW

SECTION F-F

SECTION E-E (SHOWN FOR INLET)

NOTE: A MAXIMUM TRANSVERSE SPACE OF 3" IS PERMITTED BETWEEN ABUTTING GRATE SECTIONS.

MINIMUM LENGTH OF GRATE **		
SIZE	G_1	G_2
15"	6'-0"	8'-0"
18"	7'-0"	9'-0"
24"	9'-6"	11'-6"
30"	11'-6"	13'-6"
36"	14'-0"	15'-6"
42"	16'-0"	18'-0"
48"	18'-0"	20'-0"

** TYPICAL FOR 4:1 SLOPES

NOTE:

• GROUT IS TO MEET THE REQUIREMENTS OF SECTION 834.

SPECIAL NOTE:

TYPICAL USE OF THESE STRUCTURES IS WHERE THE ENDS OF STORM DRAIN PIPES UNDER THE MAINLINE FALL INSIDE THE CLEAR ZONE.

FOR DETAILS OF SAFETY END SECTIONS (FOR SIDE DRAIN PIPE OR STORM DRAIN PIPE PARALLEL TO MAINLINE), SEE SEPARATE DETAILS.

SUMMARY OF QUANTITITES				
CULV'T DIAM. INCHES	STRAIGHT TYPE		'L" TYPE	
	CONC. CU.YDS.	REINF. STEEL LBS.	CONC. CU.YDS.	REINF. STEEL LBS.
15"	0.96	71	1.49	136
18"	1.07	75	1.87	142
24"	1.93	111	2.69	197
30"	2.52	179	3.63	248
36"	3.30	220	5.07	315
42"	3.90	298	6.10	427
48"	4.90	353	7.28	510

BASIS OF PAYMENT:

HEADWALL - CU. YDS. OF CONC. INCLUDING REINF. STEEL

GRATE-SAFETY GRATE TYPE _____ SQUARE FEET

NOTE: QUANTITIES ARE TYPICAL FOR 4:1 SLOPE.

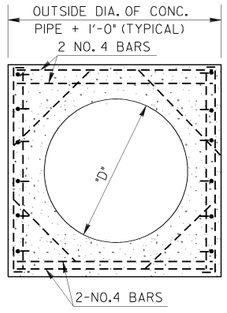

SECTION B-B

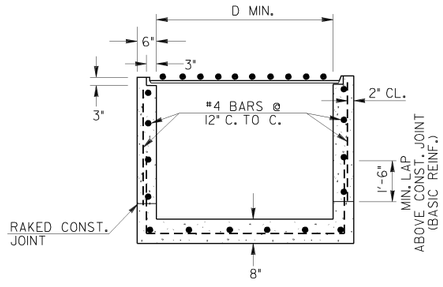

SECTION C-C

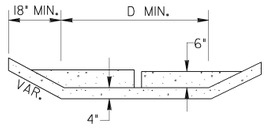

SECTION D-D

	DATE	REVISION	BY
	6-21-95	GEN. REVISION	R.M.U.
	10-4-12	GRATE SLOPE	J.L.P.
	4-20-12	ANCHOR BOLTS	J.L.P.
	3-1-11	GRATE REVISED	J.L.P.

DEPARTMENT OF TRANSPORTATION
STATE OF GEORGIA

CONSTRUCTION DETAILS
- HEADWALLS - SAFETY INLETS WITH GRATES

SCALE: 1/2"=1'-0" JULY, 1970

DESIGNED J.L.P.
DRAWN J.M.W.
TRACED A.V.S.
CHECKED H.R.

NUMBER D-05

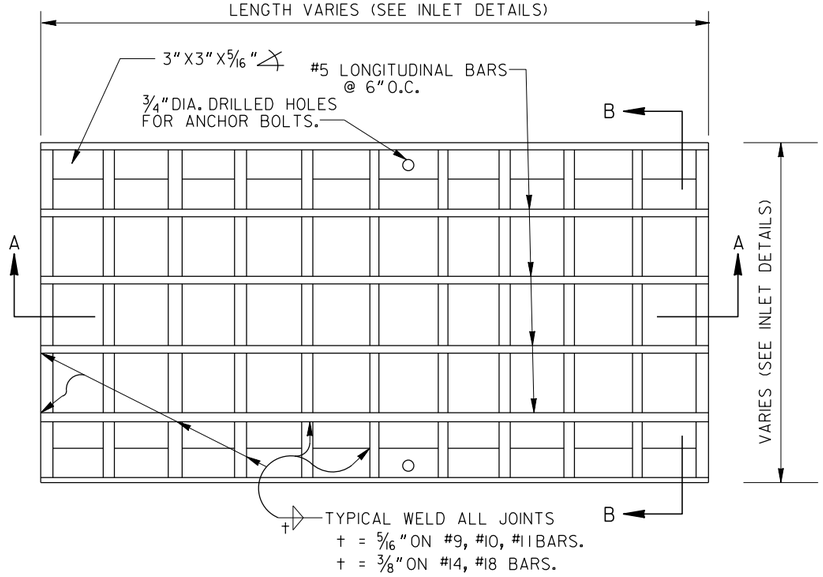

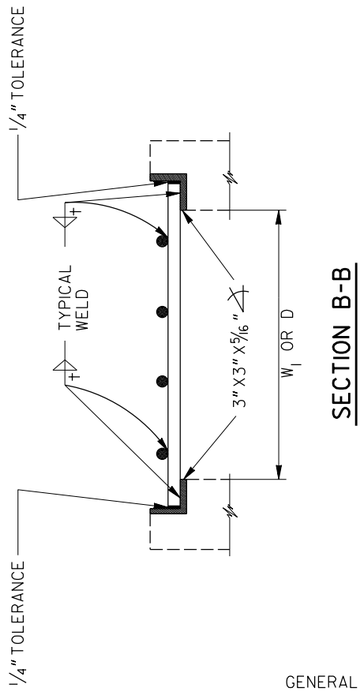

SECTION B-B

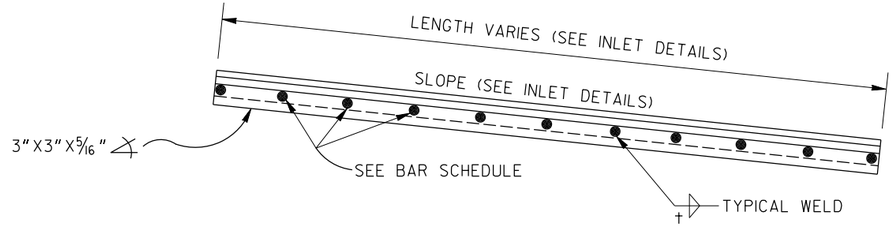

SECTION A-A

BAR SCHEDULE			
GRATE TYPE	BAR SIZE	SPACING	W_1 OR D
1	#9	6"O.C.	1'-6" TO 2'-0"
2	#10	6"O.C.	2'-6"
3	#11	6"O.C.	3'-0" TO 3'-6"
4	#14	6"O.C.	4'-0"
5	#18	6"O.C.	+4'-0" TO 6'-0"

BASIS OF PAYMENT:
SAFETY GRATE TYPE _____ SQ. FT.

GENERAL NOTES:

1. FABRICATOR WILL ARRANGE FOR TESTING BY STATE D.O.T. MATERIALS LABORATORY 14 DAYS PRIOR TO FABRICATION.

2. ALL BARS SHALL MEET THE REQUIREMENTS OF AASHTO M 31-68I GRADE 60.

3. BARS MAY BE SHEAR CUT OR SAWED.

4. ALL HORIZONTAL BARS SHALL BE #5 @ 6"O.C.

DATE	REVISION	BY
10-1-1972	REVISED AND REDRAWN	JLP

DEPARTMENT OF TRANSPORTATION
STATE OF GEORGIA

CONSTRUCTION DETAIL

SAFETY GRATES FABRICATION DETAILS

(ALL KINDS AND SIZES)

OCTOBER 1972
NOT TO SCALE

NUMBER D-06

GDOT Georgia Department of Transportation | P. I. No. XXXXXXX

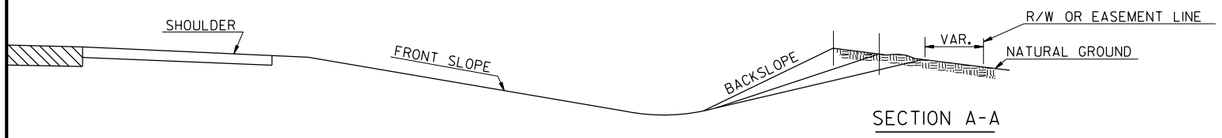

SECTION A-A

NORMAL DITCH SECTION

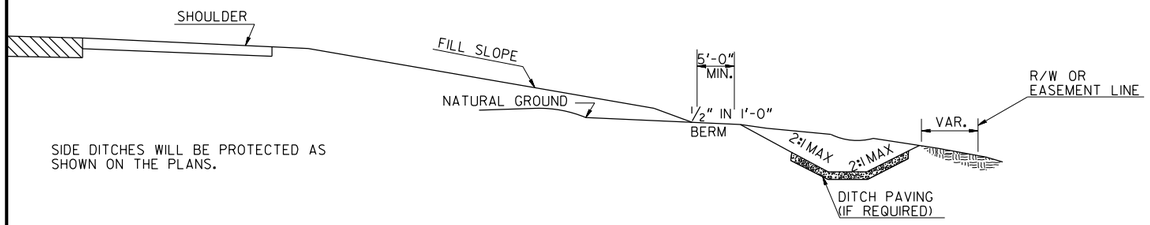

SIDE DITCHES WILL BE PROTECTED AS SHOWN ON THE PLANS.

SECTION B-B

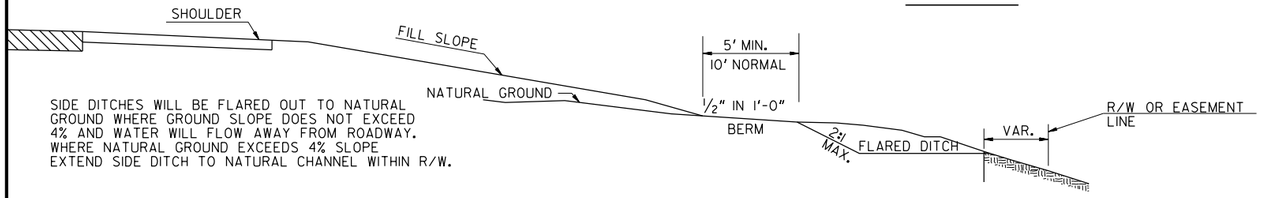

SIDE DITCHES WILL BE FLARED OUT TO NATURAL GROUND WHERE GROUND SLOPE DOES NOT EXCEED 4% AND WATER WILL FLOW AWAY FROM ROADWAY. WHERE NATURAL GROUND EXCEEDS 4% SLOPE EXTEND SIDE DITCH TO NATURAL CHANNEL WITHIN R/W.

SECTION C-C

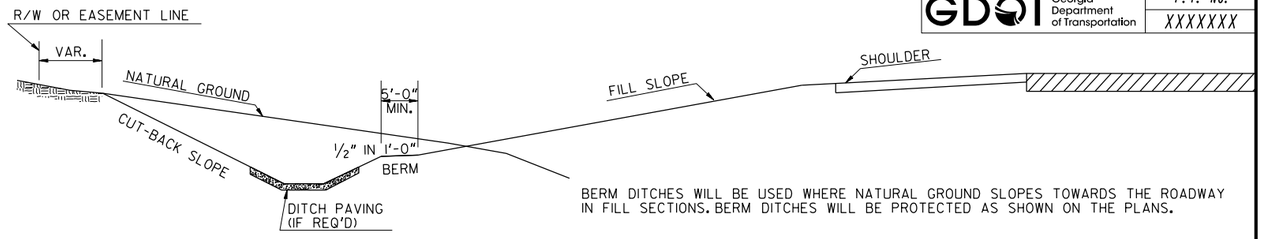

BERM DITCHES WILL BE USED WHERE NATURAL GROUND SLOPES TOWARDS THE ROADWAY IN FILL SECTIONS. BERM DITCHES WILL BE PROTECTED AS SHOWN ON THE PLANS.

SECTION D-D

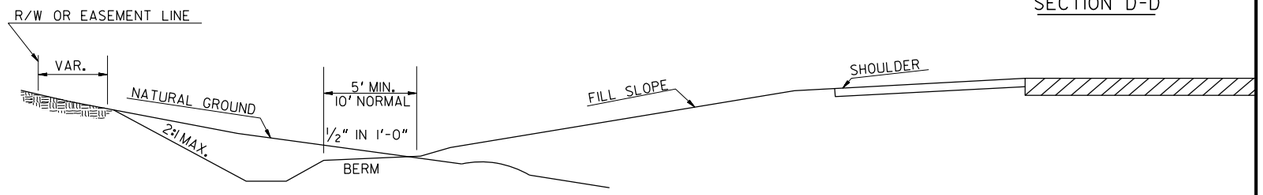

SOD DITCH CHECKS WILL BE USED IN BERM DITCHES ON GRADES OF 2.1% OR OVER AS SHOWN ON THE PLANS.

SECTION E-E

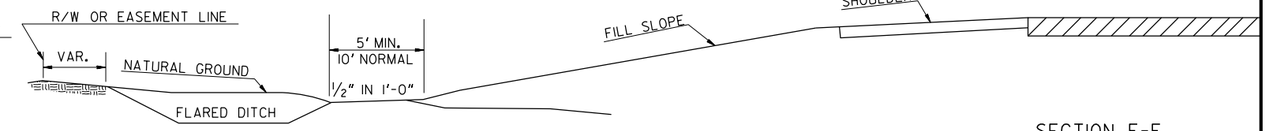

UNPAVED BERM DITCHES WILL BE FLARED OUT TO NATURAL GROUND AT INLETS OF CROSS DRAINS.

SECTION F-F

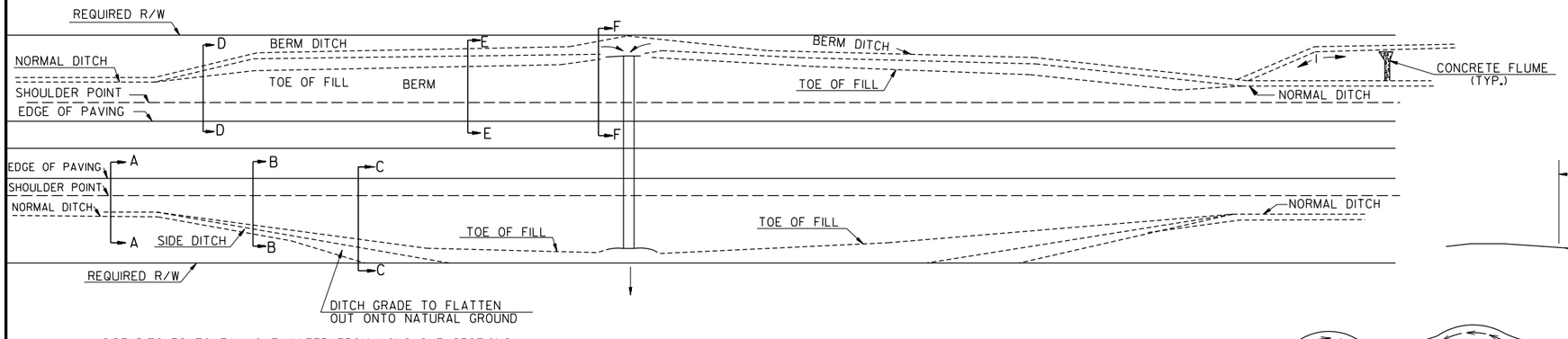

SIDE DITCHES TO TAIL OUT WATER FROM LONG CUT SECTIONS WILL BE PROTECTED AS DESIGNATED ON THE PLANS OR AS DIRECTED BY THE ENGINEER.

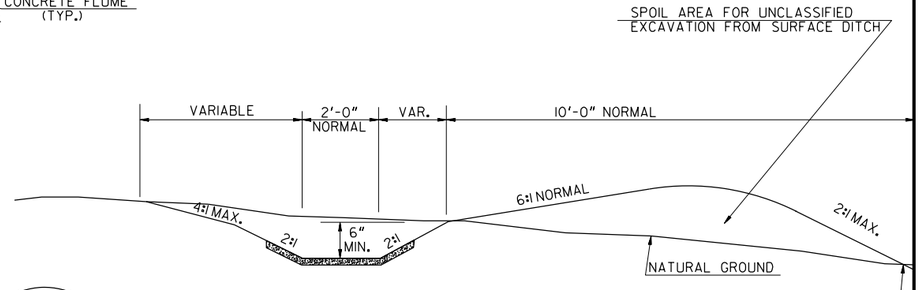

DETAIL OF SURFACE DITCHES

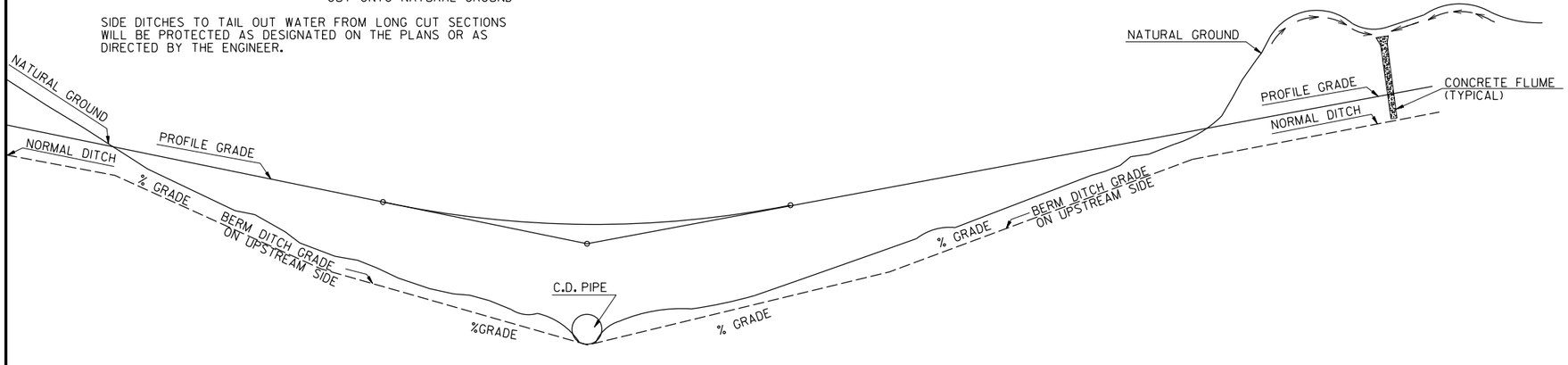

NOTE:
SURFACE DITCHES WILL BE REQUIRED AT THE TOP OF CUT SLOPES WHERE SHOWN ON THE PLANS OR WHERE IT IS DETERMINED BY THE ENGINEER ON CONSTRUCTION THAT THEIR USE IS ESSENTIAL IN GENERAL. SURFACE DITCHES WILL BE REQUIRED WHERE THE SLOPE OF THE NATURAL GROUND AT THE TOP OF THE CUT DRAINS TOWARDS THE ROADWAY AND THE MATERIAL IN THE BACK SLOPE IS SUBJECT TO EROSION. SURFACE DITCHES ARE TO BE PROTECTED AS SHOWN ON PLANS.

DEPARTMENT OF TRANSPORTATION
STATE OF GEORGIA

CONSTRUCTION DETAIL

BERM DITCHES, SIDE DITCHES, AND SURFACE DITCHES

DATE | REVISION | BY

JULY 1980

NOT TO SCALE

NUMBER D-07

GDOT Georgia Department of Transportation | P. I. No. XXXXXXX

PLAN

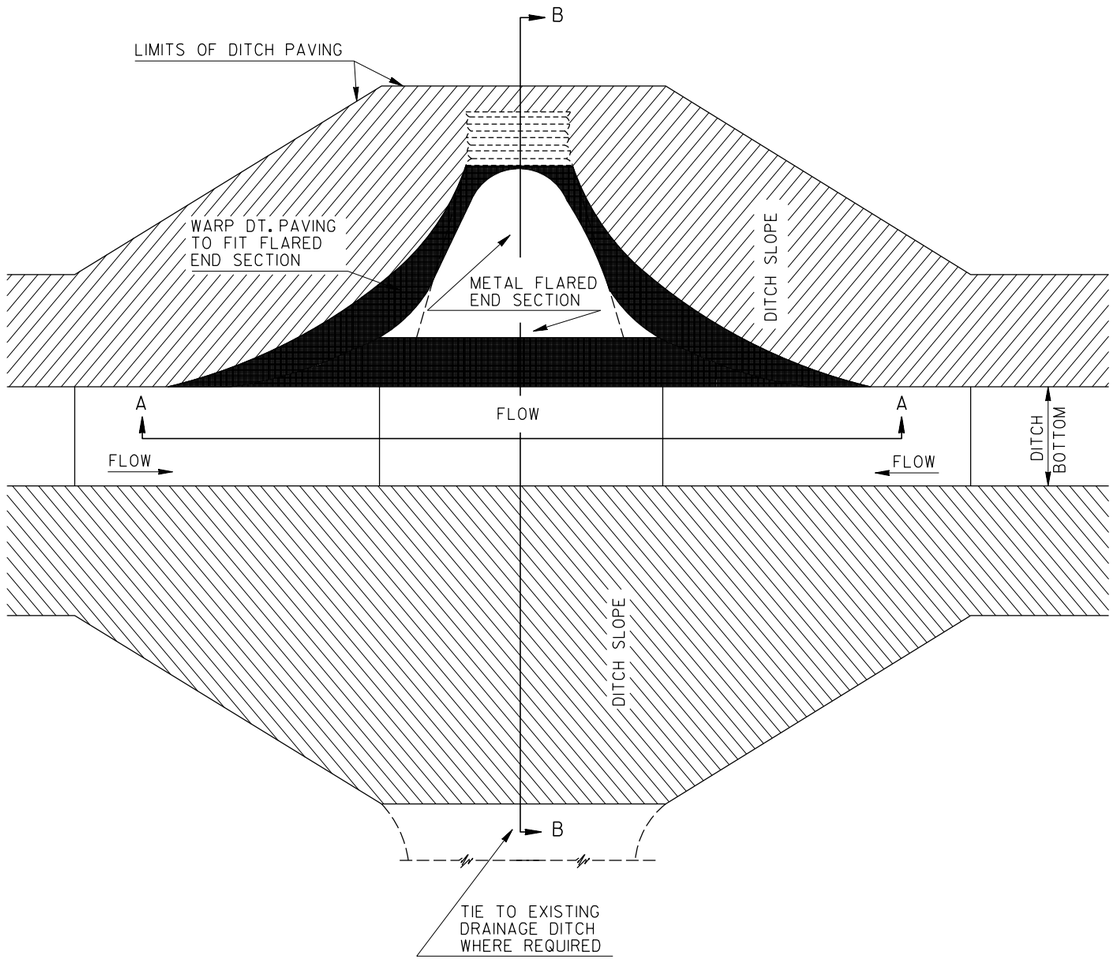

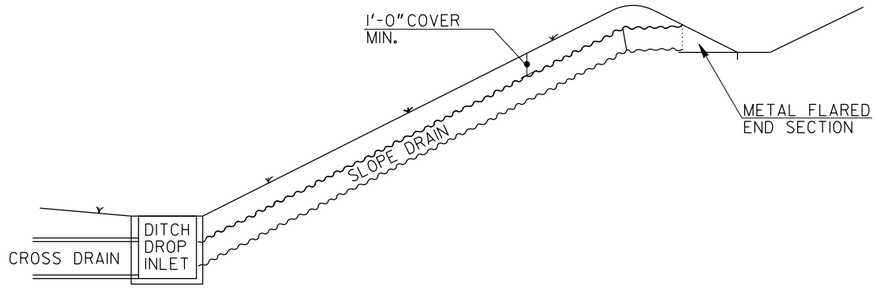

SECTIONAL VIEW

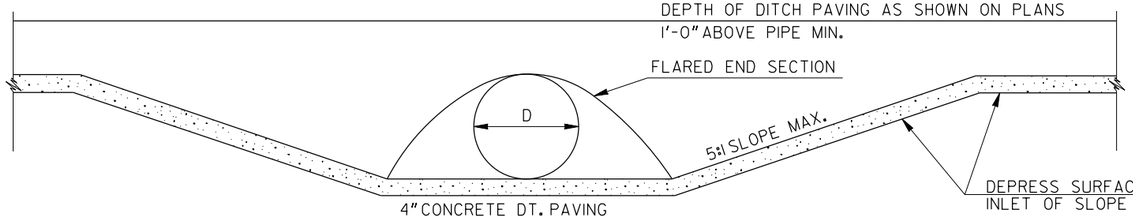

SECTION A-A

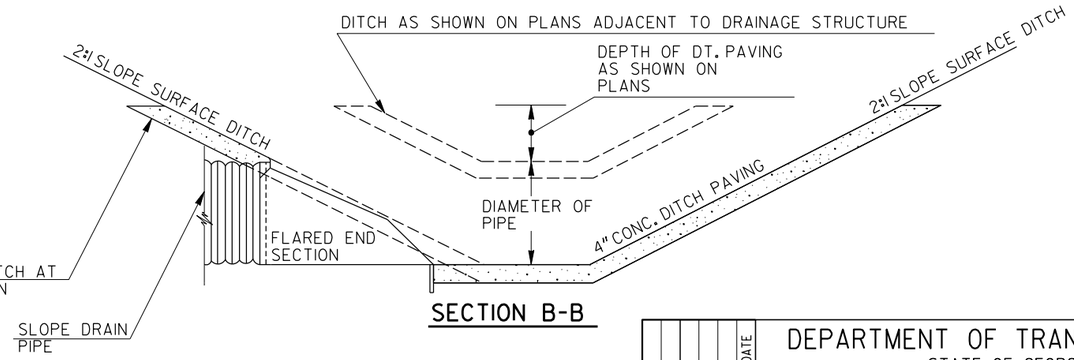

SECTION B-B

DEPARTMENT OF TRANSPORTATION
STATE OF GEORGIA

CONSTRUCTION DETAIL

INLET DRAINAGE STRUCTURE

(AT SURFACE DITCHES)

DATE | REVISION | BY

MAY 1976
NOT TO SCALE

NUMBER D-08

GDOT Georgia Department of Transportation | P. I. No.

TYPE "A"

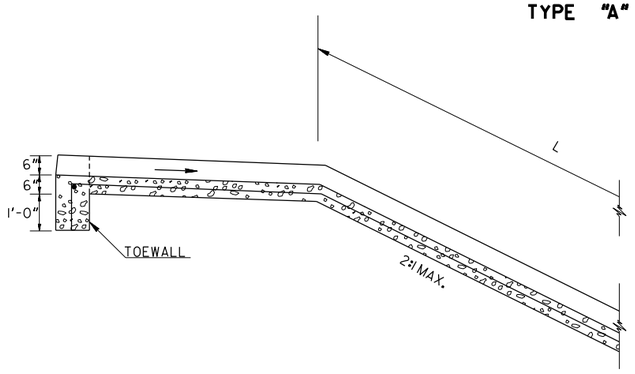

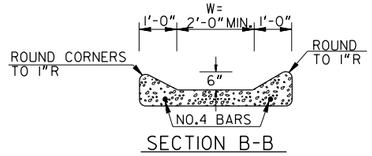

SECTION B-B

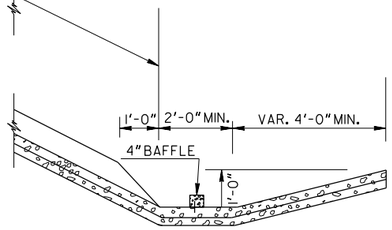

SECTION A-A

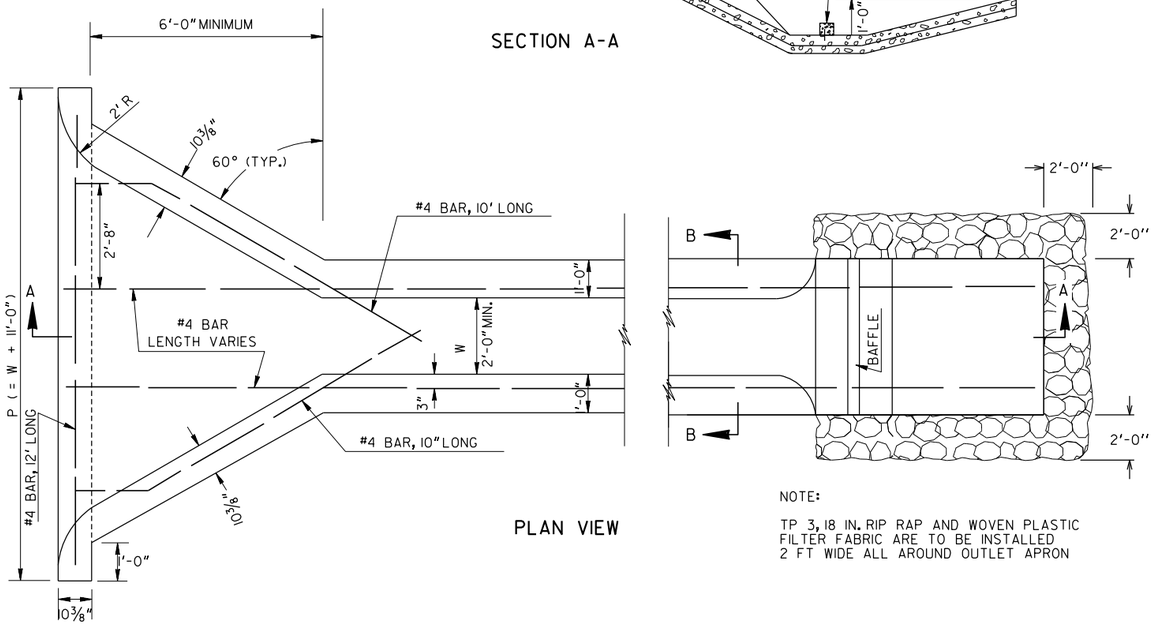

PLAN VIEW

NOTE:

TP 3, 18 IN. RIP RAP AND WOVEN PLASTIC FILTER FABRIC ARE TO BE INSTALLED 2 FT WIDE ALL AROUND OUTLET APRON

TYPE "A" FLUME QUANTITIES

(FOR W=2'-0") CU. YDS. CONCRETE = 2.41 + 0.0926 (L)
(FOR W=4'-0") CU. YDS. CONCRETE = 2.59 + 0.1306 (L)

(FOR EITHER W) LBS. STEEL = 41 + (1.336) (L)

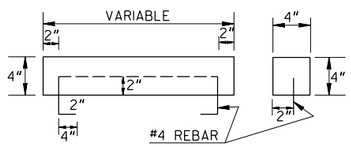

DETAILS OF 4" CONCRETE BAFFLE

TYPE "B"

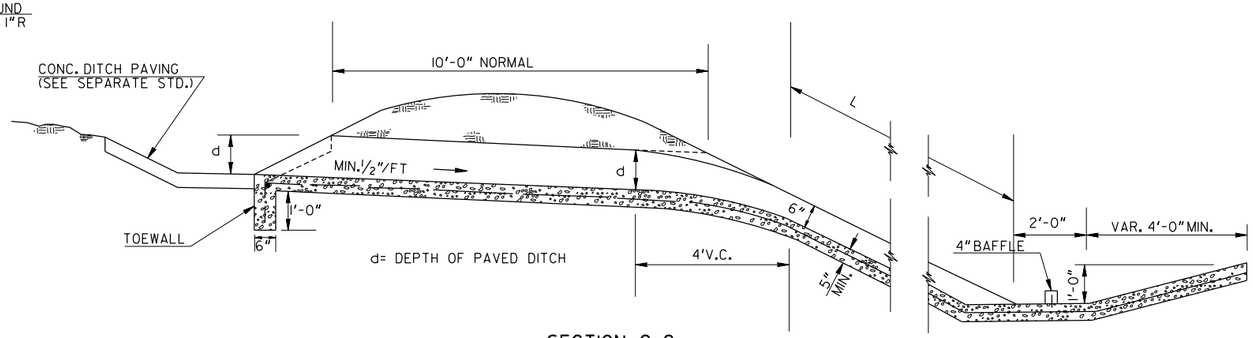

SECTION C-C

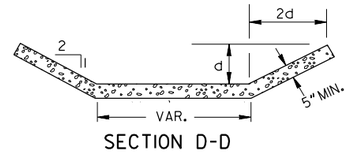

SECTION D-D

PLAN VIEW

NOTE:

TP 3, 18 IN. RIP RAP AND WOVEN PLASTIC FILTER FABRIC ARE TO BE INSTALLED 2 FT WIDE ALL AROUND OUTLET APRON

TYPE "B" FLUME QUANTITIES:

(FOR W=2'-0") CU. YDS. CONC. = K + 0.0926 (L)
(FOR W=4'-0") CU. YDS. CONC. = K + 0.1306 (L)

(FOR EITHER W) LBS. STEEL = 55 + 0.667 (P) + 1.336 (L)

d	W = 2'-0" P	W = 2'-0" K (CU.YDS.)	W = 4'-0" P	W = 4'-0" K (CU.YDS.)
6"	10'	1.94	12'	2.36
9"	11'	2.24	13'	2.68
1'-0"	12'	2.58	14'	3.05
1'-3"	13'	2.98	15'	3.43
1'-6"	14'	3.36	16'	3.84
1'-9"	15'	3.84	17'	4.32
2'-0"	16'	4.35	18'	4.86
2'-3"	17'	4.92	19'	5.45
2'-6"	18'	5.56	20'	6.10

NOTE: P=FLUME OPENING
K=CONCRETE CONSTANT (SEE FORMULAS)

GENERAL NOTES:

1. SPECIFICATIONS: GEORGIA STANDARD, CURRENT EDITION, AND SUPPLEMENTS THERETO.
2. SIZE AND DIMENSIONS OF TYPE A OR TYPE B FLUMES MAY BE ADJUSTED FOR AN INDIVIDUAL SITE WHERE SHOWN ON THE PLANS OR DIRECTED BY THE ENGINEER.
3. AT LOCATIONS WHERE FLUME OUTLETS INTO AN INLET STRUCTURE, OMIT BAFFLE AND DOWNTURN END AND CONNECT FLUME TO THE INLET STRUCTURE.
4. RIP RAP SHALL BE OMITTED WHERE CONCRETE FLUME OUTALLS TO PAVED DITCHES OR WHERE OTHER APPROVED EROSION CONTROL MATERIALS ARE USED.
5. POURED IN PLACE CONCRETE SHALL BE CLASS B MINIMUM. CLASS A CONCRETE SHALL BE USED FOR BAFFLES IF PRECAST.
6. BASIS OF PAYMENT:

CLASS B CONCRETE	--- CU. YDS.
BAR REINFORCEMENT STEEL	--- LB.
RIP RAP, TP 3, 18 IN.	--- SQ. YDS.
WOVEN PLASTIC FILTER FABRIC	--- SQ. YDS.

BY	REVISION	DATE
PN	REM. SAND BAGS; ADD RIP RAP	07-01-26

DEPARTMENT OF TRANSPORTATION
STATE OF GEORGIA

CONSTRUCTION DETAIL

CONCRETE FLUMES

TYPES "A" & "B"

OCTOBER 1983

NOT TO SCALE

NUMBER D-09

GDOT Georgia Department of Transportation | P. I. No. XXXXXXX

TYPICAL QUANTITIES FOR 4" CONCRETE DITCH PAVING - SQ. YDS. / LIN. FT.

DEPTH (FEET)	8:1 FR. SL. V BOTTOM 8:1 BK. SL.	8:1 FR. SL. 2' BOTTOM 8:1 BK. SL.	8:1 FR. SL. 2' BOTTOM 4:1 BK. SL.	8:1 FR. SL. 2' BOTTOM 3:1 BK. SL.	8:1 FR. SL. 2' BOTTOM 2:1 BK. SL.	6:1 FR. SL. 2' BOTTOM 6:1 BK. SL.	6:1 FR. SL. 2' BOTTOM 4:1 BK. SL.	6:1 FR. SL. 2' BOTTOM 3:1 BK. SL.	6:1 FR. SL. 2' BOTTOM 2:1 BK. SL.	4:1 FR. SL. 2' BOTTOM 4:1 BK. SL.	4:1 FR. SL. 2' BOTTOM 2:1 BK. SL.	2:1 FR. SL. 2' BOTTOM 2:1 BK. SL.	2:1 FR. SL. 3' BOTTOM 2:1 BK. SL.	4:1 FR. SL. 4' BOTTOM 4:1 BK. SL.	4:1 FR. SL. 4' BOTTOM 2:1 BK. SL.	2:1 FR. SL. 4' BOTTOM 2:1 BK. SL.	2:1 FR. SL. 5' BOTTOM 2:1 BK. SL.	2:1 FR. SL. 6' BOTTOM 2:1 BK. SL.	2:1 FR. SL. 7' BOTTOM 2:1 BK. SL.	2:1 FR. SL. 8' BOTTOM 2:1 BK. SL.	2:1 FR. SL. 9' BOTTOM 2:1 BK. SL.	2:1 FR. SL. 10' BOTTOM 2:1 BK. SL.	2:1 FR. SL. 12' BOTTOM 2:1 BK. SL.	2:1 FR. SL. 14' BOTTOM 2:1 BK. SL.	2:1 FR. SL. 16' BOTTOM 2:1 BK. SL.	2:1 FR. SL. 18' BOTTOM 2:1 BK. SL.	2:1 FR. SL. 20' BOTTOM 2:1 BK. SL.	2:1 FR. SL. 25' BOTTOM 2:1 BK. SL.	2:1 FR. SL. 30' BOTTOM 2:1 BK. SL.	DEPTH (FEET)
0.50	0.895	1.118	0.899	0.846	0.794	0.898	0.789	0.735	0.684	0.680	0.575	0.470	0.581	0.902	0.797	0.692	0.804	0.915	1.026	1.137	1.248	1.359	1.581	1.804	2.026	2.248	2.470	3.026	3.581	0.50
0.75	1.343	1.565	1.238	1.158	1.081	1.236	1.072	0.992	0.915	0.909	0.752	0.594	0.706	1.131	0.974	0.817	0.928	1.039	1.150	1.261	1.372	1.483	1.706	1.928	2.150	2.372	2.594	3.150	3.706	0.75
1.00	1.791	2.031	1.576	1.469	1.367	1.573	1.356	1.249	1.146	1.138	0.928	0.719	0.830	1.360	1.151	0.941	1.052	1.163	1.274	1.385	1.496	1.608	1.830	2.052	2.274	2.496	2.719	3.274	3.830	1.00
1.25	2.239	2.461	1.915	1.781	1.652	1.911	1.639	1.506	1.377	1.367	1.105	0.843	0.954	1.589	1.327	1.065	1.176	1.287	1.398	1.510	1.621	1.732	1.954	2.176	2.398	2.621	2.843	3.398	3.954	1.25
1.50	2.687	2.909	2.253	2.093	1.939	2.249	1.923	1.763	1.608	1.596	1.282	0.967	1.078	1.818	1.504	1.189	1.300	1.412	1.523	1.634	1.745	1.856	2.078	2.300	2.523	2.745	2.967	3.523	4.078	1.50
1.75	3.135	3.357				2.587	2.206	2.019	1.839	1.825	1.458	1.091	1.202	2.047	1.680	1.314	1.425	1.536	1.647	1.758	1.869	1.980	2.202	2.425	2.647	2.869	3.091	3.647	4.202	1.75
2.00	3.583	3.805				2.925	2.490	2.276	2.070	2.054	1.635	1.216	1.327	2.276	1.857	1.438	1.549	1.660	1.771	1.882	1.993	2.104	2.327	2.549	2.771	2.993	3.216	3.771	4.327	2.00
2.25	4.031	4.253				3.263	2.773	2.533	2.301	2.283	1.812	1.340	1.451	2.505	2.034	1.562	1.673	1.784	1.895	2.006	2.118	2.229	2.451	2.673	2.895	3.118	3.340	3.895	4.451	2.25
2.50	4.479	4.701				3.601	3.057	2.790	2.533	2.512	1.988	1.464	1.575	2.735	2.210	1.686	1.797	1.908	2.020	2.131	2.242	2.353	2.575	2.797	3.020	3.242	3.464	4.020	4.575	2.50
2.75	4.926	5.149				3.939	3.340	3.047	2.764	2.741	2.165	1.588	1.699	2.964	2.387	1.810	1.922	2.033	2.144	2.255	2.366	2.477	2.699	2.922	3.144	3.366	3.588	4.144	4.699	2.75
3.00	5.374	5.597				4.277	3.624	3.303	2.995	2.970	2.341	1.712	1.824	3.193	2.564	1.935	2.046	2.157	2.268	2.379	2.490	2.601	2.824	3.046	3.268	3.490	3.712	4.268	4.824	3.00
3.25	5.822	6.044				4.615	3.907	3.560	3.226	3.200	2.518	1.837	1.948	3.422	2.740	2.059	2.170	2.281	2.392	2.503	2.614	2.726	2.948	3.170	3.392	3.614	3.837	4.392	4.948	3.25
3.50	6.270	6.492				4.953	4.191	3.817	3.457	3.429	2.695	1.961	2.072	3.651	2.917	2.183	2.294	2.405	2.516	2.628	2.739	2.850	3.072	3.294	3.516	3.739	3.961	4.516	5.072	3.50
3.75	6.718	6.940				5.291	4.474	4.074	3.688	3.658	2.871	2.085	2.196	3.880	3.094	2.307	2.418	2.530	2.641	2.752	2.863	2.974	3.196	3.418	3.641	3.863	4.085	4.641	5.196	3.75
4.00	7.166	7.388				5.629	4.758	4.331	3.919	3.887	3.048	2.209	2.320	4.109	3.270	2.432	2.543	2.654	2.765	2.876	2.987	3.098	3.320	3.543	3.765	3.987	4.209	4.765	5.320	4.00

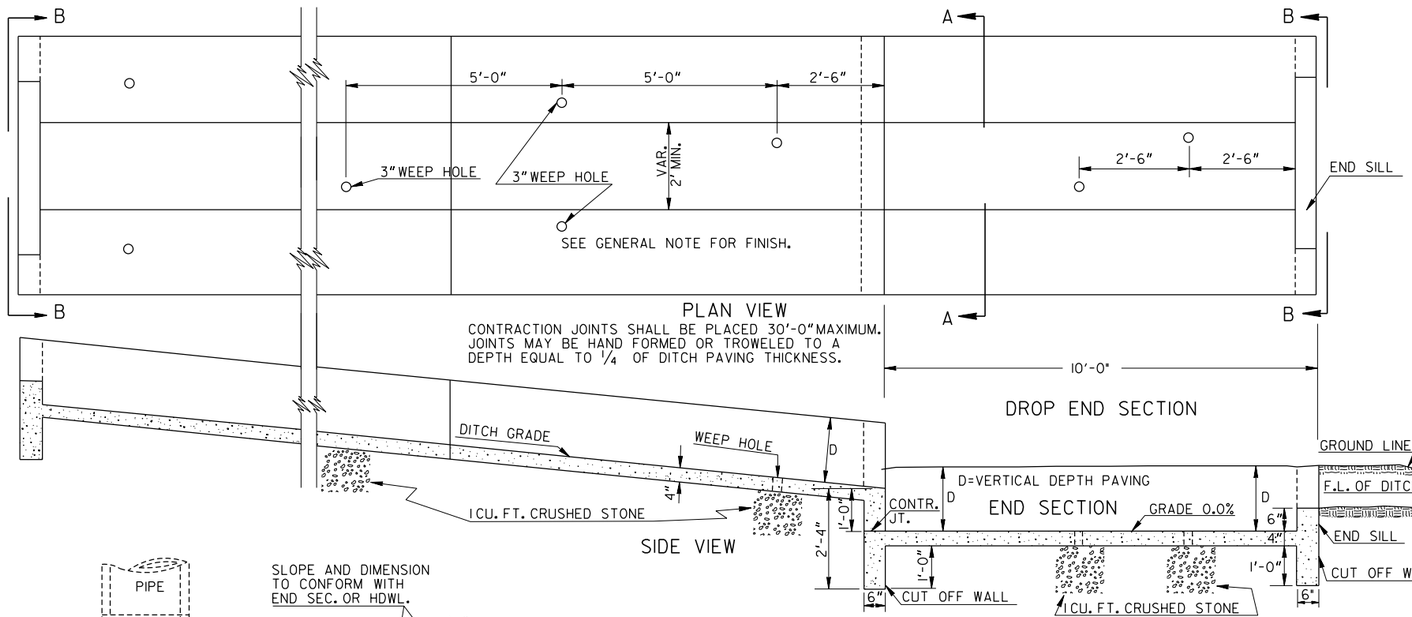

NOTE: DROP END SECTION MUST BE CONSTRUCTED BEFORE ADJACENT UPSTREAM SECTION IS POURED (SEE CONSTR. JOINT IN SECTION A-A). DROP END SECTION MAY BE OMITTED AND END SECTION OF DITCH BURIED 3'-0" BELOW NATURAL CHANNEL WHEN APPROVED BY THE ENGINEER.

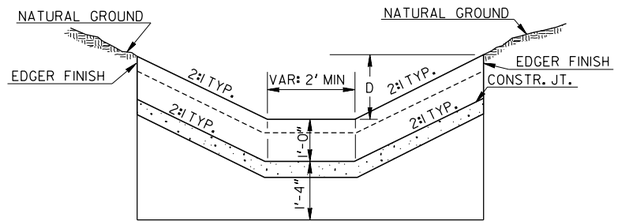

SECTION A-A

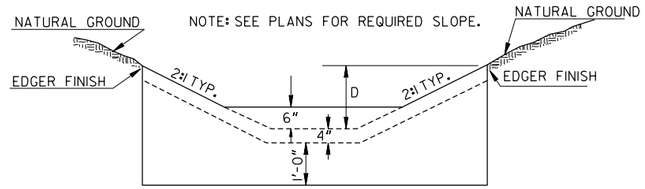

SECTION B-B

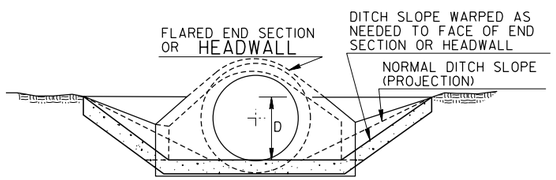

SECTION C-C

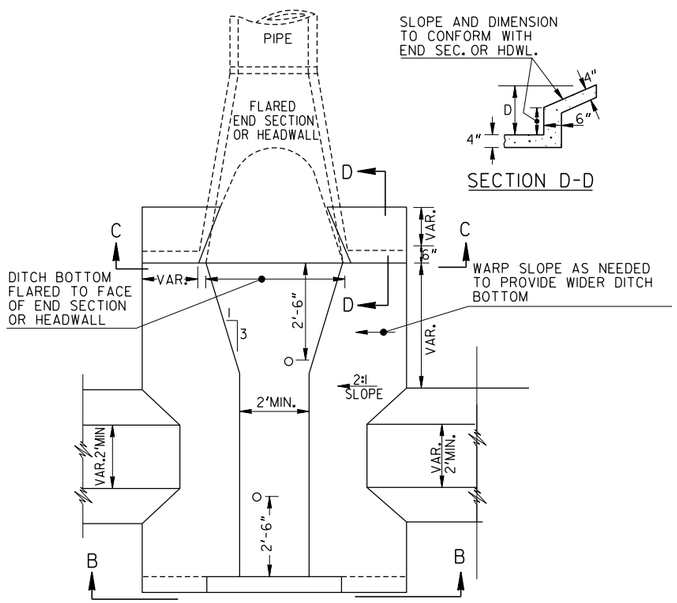

CONNECTING PAVED DITCH TO FLARED END SECTION OR HEADWALL (TYPICAL DETAIL)

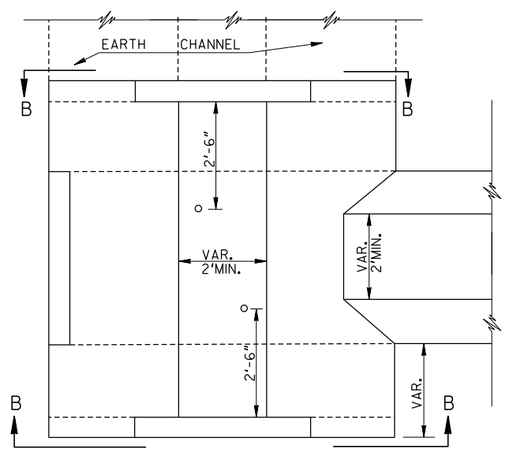

CONNECTING PAVED DITCH TO EARTH CHANNEL (TYPICAL DETAIL)

GENERAL NOTES:

1. SPECIFICATIONS: GEORGIA STANDARD, CURRENT EDITION, & SUPPLEMENTS THERETO.
2. CONCRETE DITCH PAVING IS TO BE CONSTRUCTED TO LINES AND GRADES SHOWN ON THE PLANS OR AS DIRECTED BY THE ENGINEER.
3. PAYMENT FOR CONCRETE DITCH PAVING INCLUDES THE CUT-OFF WALL & END SILL AT INLET AND OUTLET END OF DITCH, THE CRUSHED STONE FOR WEEP HOLES, AND EXPANSION JOINT MATERIAL.
4. A DROP END SECTION WILL BE CONSTRUCTED AS 4" CONCRETE DITCH PAVING ON THE DOWNSTREAM END OF ALL PAVED DITCHES.
5. SIDE SLOPES ON PAVED BERM AND SURFACE DITCHES SHALL BE 2:1 UNLESS MODIFIED ON CONSTRUCTION TO MEET FIELD CONDITIONS. WHEN PAVING IS PLACED IN A NORMAL ROADWAY DITCH, THE SIDE SLOPES AND BOTTOM WILL CONFORM TO THOSE SHOWN ON THE ROADWAY TYPICAL SECTION.
6. WEEP HOLES SHALL BE OMITTED IN ALL SURFACE DITCHES OF THE TOP OF CUT SLOPES. WEEP HOLES SHALL BE REQUIRED IN BERM DITCHES AND ROADWAY DITCHES WHEN PAVED.
7. SURFACE FINISH SHALL BE FLOATED SUFFICIENTLY TO COVER AGGREGATE WITH MORTAR.
8. EXPANSION JOINTS ARE REQUIRED WHERE PAVED DITCH CONNECTS TO OTHER CONCRETE STRUCTURES.
9. QUANTITIES APPLY TO ANY TYPE OF DITCH REQUIRING PROTECTION. QUANTITIES MAY ALSO BE USED FOR PERMANENT SOIL REINFORCING MAT OR OTHER KINDS OF DITCH PROTECTION ITEMIZED AS SQ. YDS.

DEPARTMENT OF TRANSPORTATION
STATE OF GEORGIA

CONSTRUCTION DETAIL

4" CONCRETE DITCH PAVING

DETAILS AND QUANTITIES

DATE | REVISION | BY

JANUARY 1988

NOT TO SCALE

NUMBER D-10

GDOT Georgia Department of Transportation | P. I. No. XXXXXXX

NOTE: LONGITUDINAL REINFORCEMENT FOR DROP TAPERED INLET SECTION SHALL BE TAPERED AND LAPPED 2'-0" MIN. WITH LONGITUDINAL BARS FROM NORMAL BOX CULVERT. FIELD CUT LONGITUDINAL BARS AS NECESSARY TO PROVIDE 2-1/4" MIN. CL. BETWEEN ADJACENT BARS.

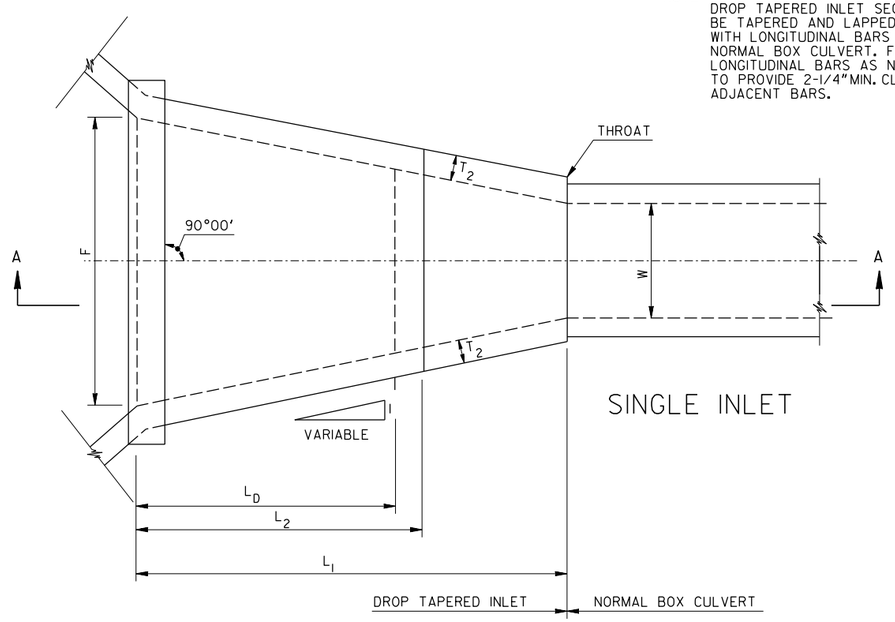

SINGLE INLET

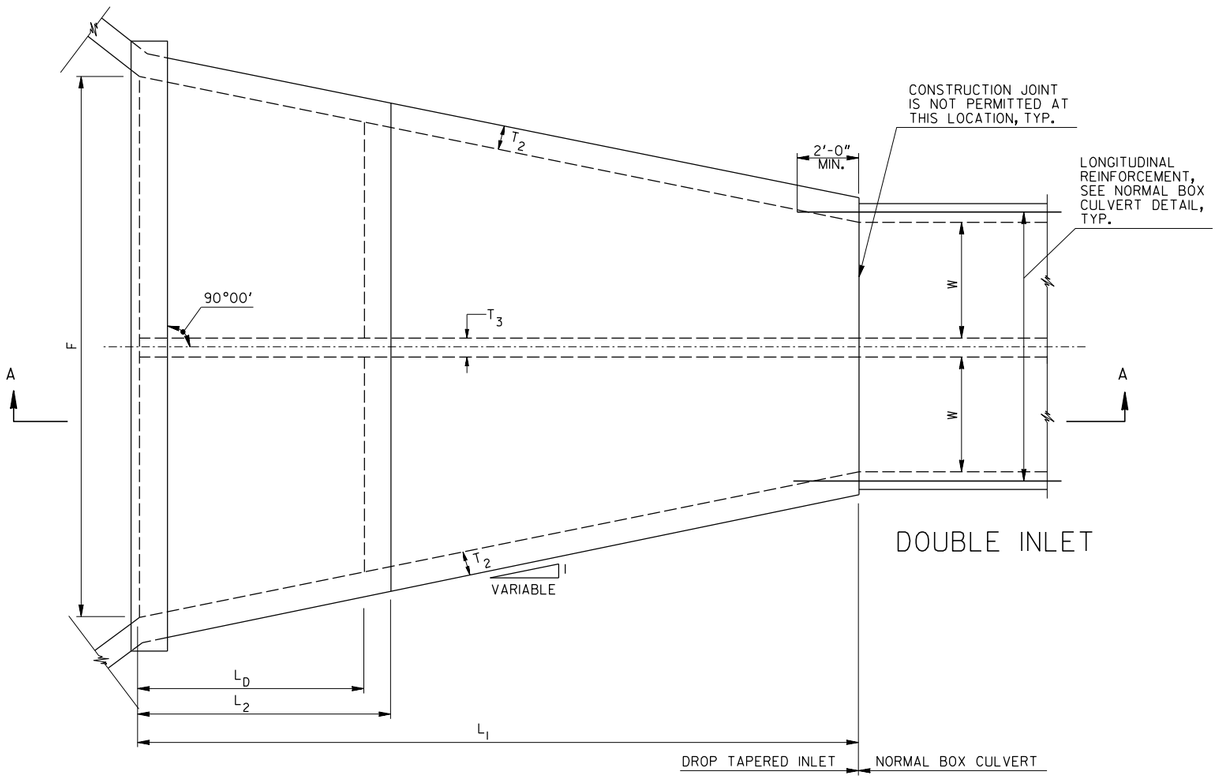

DOUBLE INLET

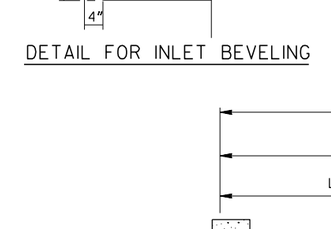

DETAIL FOR INLET BEVELING

STA.	NORMAL BOX CULVERT	℄ SKEW	W	F	L_1	L_2	L_D	H	H_F	S	D	T_1	T_2	T_3	GRADE	ELEV. "A"	ELEV. "B"	ELEV. "C"	SEE STD. BELOW FOR CONC. & STEEL DETAILS	
			FT.	FT.&IN.	FT.&IN.	FT.&IN.	FT.&IN.	FT.	FT.&IN.	FT.&IN.	FT.&IN.	IN.	IN.	IN.	%	FT.	FT.	FT.	SIZE	STD. NO.

SECTION A-A SINGLE & DOUBLE INLET

GENERAL NOTES

1. TRANSVERSE CONSTRUCTION JOINTS BETWEEN BARREL SECTIONS WILL NOT BE USED IN THE TAPERED INLET OR THE FIRST 15' OF THE NORMAL BOX CULVERT.

2. THIS STRUCTURE MUST BE CONSTRUCTED TO THE LINES AND GRADES SHOWN ON THE PLANS IN ORDER TO ENSURE ITS PROPER HYDRAULIC FUNCTION.

   IF FIELD CONDITIONS ARE ENCOUNTERED ON CONSTRUCTION WHICH ARE NOT COMPATIBLE TO THIS DESIGN, THE ROAD DESIGN DIVISION HYDRAULIC SECTION SHOULD BE CONSULTED BEFORE MODIFICATIONS ARE MADE.

3. THICKNESS OF CONCRETE FOR T1, T2, T3, AND THE SIZE AND SPACING OF STEEL IN TAPERED INLET WILL BE THE SAME AS THE STD. LISTED. WINGWALLS AT INLET END SHALL BE FOR 90° SKEW.

BY	DATE	REVISION
G.M.E.	6-7-77	GEN. REVISION
	8-15-76	ADD "L2" DIMEN.
J.M.M.	3-27-74	INLET BEVELING DET.

DEPARTMENT OF TRANSPORTATION
STATE OF GEORGIA

CONSTRUCTION DETAIL

DROP-TAPERED INLETS

NOT TO SCALE

NUMBER D-14

GDOT Georgia Department of Transportation | P. I. No. XXXXXXX

LOCATION OF STANDARD 1125 HEADWALL FOR SKEWED PIPES

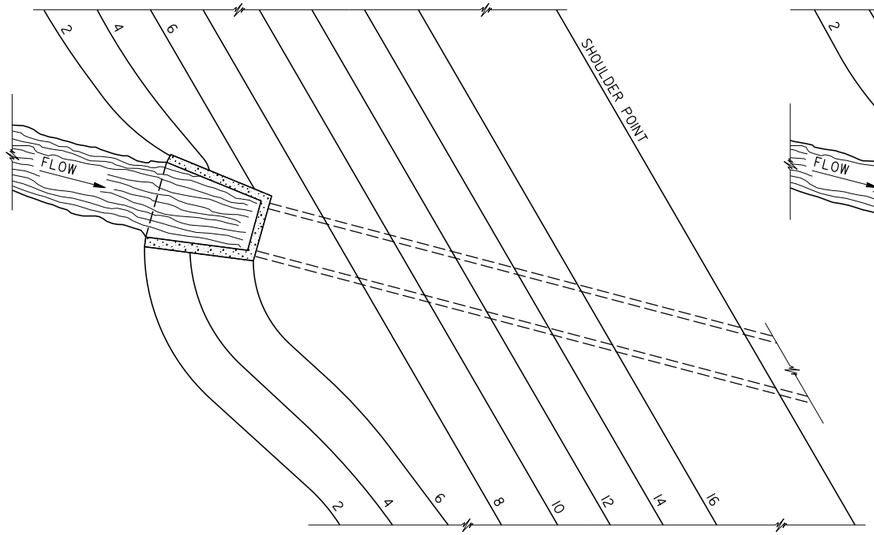

LOCATION OF STRAIGHT HEADWALL FOR SKEWED PIPES

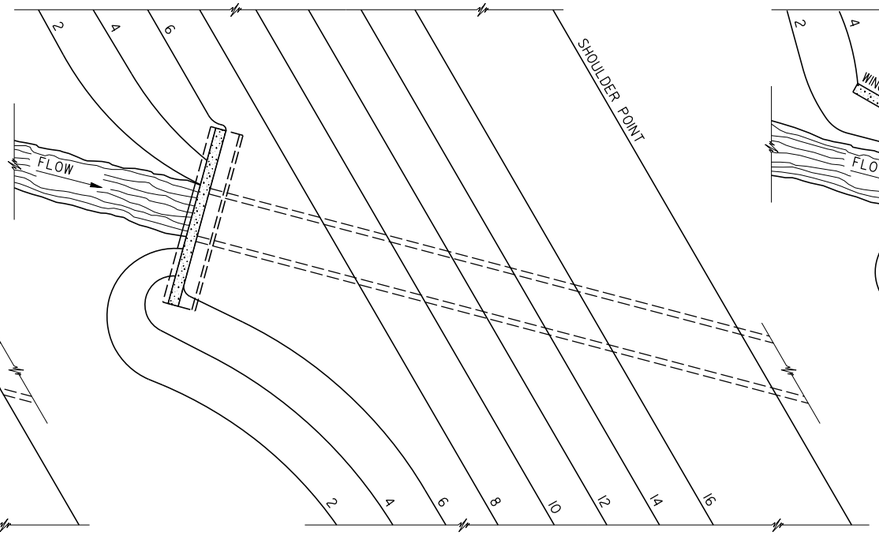

LOCATION OF WINGWALLS & PARAPET FOR SKEWED BOX CULVERTS

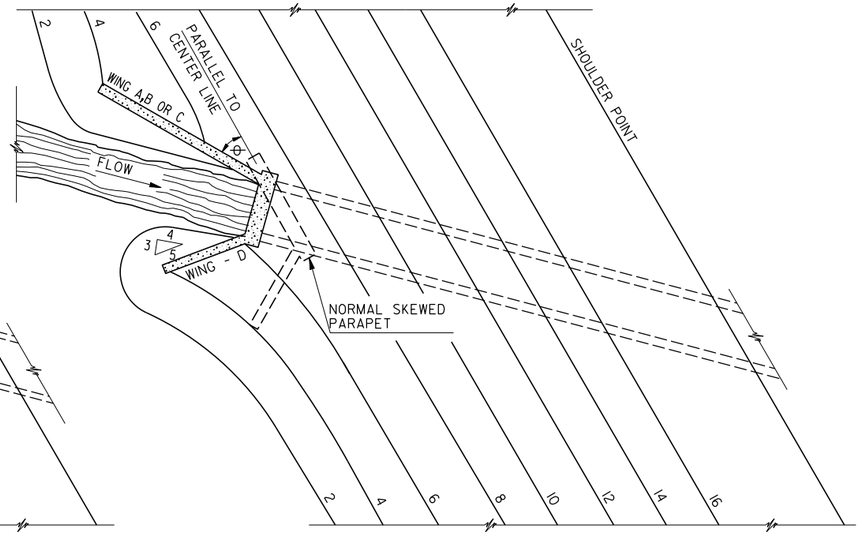

LOCATION OF FLARED END SECTIONS FOR MULTIPLE LINE SKEWED PIPES

DETAIL APPLIES TO INLET AND OUTLET LOCATIONS

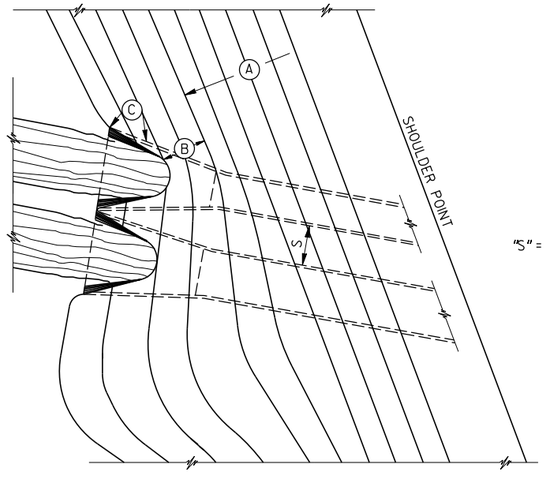

NOTE: FOR METAL FLARED END SECTION

ON MULTIPLE PIPE LINES WHERE WINGTIPS OF ADJACENT METAL END SECTIONS OVERLAP, THE OVERLAPPING PORTIONS MAY BE FIELD CUT TO FIT AND THE ADJACENT END SECTIONS WELDED TOGETHER ALONG THE LINE OF CUT, WITH ALL DAMAGE TO THE GALVANIZING BEING REPAIRED TO THE EQUAL OF ORIGINAL CONDITION, OR THE DIMENSION "S" (AT THE DIRECTION OF THE ENGINEER OR AS SHOWN ON THE PLANS) MAY BE ADJUSTED IN ORDER TO ACCOMMODATE THE END SECTIONS.

"S" = I.D. OF PIPE OR 3 FT., WHICHEVER IS SMALLER. SEE STD. 1030-D.

Ⓐ = NORMAL FILL SLOPES

Ⓑ = SLOPE 4:1 OR FLATTER TO BACK OF END SECTION (FOR CONC. END SECTION).

Ⓒ = SLOPE WARPED TO MATCH END SECTION.

BOX CULVERT WING WALLS		
75° SKEW	WING - A	~~θ~~ = 45°
60° SKEW	WING - B	~~θ~~ = 45°
45° SKEW	WING - C	~~θ~~ = 30°
ALL SKEWS	WING - D	5 : 4 : 3

DEPARTMENT OF TRANSPORTATION
STATE OF GEORGIA

CONSTRUCTION DETAIL

TYPICAL SKEWED CULVERT ENDS

DATE | REVISION | BY

DECEMBER 1983
NOT TO SCALE

NUMBER D-15

GDOT Georgia Department of Transportation | P. I. No. XXXXXXX

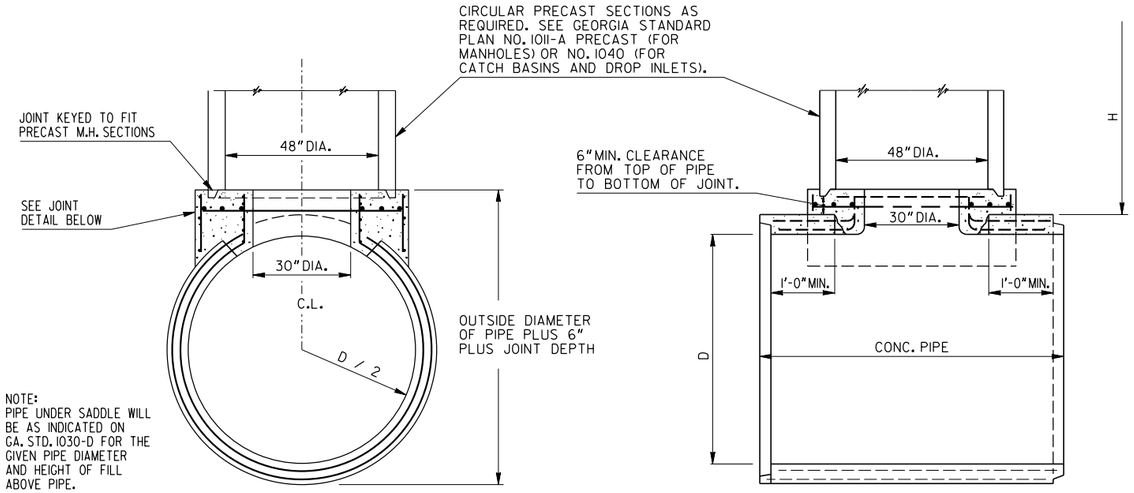

TRANSVERSE SECTION

LONGITUDINAL SECTION

D = INSIDE DIAMETER (MIN. 42")

D	H (MAX.)
TO 72"	30 FT.
78"	20 FT.
84"	20 FT.
OVER 84"	15 FT.

NOTE:
SADDLE NOT PERMITTED FOR HEIGHTS GREATER THAN SHOWN IN TABLE, UNLESS INDIVIDUAL STRUCTURAL JUSTIFICATION IS MADE.

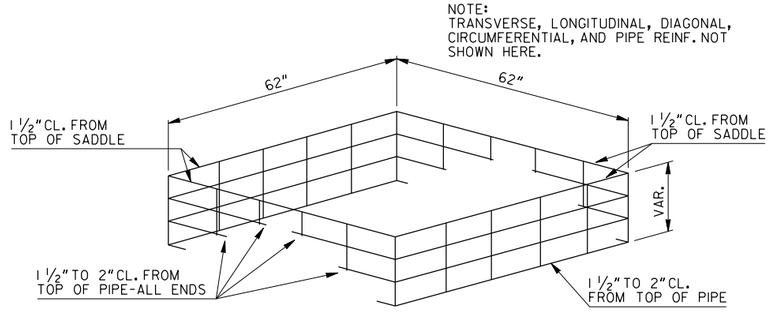

PICTORIAL VIEW - VERTICAL & HORIZONTAL REINFORCEMENT

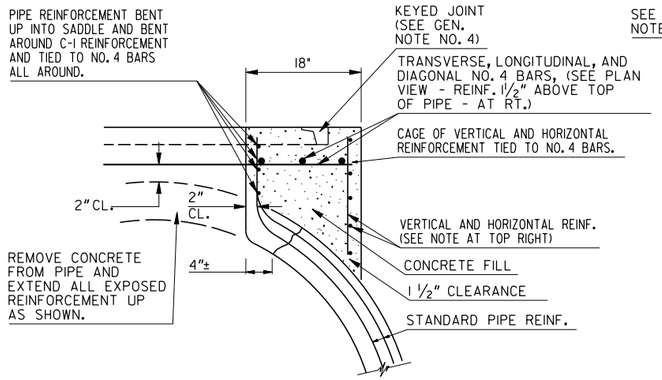

JOINT DETAIL

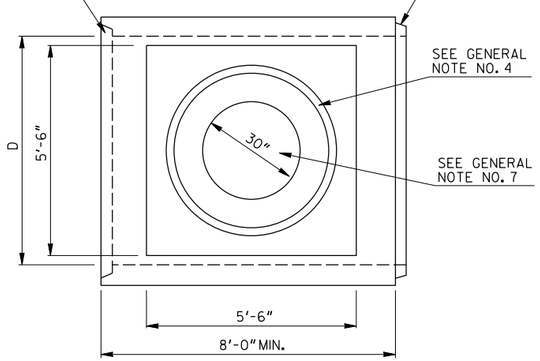

PLAN

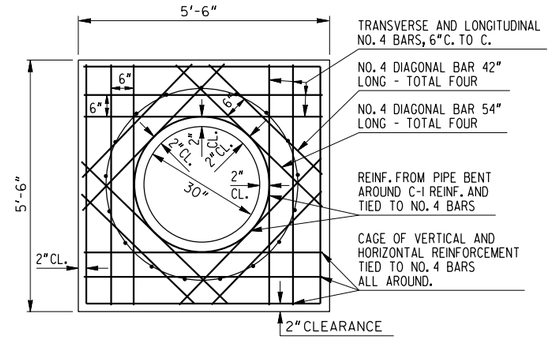

PLAN VIEW - REINFORCEMENT (2" ABOVE TOP OF PIPE)

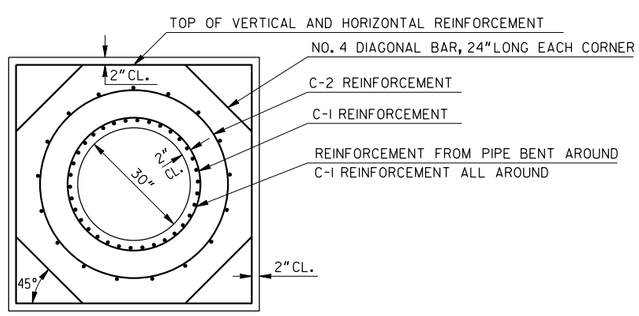

PLAN OF TOP REINFORCING (2" FROM TOP OF SADDLE)

NOTE:
SADDLE PORTION OF STRUCTURE MAY BE PRECAST OR BUILT-IN PLACE ONTO PIPE SECTION AS SHOWN.

OR

SADDLE MAY BE PRECAST SEPARATELY AND ATTACHED TO PIPE WITH EPOXY. EXPOSED REINFORCEMENT FROM PIPE WILL BE CUT OFF AT OPENING IF THIS METHOD IS USED.

SPECIAL NOTE:
REINFORCED CONCRETE SADDLE WILL NOT BE PERMITTED WHERE TOP OF STRUCTURE IS LOCATED IN ROADWAY OR SUBJECT TO CONTINUOUS ROADWAY TRAFFIC.

GENERAL NOTES:

1. SPECIFICATIONS: GEORGIA STANDARD SPECIFICATIONS AND / OR SPECIAL PROVISIONS.

2. FOR STRUCTURE DETAILS NOT SHOWN SEE:
   MANHOLES - STANDARDS 1011-A AND 1011-A PRECAST
   CATCH BASINS AND DROP INLETS - STANDARD 1040 AND APPLICABLE STD. FOR CATCH BASIN OR DROP INLET.
   PIPE CULVERTS - STANDARD 1030-D

3. REQUIREMENTS FOR TRENCH CONSTRUCTION, BACKFILL MATERIALS, ETC., SHALL BE THE SAME FOR TEE SECTION AS FOR THE ADJOINING PIPE CULVERT.

4. KEYED JOINT - WHERE PRECAST CIRCULAR MANHOLE SECTIONS ARE TO BE LOCATED ON TOP OF SADDLE, A CIRCULAR KEYED JOINT WILL BE REQUIRED. JOINT SHALL BE DESIGNATED TO MATCH WITH RISER SECTIONS AND SHALL PROVIDE BEARING SURFACE AREA EQUAL TO THAT OF RISER JOINTS. KEYED JOINT MAY BE PROTRUDED OR RECESSED (AS SHOWN) SO LONG AS THE 6" MIN. CLEARANCE (SEE LONGITUDINAL SECTION) IS RETAINED.

5. JOINT SHOWN FOR HORIZONTAL CONNECTION TO PIPE IS ONLY TYPICAL. TEE JOINT WILL BE OF SAME DESIGN AND KIND AS ADJOINING PIPE CULVERT.

6. PAYMENT FOR INLET, MANHOLE, JUNCTION BOX, OR CATCH BASIN AND PAYMENT FOR PIPE WILL INCLUDE SADDLE, PIPE WITH OPENING, AND ALL INCIDENTALS NECESSARY TO COMPLETE THE ITEM AS SHOWN.

7. 30" DIAMETER OPENING MAY BE REDUCED (18" MIN.) FOR DROP INLETS. RECTANGULAR OR SQUARE STRUCTURES OF SIZES AND DIMENSIONS SHOWN ON APPLICABLE STANDARD DETAILS MAY BE CONSTRUCTED ON TOP OF SADDLE IN LIEU OF THE 48" DIAMETER CIRCULAR RISERS SHOWN.

ADDITIONAL REINFORCEMENT REQUIRED:
VERTICAL AND HORIZONTAL REINFORCEMENT WILL CONSIST OF A CAGE OF 2/2 6X6 WELDED WIRE FABRIC OR NO.4 BARS SPACED 12" C. TO C. (MAX.) MEETING THE DIMENSIONS AND CLEARANCES SHOWN.

TRANSVERSE, LONGITUDINAL, AND DIAGONAL REINFORCEMENT WILL BE NO. 4 BARS.

ALL REINFORCEMENT EXTENDING FROM PIPE WILL BE TIED TO TRANSVERSE AND LONGITUDINAL REINFORCEMENT AT ALL POINTS OF TANGENCY.

C-1 REINFORCEMENT:
FOUR NO. 3 RINGS IN THROAT OF TEE, 2 1/2" C. TO C. REINFORCEMENT FROM PIPE EXTENDED UP AND BENT AROUND THESE RINGS ALL AROUND.

C-2 REINFORCEMENT:
SAME REINFORCEMENT AS REQUIRED FOR PRECAST MANHOLE RISER SECTIONS (A.S.T.M. C-476) PROVIDING A MINIMUM OF TWO LINES OF CIRCUMFERENTIAL REINFORCEMENT WITH A MINIMUM OF ONE LINE OF CIRCUMFERENTIAL REINFORCEMENT IN KEYED JOINT. C-2 REINFORCEMENT MAY BE OMITTED WHERE CIRCULAR RISERS WILL NOT BE REQUIRED ON SADDLE.

BY	REVISION	DATE
R.M.J.	REVISED	6-15-76

DEPARTMENT OF TRANSPORTATION
STATE OF GEORGIA

CONSTRUCTION DETAIL

REINFORCED CONCRETE SADDLE

FOR PIPE CULVERTS

NOT TO SCALE

NUMBER D-18

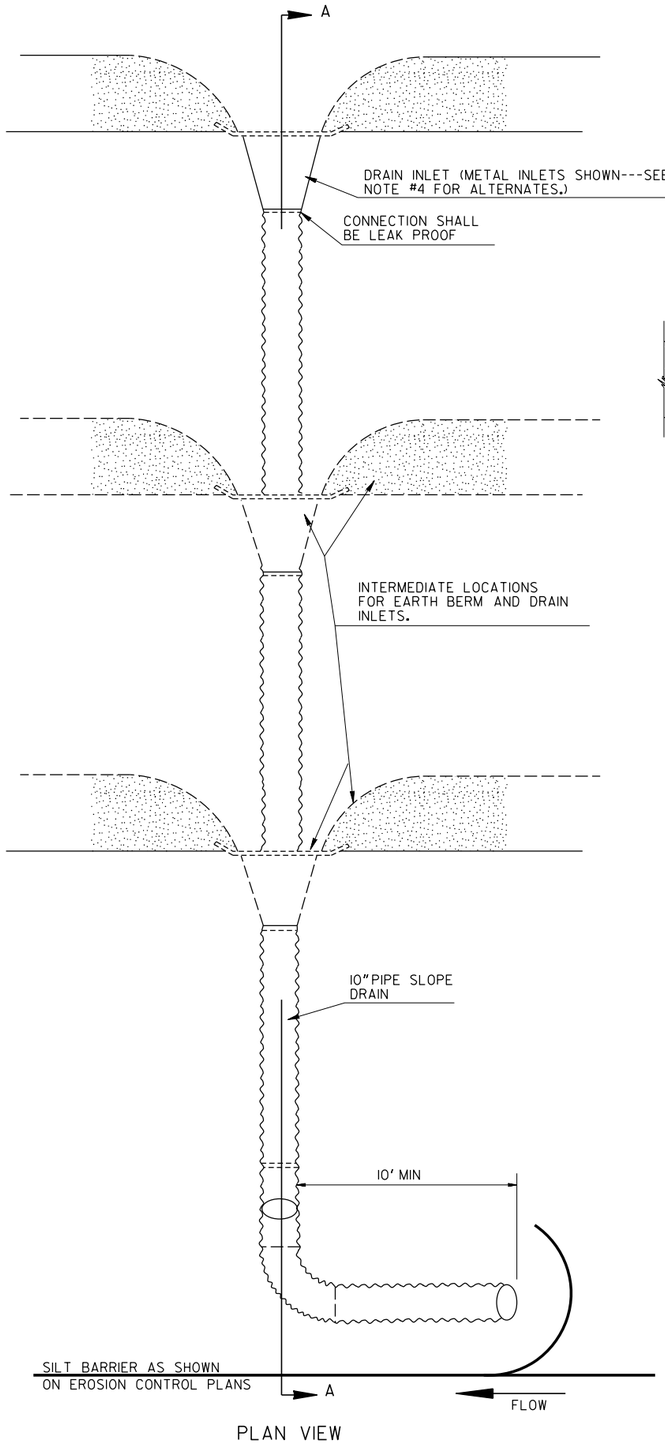

PLAN VIEW

USES:

TEMPORARY PIPE SLOPE DRAIN IS USED TO CARRY WATER FROM THE WORK AREA TO A LOWER ELEVATION. TYPICAL SPACING SHALL BE AT INTERVALS OF 500 FEET ON DIAMETER TO 2% GRADES, 200 FEET ON STEEPER GRADES, AND MORE FREQUENTLY AS DICTATED BY EXISTING FIELD CONDITIONS,

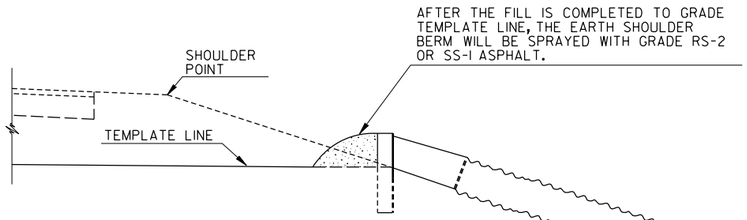

SECTION A-A

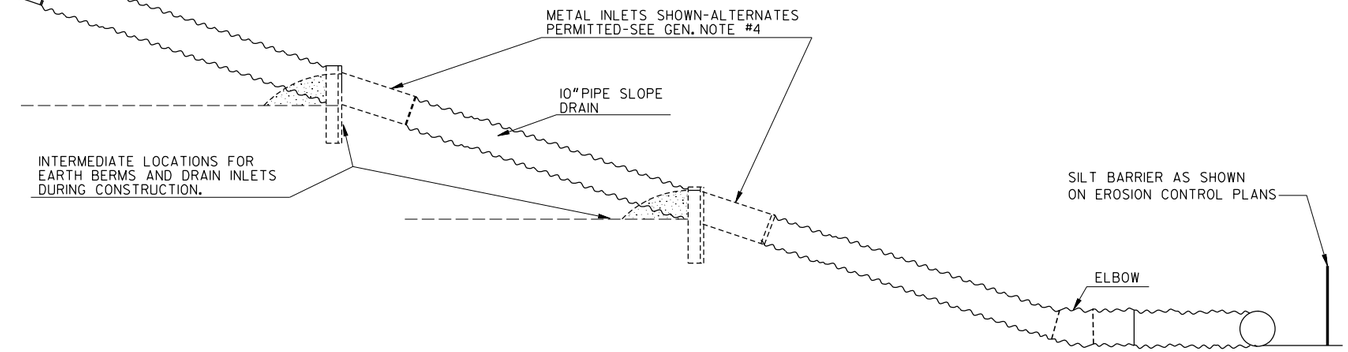

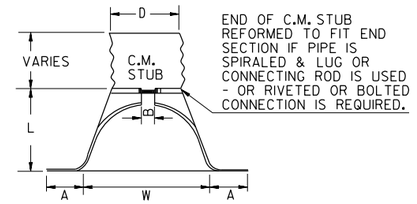

PLAN

END OF C.M. STUB REFORMED TO FIT END SECTION IF PIPE IS SPIRALED & LUG OR CONNECTING ROD IS USED - OR RIVETED OR BOLTED CONNECTION IS REQUIRED.

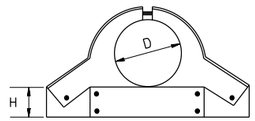

FRONT

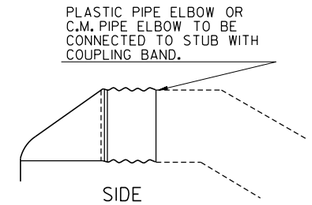

SIDE

TYPICAL DIMENSIONS							
D	GALV. STEEL	ALUM.	A	B	H	L	W
10"	18 GA	18 GA	7½"	2½"	6"	14½"	21"
12"	16 GA	16 GA	5"	6"	6"	20"	24"

ALTERNATE DRAIN INLET (METAL)

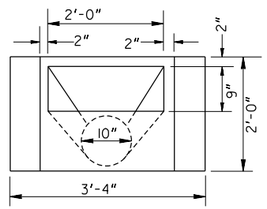

FRONT VIEW

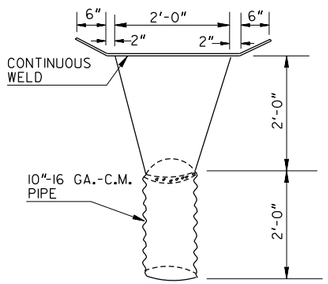

PLAN VIEW

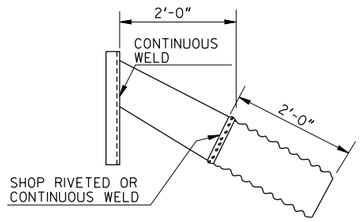

SIDE VIEW

GENERAL NOTES:

1. DRAIN INLETS AND SLOPE DRAIN PIPE USED FOR TEMPORARY EROSION AND POLLUTION CONTROL UNDER SECTION 163 WILL BE RETAINED FOR USE AS INVENTORY ITEMS BY THE CONTRACTOR.

2. EROSION PROTECTION AT PIPE OUTLET WILL BE PROVIDED AS APPROPRIATE. THE PIPE MAY BE EXTENDED TO OUTLET IN A PAVED DITCH OR TEMPORARY DISSIPATORS CONSTRUCTED OF LOGS OR STONE MAY BE USED. NO SEPARATE PAYMENT WILL BE MADE FOR THIS PROTECTION MEASURE.

3. SLOPE DRAIN PIPE MAY BE ANY TYPE ALLOWED BY THE GA. STANDARD SPECIFICATIONS.

4. ALLOWABLE DRAIN INLET ALTERNATES WILL BE:

(A) IF SLOPE DRAIN IS PLASTIC, A PLASTIC DRAIN INLET OR PLASTIC FLARED END SECTION HAVING SIMILAR DESIGN TO METAL INLETS OR END SECTIONS MAY BE USED FOR THE DRAIN INLET.
(B) A METAL FLARED END SECTION MAY BE USED WITH EITHER PLASTIC PIPE OR C.M. PIPE, IF THE END SECTION WAS MADE FOR LARGER PIPE THAN THE SLOPE DRAIN PIPE, AN APPROVED MODIFIED CONNECTION WILL BE REQUIRED BETWEEN THE PIPE AND THE END SECTION.
(C) A SUMP HOLE WITH DIMENSIONS AT LEAST EQUIVALENT TO THE METAL DRAIN AND LINED WITH POLYETHYLENE OR OTHER MATERIAL AS APPROVED BY THE ENGINEER MAY BE USED WITH ANY TYPE OF PIPE.
(D) THE METAL DRAIN INLET SHOWN MAY BE USED WITH EITHER 10"C.M. PIPE OR PLASTIC PIPE.

5. THE CONTRACTOR MAY ELECT TO USE PIPE LARGER THAN 10"DIAMETER WITH NO ADDITIONAL PAYMENT.

BY	REVISION	DRWG. NO.	DATE
PN	ADDED 56-____		07-01-26
	ADDED ELBOW		02-25-00

DEPARTMENT OF TRANSPORTATION
STATE OF GEORGIA

CONSTRUCTION DETAIL D-19
TEMPORARY PIPE SLOPE DRAIN WITH DRAIN INLET

NOT TO SCALE

NUMBER 56-

GDOT Georgia Department of Transportation | P. I. No.

TYPE 1- FOR BOX CULVERTS

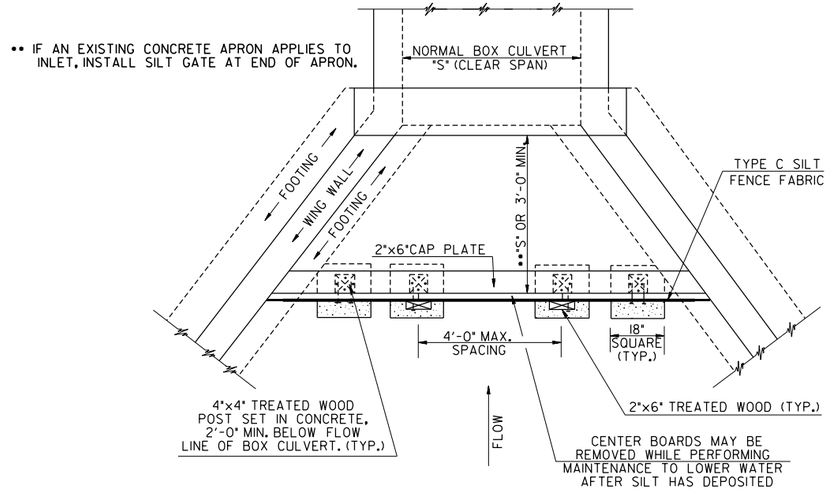

TOP VIEW

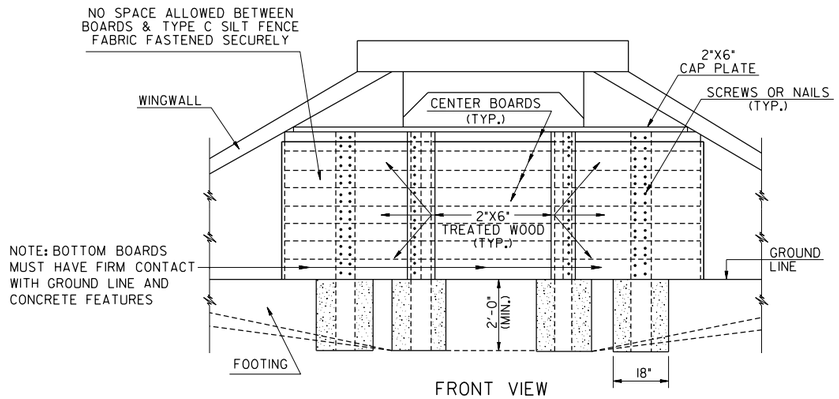

FRONT VIEW

TYPE 2 - FOR STRAIGHT HEADWALLS

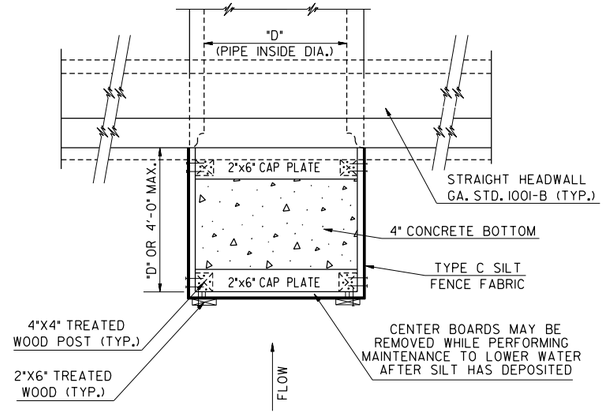

TOP VIEW

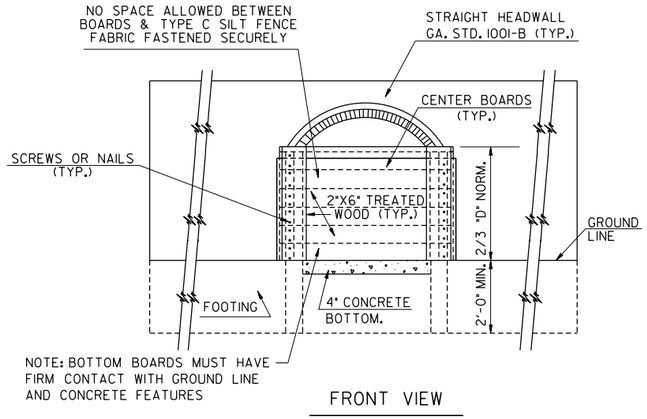

FRONT VIEW

TYPE 3 - FOR FLARED END SECTIONS AND TAPERED HEADWALLS

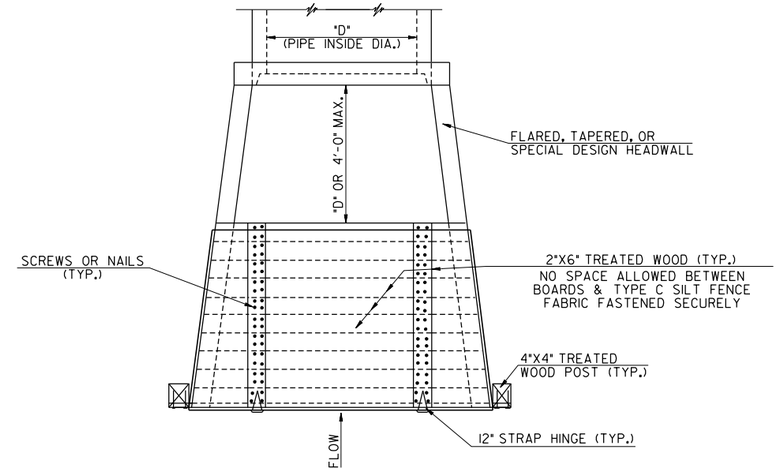

TOP VIEW

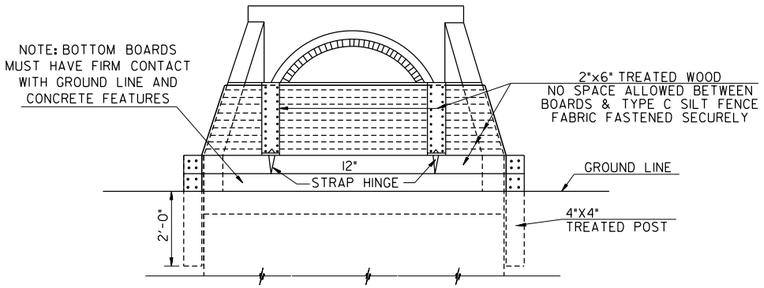

FRONT VIEW

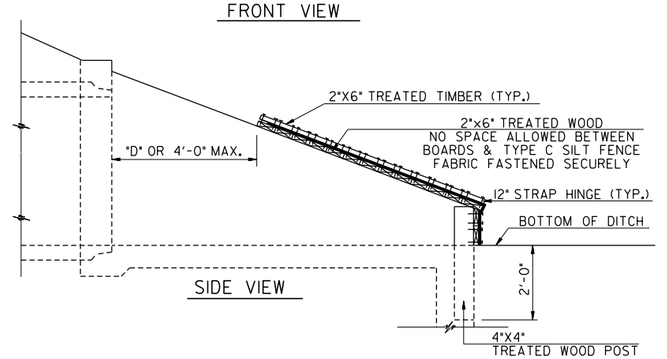

SIDE VIEW

SILT CONTROL GATE TYPE I NOTES:

1. REFER TO GA. STD 2332 FOR CONCRETE APRONS.
2. SEE SECTION 163 FOR THE REMOVAL OF TYPE I SILT CONTROL GATES.

GENERAL NOTES:

1. A SILT CONTROL GATE IS A TEMPORARY STRUCTURE PLACED AT INLETS TO FORM A BASIN FOR TRAPPING SEDIMENT.
2. SILT GATES SHALL NOT BE USED ON STRUCTURES THAT CONVEY STATE WATERS.
3. SILT GATES SHALL ONLY BE USED ON DRAINAGE AREAS UP TO 50-ACRES WITH NO MORE THAN 5-ACRES DISTURBED WITHIN THE DRAINAGE AREA.
4. USE WOOD SCREWS OR NAILS TO CONNECT WOOD COMPONENTS WITH NO SPACE ALLOWED BETWEEN BOARDS. TYPE C SILT FENCE FABRIC MUST BE FASTENED SECURELY WITH STAPLES OR NAILS TO OUTSIDE FACE OF BOARDS AND COVERING ALL BUTT-JOINTS BETWEEN BOARDS. OVERLAP ADDITIONAL SILT FENCE FABRIC A MINIMUM OF 12-INCHES.
5. REMOVE SEDIMENT WHEN IT REACHES ONE-THIRD THE HEIGHT OF SILT CONTROL GATE AND SILT FENCE FABRIC SHALL BE REPLACED WHEN DAMAGED OR DETERIORATED.

PAY ITEMS:

163-0501	CONSTRUCT AND REMOVE SILT CONTROL GATE, TP 1	(EA)
163-0502	CONSTRUCT AND REMOVE SILT CONTROL GATE, TP 2	(EA)
163-0503	CONSTRUCT AND REMOVE SILT CONTROL GATE, TP 3	(EA)
165-0085	MAINTENANCE OF SILT CONTROL GATE, TP 1	(EA)
165-0086	MAINTENANCE OF SILT CONTROL GATE, TP 2	(EA)
165-0087	MAINTENANCE OF SILT CONTROL GATE, TP 3	(EA)

BY	DATE	REVISION
PN	07-01-26	ADDED 56-____ DRWG. NO.
DLE	04-22-16	ADD. FABRIC & ADD. NOTES
TPC	01-19-11	ADD. & REV. SILT GATE NOTES
		REM. INLET SEDIMENT TRAP
	03-21-05	REV. LUMBER SIZES
GLO		REV. SPECIFICATION
MGR	10-22-02	ADDED PAYMENT NOTE

DEPARTMENT OF TRANSPORTATION
STATE OF GEORGIA

CONSTRUCTION DETAIL D-20

SILT CONTROL GATES FOR STRUCTURES

TYPES – 1, 2, AND 3

REV. & REDRAWN, DECEMBER 2000
NOT TO SCALE

NUMBER 56–

GDOT Georgia Department of Transportation | P. I. No.

SECTION A-A

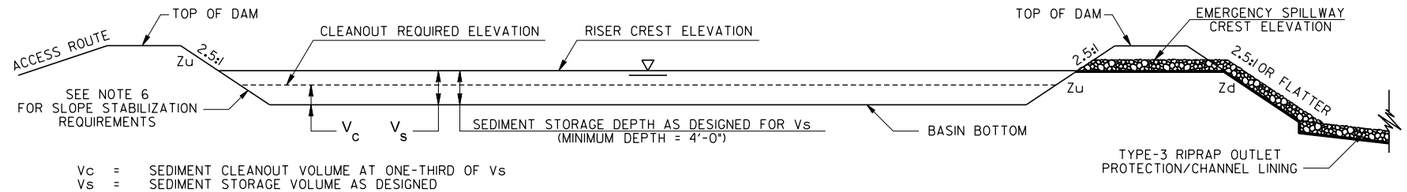

Vc = SEDIMENT CLEANOUT VOLUME AT ONE-THIRD OF Vs
Vs = SEDIMENT STORAGE VOLUME AS DESIGNED
Zu = UPSTREAM SIDE SLOPE
Zd = DOWNSTREAM SIDE SLOPE

SECTION B-B

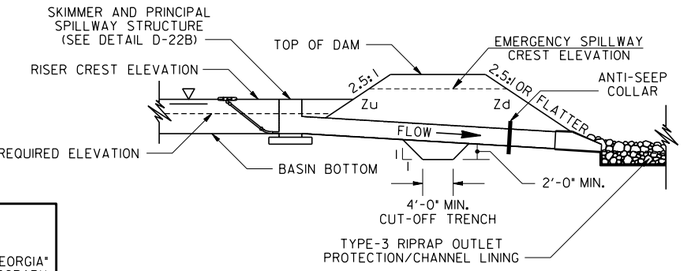

EMERGENCY SPILLWAY DETAIL

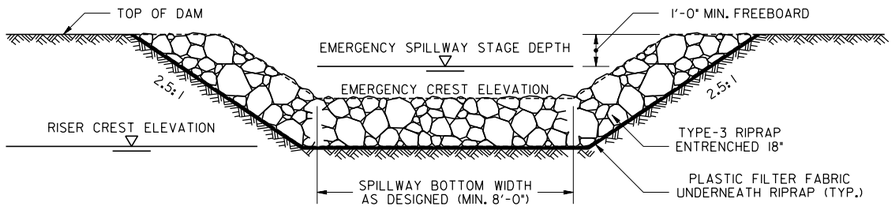

BAFFLE DETAIL

REFER TO THE LATEST EDITION OF THE "MANUAL FOR EROSION AND SEDIMENT CONTROL IN GEORGIA" FOR INFORMATION ON BAFFLE LAYOUT. BAFFLES LENGTHS AND LOCATION(S) WITHIN EACH TEMPORARY SEDIMENT BASIN SHALL BE PROVIDED IN THE ESPCP. SEE NOTE 5 FOR APPLICABILITY.

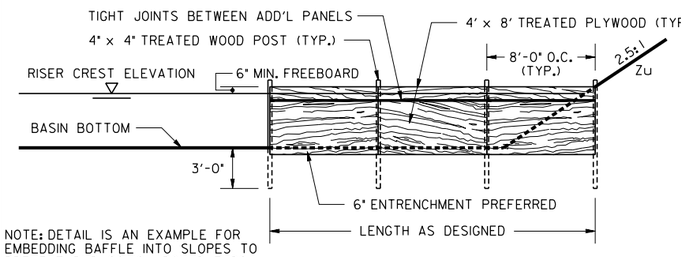

NOTE: DETAIL IS AN EXAMPLE FOR EMBEDDING BAFFLE INTO SLOPES TO PREVENT BYPASSING AROUND ENDS.

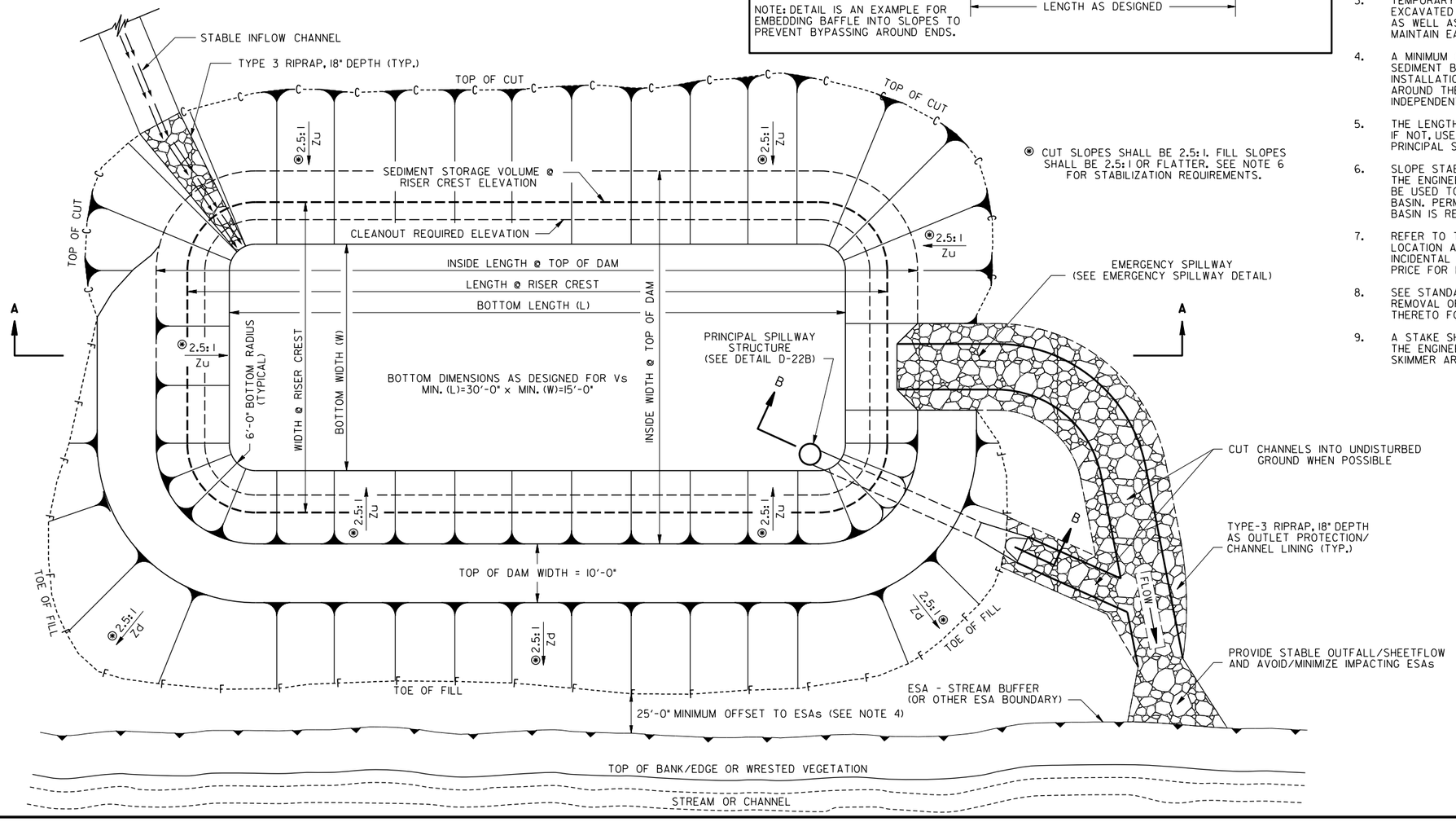

◉ CUT SLOPES SHALL BE 2.5:1. FILL SLOPES SHALL BE 2.5:1 OR FLATTER. SEE NOTE 6 FOR STABILIZATION REQUIREMENTS.

GENERAL NOTES:

1. A TEMPORARY SEDIMENT BASIN IS DESIGNED TO STORE A MINIMUM OF 67 CUBIC YARDS OF SEDIMENT PER ACRE OF CONTRIBUTING DRAINAGE AREA. A PRINCIPAL SPILLWAY IS DESIGNED TO CONVEY THE 2-YEAR, 24-HOUR STORM EVENT AND AN EMERGENCY SPILLWAY IS DESIGNED TO BE USED IN CONJUNCTION WITH THE PRINCIPAL SPILLWAY TO CONVEY THE 25-YEAR, 24-HOUR STORM EVENT.
2. A FLOATING SURFACE SKIMMER IS A REQUIRED BEST MANAGEMENT PRACTICE (BMP) TO DEWATER THE BASIN'S SEDIMENT STORAGE VOLUME WITHIN 24 TO 48 HOURS.

   CONTRACTOR MAY SUBMIT AN ACCEPTABLE ALTERNATE FLOATING SURFACE SKIMMER DESIGN FOR EACH CORRESPONDING TEMPORARY SEDIMENT BASIN. THE CONTRACTOR'S GSWCC LEVEL II DESIGN PROFESSIONAL SHALL SUBMIT THE ALTERNATE FLOATING SURFACE SKIMMER DESIGN.
3. TEMPORARY SEDIMENT BASINS ARE GENERALLY CONSTRUCTED AT THE TOE OF A SLOPE, EXCAVATED ON THE UPHILL SIDE, AND DAMMED ON THE DOWNHILL SIDE. SUFFICIENT EASEMENT AS WELL AS AN ACCESS ROUTE WITH 3:1 SLOPES OR LESS IS REQUIRED TO CONSTRUCT AND MAINTAIN EACH TEMPORARY SEDIMENT BASIN.
4. A MINIMUM OF 25'-0" SHOULD BE PROVIDED FROM THE CONSTRUCTION LIMITS OF THE TEMPORARY SEDIMENT BASIN TO AN ENVIRONMENTALLY SENSITIVE AREA (ESA). THIS AREA WOULD ALLOW THE INSTALLATION OF PERIMETER CONTROL BMPs OUTSIDE OF THE ESA WHILE MAINTAINING ACCESS AROUND THE TEMPORARY SEDIMENT BASIN. APPLICABLE PERIMETER CONTROL BMPs ARE INDEPENDENT OF THE TEMPORARY SEDIMENT BASIN AND WILL BE PAID FOR SEPARATELY.
5. THE LENGTH TO WIDTH RATIO AT THE RISER CREST ELEVATION SHALL BE NO LESS THAN 2:1. IF NOT, USE BAFFLES TO INCREASE THE EFFECTIVE FLOW LENGTH FROM THE INFLOW TO THE PRINCIPAL SPILLWAY TO MEET THE REQUIRED RATIO.
6. SLOPE STABILIZATION (EROSION CONTROL MATTING) SHALL BE INSTALLED ON ALL 2.5:1 SLOPES. THE ENGINEER MAY ALLOW BONDED FIBER MATRIX ON SOME SLOPES. PERMANENT GRASSING SHALL BE USED TO STABILIZE DISTURBED AREAS AFTER CONSTRUCTION OF THE TEMPORARY SEDIMENT BASIN. PERMANENT STABILIZATION MEASURES SHALL BE USED WHEN THE TEMPORARY SEDIMENT BASIN IS REMOVED.
7. REFER TO THE EROSION, SEDIMENTATION AND POLLUTION CONTROL PLAN (ESPCP) FOR THE LOCATION AND SPECIFIC DESIGN INFORMATION FOR EACH SEDIMENT BASIN. ALL ITEMS SHOWN AND INCIDENTAL ITEMS NECESSARY FOR CONSTRUCTION ARE TO BE INCLUDED IN THE OVERALL BID PRICE FOR EACH TEMPORARY SEDIMENT BASIN.
8. SEE STANDARD SPECIFICATION 163, AND SUPPLEMENTS THERETO FOR THE CONSTRUCTION AND REMOVAL OF TEMPORARY SEDIMENT BASINS. SEE STANDARD SPECIFICATION 165, AND SUPPLEMENTS THERETO FOR THE MAINTENANCE OF TEMPORARY SEDIMENT BASINS.
9. A STAKE SHALL BE PLACED NEAR THE PRINCIPAL SPILLWAY NOTING THE CLEANOUT ELEVATION. THE ENGINEER MAY DIRECT CONTRACTOR TO REMOVE UP TO 1 FOOT OF SEDIMENT AROUND THE SKIMMER AREA TO ENSURE FUNCTIONALITY OF THE SKIMMER AT NO ADDITIONAL COST.

PAY ITEMS:

163-0531	CONSTRUCT & REMOVE SEDIMENT BASIN, STA NO-	(EA)
165-0060	MAINTENANCE OF TEMPORARY SEDIMENT BASIN, STA NO-	(EA)

BY	REVISION	DATE
PN	ADDED 56-____ DRWG. NO.	07-01-26
DLE	BAFFLE, MISC. CLARIFICATIONS	11-28-18
JDG	EMERG. SPILLWAY & NOTES	06-02-14
	GENERAL NOTES AND	
	ANTIFLOTATION BLOCK	

DEPARTMENT OF TRANSPORTATION
STATE OF GEORGIA

CONSTRUCTION DETAIL D-22A
TEMPORARY SEDIMENT BASIN (SHEET 1 OF 2)

AUGUST 2011
NOT TO SCALE

NUMBER 56-

GDOT Georgia Department of Transportation | P. I. No.

SKIMMER AND PRINCIPAL SPILLWAY STRUCTURE

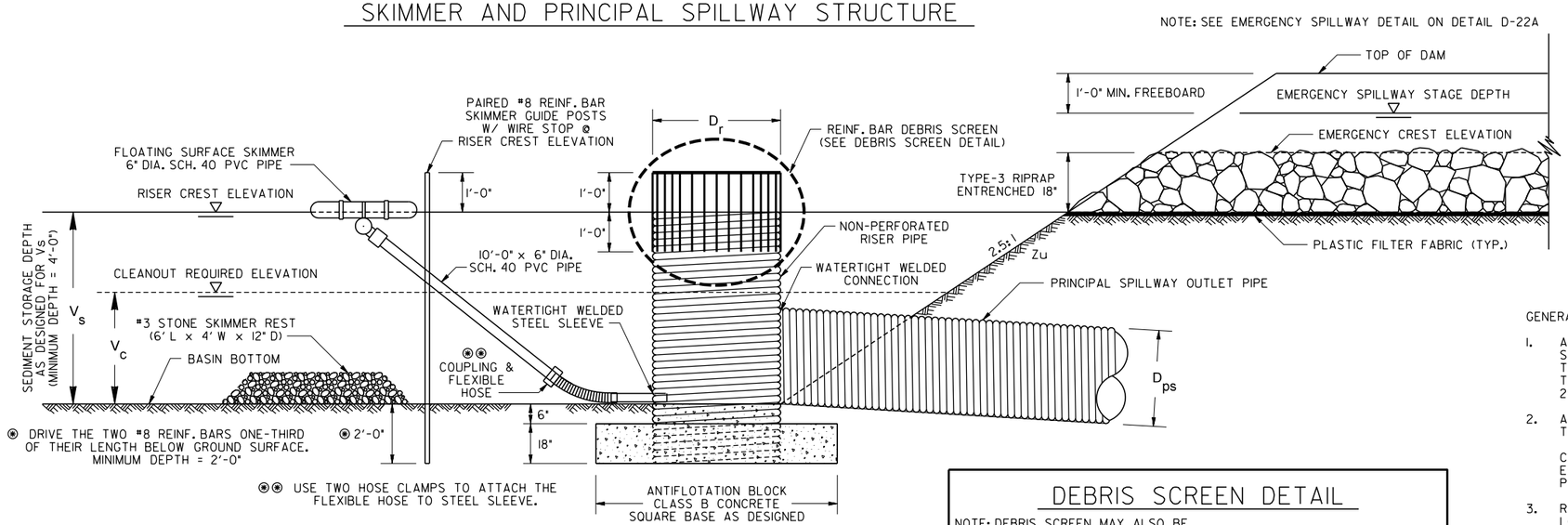

NOTE: PLACE RISER PIPE WITHIN EXCAVATION FOR ANTIFLOTATION BLOCK, POUR 18" CONCRETE OUTSIDE OF RISER, AND THEN POUR CONCRETE WITHIN RISER TO BASIN BOTTOM/OUTLET PIPE ELEVATION.

Dr = PRINCIPAL SPILLWAY RISER PIPE DIAMETER
Dps = PRINCIPAL SPILLWAY OUTLET PIPE DIAMETER
Vc = SEDIMENT CLEANOUT VOLUME AT ONE-THIRD OF Vs
Vs = SEDIMENT STORAGE VOLUME AS DESIGNED
Zu = UPSTREAM SIDE SLOPE
Zd = DOWNSTREAM SIDE SLOPE

DEBRIS SCREEN DETAIL

NOTE: DEBRIS SCREEN MAY ALSO BE REFERRED TO AS A TRASH RACK.

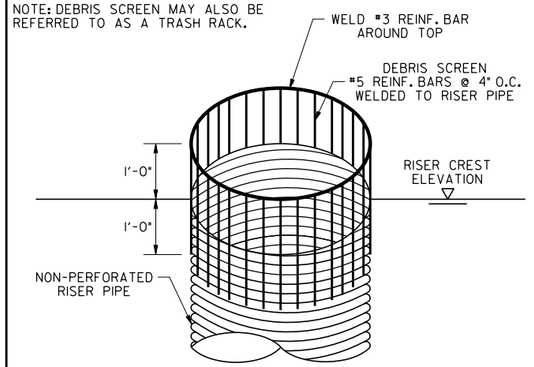

FLOATING SURFACE SKIMMER TOP VIEW DETAIL

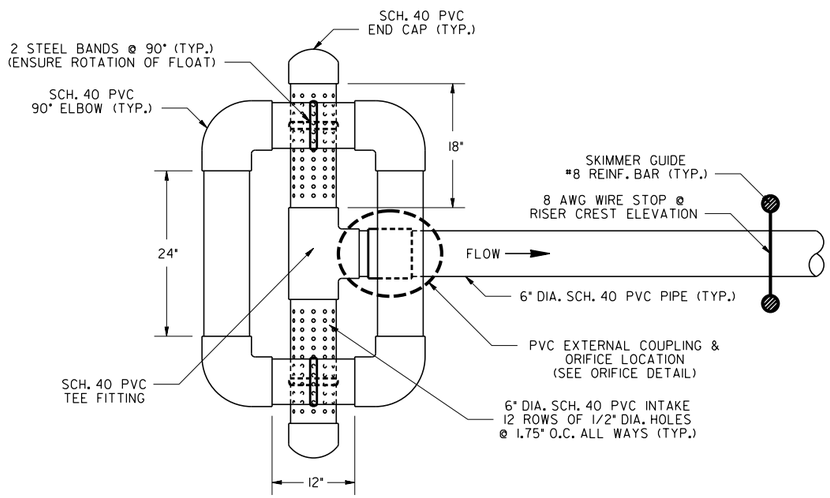

ORIFICE DETAIL

THE CONTRACTOR MAY SUBMIT AN ACCEPTABLE ALTERNATE METHOD FOR CONSTRUCTING THE ORIFICE.

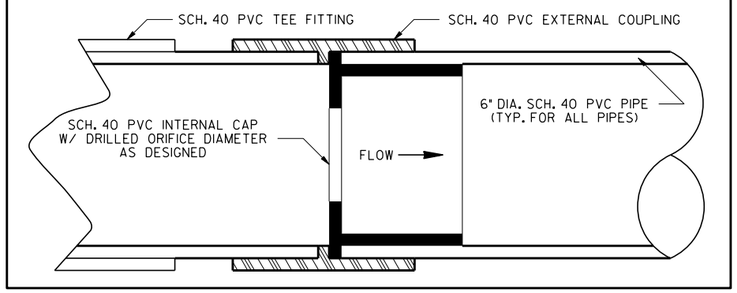

DRILLED ORIFICE DIAMETER (IN) TABLE							
1.0	1.5	2.0	2.5	3.0	4.0	5.0	6.0
DISCHARGE WITH 0.75 FEET OF HEAD (CFS)							
0.02	0.05	0.09	0.15	0.21	0.38	0.59	0.85

NOTE: THE HYDRAULIC HEAD IS APPROXIMATE AND MEASURED FROM THE WATER SURFACE TO THE CENTROID OF THE ORIFICE WITH A 0.62 DISCHARGE COEFFICIENT.

GENERAL NOTES:

1. A TEMPORARY SEDIMENT BASIN IS DESIGNED TO STORE A MINIMUM OF 67 CUBIC YARDS OF SEDIMENT PER ACRE OF CONTRIBUTING DRAINAGE AREA. A PRINCIPAL SPILLWAY IS DESIGNED TO CONVEY THE 2-YEAR, 24-HOUR STORM EVENT AND AN EMERGENCY SPILLWAY IS DESIGNED TO BE USED IN CONJUNCTION WITH THE PRINCIPAL SPILLWAY TO CONVEY THE 25-YEAR, 24-HOUR STORM EVENT.
2. A FLOATING SURFACE SKIMMER IS A REQUIRED BEST MANAGEMENT PRACTICE (BMP) TO DEWATER THE BASIN'S SEDIMENT STORAGE VOLUME WITHIN 24 TO 48 HOURS.

   CONTRACTOR MAY SUBMIT AN ACCEPTABLE ALTERNATE FLOATING SURFACE SKIMMER DESIGN FOR EACH CORRESPONDING TEMPORARY SEDIMENT BASIN. THE CONTRACTOR'S GSWCC LEVEL II DESIGN PROFESSIONAL SHALL SUBMIT THE ALTERNATE FLOATING SURFACE SKIMMER DESIGN.
3. REFER TO THE EROSION, SEDIMENTATION AND POLLUTION CONTROL PLAN (ESPCP) FOR THE LOCATION AND SPECIFIC DESIGN INFORMATION FOR EACH SEDIMENT BASIN. ALL ITEMS SHOWN AND INCIDENTAL ITEMS NECESSARY FOR CONSTRUCTION ARE TO BE INCLUDED IN THE OVERALL BID PRICE FOR EACH TEMPORARY SEDIMENT BASIN.
4. SEE STANDARD SPECIFICATION 163, AND SUPPLEMENTS THERETO FOR THE CONSTRUCTION AND REMOVAL OF TEMPORARY SEDIMENT BASINS. SEE STANDARD SPECIFICATION 165, AND SUPPLEMENTS THERETO FOR THE MAINTENANCE OF TEMPORARY SEDIMENT BASINS.
5. A STAKE SHALL BE PLACED NEAR THE PRINCIPAL SPILLWAY NOTING THE CLEANOUT ELEVATION. THE ENGINEER MAY DIRECT CONTRACTOR TO REMOVE OF UP TO 1 FOOT OF SEDIMENT AROUND SKIMMER AREA TO ENSURE FUNCTIONALITY OF THE SKIMMER AT NO ADDITIONAL COST.
6. REFER TO DETAIL D-22A FOR ADDITIONAL INFORMATION ON THE TEMPORARY SEDIMENT BASIN.

PAY ITEMS:
163-0531 CONSTRUCT & REMOVE SEDIMENT BASIN, STA NO- (EA)
165-0060 MAINTENANCE OF TEMPORARY SEDIMENT BASIN, STA NO- (EA)

BY	REVISION	DRWG. NO.	DATE
PN	ADDED 56-		07-01-26
DLE	NOTES & EMERG. SPILLWAY		11-28-18

DEPARTMENT OF TRANSPORTATION
STATE OF GEORGIA

CONSTRUCTION DETAIL
D-22B
TEMPORARY SEDIMENT BASIN
(SHEET 2 OF 2)

AUGUST 2011
NOT TO SCALE

NUMBER
56-

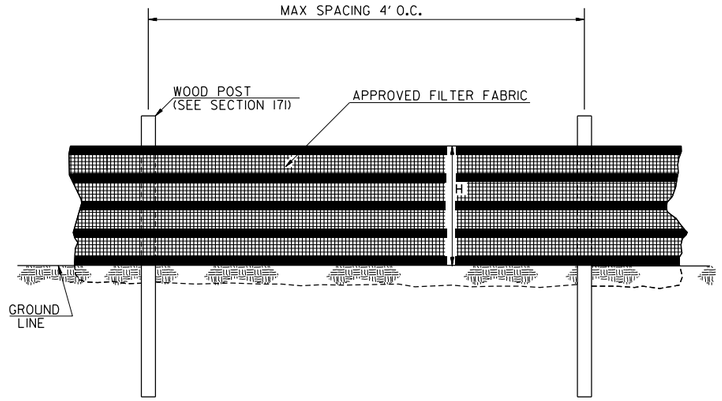

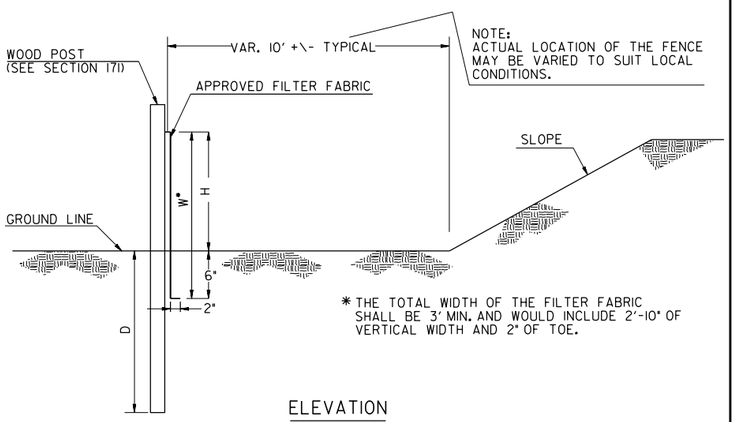

ELEVATION

SINGLE ROW TYPE C SILT FENCE WITH HIGH TENSILE POLYPROPYLENE INTEGRATED SUPPORT WOVEN FABRIC

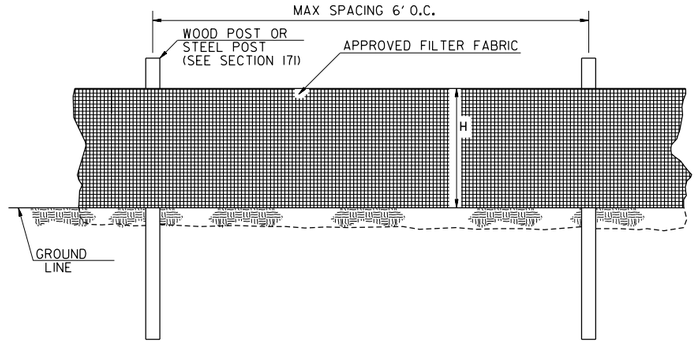

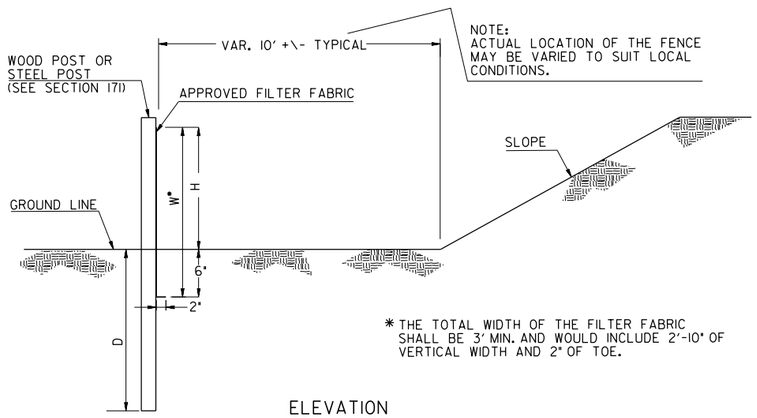

ELEVATION

SINGLE ROW TYPE A SILT FENCE

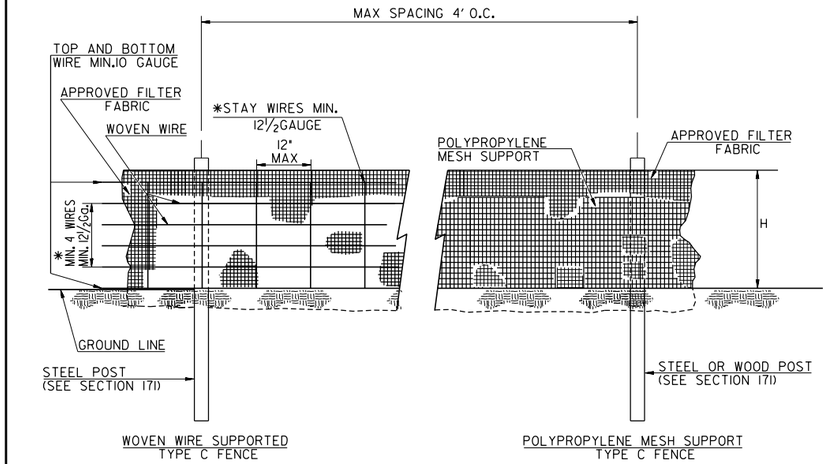

WOVEN WIRE SUPPORTED
TYPE C FENCE

POLYPROPYLENE MESH SUPPORT
TYPE C FENCE

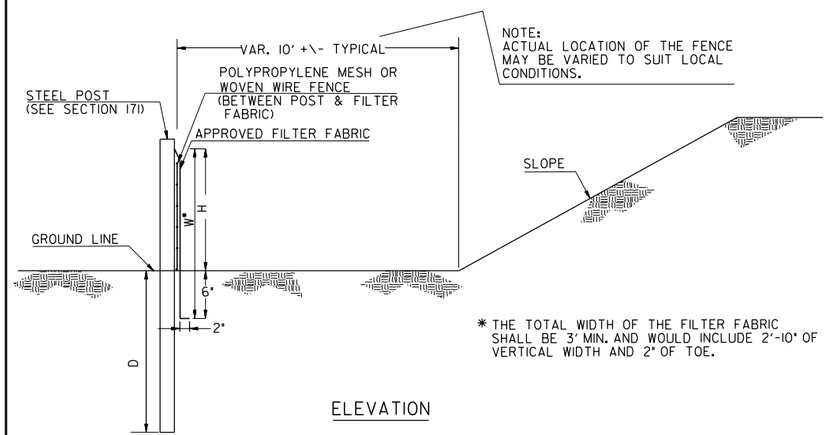

ELEVATION

SINGLE ROW TYPE C SILT FENCE WITH WOVEN WIRE SUPPORT OR POLYPROPYLENE MESH SUPPORT

FENCE TYPE	POST LENGTH	H	D	W*	TYPICAL USES
TYPE "A"	4 FT.	2'-4"	1'-6"	3'-0"	
TYPE "C"	4 FT.	2'-4"	1'-6"	3'-0"	AT BRIDGE END ROLLS, DOUBLE ROW ALONG STREAMS, WETLANDS AND ENVIRONMENTALLY SENSITIVE AREAS FOR USE OF THIS MATERIAL IN FABRIC CHECKDAMS SEE D-24D.

NOTES:

1. WIRE STAPLES SHALL BE AT LEAST 17 GAUGE, WITH LEGS AT LEAST 1/2 INCHES LONG AND A CROWN AT LEAST 3/4 INCHES WIDE. NAILS SHALL BE AT LEAST 14 GAUGE, 1 INCH LONG , WITH BUTTON HEADS AT LEAST 3/4 INCHES WIDE.
2. SEE SECTION 171 FOR PLACEMENT OF NAILS OR STAPLES FOR TYPE A AND TYPE C FENCES.
3. THE VERTICAL WIRES FOR THE WOVEN WIRE SUPPORT FENCE SHALL HAVE A MAXIMUM SPACING OF 12 INCHES. THE TOP AND BOTTOM WIRES SHALL BE AT LEAST 10 GAUGE AND ALL OTHER WIRES SHALL BE AT LEAST 12½ GAUGE.
4. TEMPORARY SILT FENCE INSTALLATION IS DIFFERENT THAN THE SILT RETENTION BARRIER INSTALLATION.
5. SEE SECTION 171 FOR SILT FENCE SPECIFICATIONS.
6. SEE SECTION 894 FOR FENCING SPECIFICATIONS.
7. SEE QPL-36 FOR A LIST OF APPROVED SILT FENCE FABRIC.
8. TEMPORARY SILT FENCE SHALL NOT BE PLACED WITHIN STATE WATERS UNLESS PERMITTED.

GDOT Georgia Department of Transportation

P. I. No.

BY	REVISION	DATE
PN	ADDED 56-_____ DRWG. NO.	07-01-26
AL	ADDED HIGH TENSILE POLYPROPYLENE INTEGRATED FABRIC	09-2022

DEPARTMENT OF TRANSPORTATION
STATE OF GEORGIA

CONSTRUCTION DETAIL
D-24A
TEMPORARY SILT FENCE
(SHEET 1 OF 4)

JANUARY 2011
NOT TO SCALE

NUMBER
56-

GDOT Georgia Department of Transportation | P. I. No.

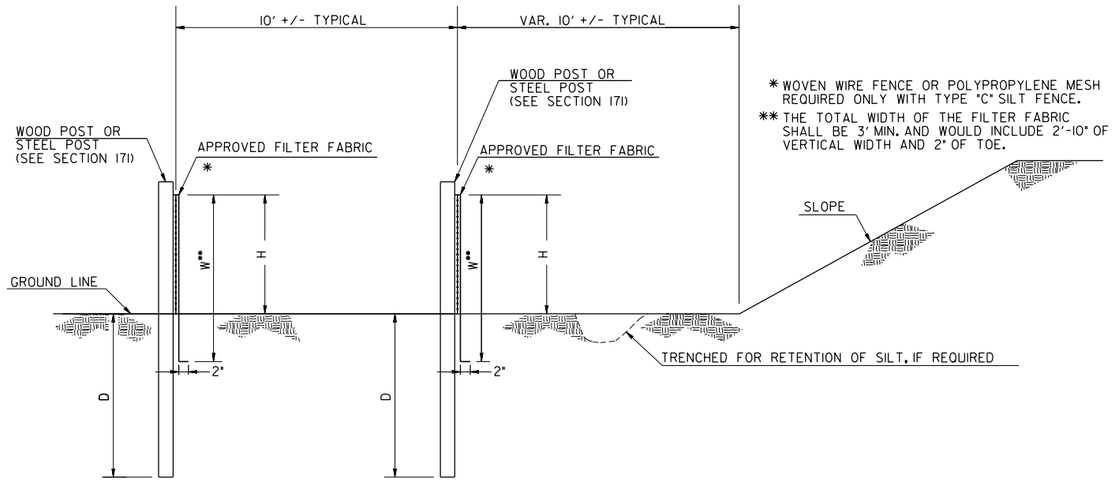

ELEVATION

DOUBLE ROW SILT FENCE

FENCE TYPE	POST LENGTH	H	D	W**	TYPICAL USES
TYPE "A"	4 FT.	2'-4"	1'-6"	3'-0"	
TYPE "C"	4 FT.	2'-4"	1'-6"	3'-0"	AT BRIDGE END ROLLS, DOUBLE ROW ALONG STREAMS, WETLANDS AND ENVIRONMENTALLY SENSITIVE AREAS FOR USE OF THIS MATERIAL IN FABRIC CHECKDAMS SEE D-24D.

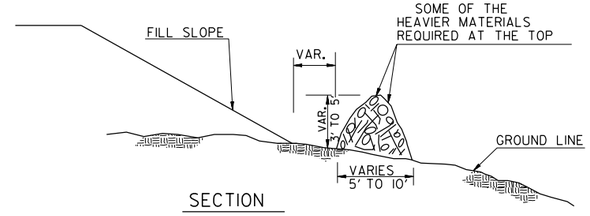

SECTION

NOTE: INTERMINGLE BRUSH, LOGS, ETC. SO AS NOT TO FORM A SOLID DAM.



FRONT VIEW

NOTE: BRUSH BARRIER(S) WILL BE INCLUDED IN PAYMENT FOR CLEARING & GRUBBING.

BRUSH BARRIER DETAILS
(FOR USE IN RURAL AREAS)

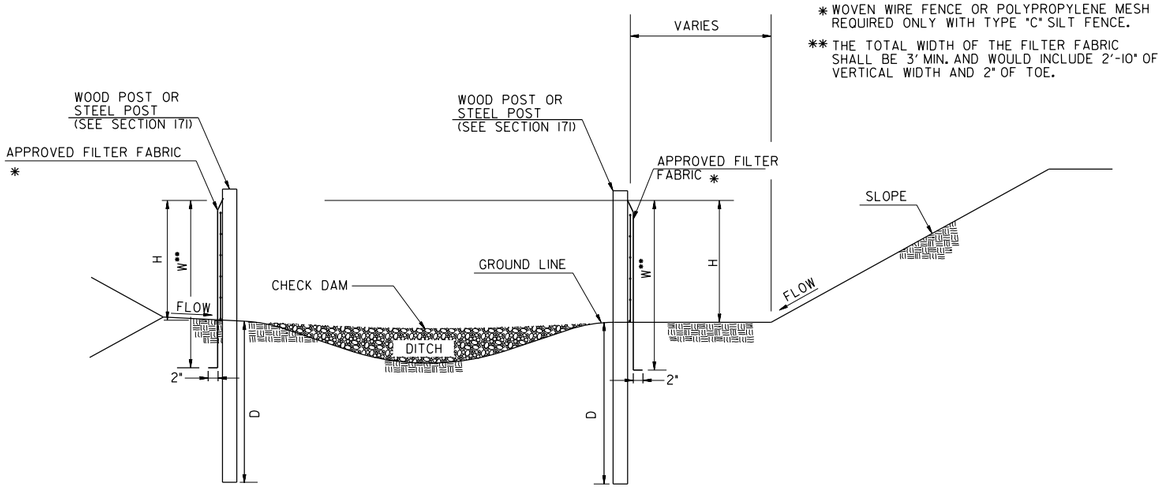

ELEVATION

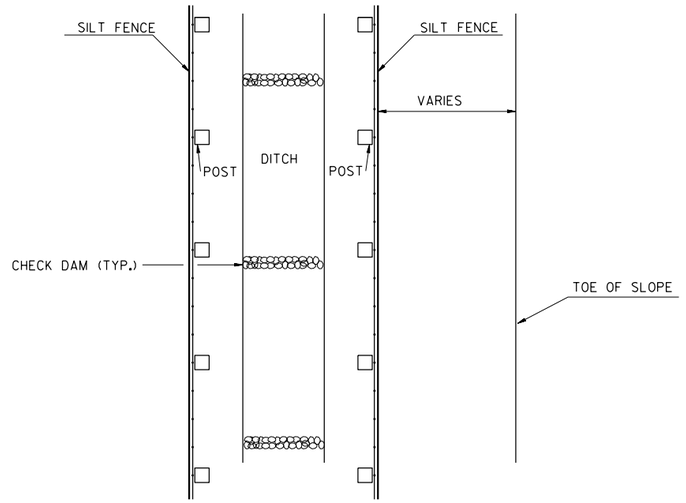

PLAN

NOTE:
TEMPORARY SILT FENCE SHALL NOT BE PLACED WITHIN STATE WATERS UNLESS PERMITTED.

FENCE TYPE	POST LENGTH	H	D	W**	TYPICAL USES
TYPE "A"	4 FT.	2'-4"	1'-6"	3'-0"	
TYPE "C"	4 FT.	2'-4"	1'-6"	3'-0"	AT BRIDGE END ROLLS, DOUBLE ROW ALONG STREAMS, WETLANDS AND ENVIRONMENTALLY SENSITIVE AREAS FOR USE OF THIS MATERIAL IN FABRIC CHECKDAMS SEE D-24D.

SILT FENCE
PERIMETER INSTALLATION ALONG DITCH SECTION

BY	REVISION	DATE
PN	ADDED 56-____ DRWG NO.	07-01-26
BAS	FABRIC WIDTH CLARIFICATION	09-2022

DEPARTMENT OF TRANSPORTATION
STATE OF GEORGIA

CONSTRUCTION DETAIL
D-24B
TEMPORARY SILT FENCE
(SHEET 2 OF 4)

BERM DITCH, INSTALLATION, BRUSH BARRIER

REV. AND REDRAWN JAN. 2011
NOT TO SCALE

NUMBER 56-

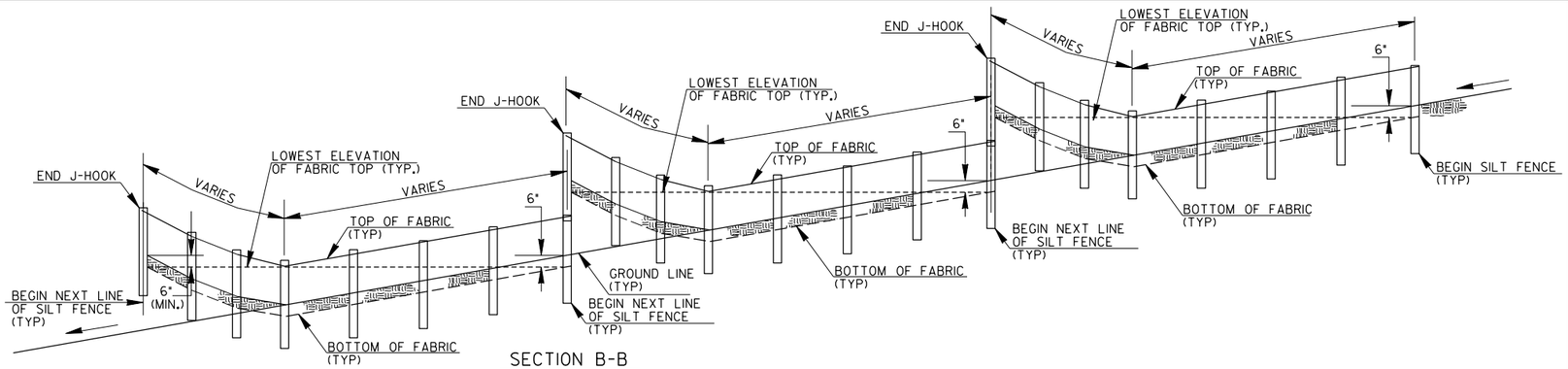

SECTION B-B

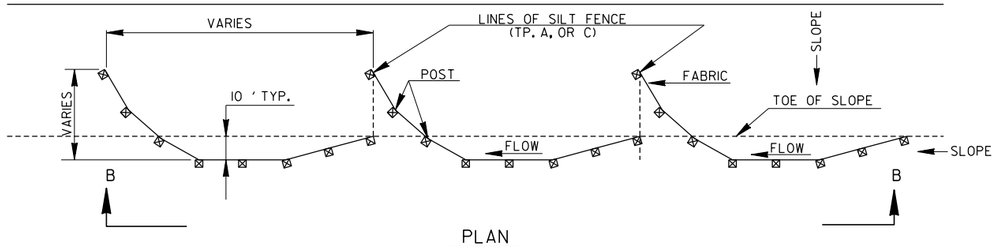

PLAN

SINGLE ROW SILT FENCE

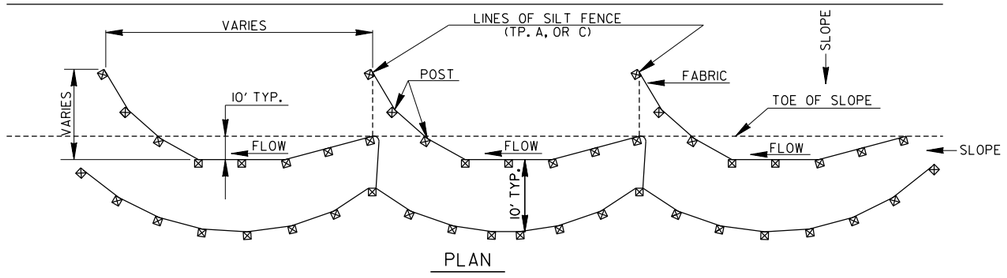

PLAN

DOUBLE ROW SILT FENCE

TYPICAL J HOOK SPACING		
SLOPE PERCENT	TYPE OF SILT FENCE	MINIMUM SPACING (FEET)
1% TO 2%	TYPE A OR TYPE C	100' ±
2% TO 3%	TYPE A OR TYPE C	50' ±
3% TO 4%	TYPE C	50' ±
4% TO 5%	TYPE C	25' ±

NOTE:

1. IF THE GRADE IS BETWEEN 0 TO 1 PERCENT, THE SILT FENCE SHALL BE PLACED ACROSS THE DITCH.

2. TEMPORARY SILT FENCE SHALL NOT BE PLACED WITHIN STATE WATERS UNLESS PERMITTED.

GDOT Georgia Department of Transportation — P. I. No.

TYPICAL LOCATION AROUND DROP INLETS

ALT. TO PREFABRICATED INLET SEDIMENT TRAP FOR AREAS WITH SLOPES ≤ 5%

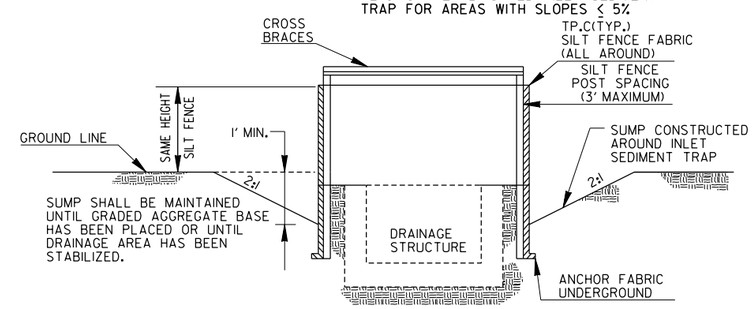

ELEVATION

* CROSS BRACING REQUIRED WHEN USING "ALTERNATE" TYPE C PRODUCTS WHICH USE WOOD POSTS.

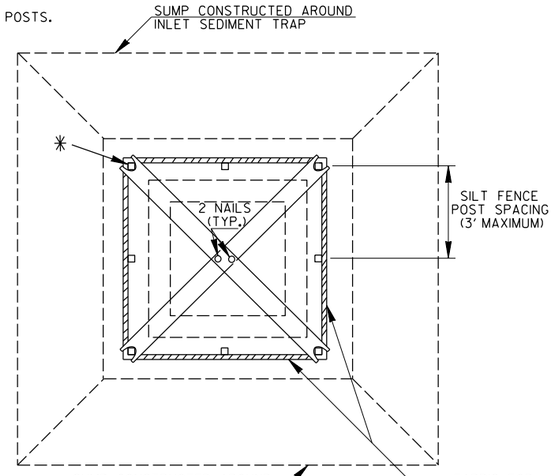

PLAN

CROSS BRACES:

TWO - 2 X 4's WITH ENDS TO FIT POST, PROVIDING STURDY SUPPORT, OR AN APPROVED ALTERNATE

NOTE:
PAYMENT AS INLET SEDIMENT TRAP PER EACH.

NOTE:
SEE SEPARATE SHEET ENTITLED "TEMPORARY SILT FENCE DETAILS" FOR SILT FENCE ERECTION DETAILS.

NOTE:
THE DRAINAGE AREA ENTERING THE INLET SEDIMENT TRAP SHALL BE NO GREATER THAN ONE ACRE.

TYPICAL CONSTRUCTION SEQUENCE FOR INLET SEDIMENT TRAP ALTERNATE

1. EXCAVATE APPROXIMATELY 4" TO 6" BELOW THE TOP OF THE INLET STRUCTURE.

2. PLACE THE FRAME ONTO THE INLET STRUCTURE, ENSURING PROPER SEATING OF FRAME TO STRUCTURE.

3. SLIDE THE FILTER OVER THE FRAME.

4. FILL THE FILTER POCKETS WITH SOIL, #57 GRAVEL OR EQUIVALENT. THE FILTER POCKETS SHOULD BE COMPLETELY FILLED TO ENSURE A GOOD SEAL BETWEEN THE GROUND AND INLET STRUCTURE.

5. BACK FILL AROUND THE FRAME AND FILTER ASSEMBLY IS NOT REQUIRED TO COMPLETE INSTALLATION; HOWEVER, BACK FILLING MAY BE NECESSARY TO COMPLETE EXCAVATION REQUIREMENTS FOR THE SITE.

NOTE:
INLET SEDIMENT TRAP ALTERNATE SHALL BE AS APPROVED BY THE GA. D.O.T. OFFICE OF MATERIALS & RESEARCH. DETAILS & SPECIFICATIONS NOT SHOWN ARE PER THE MANUFACTURER'S REQUIREMENTS.

(PLASTIC ALTERNATE)

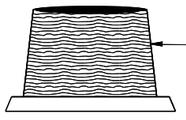

NON-WOVEN FILTER COVER (SEC. 881.2.05)

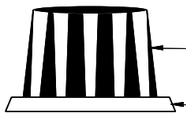

1/4" MIN. THICK HIGH DENSITY POLYETHELENE FRAME (OR APPROVED ALTERNATE)

BASE OF FRAME SHAPED & SIZED TO FIT INLET TOP

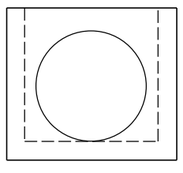

SIDE VIEW

NOTE: WHERE INLET SEDIMENT TRAPS ARE SPECIFIED, EITHER THE PLASTIC ALTERNATE (LEFT) OR THE METAL ALTERNATE (RIGHT) MAY BE USED AS APPROVED BY THE ENGINEER.

(METAL ALTERNATE)

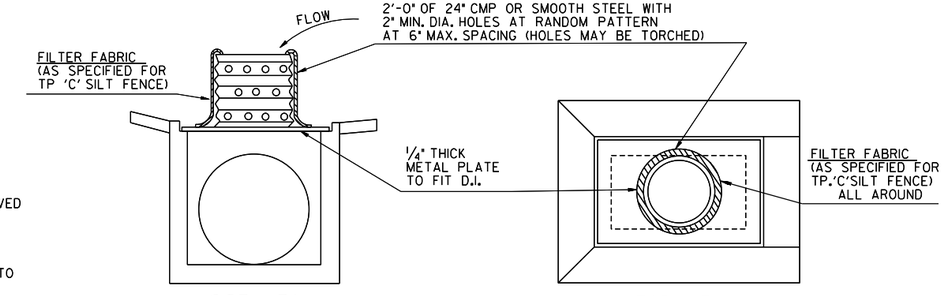

SIDE VIEW

TOP VIEW

NOTE:
INLET SEDIMENT TRAP AND INLET TO BE BUILT CONTINUOUS WITH PIPE

NOTE:
PAYMENT AS INLET SEDIMENT TRAP PER EACH

NOTE: SEE SEPARATE DETAILS FOR SILT FENCE AROUND DROP INLETS.

INLET SEDIMENT TRAP - FOR DROP INLETS

		07-01-26	09-2022	DATE
		ADDED 56-____ DRWG NO.		
		PLACEMENT CLARIFICATION		REVISION
		PN	BAS	BY

DEPARTMENT OF TRANSPORTATION
STATE OF GEORGIA

CONSTRUCTION DETAIL D-24C

TEMPORARY SILT FENCE (SHEET 3 OF 4)

J-HOOK, INLET SEDIMENT TRAPS

JANUARY 2011
NOT TO SCALE

NUMBER 56-

GDOT Georgia Department of Transportation | P. I. No.

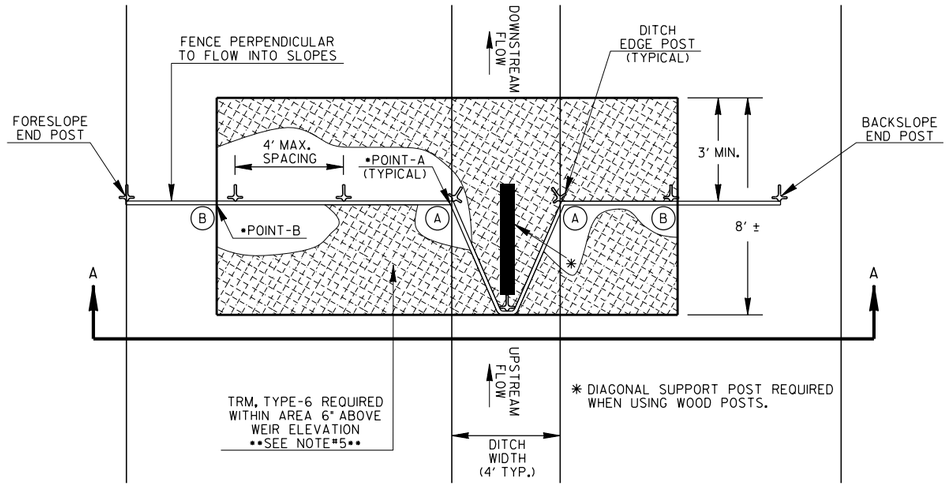

PLAN VIEW

TYPICAL FABRIC CHECK DAM SPACING	
GRADE OF DITCH	MINIMUM SPACING (FEET)
LESS THAN 1%	100' ±
1% TO 3%	75' ±
3% TO 6%	50' ±
6% TO 8%	25' ±

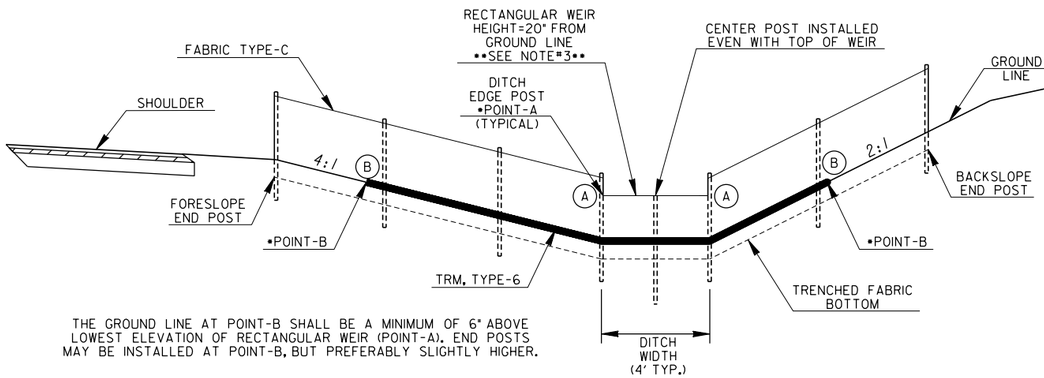

THE GROUND LINE AT POINT-B SHALL BE A MINIMUM OF 6" ABOVE LOWEST ELEVATION OF RECTANGULAR WEIR (POINT-A). END POSTS MAY BE INSTALLED AT POINT-B, BUT PREFERABLY SLIGHTLY HIGHER.

SECTION A-A

NOTE: CROSS-SECTION SHOWN IS AN EXAMPLE OF A TYPICAL CUT SECTION WITH A 4-FT FLAT BOTTOM DITCH. ACTUAL FABRIC CHECK DAMS SHALL BE INSTALLED SIMILARLY ACCORDING TO ROADWAY CROSS-SECTIONS.

TURF REINFORCEMENT MATTING ANCHOR

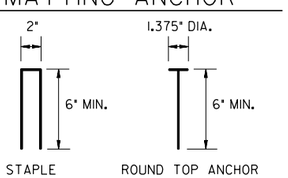

NOTE: TURF REINFORCEMENT MATTING SHALL BE ANCHORED WITH 8-GAUGE METAL STAPLES OR ROUND TOP ANCHORS. ANCHORS SHALL BE LONG ENOUGH TO PROVIDE SUFFICIENT GROUND PENETRATION TO RESIST PULL OUT.

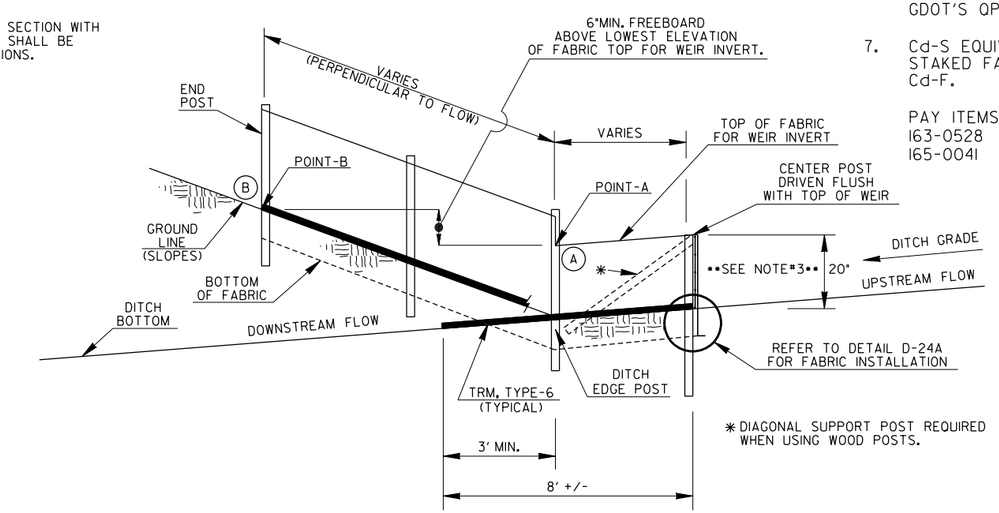

NOTES:

1. FABRIC CHECK DAMS MAY BE USED FOR FLOWS UP TO 2.0-CFS. A ROCK FILTER DAM SHALL BE USED AT THE DOWNSTREAM POINT FOR FLOWS GREATER THAN 2.0-CFS.

2. FABRIC CHECK DAMS SHALL NOT BE PLACED WITHIN FLOWING STATE WATERS.

3. FABRIC CHECK DAMS MAY BE USED IN DITCHES WITH DEPTHS AT LEAST 26-IN. IF DITCH DEPTH IS LESS THAN 26-IN, THE WEIR INVERT MAY BE LOWERED SLIGHTLY IN THE FIELD TO PROVIDE 6-IN MINIMUM FREEBOARD ABOVE POINT-A OR TO MATCH SPACING OF WIRE SUPPORT. THE WEIR HEIGHT SHALL BE NO LESS THAN 15-IN. THE DESIGNER SHALL CONSIDER OTHER APPROPRIATE BMPs FOR CONCENTRATED FLOW FOR DITCH DEPTHS LESS THAN 26-IN.

4. THE FOLLOWING STEPS ARE RECOMMENDED FOR PROPER FABRIC CHECK DAM INSTALLATION:

   A) DETERMINE DITCH CENTERLINE AND USE A LINE LEVEL OR OTHER MEANS TO FIND POINT-B WITHIN THE DITCH FORESLOPE AND BACKSLOPE TO PROVIDE 6-IN MINIMUM FREEBOARD ABOVE POINT-A.

   B) CREATE TRENCH 6-IN BELOW DITCH GRADE TO FIT LAYOUT FROM STEP-A WITH MINIMAL SOIL DISTURBANCE.

   C) LAYOUT TURF REINFORCEMENT MATTING (TRM), TYPE-6 TO PROVIDE PROTECTION A MINIMUM LENGTH OF 8-FT DOWNSTREAM OF CENTER POST TO FUNCTION AS A SPLASH PAD TO PREVENT SCOURING. ADDITIONAL NECESSARY TRM SHALL BE OVERLAPPED 3-FT. THE WIDTH SHALL BE THE DISTANCE BETWEEN POINT-B ON THE DITCH FORESLOPE AND POINT-B ON BACKSLOPE.

   D) INSTALL FENCE POSTS THROUGH TRM WITHIN TRENCH. CENTER POST AND POSTS WITHIN WEIR AREA SHALL BE INSTALLED FLUSH WITH WEIR. CUT TRM WITHIN TRENCH FOLLOWING CHECK DAM LAYOUT AND SAVE UPSTREAM PORTION OF TRM FOR FURTHER USE AS PER STEP F BELOW.

   E) PROPERLY INSTALL TYPE-C SILT FENCE. TRENCH BACKFILL SHALL BE COMPACTED WITH A HAND TAMPER, JUMPING JACK COMPACTOR, OR PLATE COMPACTOR TO PREVENT UNDERMINING.

   F) INSTALL PREVIOUSLY CUT TRM FROM STEP-D UPSTREAM AGAINST CHECK DAM. INSTALLING UPSTREAM AND DOWNSTREAM TRM ACCORDING TO DETAIL D-35 FOR THIS TEMPORARY APPLICATION IS NOT REQUIRED. HOWEVER, TRM SHALL HAVE PROPER CONTACT WITH GROUND SURFACE, ANCHORED 6-IN MAXIMUM SPACING ALONG THE EDGES, AND ADEQUATELY WITHIN THE MATTED AREA.

5. TEMPORARY INSTALLATION OF TRM WITH FABRIC CHECK DAMS SHALL BE INCLUDED IN THE LINEAR COST OF THE CONSTRUCTION, REMOVAL, AND MAINTENANCE OF EACH FABRIC CHECK DAM. NO ADDITIONAL PAYMENT WILL BE MADE.

6. GSWCC EQUIVALENT BMPS ARE AVAILABLE IN THE EQUIVALENT BMP LIST ON THE GSWCC DOCUMENT LIST PAGE AND MAY BE USED IN PLACE OF STANDARD BMPS SHOWN ON THE LEGEND WITH A GDOT ACCEPTANCE LETTER OR WHEN LISTED ON GDOT'S QPL.

7. Cd-S EQUIVALENT BMPS MEETING THE ABOVE NOTE, WHICH ARE COMPRISED OF STAKED FABRIC AND OTHER FABRIC PRODUCTS, MAY BE USED IN PLACE OF Cd-F.

PAY ITEMS:
163-0528 CONSTRUCT & REMOVE FABRIC CHECK DAM, TYPE-C SILT FENCE (LF)
165-0041 MAINTENANCE OF CHECK DAMS - ALL TYPES (LF)

BY	REVISION	DATE
PN	ADDED 56-____ DRWG. NO.	07-01-26
	ADDED EQUIV. BMP NOTES	
	REV. NOTE 4D	

DEPARTMENT OF TRANSPORTATION
STATE OF GEORGIA

CONSTRUCTION DETAIL D-24D
TEMPORARY SILT FENCE (SHEET 4 OF 4)
FABRIC CHECK DAM

REV. AND REDRAWN, JULY 2015
NOT TO SCALE

NUMBER 56-

GDOT Georgia Department of Transportation | P. I. No. XXXXXXX

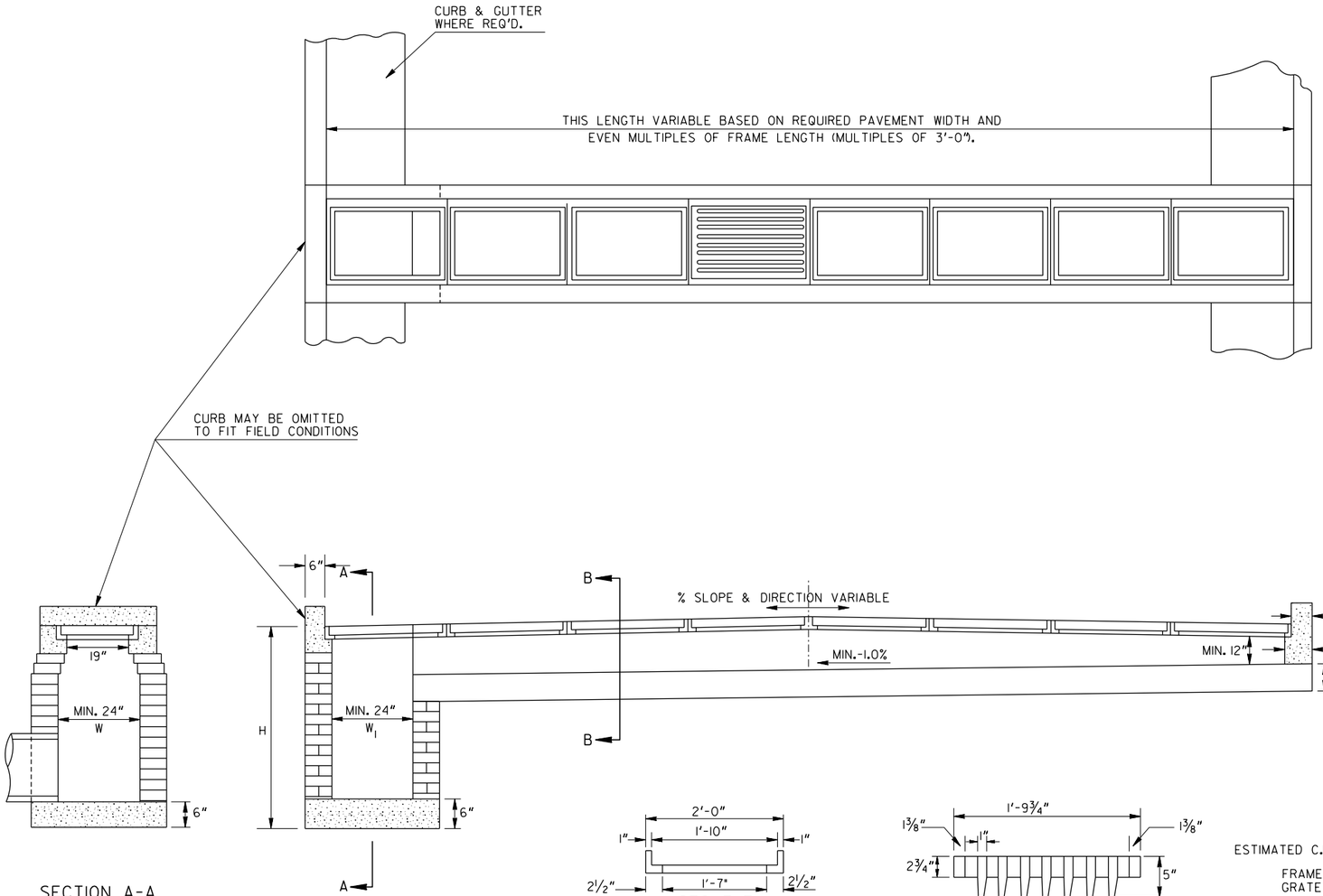

DIMENSIONS FOR DROP INLET			
PIPE	MIN. H	W	W_1
18"	4'-4"	2'-0"	2'-0"
24"	5'-0"	2'-6"	2'-6"
30"	5'-6"	3'-1"	3'-1"
36"	6'-0"	3'-8"	3'-8"

SECTION A-A

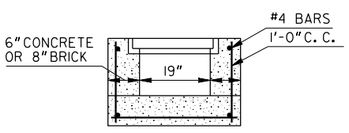

SECTION B-B

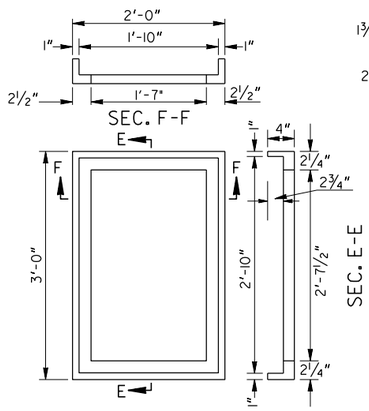

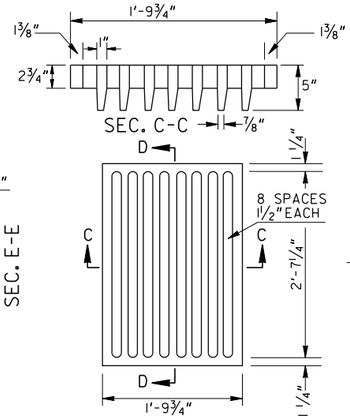

ESTIMATED C.I. WEIGHTS

FRAME 160 LBS.
GRATE 320 LBS.

CITY OF ATLANTA TYPE B GRATE AND FRAME

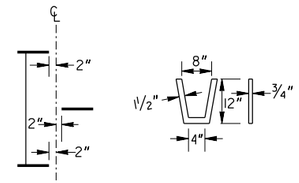

CAST IRON STEPS

NUMBER AND LOCATION OF STEPS WILL BE AS DIRECTED BY ENGINEER. AN ALTERNATE STEP MAY BE SUBSTITUTED IF APPROVED BY THE LABORATORY.

DEPARTMENT OF TRANSPORTATION
STATE OF GEORGIA

CONSTRUCTION DETAIL

SPECIAL DESIGN GRATE INLET FOR DIRVEWAYS

DATE | REVISION | BY

NOVEMBER 1975
NOT TO SCALE

NUMBER D-27

GDOT Georgia Department of Transportation | P. I. No. XXXXXXX

SECTIONAL DETAIL (TOP)

(SHOWN FOR CATCH BASIN, SIMILAR FOR DROP INLET)

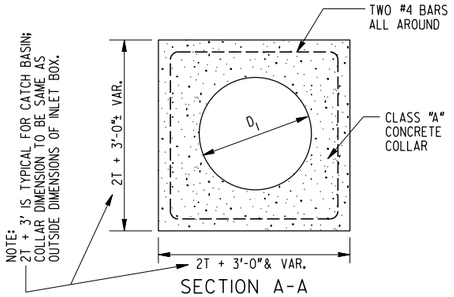

SECTION A-A

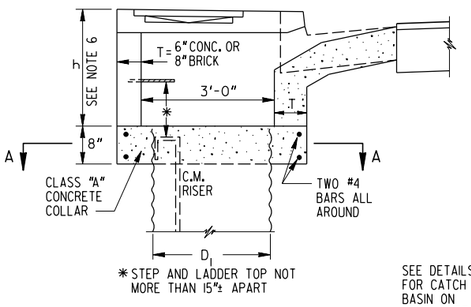

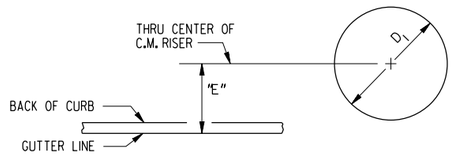

DETAIL FOR LOCATING CATCH BASIN RISER BACK OF CURB

CATCH BASIN STANDARD NO.	CURB HEIGHT	MIN. h	"E"
1033 D	6"	2'-0"	2'-0"
	8"	2'-2"	2'-0"
1033 E	4"	2'-0"	3'-0"
1033 F	4"	1'-11"	4'-0"
	6"	2'-1"	4'-0"
	8"	2'-1"	3'-0"
	10"	2'-1"	2'-0"
1034 D	6"	2'-1"	2'-0"
	8"	2'-2"	2'-0"
1034 E	4"	2'-0"	3'-0"
1034 F	4"	1'-11"	4'-0"
	6"	2'-1"	4'-0"
	8"	2'-1"	3'-0"
	10"	2'-1"	2'-0"

LADDER DETAILS

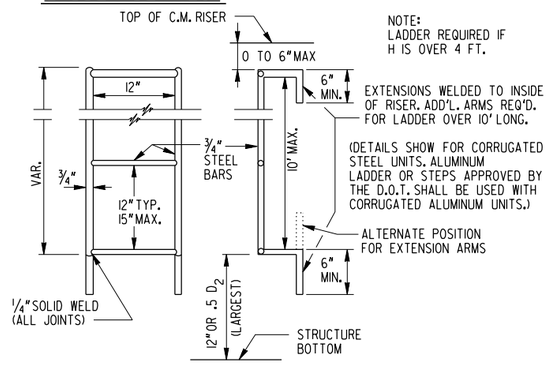

RISER REDUCER DETAIL

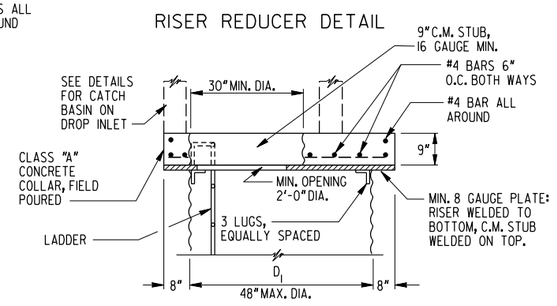

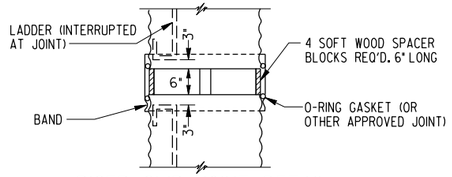

RISER SLIP JOINT DETAIL

(FOR USE IN RISERS OVER 10 FT. IN HEIGHT)

GENERAL NOTES:

1. SPECIFICATIONS: GEORGIA STANDARD, CURRENT EDITION & SUPPLEMENTS THERETO.
2. UNITS ARE TO BE SHOP FABRICATED WITH ANY COATINGS REPAIRED AFTER WELDING OR UNIT COATED IF REQUIRED AFTER WELDING. GALVANIZING, BITUMINOUS COATING, OR OTHER SPECIFIED PROTECTION SHALL BE THE SAME FOR FABRICATED UNITS AS IS REQUIRED FOR THE ADJOINING PIPES. GALVANIZE REPAIR SHALL BE ACCORDING TO GA. STD. SPECIFICATIONS.
3. SECTIONS SHOWN ARE TYPICAL. CONTRACTOR SHALL FURNISH FABRICATOR WITH ACTUAL SIZES, ALIGNMENTS, ELEVATIONS, HEIGHTS, FLOW LINES, ANGLES, ETC., NECESSARY FOR EACH STRUCTURE.
4. MINIMUM LENGTH OF STUBS FROM BASE RISER SHALL BE SUFFICIENT TO ALLOW CONNECTION TO DRAIN PIPE, ½ LENGTH OF CONNECTING BAND + 2" TYPICAL.
5. C.M. BASE RISER SHALL BE OF SUFFICIENT HEIGHT TO GIVE A 9" MIN. ABOVE TOP OF HIGHEST STUB. UNITS BEHIND CURB (FOR CATCH BASIN) SHALL BE 14 GAUGE MIN. OR SAME GAUGE AS OUTLET PIPE, WHICHEVER IS THICKER. UNITS IN FRONT OF CURB (FOR DROP INLET) SHALL BE 12 GAUGE MIN. OR SAME GAUGE AS OUTLET PIPE, WHICHEVER IS THICKER. UNITS MAY BE 16 GAUGE IF ONLY PIPE IS SLOPE DRAIN FROM CATCH BASIN.
6. SEE SEPARATE PLANS FOR CATCH BASIN OR DROP INLET DETAILS.
7. D_1 = INSIDE DIAMETER OF BASE RISER
   D_1' = INSIDE DIAMETER OF OUTLET PIPE
   MINIMUM D_1 SHALL BE 30", UNLESS APPROVED OTHERWISE
8. CIRCULAR CONCRETE UNITS (STD. 1040) OR BOX TYPE BASES (FROM CATCH BASIN OR DROP INLET STANDARD) MAY BE ALLOWED AS ALTERNATES UNLESS SPECIFIED OTHERWISE. ALTERNATE C.M. FABRICATED DESIGNS PERMITTED IF APPROVED BY D.O.T. PRIOR TO INSTALLATION.
9. PAYMENT FOR CATCH BASIN OR DROP INLET SHALL INCLUDE THE CORRUGATED METAL BASE RISER TO STRUCTURE BOTTOM COLLAR, LADDER, CONCRETE BOTTOM IF REQ'D, PLUS ALL OTHER ITEMS NORMALLY INCLUDED FOR STRUCTURE. PAYMENT FOR LIN. FT. OF STORM DRAIN PIPE SHALL INCLUDE LATERALS TO AND CONNECTIONS TO STUBS FROM BASE RISER.
10. LATERAL CONNECTION TO RISER OR MAIN C.M. PIPE CULVERT MAY BE MADE WITH MIN. 16 GAUGE C.M. SADDLE PLATES BOLTED AT THE REQUIRED LOCATIONS IN ACCORDANCE WITH STANDARD INDUSTRY PRACTICE. DIRECTIONAL CHANGE IN LATERALS MAY BE ACCOMPLISHED WITH C.M. ELBOW SECTIONS.

SPECIAL NOTE:
THESE DETAILS ARE FOR USE ONLY WHERE CORRUGATED METAL PIPE IS ALLOWED FOR STORM DRAIN. THE FABRICATED UNITS SHALL BE OF THE SAME MATERIALS AS ADJOINING STORM DRAIN PIPES. THE FOLLOWING SOIL OR WATER CONDITIONS, IF PRESENT, WILL DISALLOW THE USE OF C.M. FABRICATED UNITS:
CONDUCTANCE > 100 MICROMHOS
60 MICROMHOS ≤ CONDUCTANCE < 100 MICROMHOS & TOTAL HARDNESS 60
4.0 > pH > 8.5 FOR ALUMINUM
6.0 > pH FOR STEEL

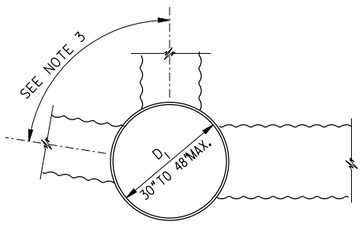

SECTION X-X

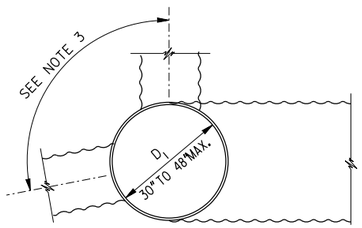

SECTION Y-Y

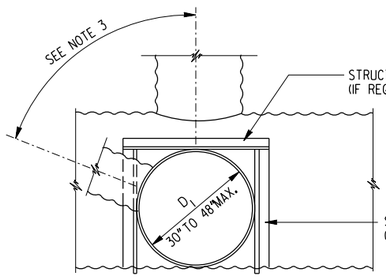

SECTION Z-Z

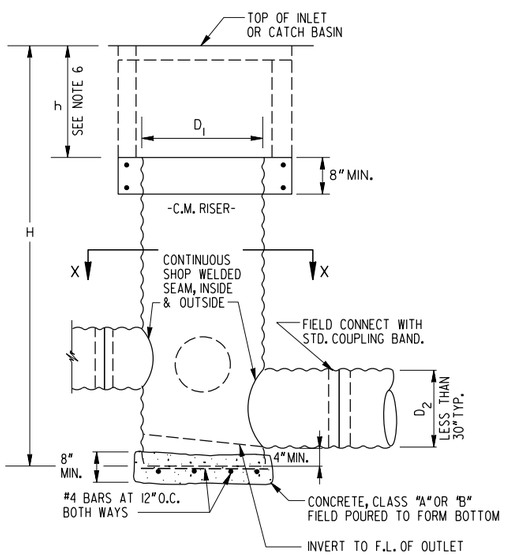

SECTIONAL DETAIL
$D_2 < D_1$

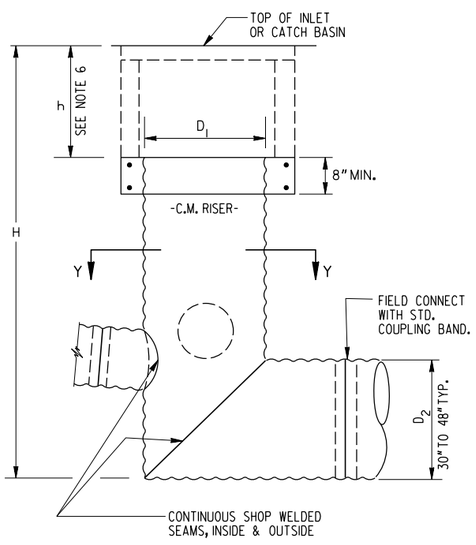

SECTIONAL DETAIL
$D_2 = D_1$

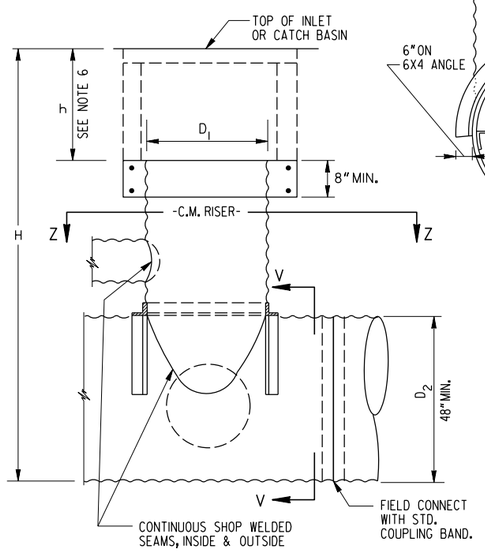

SECTIONAL DETAIL
$D_2 > D_1$

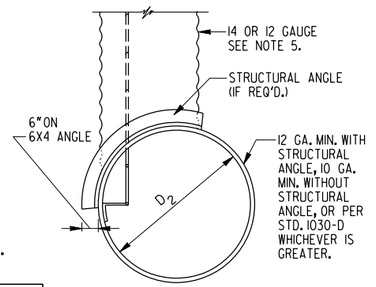

SEC. V-V

D_2	STRUCTURAL ANGLE SIZE
48" - 66"	NOT REQ'D.
72" - 96"	4 x 4 x ¼
102" - 120"	6 x 4 x ¼

DEPARTMENT OF TRANSPORTATION
STATE OF GEORGIA

CONSTRUCTION DETAIL

CIRCULAR CORRUGATED METAL BASES

FOR CATCH BASINS & DROP INLETS

DATE | REVISION | BY

DECEMBER 1983
NOT TO SCALE

NUMBER D-28

GDOT Georgia Department of Transportation | P. I. No. XXXXXXX

LONGITUDINAL EDGEDRAIN WITH LATERALS.

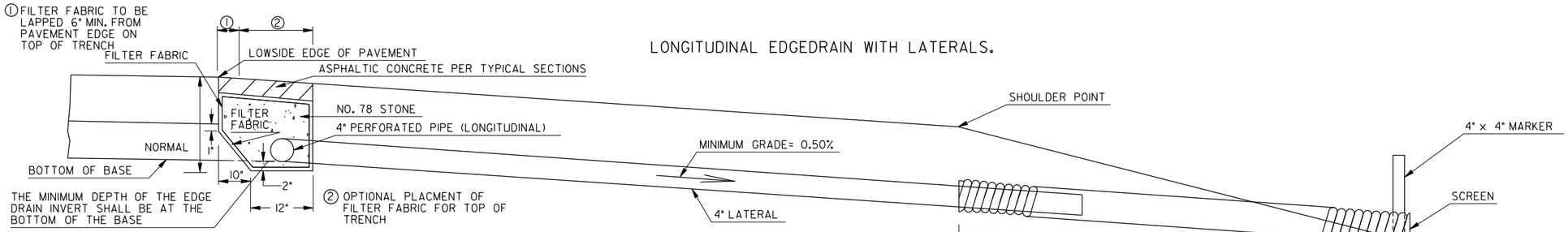

⓪ LENGTH	
RATE OF SLOPE	REQUIRED LENGTH OF CORRUGATED METAL PIPE FOR OUTLET
4:1 OR FLATTER	10'-0" MIN.
3:1	6'-8" MIN.
2:1	5'-0" MIN.

DETAIL OF ALTERNATIVE OUTLET FOR LATERAL

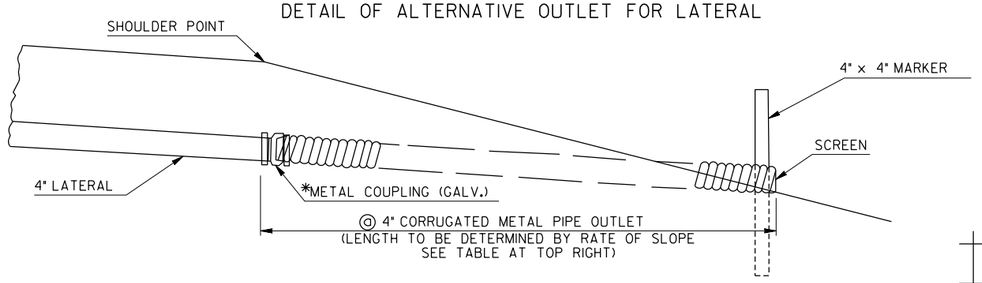

*ALTERNATE CONNECTION:
STANDARD PLASTIC FITTING MEETING REQUIREMENTS OF SPECIAL PROVISION SEC. 839.04 OF GA. STD. SPECIFICATIONS MAY BE USED INSTEAD OF METAL COUPLING.

DETAIL FOR SCREEN

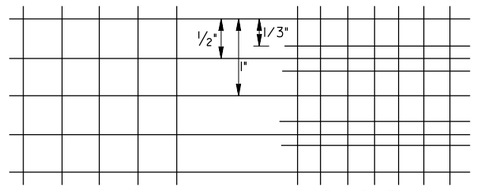

SCREEN TO BE GALVANIZED. HARDWARE (WIRE) CLOTH 2 x 2 OR 3 x 3 MESH MIN. 21 GAUGE

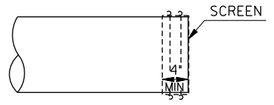

SCREEN TO BE PLACED OVER THE END OF PIPE AS SHOWN & SECURED FIRMLY IN PLACE BY WRAPPING GALVANIZED WIRE AROUND PIPE & SCREEN. OTHER METHODS FOR SECURING SCREEN FIRMLY OVER END OF PIPE MAY BE USED, IF APPROVED BY THE ENGINEER.

LATERAL CONNECTIONS

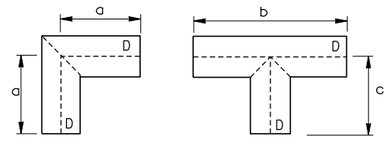

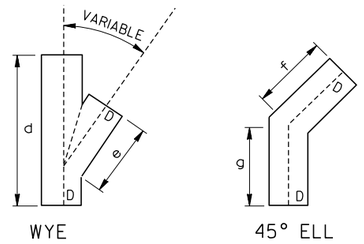

THE DIMENSIONS (a THRU g) SHOWN ABOVE FOR THE VARIOUS KINDS & SIZES OF PERFORATED PIPE SHALL BE IN AGREEMENT WITH THE MANUFACTURER'S STANDARD PRACTICES.

DETAIL FOR LOCATION OF EDGEDRAIN & LATERAL.

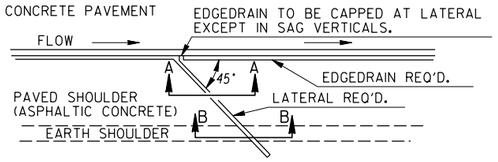

NOTE: WHERE EDGE OF PAVEMENT IS ON 0.0% GRADE, THE LATERAL MAY BE PLACED 90°

DETAIL OF TRENCH SECTIONS FOR LATERAL

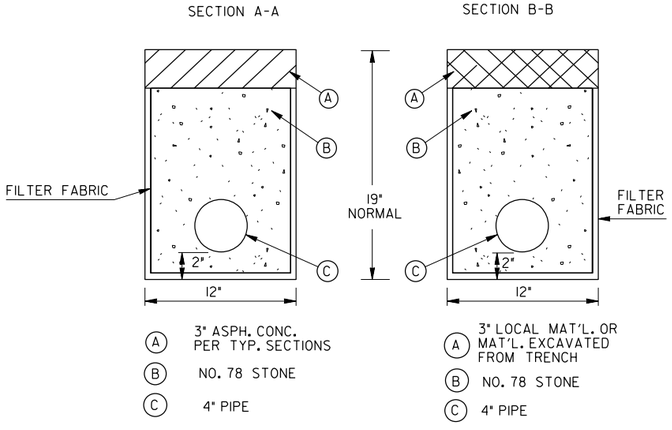

NOTE: NORMAL DEPTH OF TRENCH FOR LATERAL IS 19 INCHES. THE DEPTH OF THE TRENCH SHALL BE INCREASED, WHERE NECESSARY, TO PROVIDE AN OUTFALL GRADE OF 0.5% OR GREATER.

GENERAL NOTES:

1. TRENCH SHALL BE SHAPED WITH AS NEARLY VERTICAL SIDES AS ARE PRACTICAL & WITH A FLAT BOTTOM. NORMAL DEPTH OF EDGEDRAIN TRENCH IS 19 INCHES. WHERE EDGEDRAIN IS REQUIRED IN GORE AREAS, THE OUTFALL END WILL BE CONNECTED TO AN EXISTING DRAINAGE STRUCTURE, OR THE TRENCH DEPTH WILL BE INCREASED AS REQUIRED TO OBTAIN POSITIVE DRAINAGE REVERSING THE FLOW OPPOSITE THE EDGE OF PAVEMENT GRADE, IF NECESSARY.
2. PLAIN WHITE (NO REFLECTIVE SHEETING) FLEXIBLE DELINEATOR POSTS WILL BE REQUIRED AT ALL OUTLETS EXITING ON SLOPES, EXCEPT WHERE TERMINATED ON CONC. DITCH PAVING, IN DROP INLETS, ETC. POSTS WILL BE 2 FT± IN THE GROUND PLACED AS DIRECTED BY THE ENGINEER, SO AS TO BE MOST VISIBLE TO MOWERS. PAYMENT FOR UNDERDRAIN WILL INCLUDE THE DELINEATORS.
3. EDGEDRAIN PIPE SHALL BE INSTALLED ADJACENT TO THE PAVEMENT ON THE OUTSIDE SHOULDERS IN BOTH MAINLINE DIRECTIONS & ON THE INSIDE SHOULDER WHEN IT IS THE LOW SIDE OF A SUPERELEVATED CURVE, EDGEDRAIN PIPE SHALL BE PLACED ADJACENT TO THE OUTSIDE EDGE OF PAVEMENT ON RAMPS, AS INDICATED ON PLANS.
4. LATERALS ARE TO BE SPACED AT INTERVALS OF 400 FEET MAXIMUM AT LOCATIONS WHERE THE GRADE ALONG THE EDGE OF PAVEMENT IS GREATER THAN 0.25 PERCENT & AT INTERVALS OF 250 FEET WHERE THE EDGE OF PAVEMENT GRADE IS 0.25 PERCENT OR LESS. THE SPACING OF LATERAL WILL BE ACCOMPLISHED REQUIRING A LATERAL AT THE LOW POINT OF EACH VERTICAL CURVE. LATERAL CONNECTIONS SHALL BE MADE WITH SUITABLE STANDARD FITTINGS (ELLS, WYES, OR TEES AS DETAILED).
5. DEAD ENDS OF PIPE SHALL BE CLOSED WITH METAL OR PLASTIC CAPS OR CONCRETE PLUGS.
6. OUTFALL ENDS OF PIPE SHALL BE EQUIPPED WITH SCREEN.
7. EDGEDRAIN IS NOT CONTINUOUS THRU LATERALS, EXCEPT IN SAG VERTICAL.
8. WASTE MATERIAL FROM EXCAVATION OF EDGEDRAIN TRENCH SHALL BE DISPOSED OF BY THE CONTRACTOR. THE CONTRACTOR SHALL BE RESPONSIBLE FOR OBTAINING THE NECESSARY DISPOSAL AREAS.
9. A NEAT LINE SHALL BE CUT IN THE SHOULDER PAVING PRIOR TO THE TRENCHING FOR THE LONGITUDINAL EDGEDRAIN. THE CUT MAY BE ACCOMPLISHED BY EITHER SAWING OR CUTTING.
10. ANY WORK NEEDED FOR REMOVING & REPLACING ASPHALTIC CURB, REMOVING & REPLACING GUARDRAIL, & ANY ADDITIONAL WORK NECESSARY FOR THE INSTALLATION OF EDGEDRAIN ON THIS DRAIN SHALL BE INCLUDED IN THE BID PRICE FOR EDGEDRAIN.
11. ASPHATIC CONCRETE INCLUDED IN BID PRICE FOR EDGEDRAIN.
12. NOTE: SEE PLANS FOR TYPICAL LOCATIONS.
13. THE FILTER FABRIC SHALL BE INCLUDED IN THE BID PRICE FOR EDGEDRAIN.

DEPARTMENT OF TRANSPORTATION
STATE OF GEORGIA

CONSTRUCTION DETAIL

LONGITUDINAL EDGEDRAINS

WITH LATERALS

DATE | REVISION | BY

SEPTEMBER 1978
NOT TO SCALE

NUMBER D-32

STATE	PROJECT NUMBER	SHEET NO.	TOTAL SHEETS
GA.			

CIRCULAR PRECAST ALTERNATE

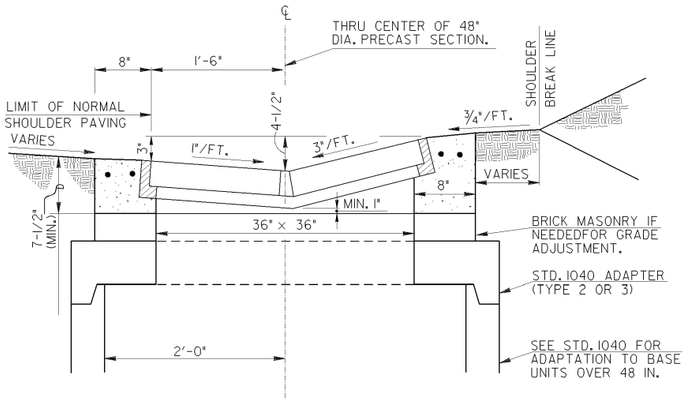

SPECIAL DESIGN "V" GUTTER DESIGN

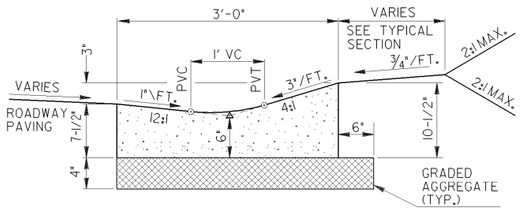

1. CONCRETE SHALL BE CLASS "A", OR PER SECTION 441.
2. BASIS OF PAVEMENT: CONCRETE "V" GUTTER PER LIN. FT.

FRAME

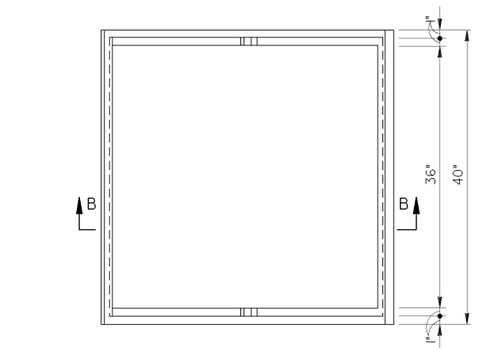

SECTION B-B

NOTE:
FRAME AND GRATE SHALL BE GRAY IRON DRAINAGE CASTINGS. SEE GEORGIA D.O.T. STANDARD SPECIFICATIONS 854.

GRATE

GRATE - 2 EACH REQUIRED

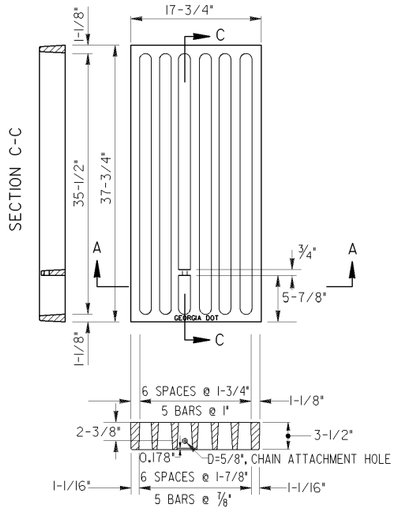

SECTION A-A

NOTE:
GRATE SHOWN ABOVE SHALL NOT BE USED WHERE BICYCLES ARE PERMITTED. SEE CONSTRUCTION DETAIL D-33B FOR BICYCLE GRATE.

SECURITY CHAIN

INSTALL SECURITY CHAIN ON BOTH GRATES
(SEE NOTE 8)

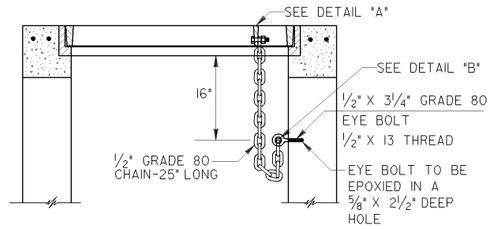

CHAIN CONNECTION DETAILS

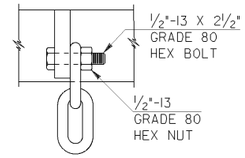

DETAIL "A"
BOLTED CONNECTION DETAIL

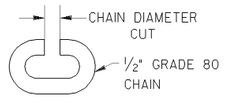

CUT CHAIN AND CONNECT CHAIN TO EYE BOLT AND THEN FIELD WELD TO FILL GAP.

DETAIL "B"
CUT CHAIN LINK DETAIL

STEPS

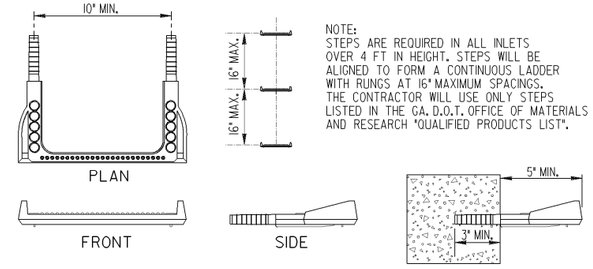

NOTE:
STEPS ARE REQUIRED IN ALL INLETS OVER 4 FT IN HEIGHT. STEPS WILL BE ALIGNED TO FORM A CONTINUOUS LADDER WITH RUNGS AT 16" MAXIMUM SPACINGS. THE CONTRACTOR WILL USE ONLY STEPS LISTED IN THE GA. D.O.T. OFFICE OF MATERIALS AND RESEARCH "QUALIFIED PRODUCTS LIST".

DEPRESSED INLET

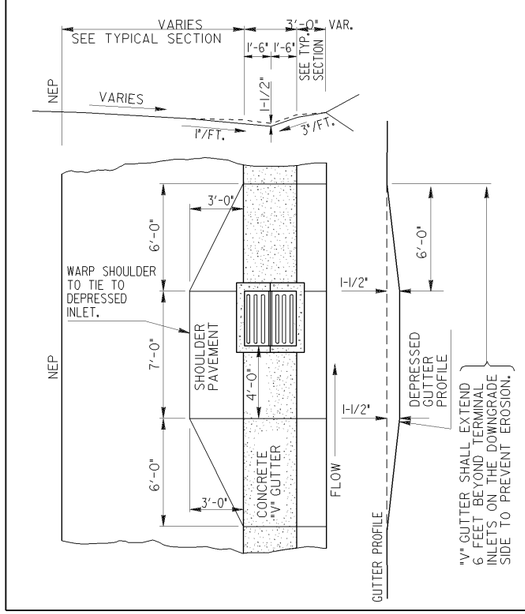

TYPE "V" INLET

(15" PIPE TO 30" TYP.)

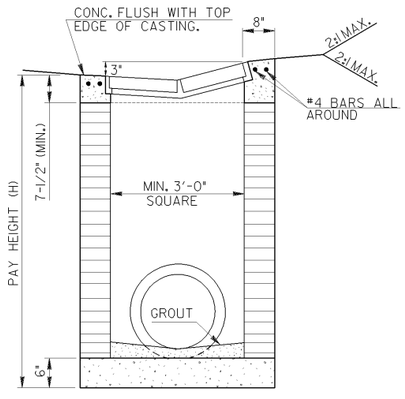

MIN. H FOR PIPES TO 30"	
PIPE SIZE	MIN. "H"
15"	3'-9"
18"	4'-2"
24"	4'-9"
30"	5'-4"

THICKNESS OF BRICK WALLS	
DEPTH	THICKNESS
0'-10'	8"
10'-20'	12"
OVER 20'	16"

TYPE "V" INLET

DETAIL FOR EXTRA WIDTH TYPE "V" INLETS WHERE REQUIRED TO ACCOMODATE PIPES LARGER THAN 30" (TYPICAL) OR SKEWED PIPES

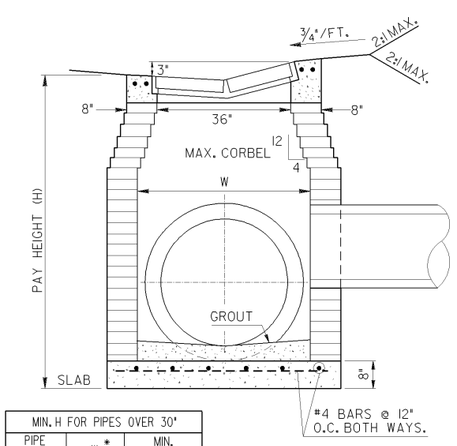

MIN. H FOR PIPES OVER 30"		
PIPE SIZE	W *	MIN. H
36"	4'-0"	6'-6"
42"	4'-8"	7'-8"
48"	5'-0"	8'-2"
54"	5'-6"	9'-9"
60"	6'-6"	11'-9"

* W TO BE INCREASED WHERE NECESSARY TO ACCOMODATE LARGER PIPES OR PIPES ON SKEWS WITH MINIMUM H INCREASED ACCORDINGLY.

GENERAL NOTES:

1. SEE SECTION 668. OF GEORGIA D.O.T. STANDARD SPECIFICATIONS FOR MATERIALS, CONSTRUCTION DETAILS, MEASUREMENTS, & PAYMENT FOR THIS STRUCTURE, EXCEPT AS NOTED.
2. ALL CONCRETE SHALL BE CLASS "A" FOR BUILT-IN-PLACE INLET CONSTRUCTION. CONCRETE FOR "V" GUTTER MAY BE EITHER CLASS "A" OR PER SECTION 441. THE COST OF THE "V" GUTTER WILL BE INCLUDED IN THE OVERALL BID PRICE FOR CONCRETE V GUTTER.
3. IF "V" GUTTER INLET SYSTEM IS TERMINATED IN SAG OR LOW AREA, AN EXTENSION OF THE GUTTER PAST LOWEST INLET OR OTHER APPROVED EROSION PROTECTION SHALL BE PROVIDED.
4. CONSTRUCTION ALTERNATES FOR INLETS SHALL BE:
   (A) BRICK MASONRY AS SHOWN;
   (B) CIRCULAR PRECAST (SEE TOP LEFT & STD. 1040.)
   (C) REINFORCED CONCRETE (SEE STD. 1019-A.)
5. MINIMUM INLET DIMENSIONS GIVEN IN THE TABLES ARE TYPICAL FOR CONCRETE PIPE AND MAY BE ADJUSTED WHERE SPECIFIED BY EITHER THE DESIGNER OR THE ENGINEER.
6. THE COST OF THE STEPS AND INSTALLATION OF CHAINS, EYE BOLTS, AND HEX BOLTS SHALL BE INCLUDED IN THE OVERALL BID PRICE FOR DROP INLET.
7. APPLY TACK-WELD BEHIND THE NUT, IF CHAIN IS SECURED TO INLET OR GRATE WITH BOLT AND NUT.
8. TYPE "V" INLET HAS TWO GRATES. EACH GRATE REQUIRES CHAIN AND EYE BOLT INSTALLED.

BY	REVISION	DATE
BJO	REV. CHAIN GRADE & DETAILS	8-16-13
	ADDED GEN. NOTES 7 & 8	4-4-11
GLO	ADDED SAFETY CHAIN DETAIL & REV. STEP DETAIL	
	REV. GEN. NOTE NO. 6	7-09-07
GLO	REV. GEN. NOTE NUMBER 2.	
	GENERAL REVISION	6-14-90

DEPARTMENT OF TRANSPORTATION
STATE OF GEORGIA

CONSTRUCTION DETAILS

TYPE "V" INLET "V" GUTTER DETAILS

NO SCALE

NUMBER D-33

GDOT Georgia Department of Transportation | P. I. No. XXXXXXX

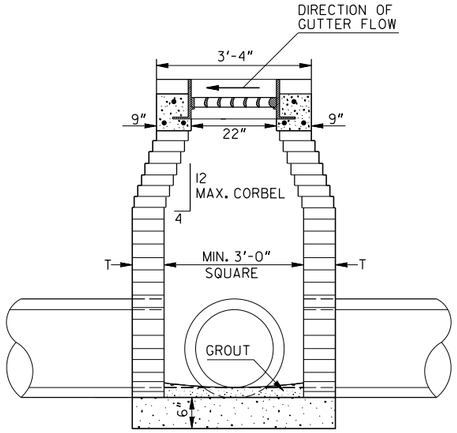

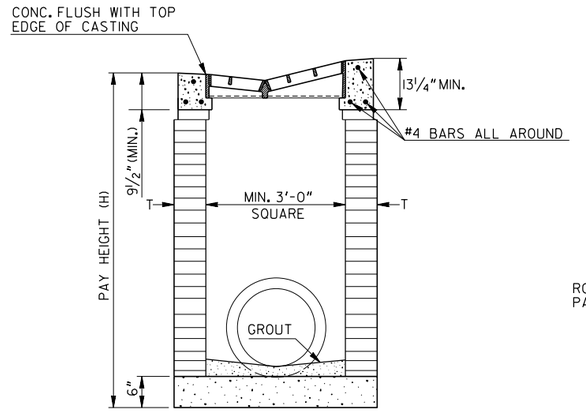

TYPE "V" INLET
(PIPE TO 30" TYP.)

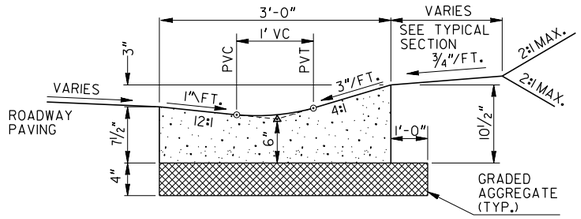

1. CONCRETE SHALL BE CLASS "A", OR PER SECTION 441.
2. BASIS OF PAVEMENT: CONCRETE "V" GUTTER PER LIN. FT.

SPECIAL DESIGN
"V" GUTTER DETAILS

NOTE: THE GRATES AND FRAMES FOR THE INLETS SHOWN SHALL BE ITEM R-3501-U, AS SHOWN ON PAGE 213 OF THE NEENAH FOUNDRY COMPANY CATALOG 15TH EDITION, OR EQUIVALENT.

MIN. H FOR PIPES TO 30"	
PIPE SIZE	MIN. H
15"	3'-9"
18"	4'-2"
24"	4'-9"
30"	5'-4"

SPECIAL NOTE:
THE GRATE SHOWN ON THESE DETAILS MAY BE USED WHERE BICYCLES ARE PERMITTED.

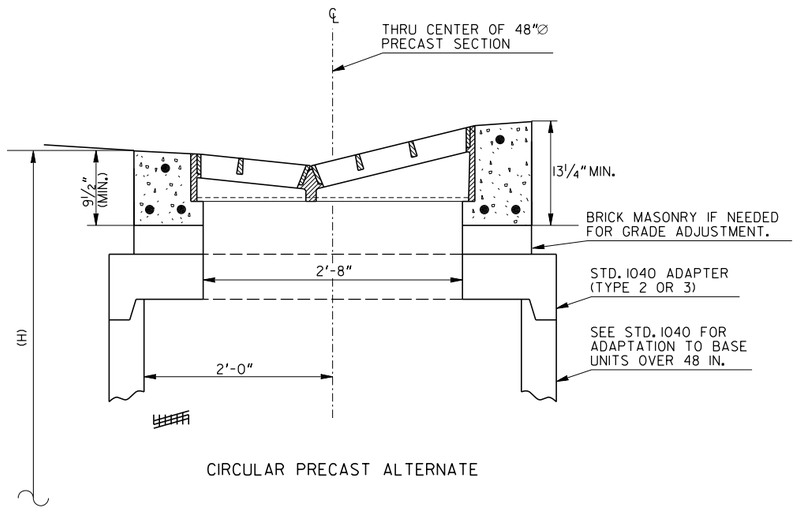

CIRCULAR PRECAST ALTERNATE

THICKNESS OF BRICK WALLS	
DEPTH	THICKNESS (T)
0'-10'	8"
10'-20'	12"
OVER 20'	16"

MIN. H FOR PIPES OVER 30"		
PIPE SIZE	W *	MIN. H
36"	4'-0"	6'-6"
42"	4'-8"	7'-8"
48"	5'-0"	8'-2"
54"	5'-6"	9'-9"
60"	6'-6"	11'-9"

* "W" TO BE INCREASED, WHERE NECESSARY, TO ACCOMMODATE LARGER PIPES OR PIPES ON SKEWS WITH MINIMUM "H" INCREASED ACCORDINGLY.

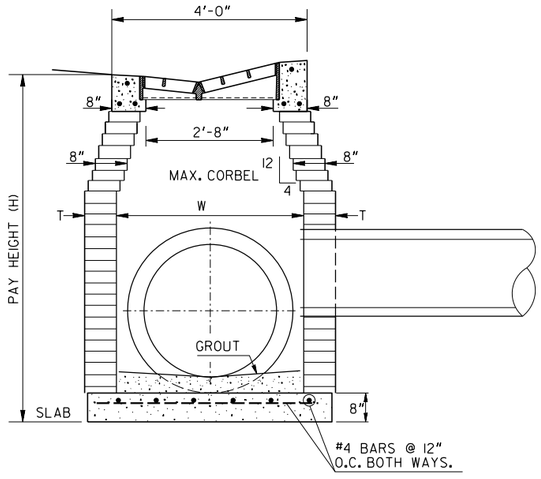

DETAIL FOR EXTRA WIDTH TYPE "V" INLETS, WHERE REQUIRED, TO ACCOMMODATE PIPES LARGER THAN 30" (TYPICAL) OR SKEWED PIPES

TYPE "V" INLET

NOTE:
ALL TYPE "V" INLETS WITH "H" OVER FOUR (4) FEET SHALL HAVE STEPS OR LADDER BARS. NUMBER, TYPE, AND LOCATION TO BE AS DIRECTED BY THE ENGINEER.

NOTES:

1. SEE SECTION 668. OF GEORGIA D.O.T. STANDARD SPECIFICATIONS FOR MATERIALS, CONSTRUCTION DETAILS, MEASUREMENTS, & PAYMENT FOR THIS STRUCTURE, EXCEPT AS NOTED.
2. ALL CONCRETE SHALL BE CLASS "A" FOR BUILT-IN-PLACE INLET CONSTRUCTION. CONCRETE FOR "V" GUTTER MAY BE EITHER CLASS "A" OR PER SECTION 441.
3. IF "V" GUTTER INLET SYSTEM IS TERMINATED IN SAG OR LOW AREA, AN EXTENSION OF THE GUTTER PAST LOWEST INLET OR OTHER APPROVED EROSION PROTECTION SHALL BE PROVIDED.
4. CONSTRUCTION ALTERNATES FOR INLETS SHALL BE:
   (A) BRICK MASONRY AS SHOWN;
   (B) CIRCULAR PRECAST (SEE BOTTOM LEFT & STD. 1040.)
   (C) REINFORCED CONCRETE (SEE STD. 1019-A.)
5. MINIMUM INLET DIMENSIONS GIVEN IN THE TABLES ARE TYPICAL FOR CONCRETE PIPE AND MAY BE ADJUSTED WHERE SPECIFIED BY EITHER THE DESIGNER OR THE ENGINEER.

BY	REVISION	DATE

DEPARTMENT OF TRANSPORTATION
STATE OF GEORGIA

CONSTRUCTION DETAIL

TYPE "V" INLET "V" GUTTER DETAILS

(WITH BICYCLE-SAFE GRATE)

JULY 1996
NOT TO SCALE

NUMBER
D-33B

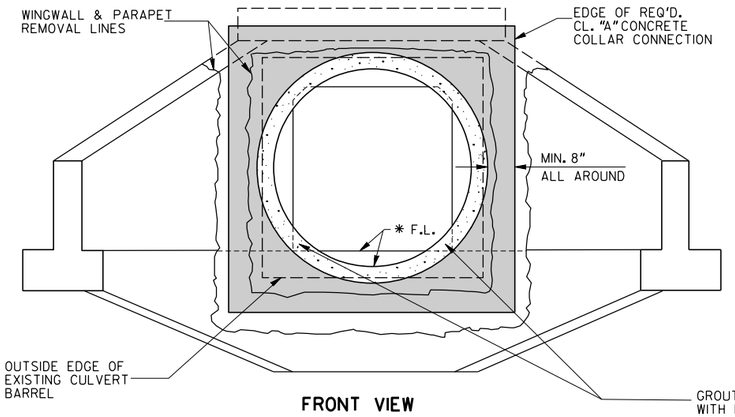

FRONT VIEW

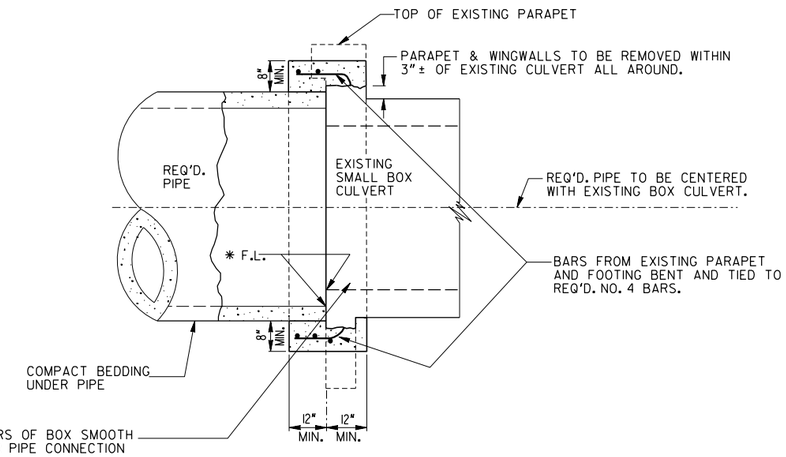

SECTION A-A

* FLOW LINES TO BE SHOWN IN THE PLANS. PIPE AND BOX CULVERT F.L. TO BE THE SAME FOR PIPE CONNECTION ON INLETS.

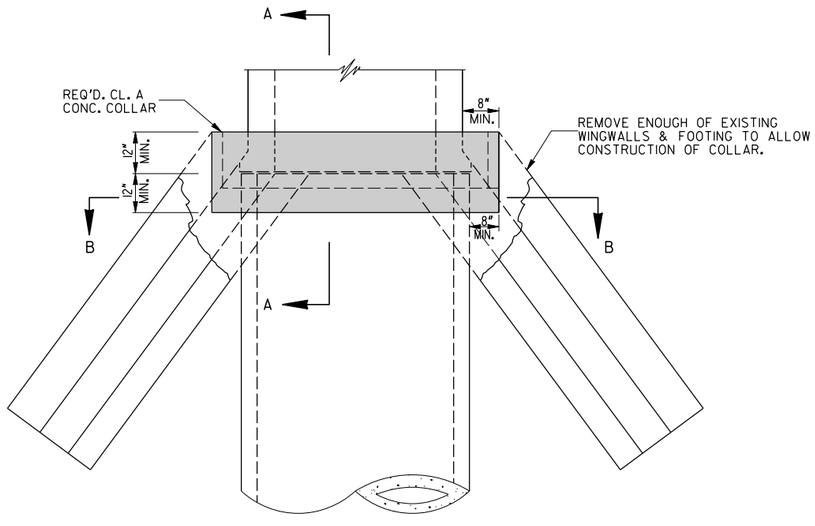

PLAN VIEW

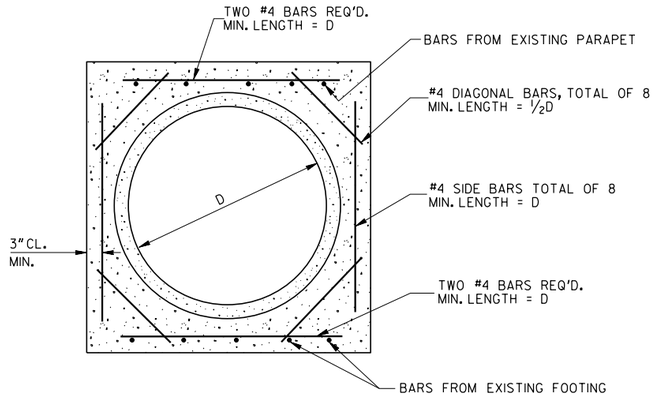

SECTION B-B

NOTE:
CROSS SECTION AREA OF COLLAR DOES NOT HAVE TO BE SQUARE OR RECTANGULAR; SHAPE MAY VARY SO LONG AS MINIMUM DIMENSIONS GIVEN IN OTHER VIEWS ARE MAINTAINED ALL AROUND. COLLAR MAY BE FORMED BY ANY FEASIBLE METHOD APPROVED BY THE ENGINEER.

NOTES:

1. PAYMENT FOR PIPE CULVERT SHALL INCLUDE REMOVING PORTIONS OF WINGWALLS & PARAPET AS SHOWN AND THE CONCRETE AND STEEL REQUIRED FOR COLLAR CONNECTION.
2. COLLAR DIMENSIONS SHOWN ARE MINIMUM. COLLAR MAY BE FORMED AGAINST COMPACTED OR UNDISTURBED SOIL OR AGAINST EDGES OF EXISTING STRUCTURE. EXTERIOR OF COLLAR DOES NOT HAVE TO BE SMOOTH LINES.
3. THESE DETAILS ARE FOR USE WHERE IT IS NOT FEASIBLE TO EXTEND BOX CULVERT WITH SAME. WHERE PLANS SHOW BOX CULVERT EXTENDED WITH PIPE, THE CONTRACTOR MAY ELECT TO EXTEND WITH PRECAST BOX OR CAST-IN-PLACE BOX OF SAME SIZE WHERE FILL HEIGHT PERMITS AND AT NO ADDITIONAL COST TO THE DEPARTMENT.
4. ADJUSTMENTS TO DETAILS SHOWN MAY BE MADE IN THE FIELD AT THE DIRECTION OF THE ENGINEER TO SUIT INDIVIDUAL SITE.

DEPARTMENT OF TRANSPORTATION
STATE OF GEORGIA

CONSTRUCTION DETAIL

PIPE-BOX CULVERT

COLLAR CONNECTIONS DETAILS

DATE | REVISION | BY

MARCH 1988
NOT TO SCALE

NUMBER
D-34

GDOT Georgia Department of Transportation | P. I. No.

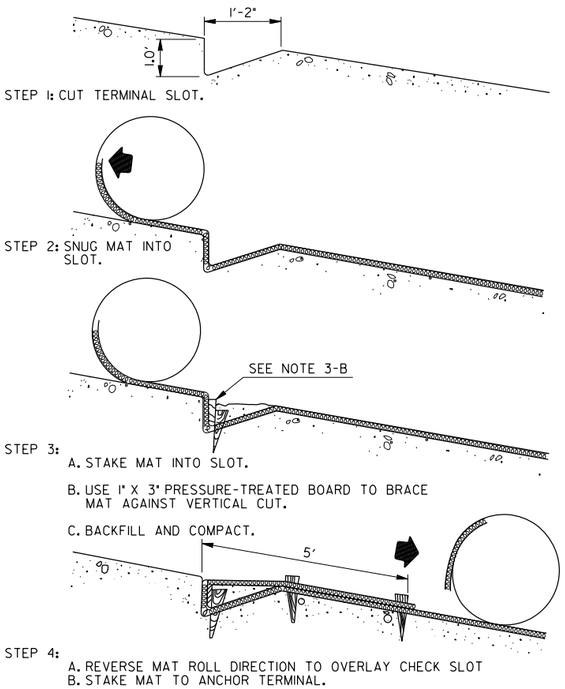

UPSTREAM TERMINAL

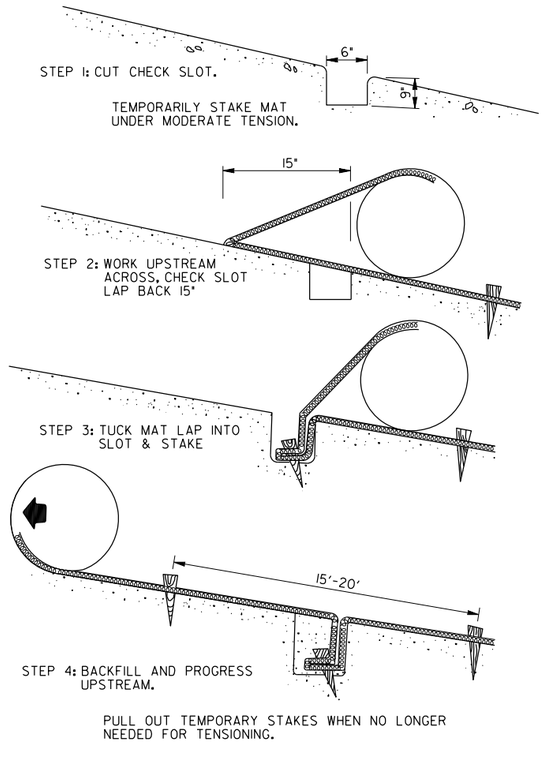

TRANSVERSE CHECK SLOT

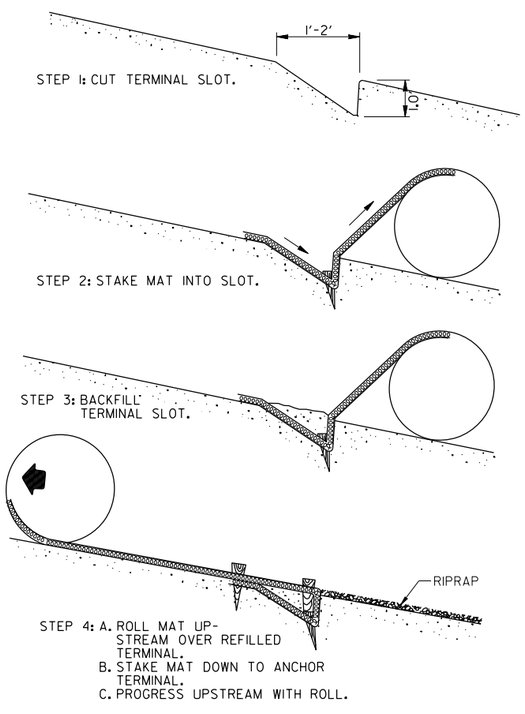

DOWNSTREAM TERMINAL

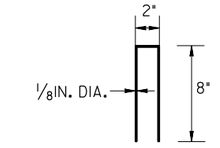

METAL MATTING - BLANKET STAPLE

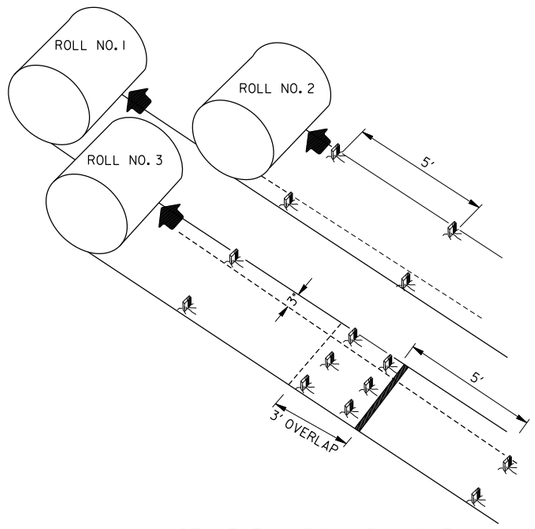

SEQUENTIAL ROLL RUN OUT IN CHANNELS

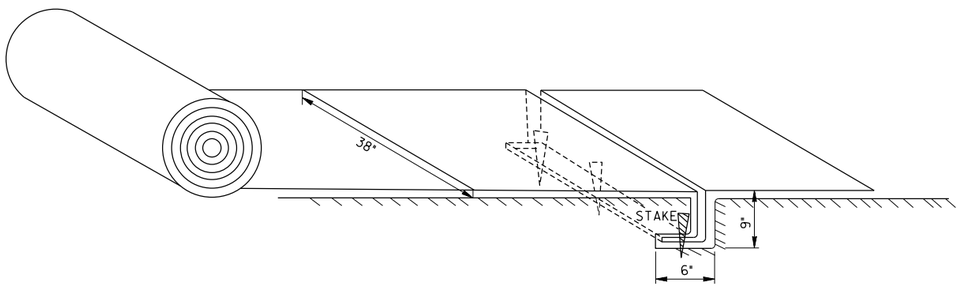

PICTORAL VIEW OF TRANSVERSE SLOT

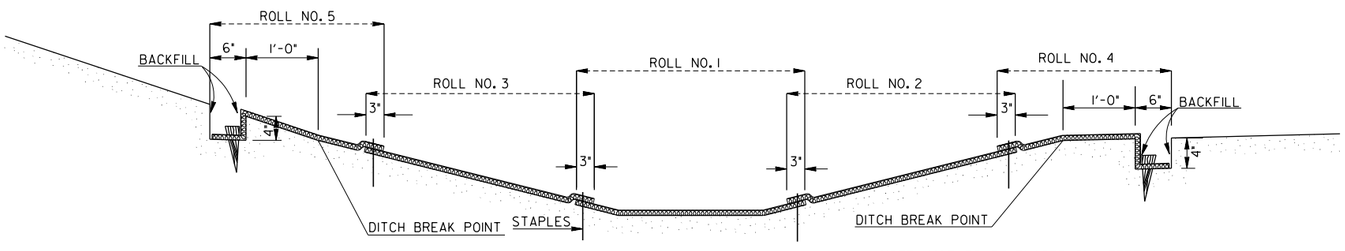

DITCH SECTION

NOTE: MAT TO BE PLACED ONE FEET ABOVE DITCH BREAK POINT OR ONE FOOT ABOVE THE 25 YEAR STORM.

GENERAL NOTES

1. INSTALLATION TO BE DONE AS PER MANUFACTURER'S RECOMMENDATIONS.
2. START AT DOWNSTREAM TERMINAL AND PROGRESS UPSTREAM.
3. FIRST ROLL IS CENTERED LONGITUDINALLY IN MID CHANNEL AND PINNED WITH TEMPORARY STAKES TO MAINTAIN ALIGNMENT.
4. SUBSEQUENT ROLLS FOLLOW IN STAGGERED SEQUENCE BEHIND FIRST ROLL. USE CENTER ROLL FOR ALIGNMENT TO CHANNEL CENTER.
5. WORK OUTWARDS FROM CHANNEL CENTER TO EDGE.
6. USE 3" OVERLAP AND STAKE AT 5' INTERVAL ALONG SEAMS.
7. USE 3' OVERLAPS AND SHINGLE DOWNSTREAM TO CONNECT LINING AT ROLL ENDS.
8. METAL STAPLES MAY BE USED IN LIEU OF WOODEN STAKES.

BY	REVISION	DATE
PN	ADDED 56-____ DRWG. NO.	07-01-26
TPC	REVISED SHEET LAYOUT & ADDED DITCH SECTION. ADDED METAL STAPLE	01-19-11

DEPARTMENT OF TRANSPORTATION
STATE OF GEORGIA

CONSTRUCTION DETAIL D-35

PAVEMENT SOIL REINFORCING MAT (TURF REINFORCING MATS)

INSTALLATION ON DITCHES

AUGUST 1988
NOT TO SCALE

NUMBER 56-

GDOT Georgia Department of Transportation | P. I. No. XXXXXXX

MODIFIED TYPE M-1 DROP INLET & JUNCTION BOX

NOTE: F.L. OF LONGITUDINAL PIPE MUST BE AT LEAST 5'-0" BELOW PAVEMENT SURFACE

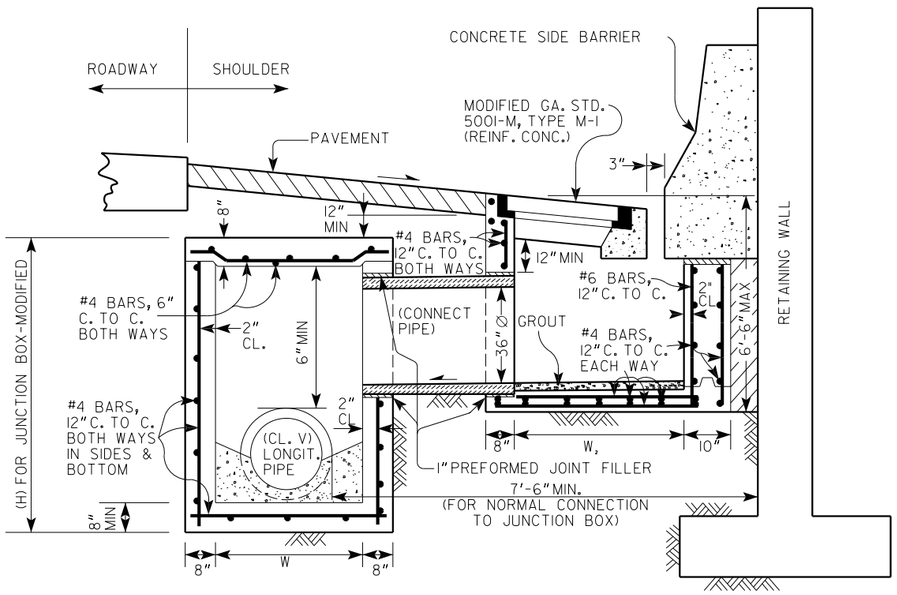

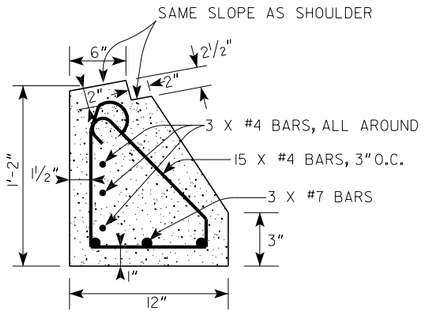

OPTION: BEAM MAY BE PRECAST

DROP INLET:
W_1=4'-3" MIN. FOR NORMAL CONNECTION
W_1=4'-6" MIN. FOR SKEWED CONNECTION
W_1=3'-0" MIN. (STD 5001-M)

JUNCTION BOX DIMENSIONS MODIFIED FOR CONNECTION TO MOD. TYPE M-1 INLET						
I.D. OF LONGIT. PIPE	NORMAL CONNECTION TO BACK OF JUNCTION BOX(LEFT)			SKEWED CONNECTION TO SIDE OF JUNCTION BOX(BELOW)		
	W	W_1	H	W	W_1	H
15"	3'-0"	4'-0"	5'-6"	4'-6"	3'-0"	7'-3"
18"	3'-0"	4'-0"	5'-6"	4'-6"	3'-0"	7'-10"
24"	3'-0"	4'-0"	5'-6"	4'-6"	3'-0"	8'-6"
30"	3'-5"	4'-0"	5'-6"	4'-6"	3'-0"	9'-1"
36"	4'-0"	4'-0"	5'-6"	4'-6"	3'-0"	9'-8"
42"	4'-7"	4'-0"	6'-1"	4'-7"	3'-0"	10'-3"
48"	5'-2"	4'-0"	6'-9"	5'-2"	3'-0"	10'-10"

MODIFIED TYPE M-3 DROP INLET

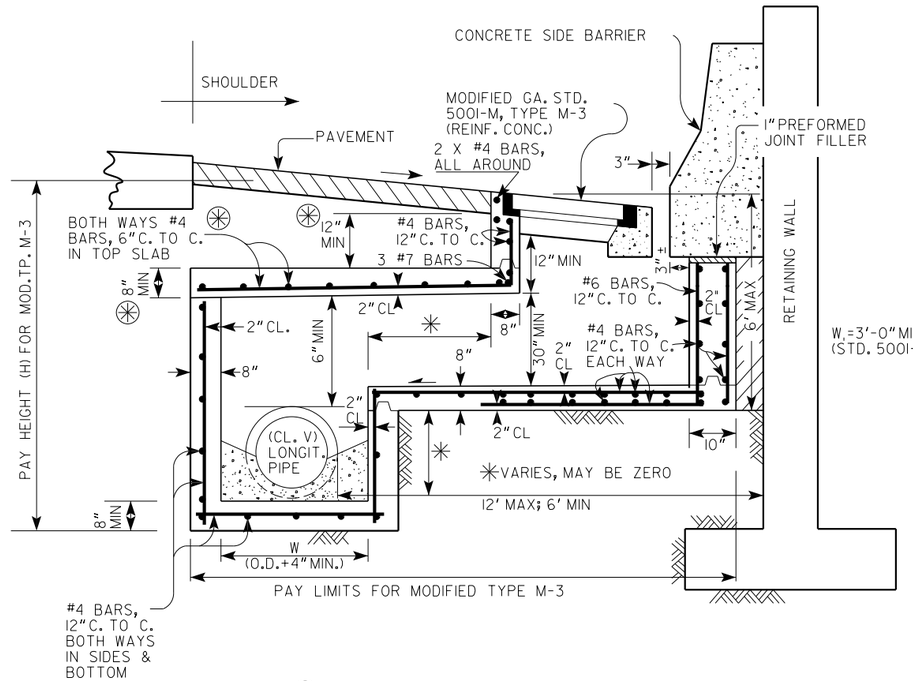

12" COVER MAY BE REDUCED TO ZERO BY INCREASING TOP SLAB TO 10" THICK WITH #8 BARS @ 6" C. TO C. BOTH WAYS

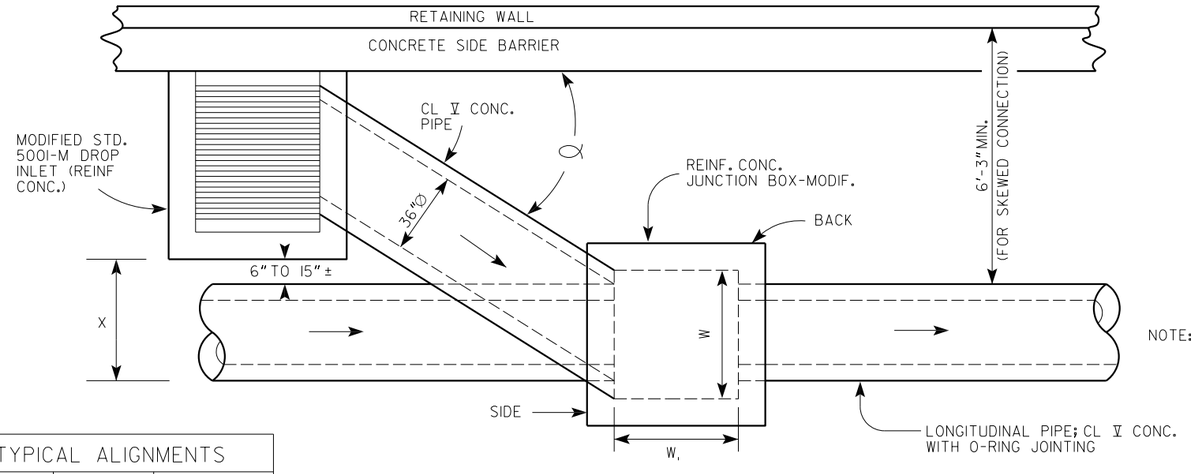

NOTE: CENTER OF LONGITUDINAL PIPE MAY BE OFFSET FROM CENTER OF JUNCTION BOX

TYPICAL ALIGNMENTS		
X	Ø (DEG. ±)	LENGTH 36" CONN.
TO 2'-6"	20	12' MIN.
TO 3'-6"	30	12' MIN.
TO 5'-0"	30	16' MIN.

PLAN VIEW WITH SKEWED CONNECTION

NOTE: TOP OF LONGITUDINAL PIPE MUST BE AT LEAST 6'-3" BELOW PAVING SURFACE TO USE SKEWED CONNECTION SHOWN HERE.

SPECIAL NOTE:

STANDARD 5001-M INLET GRATES ARE FOR USE ONLY ON LIMITED ACCESS TYPE FACILITIES. USE OTHER DETAILS (STD. 1019B TYP.) WHERE BICYCLES ARE PERMITTED.

PAY ITEMS:

668-5020	JUNCTION BOX, MODIFIED	____ EACH
668-2231	DROP INLET, GP. 1, MODIFIED TP. M-1	____ EACH
668-2233	DROP INLET, GP. 1, MODIFIED TP. M-3	____ EACH

NOTE: 36" CONNECTOR PIPE SHALL BE PAID FOR AS LIN.FT. OF STORM DRAIN PIPE.

GENERAL NOTES:

1. SPECIFICATIONS: GEORGIA STANDARD, CURRENT EDITION & SUPPLEMENTS THERETO.
2. GRATE & FRAME OR OTHER INLET DETAILS NOT SHOWN SHALL BE ACCORDING TO GA. STD. NO. 5001-M.
3. CONCRETE PIPE ON EITHER SIDE OF RETAINING WALL SHALL BE CLASS V FOR ANY DEPTH. JOINTS BETWEEN CONCRETE PIPE SECTIONS ON EITHER SIDE SHALL BE O-RING. PIPE EXTENDING THRU OR UNDER WALL WILL REQUIRE SPECIAL ENCASEMENT PER SEPARATE PLAN DETAILS.
4. LONGITUDINAL PIPE SHALL BE OFFSET FROM WALL AS FAR AS FEASIBLE.

DEPARTMENT OF TRANSPORTATION
STATE OF GEORGIA

CONSTRUCTION DETAIL

MODFIED STD. 5001-M DROP INLETS TYPES M-1 & M-3

(FOR USE IN FRONT OF R.E. WALLS)

DATE | REVISION | BY

JANUARY 1989

NOT TO SCALE

NUMBER D-36

GDOT Georgia Department of Transportation | P. I. No.

TEMPORARY DIVERSION CHANNEL PLASTIC LINING

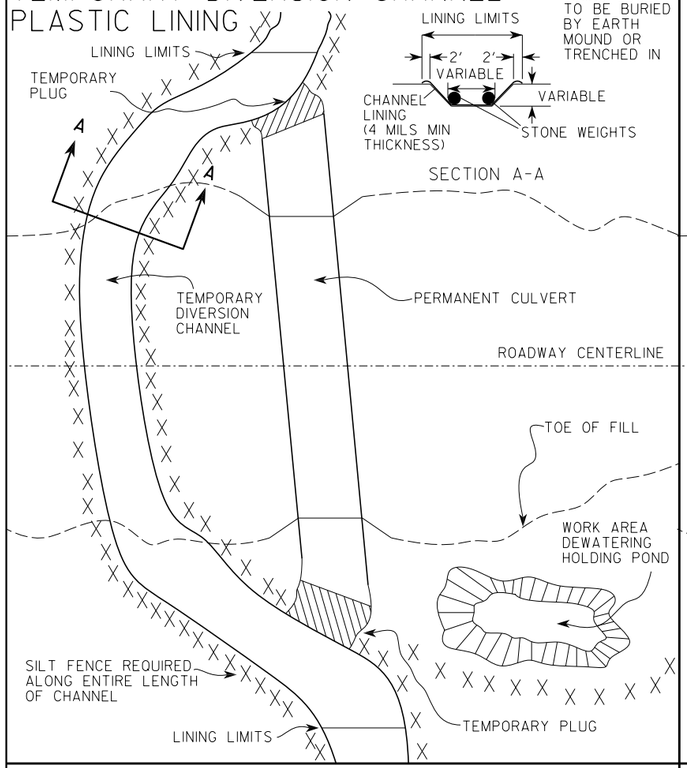

LINING EDGES TO BE BURIED BY EARTH MOUND OR TRENCHED IN

SECTION A-A

CULVERT CONSTRUCTED OUTSIDE EXISTING STREAM

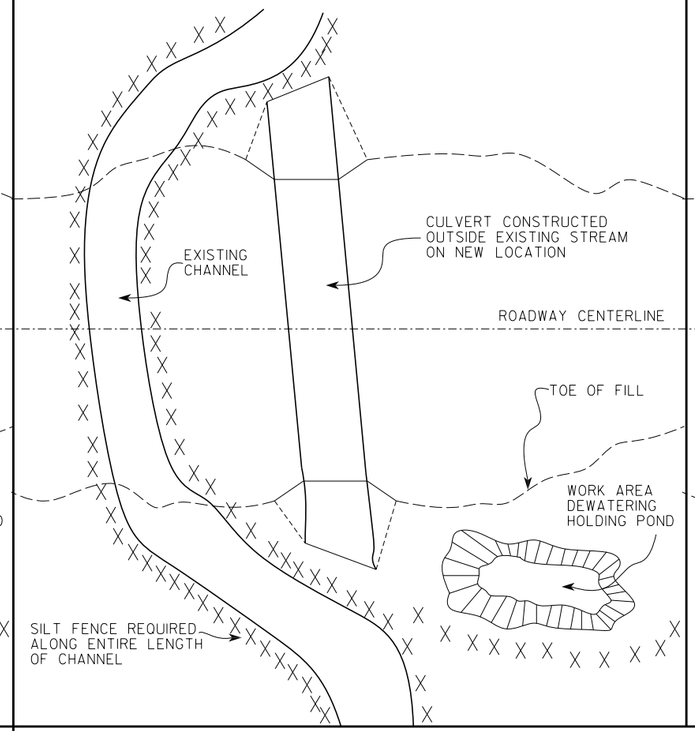

TEMPORARY CULVERT FOR STREAM DIVERSION

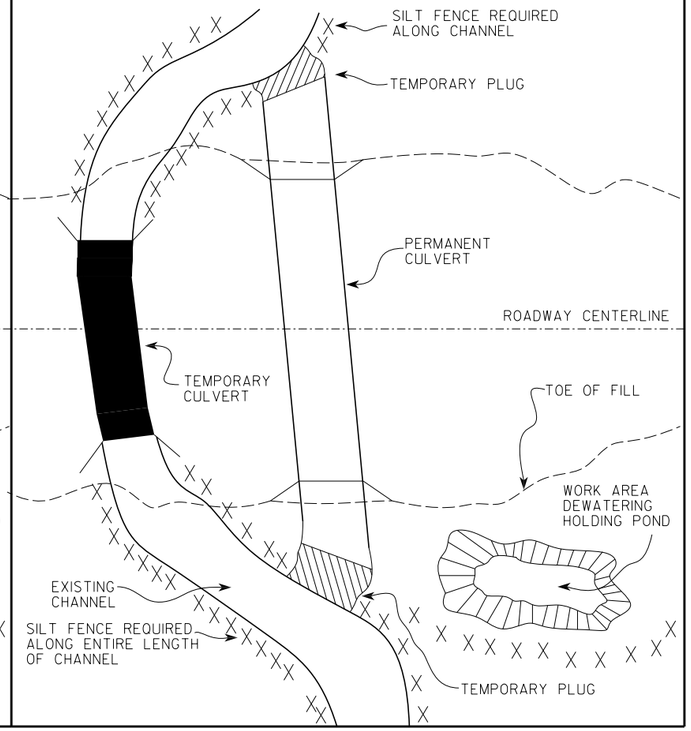

PIPE OR BOX CULVERT EXTENSION

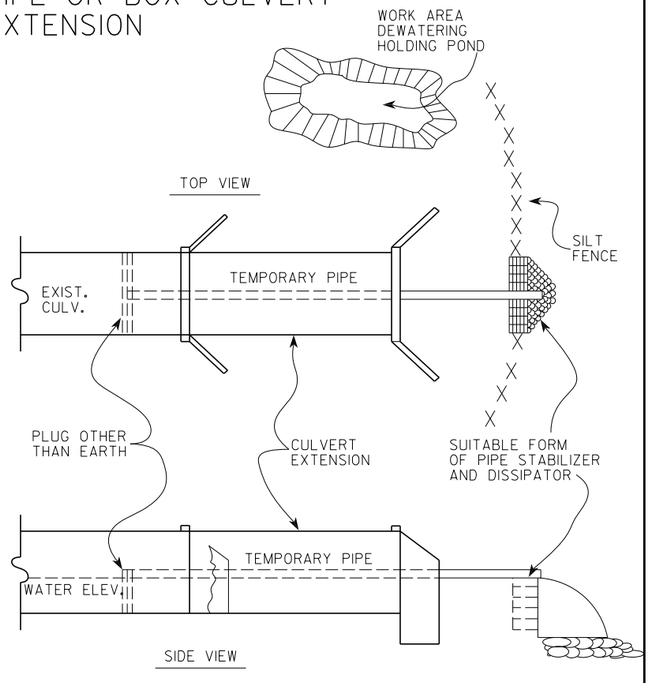

1. THESE DETAILS ARE NOT CONSTRUCTION DRAWINGS. THEY ARE ROUGH SKETCHES OF IDEAS. ALTERNATES MAY BE SUBMITTED BY THE CONTRACTOR IN THE EROSION CONTROL PLAN.
2. DIVERSION CHANNELS TO BE INCLUDED IN THE COST OF CULVERT. WHEN REQUIRED.
3. THE PLASTIC LINING SHALL BE PVC OR PE MATERIAL WITH A MINIMUM THICKNESS OF 6 MILS.
4. THE LAP OF THE SHEETS OF PLASTIC LINING SHALL BE A MINIMUM OF 2 FEET.
5. THE DIVERSION CHANNEL SHOULD BE THE SAME WIDTH AND DEPTH AS THE EXISTING CHANNEL.

BY	REVISION	DATE
PN	ADDED 56-____ DRWG. NO.	07-01-26
M.W.		06-28-93
M.W.		05-14-93
M.W.		10-23-92

DEPARTMENT OF TRANSPORTATION
STATE OF GEORGIA

CONSTRUCTION DETAIL
D-38
EXAMPLES OF DIVERSION CHANNELS

JUNE 1989
NOT TO SCALE

NUMBER 56-

STATE	PROJECT NUMBER	SHEET NO.	TOTAL SHEETS
GA.			

PLUGS FOR PIPE CULVERTS

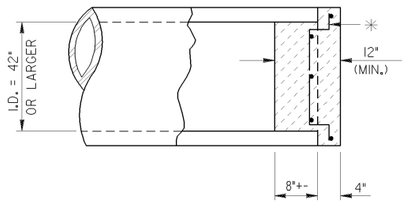

SECTION
(FOR PIPE I.D. 42" TO 72")

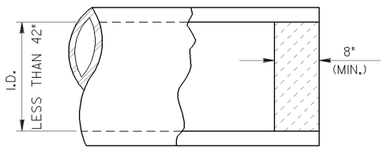

SECTION
(FOR PIPE I.D. TO 36")

(NOM. - MIN.) DIAMETER (In.)	CU. YARDS CL."A" CONCRETE (INCL. REINF.) *
42"	0.41
48"	0.53
54"	0.67
60"	0.83
66"	1.00
62"	1.19

* REINFORCING SHALL BE SIMILAR TO THAT SHOWN FOR BOX CULVERTS AT RIGHT.

(NOM. - MIN.) DIAMETER (In.)	CU. YARDS CL."A" OR CL."B" CONCRETE **
12"	0.02
15"	0.03
18"	0.04
24"	0.08
30"	0.12
36"	0.18

** BRICK MASONRY OR RUBBLE MASONRY (MIN. 8" THICK) MAY BE SUBSTITUTED FOR NON-REINFORCED CONCRETE WITH NO CHANGE IN PAYMENT.

PLUGS FOR BOX CULVERTS

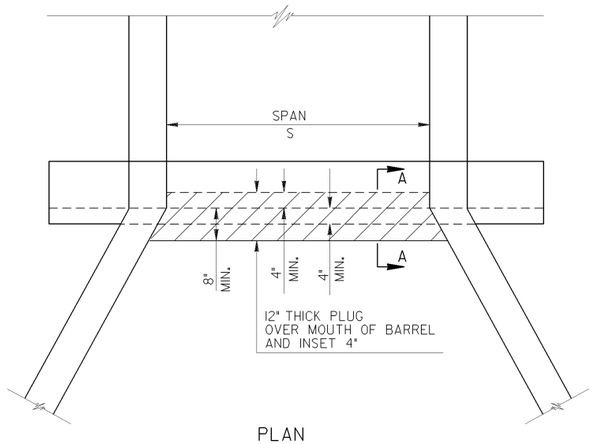

PLAN

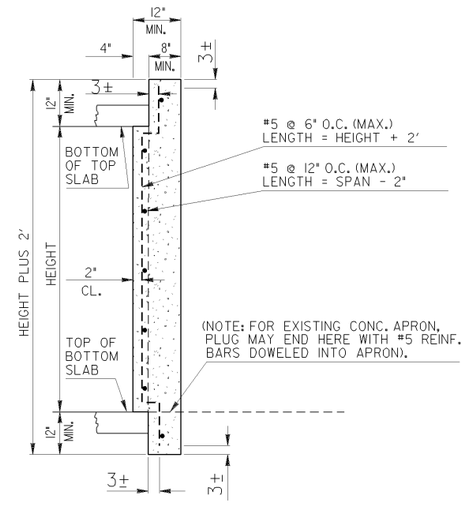

SECTION A-A

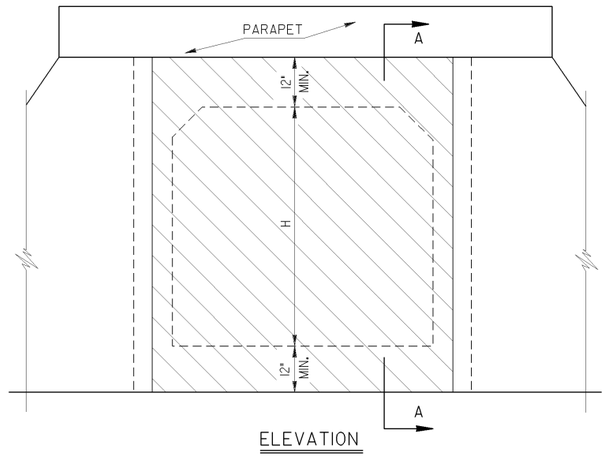

ELEVATION

PAY ITEM: CU. YARDS CL. "A" CONC. INCL. REINF. STEEL.

CU. YARDS = (H + 2') (S) (1')

DATE	DEPARTMENT OF TRANSPORTATION STATE OF GEORGIA		
REVISION	CONSTRUCTION DETAILS CULVERT PLUGS MARCH 17, 2008		
BY			NUMBER D-40

GDOT Georgia Department of Transportation | P. I. No.

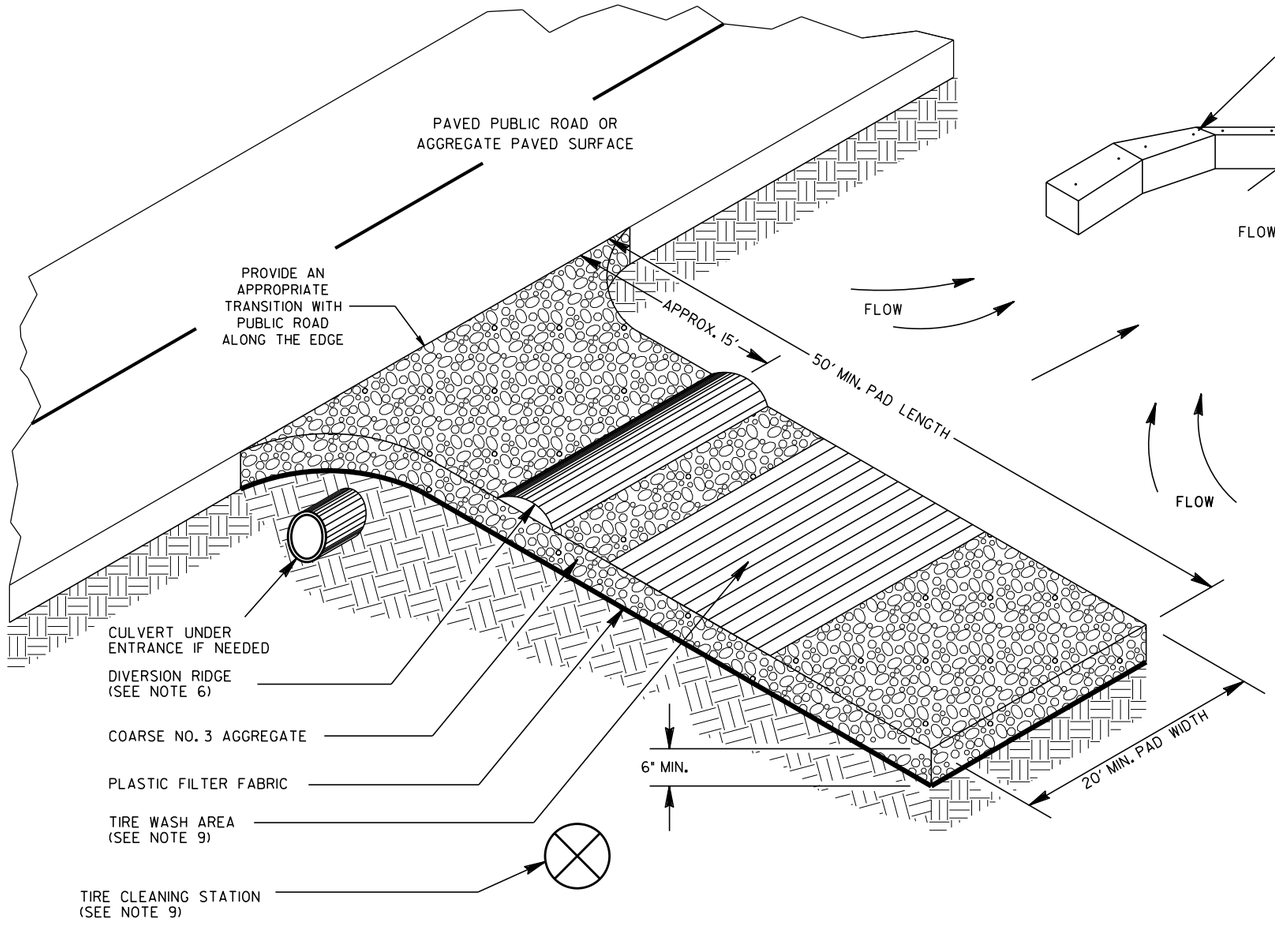

ENTRANCE ELEVATION

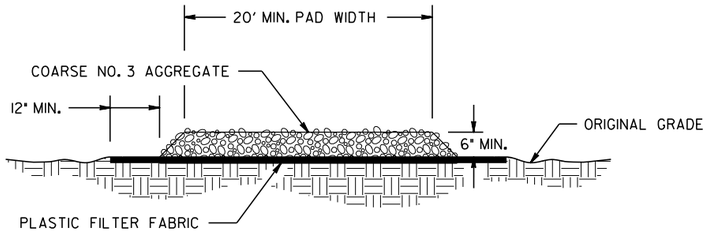

GENERAL NOTES:

1. AVOID LOCATING CONSTRUCTION EXITS ON STEEP SLOPES OR AT SHARP CURVES ON PUBLIC ROADS. CONSTRUCTION EXITS ARE NOT REQUIRED FOR DIRT PUBLIC ROADS.
2. REMOVE ALL VEGETATION AND OTHER UNSUITABLE MATERIAL FROM THE FOUNDATION AREA AND GRADE FOR POSITIVE DRAINAGE.
3. AGGREGATE SIZE SHALL BE COARSE NO. 3 AGGREGATE WITH 0.0% PASSING THE 1.06 INCH U.S. STANDARD SIEVE.
4. GRAVEL PAD SHALL HAVE A MINIMUM THICKNESS OF 6 INCHES AND PLACED ON APPROVED PLASTIC FILTER FABRIC.
5. GRAVEL PAD WIDTH SHALL BE EQUAL FULL WIDTH AT ALL POINTS OF VEHICULAR EGRESS, BUT NO LESS THAN 20'.
6. PROVIDE A TRAVERSABLE DIVERSION RIDGE CONSTRUCTED OF AGGREGATE 6 INCHES TO 8 INCHES HIGH WHEN GRADE TOWARD PAVED AREA IS GREATER THAN 2%.
7. INSTALL CULVERT UNDER THE ENTRANCE IF NEEDED TO MAINTAIN DRAINAGE DITCHES.
8. TIRE WASH AREA INCLUDES SEDIMENT TRAP OR OTHER ACCEPTABLE SEDIMENT STORAGE DEVICE AND SHALL BE CONSTRUCTED EVEN IF CONSTRUCTION EXIT TIRE CLEANING STATION IS NOT USED.
9. IF THE ACTION OF THE VEHICLE TRAVELING OVER THE GRAVEL PAD DOES NOT SUFFICIENTLY REMOVE THE MUD PRIOR TO ENTERING PUBLIC ROADS THUS DICTATING ADDITIONAL TIRE CLEANING MEASURES, THE CONTRACTOR SHALL ADD A CONSTRUCTION EXIT TIRE CLEANING STATION TO AN EXISTING CONSTRUCTION EXIT OR WHEN DIRECTED BY THE ENGINEER. THE CONSTRUCTION EXIT TIRE CLEANING STATION INCLUDES: WATER SOURCE, LABOR AND ALL MATERIALS NECESSARY TO PERFORM TASK. THIS WILL BE PAID FOR AS SHOWN IN SECTION 163.

   THE WASHING SHALL BE DONE ON AN AREA STABILIZED WITH AGGREGATE THAT DRAINS INTO A SEDIMENT TRAP OR OTHER ACCEPTABLE SEDIMENT STORAGE DEVICE. DIVERT ALL SURFACE RUNOFF AND DRAINAGE FROM THE CONSTRUCTION EXIT TO THE SEDIMENT CONTROL DEVICE. ACCEPTABLE SEDIMENT STORAGE DEVICE EXAMPLES INCLUDE TEMPORARY SEDIMENT TRAPS, HAY BALES OR STONE FILTER RING WITH THE SEDIMENT STORAGE SIZED FOR 67 CUBIC YARDS PER ACRE OF DRAINAGE. TIRE WASHING SHALL BE DONE MANUALLY OR BY EQUIPMENT SUITABLE FOR TRUCK TRAFFIC THAT REMOVES MUD AND DIRT.
10. AGGREGATE SHALL BE KEPT LOOSE OR SCARIFIED WHEN AGGREGATE BECOMES CONSOLIDATED.
11. CONSTRUCTION EXIT SHALL BE MAINTAINED IN A CONDITION THAT PREVENTS TRACKING AND/OR FLOW OF MUD ONTO PUBLIC RIGHTS-OF-WAYS. THIS MAY REQUIRE TOP DRESSING, REPAIR, AND/OR CLEAN OUT OF ANY MEASURES USED TO TRAP SEDIMENT. MAINTENANCE OF CONSTRUCTION EXIT MAY BE PAID WITH OR WITHOUT THE MAINTENANCE OF CONSTRUCTION EXIT TIRE WASH AREA. WHEN DIRECTED BY THE ENGINEER. ALL MUD AND DEBRIS SPILLED, DROPPED, WASHED, OR TRACKED FROM VEHICLES OR SITE ONTO ROADWAYS OR INTO STORM DRAINS MUST BE REMOVED IMMEDIATELY.

SEE SECTION 163 FOR THE CONSTRUCTION AND REMOVAL OF CONSTRUCTION EXITS. SEE SECTION 165 FOR THE MAINTENANCE OF CONSTRUCTION EXITS.

PAY ITEM:		
163-0301	CONSTRUCT AND REMOVE CONSTRUCTION EXITS	(EA)
165-0101	MAINTENANCE OF CONSTRUCTION EXIT	(EA)
165-0310	MAINTENANCE OF CONSTRUCTION EXIT TIRE WASH AREA	(EA)
PAY ITEM:	**FOR FIELD USE ONLY ACCORDING TO SECTION 163**	
163-0310	CONSTRUCTION EXIT TIRE CLEANING STATION	(DAY)

BY	REVISION	DATE
PN	ADDED 56-____ DRWG. NO.	07-01-26
HAC	REV GEN NOTES # 8-11	11-04-20
	REV PAY ITEM DESCS/REFS	
DLE	REV. TIRE WASH & NOTES	04-18-18
DLE	REV. GSWCC 2016 MANUAL	04-22-16
TPC	REV. CONSTR. EXIT LABELS	01-19-11

DEPARTMENT OF TRANSPORTATION
STATE OF GEORGIA

CONSTRUCTION DETAIL
D-41
CONSTRUCTION EXIT

FEBRUARY 2001
NOT TO SCALE

NUMBER
56-

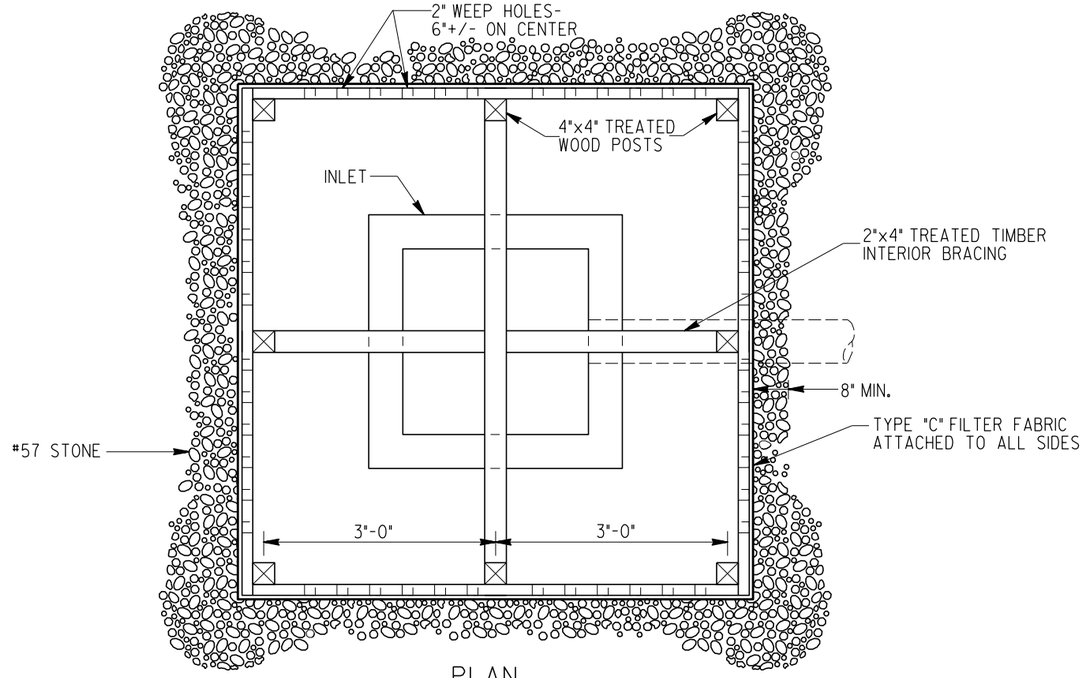

PLAN

NOTES:

BAFFLE BOX SHALL BE CONSTRUCTED OF 2"x4" TREATED TIMBER SPACED A MAXIMUM OF 1" APART OR OF PLYWOOD WITH WEEP HOLES 2" IN DIAMETER PLACED APPROXIMATELY 6" ON CENTER VERTICALLY AND HORIZONTALLY.

GRAVEL SHALL BE PLACED OUTSIDE THE BOX, ALL AROUND THE INLET, TO A DEPTH OF 2 TO 4 INCHES. THE ENTIRE BOX SHALL BE WRAPPED IN TYPE "C" FILTER FABRIC THAT SHALL BE ENTRENCHED 12 INCHES AND BACKFILLED.

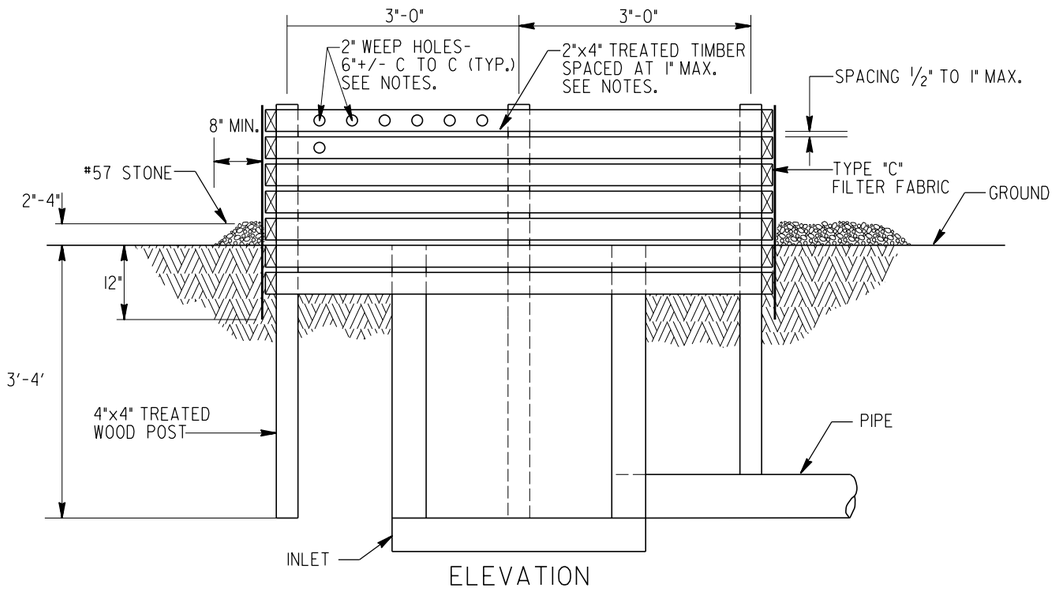

ELEVATION

BAFFLE BOX (Sd2-B)

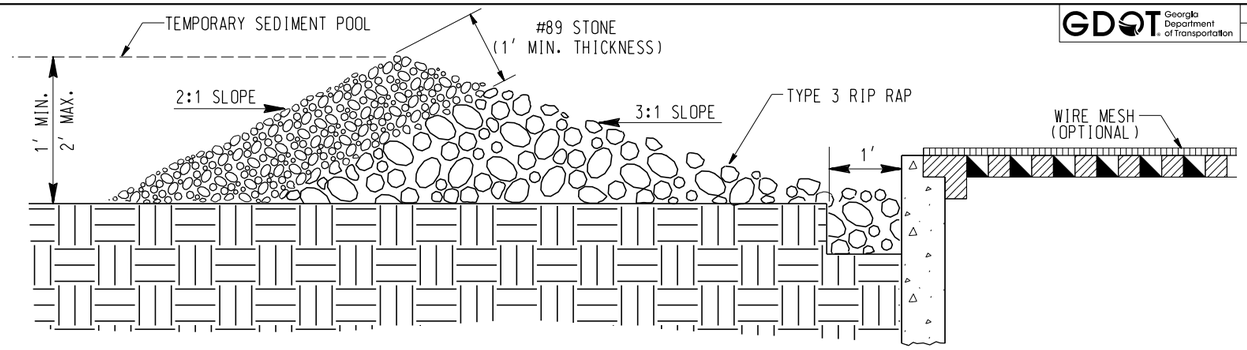

GRAVEL DROP INLET PROTECTION (GRAVEL DONUT) Sd2-G

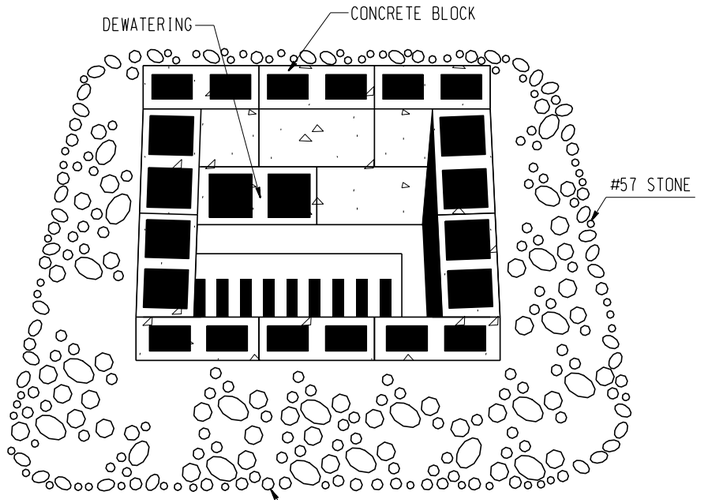

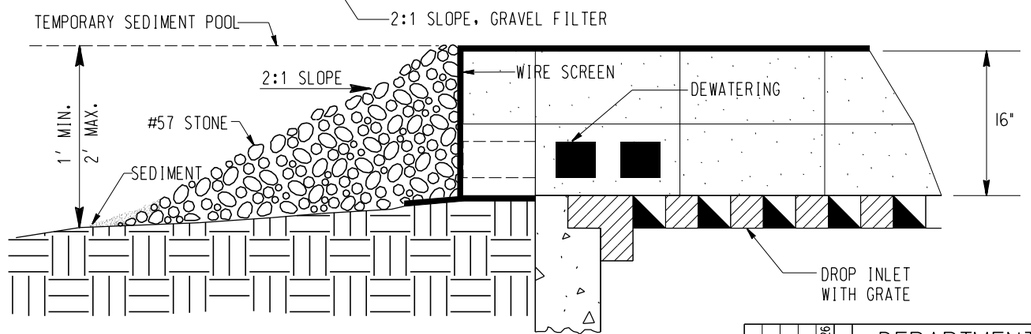

BLOCK & GRAVEL DROP INLET PROTECTION (Sd2-Bg)

BASIS OF PAYMENT:
CONSTRUCT AND REMOVE INLET SEDIMENT TRAP _____ EACH

GDOT Georgia Department of Transportation

P. I. No.

DEPARTMENT OF TRANSPORTATION
STATE OF GEORGIA

CONSTRUCTION DETAIL
D-42

INLET SEDIMENT TRAPS

BAFFLE BOX Sd2-B
BLOCK AND GRAVEL DROP INLET PROTECTION Sd2-Bg
GRAVEL DROP INLET PROTECTION Sd2-G

PN	BY	ADDED 56-_____ DRWG. NO. REVISION	07-01-26 DATE

MAY 2008
NOT TO SCALE

NUMBER
56-

GDOT Georgia Department of Transportation | P. I. No.

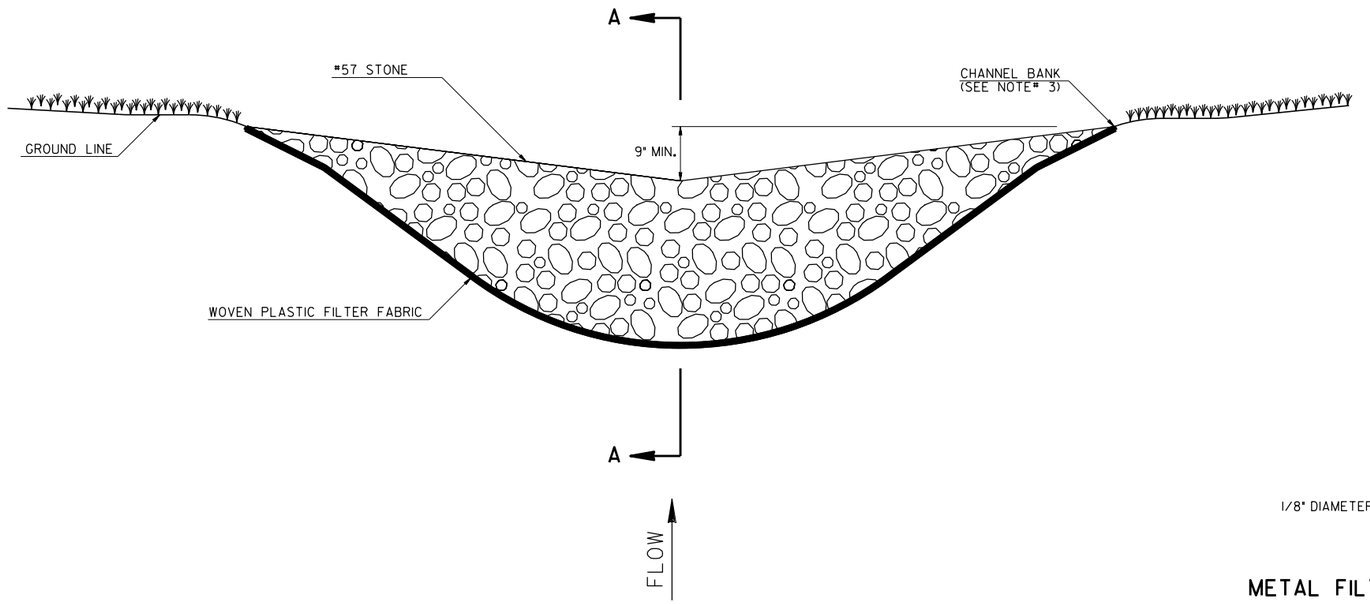

SECTION A-A

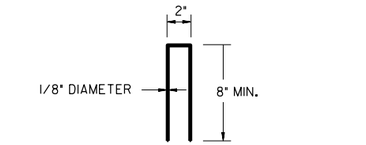

METAL FILTER FABRIC STAPLE

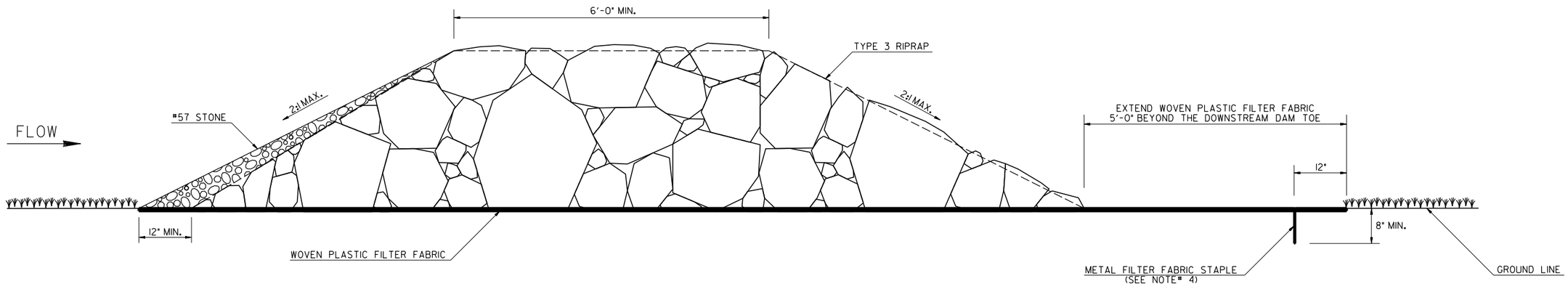

GENERAL NOTES:

1. THE MAXIMUM DRAINAGE AREA TO A ROCK FILTER DAM SHALL BE 50-ACRES.
2. ROCK FILTER DAMS SHALL NOT BE INSTALLED IN STATE WATERS.
3. THE ROCK FILTER DAM SHOULD NOT BE HIGHER THAN THE CHANNEL BANKS OR ADVERSELY IMPACT UPSTREAM PROPERTY OR STATE WATERS WITH BACKWATER. THE CENTER OF THE ROCK FILTER DAM SHOULD BE AT LEAST 9-INCHES LOWER THAN THE OUTER EDGES OF THE ROCK FILTER DAM AT THE CHANNEL BANKS.
4. ANCHOR THE WOVEN PLASTIC FILTER FABRIC TO THE GROUND SURFACE WITH METAL FILTER FABRIC STAPLES 12-INCHES FROM THE EDGE AND NO GREATER THAN 12-INCHES APART.
5. REMOVE SEDIMENT WHEN IT REACHES ONE-HALF THE HEIGHT OF THE ROCK FILTER DAM. WOVEN PLASTIC FILTER FABRIC SHALL BE REPLACED WHEN DAMAGED OR DETERIORATED.

PAY ITEMS:

163-0541	CONSTRUCT AND REMOVE ROCK FILTER DAM	(EA)
165-0110	MAINTENANCE OF ROCK FILTER DAM	(EA)

BY	REVISION	DRWG. NO.	DATE
PN	ADDED 56-		07-01-26

DEPARTMENT OF TRANSPORTATION
STATE OF GEORGIA

CONSTRUCTION DETAIL
D-43
ROCK FILTER DAM

APRIL 2016
NOT TO SCALE

NUMBER 56-

GDOT Georgia Department of Transportation | P. I. No.

ISOMETRIC VIEWS

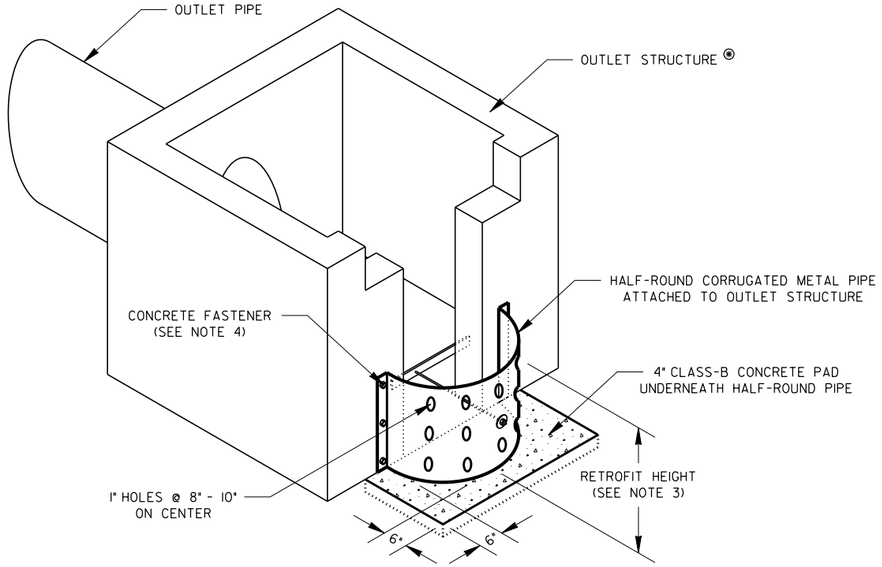

◉ A BOXED OUTLET STRUCTURE WITH A WEIR IS SHOWN. HOWEVER, THE OUTLET STRUCTURE WILL VARY AS DESIGNED FOR THE DETENTION POND. THE OUTLET STRUCTURE IS INDEPENDENT OF THE RETROFIT. SEE GENERAL NOTE 1 FOR ADDITIONAL REQUIREMENTS.

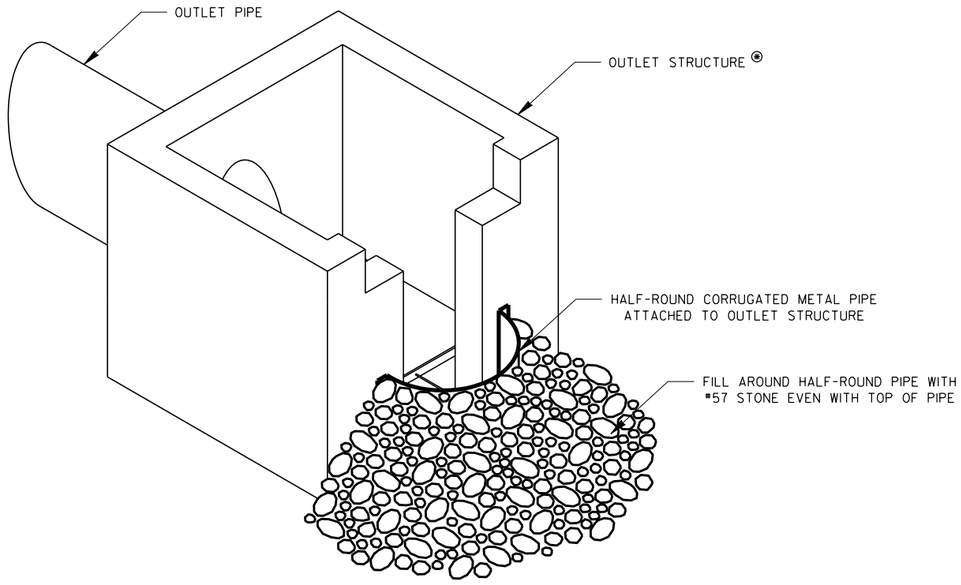

PLAN VIEW

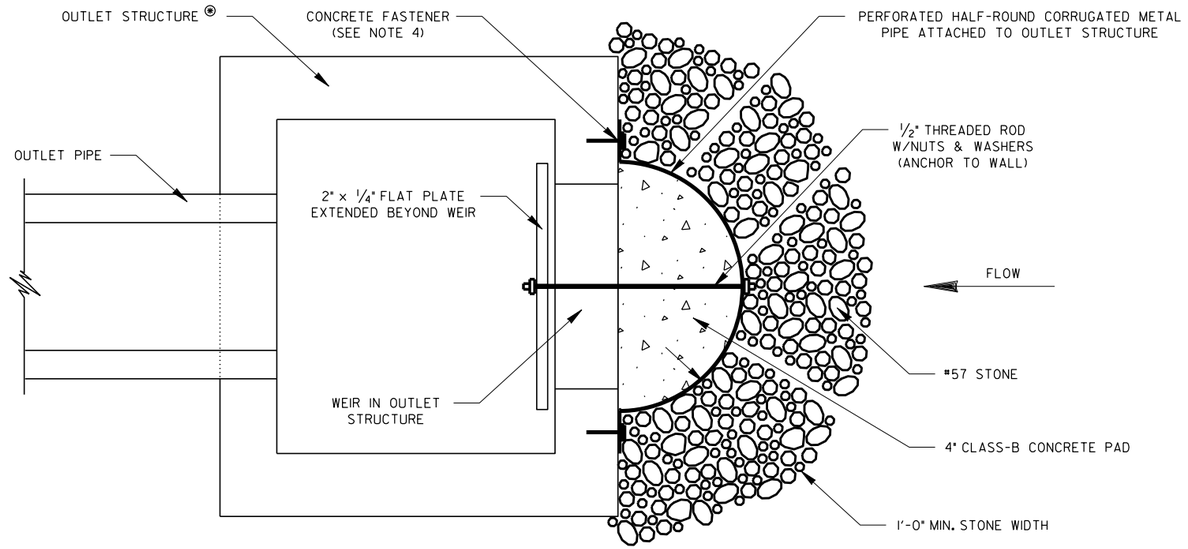

GENERAL NOTES:

1. PERFORATED HALF-ROUND PIPE WITH STONE FILTER MAY BE TEMPORARILY PLACED ON A DETENTION POND'S PERMANENT OUTLET STRUCTURE BUT SHALL NOT BE USED ON EXPOSED PIPE ENDS OR WINGED HEADWALLS. THE TOTAL DRAINAGE AREA TO THE DETENTION POND SHALL BE LESS THAN 30 ACRES.

2. THE DETENTION POND MUST BE CAPABLE OF TEMPORARILY STORING THE REQUIRED SEDIMENT STORAGE VOLUME IN ADDITION TO THE REQUIRED STORMWATER VOLUME.

   THE DETENTION POND SHALL BE LARGE ENOUGH TO TEMPORARILY STORE 67 CUBIC YARDS OF SEDIMENT PER ACRE OF DISTURBED AREA WITHIN IN THE CONTRIBUTING DRAINAGE AREA. THE REQUIRED SEDIMENT STORAGE VOLUME SHALL BE ACHIEVED BY EITHER EXCAVATING THE DETENTION POND OR RAISING THE OUTLET STRUCTURE'S INVERT. THE SEDIMENT STORAGE VOLUME ELEVATION SHALL BE MARKED ON THE OUTLET STRUCTURE OR BY SETTING A MARKED POST NEAR THE OUTLET STRUCTURE.

3. THE HEIGHT OF THE RETROFIT SHOULD BE APPROXIMATELY ONE-HALF THE HEIGHT OF THE OUTLET STRUCTURE. THE DIAMETER OF THE HALF-ROUND PIPE SHOULD BE 1.5 TIMES THE DIAMETER OF THE OF THE OUTLET PIPE OR WIDER THAN THE WEIR WITHIN THE OUTLET STRUCTURE.

4. ATTACH HALF-ROUND PIPE SECURELY TO OUTLET STRUCTURE USING 1/2" x 3" CORROSION-RESISTANT CONCRETE FASTENERS. REPAIR FASTENER HOLES WITH GROUT OR OTHER METHODS APPROVED BY THE ENGINEER AFTER THE RETROFIT IS REMOVED.

5. SEE STANDARD SPECIFICATION 163, AND SUPPLEMENTS THERETO FOR THE CONSTRUCTION AND REMOVAL OF RETROFITS. SEE STANDARD SPECIFICATION 165, AND SUPPLEMENTS THERETO FOR THE MAINTENANCE OF RETROFITS. SEDIMENT SHALL BE REMOVED WHEN ONE-THIRD OF THE SEDIMENT STORAGE CAPACITY, NOT THE TOTAL DETENTION POND CAPACITY, IS LOST TO SEDIMENT ACCUMULATION.

PAY ITEMS:
163-0540 CONSTRUCT & REMOVE RETROFIT, STA NO- (EA)
165-0095 MAINTENANCE OF RETROFIT, STA NO- (EA)

BY	REVISION	DATE
PN	ADDED 56-____ DRWG. NO.	07-01-26
DLE	DETAIL CLARIFICATIONS	07-05-18

DEPARTMENT OF TRANSPORTATION
STATE OF GEORGIA

CONSTRUCTION DETAIL D-44

RETROFITTING STRUCTURE FOR TEMPORARY SEDIMENT FILTER

PERFORATED HALF-ROUND PIPE WITH STONE FILTER

MAY 2008
NOT TO SCALE

NUMBER 56-

GDOT Georgia Department of Transportation | P. I. No.

ISOMETRIC VIEWS

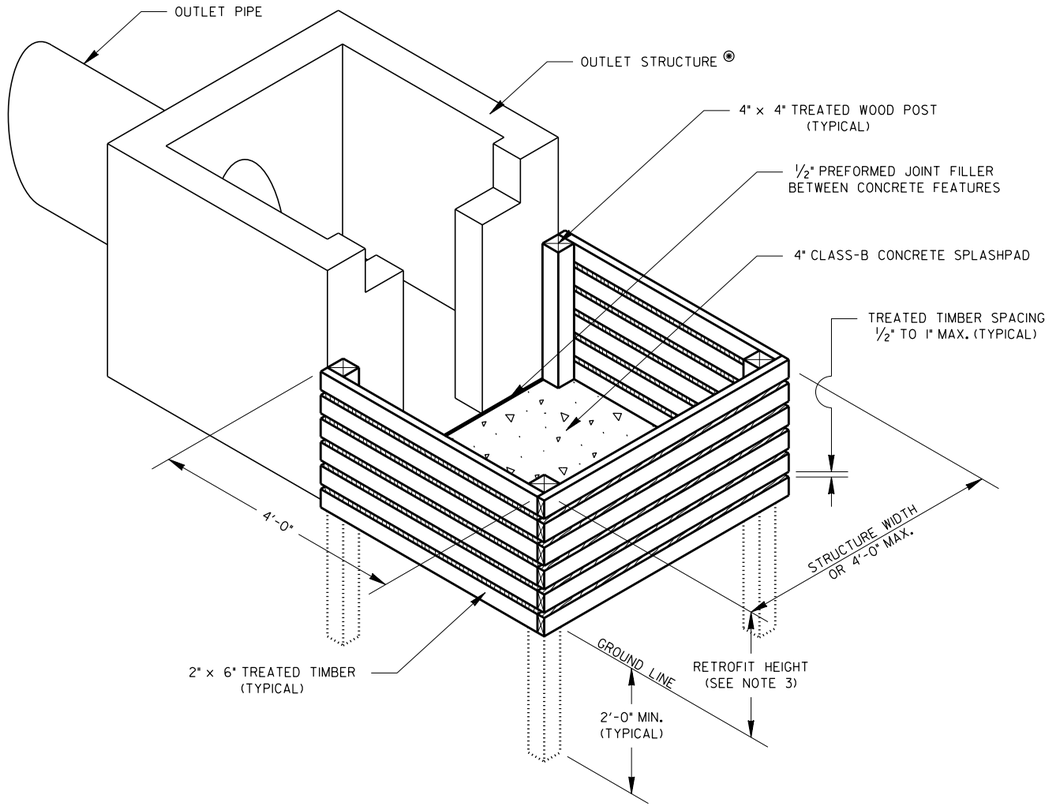

◉ A BOXED OUTLET STRUCTURE WITH A WEIR IS SHOWN. HOWEVER, THE OUTLET STRUCTURE WILL VARY AS DESIGNED FOR THE DETENTION POND OR ROADWAY DRAINAGE STRUCTURE. THE OUTLET STRUCTURE IS INDEPENDENT OF THE RETROFIT. SEE GENERAL NOTE 1 FOR ADDITIONAL REQUIREMENTS.

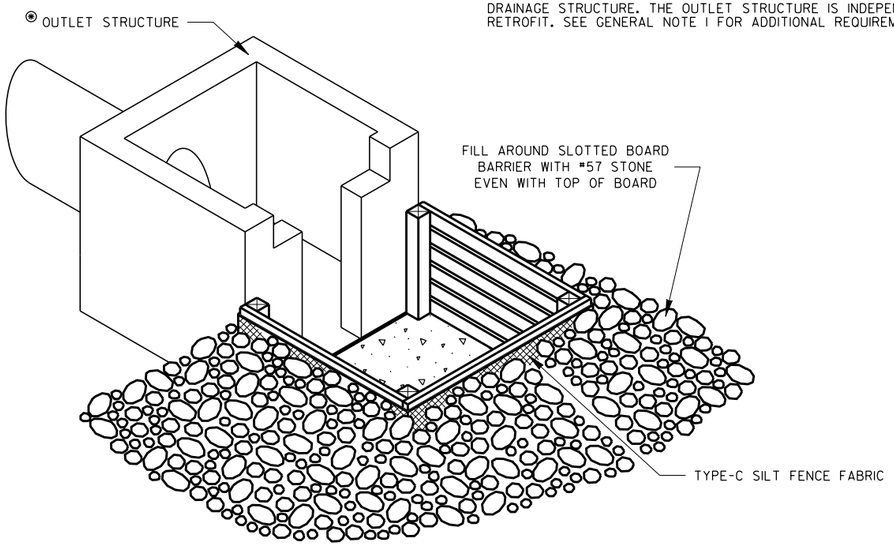

PLAN VIEW

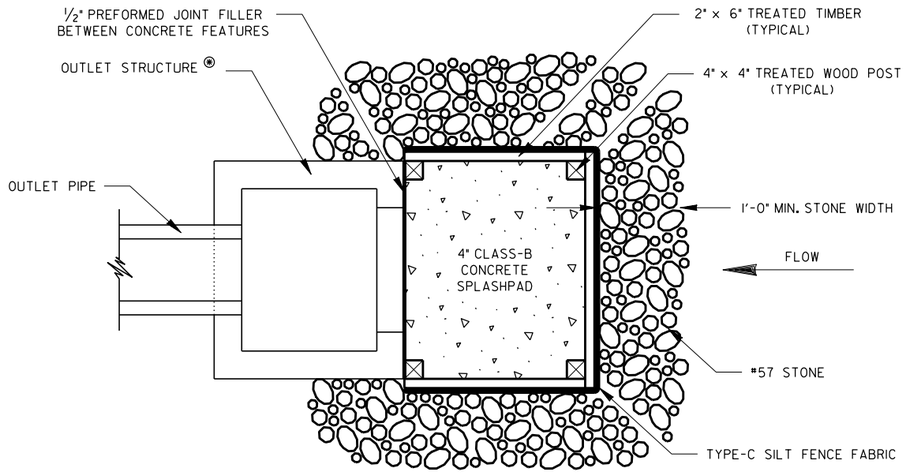

GENERAL NOTES:

1. SLOTTED BOARD DAM WITH STONE FILTER MAY BE TEMPORARILY PLACED ON A DETENTION POND'S PERMANENT OUTLET STRUCTURE. THE TOTAL DRAINAGE AREA TO THE DETENTION POND SHALL BE LESS THAN 100 ACRES.

   THIS RETROFIT BMP MAY ALSO BE TEMPORARILY PLACED ON ROADWAY DRAINAGE STRUCTURES SUCH AS OPEN END PIPE OR WINGED HEADWALLS. THE TOTAL DRAINAGE AREA TO THE ROADWAY DRAINAGE STRUCTURE SHALL BE LESS THAN 30 ACRES. HOWEVER, THIS RETROFIT BMP SHALL NOT BE USED ON ROADWAY DRAINAGE STRUCTURES CONVEYING FLOWING STREAMS.

2. THE DETENTION POND MUST BE CAPABLE OF TEMPORARILY STORING THE REQUIRED SEDIMENT STORAGE VOLUME IN ADDITION TO THE REQUIRED STORMWATER VOLUME.

   THE DETENTION POND SHALL BE LARGE ENOUGH TO TEMPORARILY STORE 67 CUBIC YARDS OF SEDIMENT PER ACRE OF DISTURBED AREA WITHIN IN THE CONTRIBUTING DRAINAGE AREA. THE REQUIRED SEDIMENT STORAGE VOLUME SHALL BE ACHIEVED BY EITHER EXCAVATING THE DETENTION POND OR RAISING THE OUTLET STRUCTURE'S INVERT. THE SEDIMENT STORAGE VOLUME ELEVATION SHALL BE MARKED ON THE OUTLET STRUCTURE OR BY SETTING A MARKED POST NEAR THE OUTLET STRUCTURE.

3. THE HEIGHT OF THE RETROFIT SHOULD BE APPROXIMATELY ONE-HALF THE HEIGHT OF THE DETENTION POND'S OUTLET STRUCTURE. FOR A ROADWAY DRAINAGE STRUCTURE, THE RETROFIT HEIGHT SHALL BE APPROXIMATELY TWO-THIRDS OF THE INSIDE PIPE DIAMETER (2 FEET MINIMUM HEIGHT).

4. ATTACH TYPE-C SILT FENCE FABRIC TO THE TREATED TIMBERS FROM THE GROUND LINE TO THE FULL RETROFIT HEIGHT PRIOR TO PLACEMENT OF NO. 57 STONE.

5. SEE STANDARD SPECIFICATION 163, AND SUPPLEMENTS THERETO FOR THE CONSTRUCTION AND REMOVAL OF RETROFITS. SEE STANDARD SPECIFICATION 165, AND SUPPLEMENTS THERETO FOR THE MAINTENANCE OF RETROFITS. SEDIMENT SHALL BE REMOVED WHEN ONE-THIRD OF THE SEDIMENT STORAGE CAPACITY, NOT THE TOTAL DETENTION POND CAPACITY, IS LOST TO SEDIMENT ACCUMULATION.

PAY ITEMS:

163-0539	CONSTRUCT & REMOVE RETROFIT-SLOTTED BOARD DAM W/STONE FILTER	(EA)
165-0096	MAINTENANCE OF RETROFIT-SLOTTED BOARD DAM W/STONE FILTER	(EA)

BY	REVISION	DATE
PN	ADDED 56-____ DRWG. NO.	07-01-26
DLE	DETAIL CLARIFICATIONS	07-05-18

DEPARTMENT OF TRANSPORTATION
STATE OF GEORGIA

CONSTRUCTION DETAIL D-45

RETROFITTING STRUCTURE FOR TEMPORARY SEDIMENT FILTER

SLOTTED BOARD DAM WITH STONE FILTER

MAY 2008
NOT TO SCALE

NUMBER 56-

GDOT Georgia Department of Transportation | P. I. No.

ROADWAY DRAINAGE STRUCTURE INLET

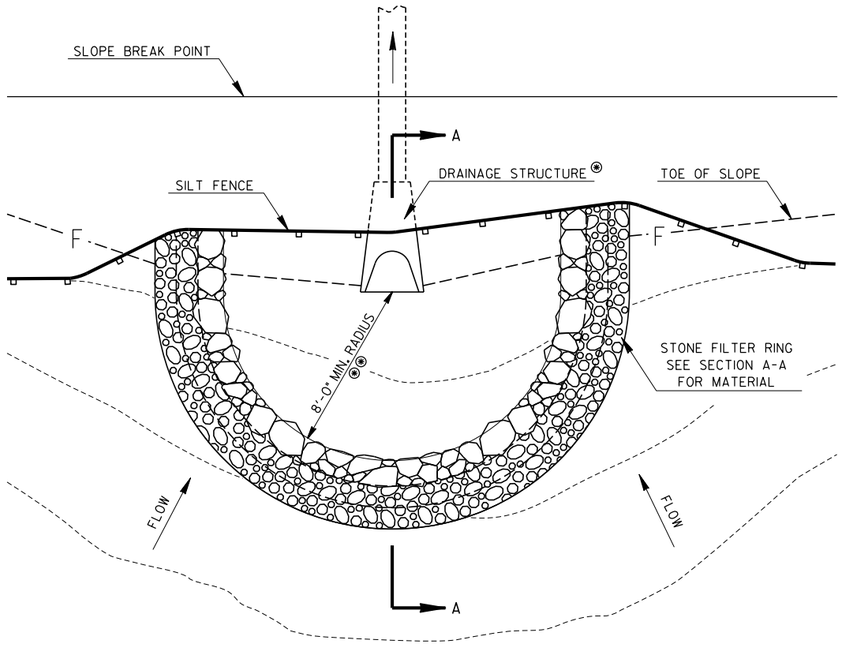

PLAN VIEW

◉ A FLARED END ROADWAY DRAINAGE STRUCTURE IS SHOWN. HOWEVER, OTHER ROADWAY DRAINAGE STRUCTURES OR A DETENTION POND'S OUTLET STRUCTURE MAY APPLY. AN APPROPRIATE RETROFIT BMP IS PREFERRED IN CONJUNCTION WITH THE STONE FILTER RING. SEE GENERAL NOTE 1 FOR ADDITIONAL INFORMATION.

◉◉ THE PREFERRED MINIMUM RADIUS OF THE STONE FILTER RING IS 8 FEET. THE RADIUS MAY BE REDUCED TO A MINIMUM OF 4 FEET FROM THE DRAINAGE STRUCTURE IF A RETROFIT BMP IS NOT PROVIDED. SEE GENERAL NOTE 1 FOR ADDITIONAL REQUIREMENTS.

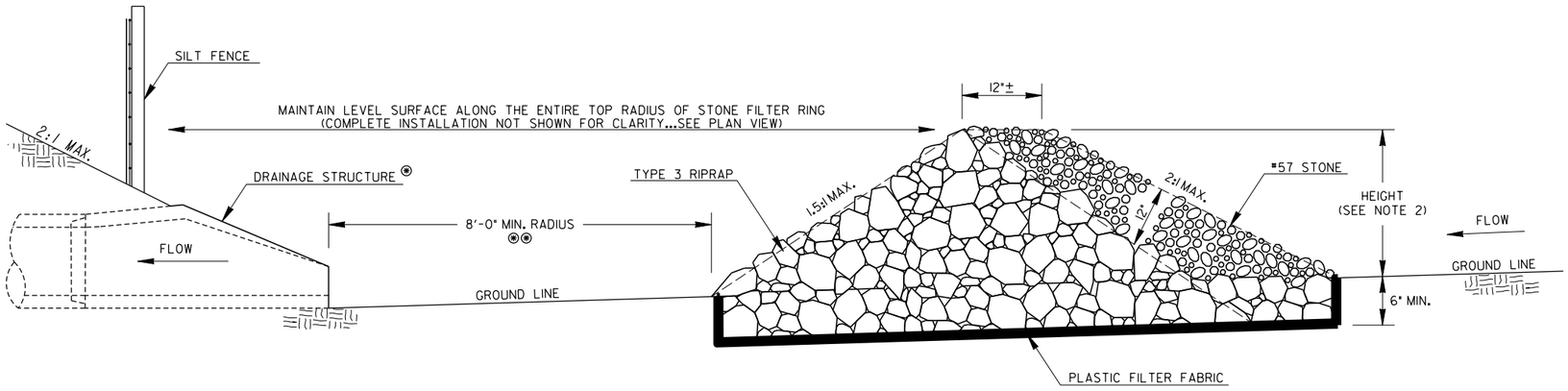

SECTION A-A

GENERAL NOTES:

1. A STONE FILTER RING MAY BE PLACED ON ROADWAY DRAINAGE STRUCTURE INLETS, SUCH AS FLARED END SECTIONS, TO STORE SEDIMENT IN LOW AREAS WITHIN THE PROJECT. IN CONJUNCTION WITH THE STONE FILTER RING, A RETROFIT BMP APPROPRIATE FOR ROADWAY DRAINAGE STRUCTURE INLETS IS PREFERRED. IF A RETROFIT BMP IS NOT PROVIDED, OTHER SEDIMENT CONTROL BMPs SHALL BE PROVIDED DOWNSTREAM OF THE STONE FILTER RING PRIOR TO LEAVING THE PROJECT AREA. THE STONE FILTER RING SHALL BE 8 FEET TO 10 FEET UPSTREAM OF THE RETROFIT BMP. THE STONE FILTER RING IS NOT INTENDED TO SUBSTANTIALLY IMPOUND WATER, ADVERSELY IMPACTING AREAS OUTSIDE OF THE PROJECT.

   A STONE FILTER RING MAY ALSO BE USED IN CONJUNCTION WITH A RETROFIT BMP USED ON A DETENTION POND'S PERMANENT OUTLET STRUCTURE TO PROVIDE ADDITIONAL SEDIMENT FILTERING. THE STONE FILTER RING SHALL BE INSTALLED 8 FEET TO 10 FEET UPSTREAM OF THE POND'S RETROFIT BMP.

   STONE FILTER RINGS ARE NOT RECOMMENDED WITHIN ROADWAY DRAINAGE DITCHES. STONE FILTER RINGS SHALL NOT BE PLACED WITHIN STATE WATERS.

2. THE HEIGHT OF THE STONE FILTER RING SHALL BE A MINIMUM OF 24 INCHES WITH A MAXIMUM HEIGHT OF 48 INCHES. MAINTAIN A LEVEL SURFACE ALONG THE ENTIRE TOP RADIUS OF THE STONE FILTER RING.

3. REFER TO THE EROSION, SEDIMENTATION AND POLLUTION CONTROL PLAN (ESPCP) FOR THE LOCATION OF STONE FILTER RINGS. THE INSTALLATION OF SILT FENCE AND RETROFITS ARE INDEPENDENT OF THE STONE FILTER RING AND WILL BE PAID FOR SEPARATELY AS APPLICABLE TO THE ESPCP.

4. SEE STANDARD SPECIFICATION 163, AND SUPPLEMENTS THERETO FOR THE CONSTRUCTION AND REMOVAL OF STONE FILTER RINGS. SEE STANDARD SPECIFICATION 165, AND SUPPLEMENTS THERETO FOR THE MAINTENANCE OF STONE FILTER RINGS.

PAY ITEMS:
163-0542 CONSTRUCT & REMOVE STONE FILTER RING (EA)
165-0111 MAINTENANCE OF STONE FILTER RING (EA)

BY	REVISION	DRWG. NO.	DATE
PN	ADDED 56-		07-01-26

DEPARTMENT OF TRANSPORTATION
STATE OF GEORGIA

CONSTRUCTION DETAIL
D-46
STONE FILTER RING

JULY 2018
NOT TO SCALE

NUMBER
56-

GDOT Georgia Department of Transportation | P. I. No.

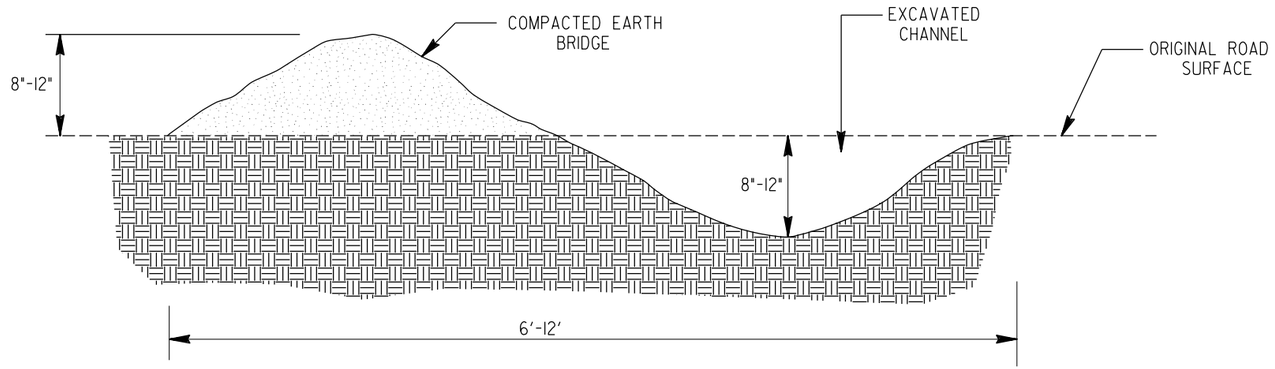

TYPICAL DIVERSION ACROSS ROAD

CONSTRUCTION SPECIFICATIONS FOR DIVERSIONS

1. ALL TREES, BRUSH, STUMPS, OBSTRUCTIONS AND OTHER OBJECTIONAL MATERIAL SHALL BE REMOVED AND DISPOSED OF SO AS NOT TO INTERFERE WITH THE PROPER FUNCTIONING OF THE DIVERSION.

2. THE DIVERSION SHALL BE EXCAVATED OR SHAPED TO LINE, GRADE AND CROSS SECTION AS REQUIRED TO MEET THE CRITERIA SPECIFIED HEREIN AND FREE OF IRREGULARITIES WHICH WILL IMPEDE NORMAL FLOW.

3. ALL FILLS SHALL BE MACHINE COMPACTED AS NEEDED TO PREVENT UNEQUAL SETTLEMENT THAT WOULD CAUSE DAMAGE IN THE COMPLETED DIVERSION.

4. ALL EARTH REMOVED AND NOT NEEDED IN CONSTRUCTION SHALL BE SPREAD OR DISPOSED OF SO THAT IT WILL NOT INTERFERE WITH THE FUNCTIONING OF THE DIVERSION.

5. DIVERSION CHANNEL SHALL BE STABILIZED.

6. PAYMENT IS INCLUDED IN THE OVERALL PRICE BID FOR EARTHWORK. NO SEPERATE PAYMENT SHALL BE MADE FOR DIVERSIONS.

MAXIMUM SPACING BETWEEN DIVERSIONS	
ROAD GRADE (PERCENT)	DISTANCE BETWEEN DIVERSIONS (FEET)
1	400
2	250
5	125
10	80
15	60
20	50
STABLE OUTLETS SHALL BE PROVIDED FOR EACH DIVERSION.	

PN	BY	ADDED 56-____ DRWG. NO. REVISION	07-01-26 DATE

DEPARTMENT OF TRANSPORTATION
STATE OF GEORGIA

CONSTRUCTION DETAIL
D-47
TYPICAL DIVERSION ACROSS ROAD

MAY 2008
NOT TO SCALE

NUMBER 56-

STATE	PROJECT NUMBER	SHEET NO.	TOTAL SHEETS
GA.			

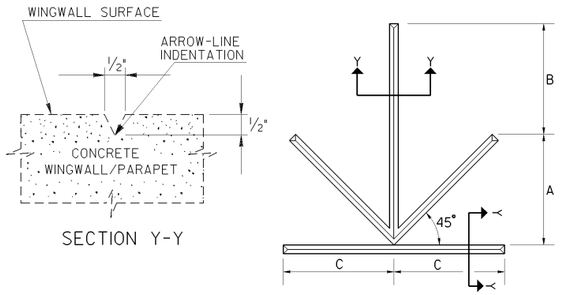

SECTION Y-Y

STAMPED ARROW DETAIL

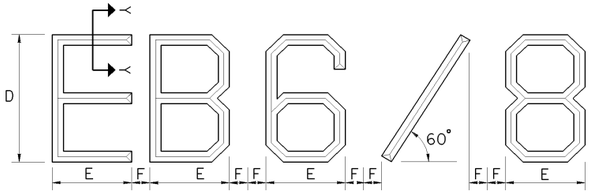

A	B	C	D	E	F
12	12	12	3.5	2.25	0.50

DIMENSIONS FOR STAMPED ARROW, LETTERS AND NUMBERS (INCHES)

NOTE: SEE STANDARD 903IH FOR STAMPED NUMBER DETAILS AND DIMENSIONS.

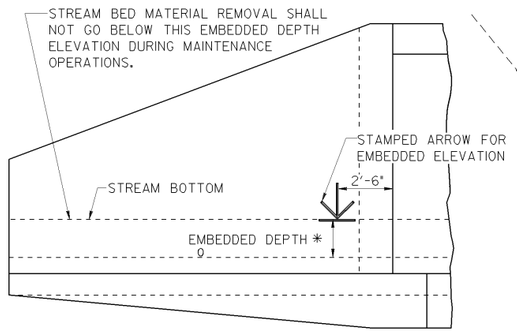

CONCRETE WINGWALL/PARAPET STAMPED ARROW LOCATION DETAIL

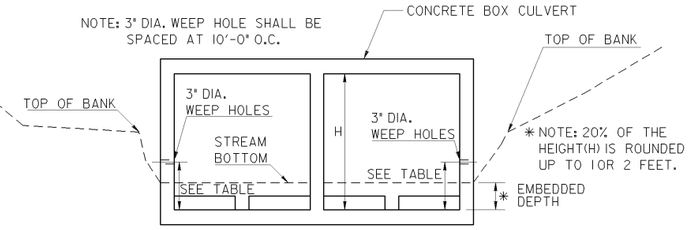

STREAM CROSS SECTION

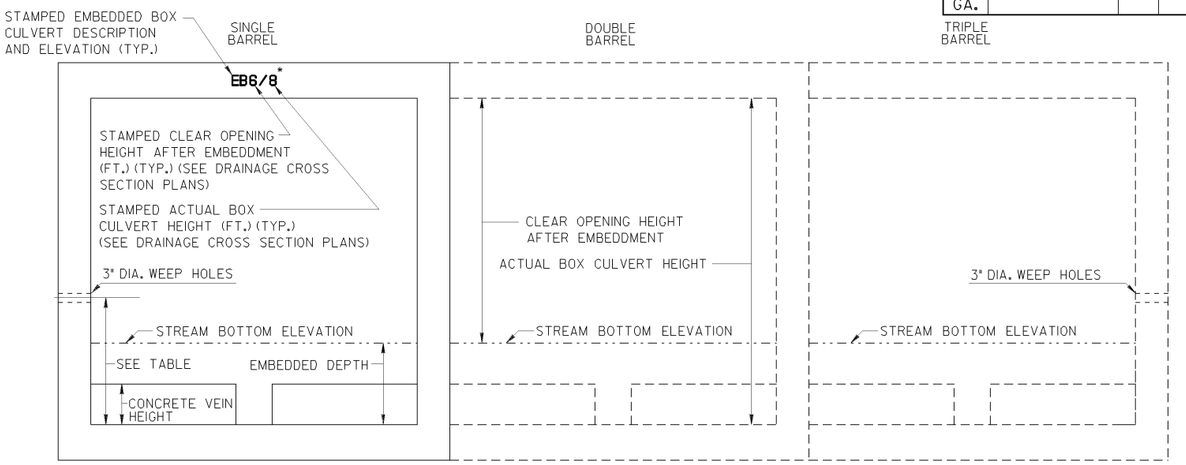

* NOTE: SEE DRAINAGE CROSS SECTION PLANS FOR STAMPED BOX CULVERT AND CLEAR OPENING HEIGHTS AFTER EMBEDDMENT.

CONCRETE BOX CULVERT BARREL ELEVATION

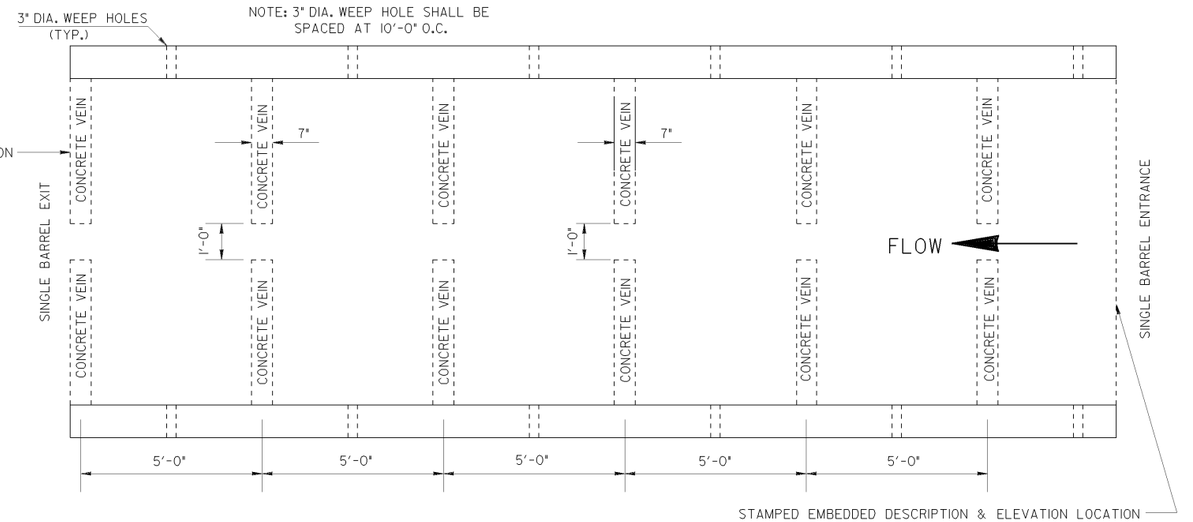

CONCRETE BOX CULVERT BARREL PLAN VIEW

CONCRETE VEIN HEIGHT 6"

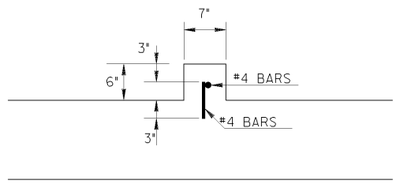

NOTE: DRILL 7/8" ROUND HOLE 3" DEEP FOR DOWEL BARS, FILL WITH EPOXY ADHESIVE AND INSERT BARS.

SECTION

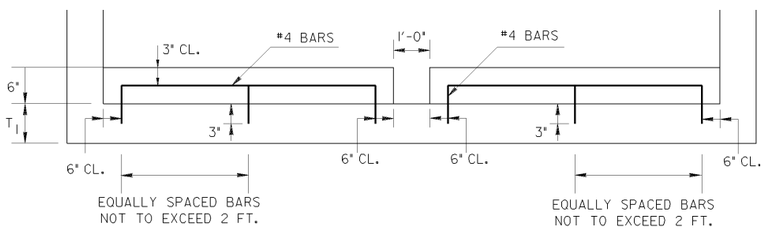

T_1 = CULVERT BOTTOM THICKNESS

ELEVATION

CONCRETE VEIN HEIGHT 12"

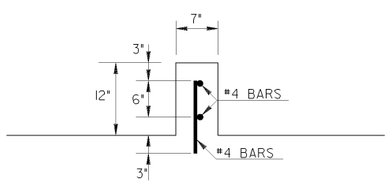

SECTION

T_1 = CULVERT BOTTOM THICKNESS

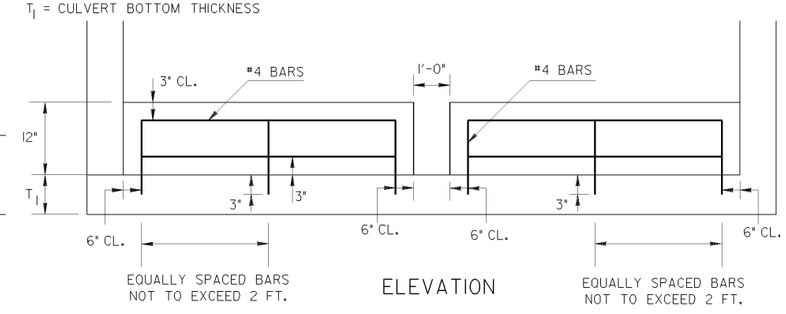

ELEVATION

CONCRETE VEIN REINFORCEMENT DETAILS

EMBEDDED DEPTH	VEIN HEIGHT INCHES	WEEP HOLE LOCATION FEET-INCHES	QUANTITIES	
			CLASS A CONCRETE	REINFORCING STEEL
			CU. YDS. PER LIN. FT. OF VEIN	LBS. PER LIN. FT. OF VEIN
12" BURIED BOX	6"	2'-3"	0.0097	0.668
24" BURIED BOX	12"	3'-3"	0.0194	1.336

GENERAL NOTES:

1. SPECIFICATIONS: GEORGIA STANDARD, CURRENT EDITION & SUPPLEMENTS THERETO.
2. ALL COSTS ASSOCIATED WITH THE INSTALLATION OF CONCRETE VEINS WILL BE INCLUDED IN THE OVERALL BID COST FOR CONCRETE AND BAR REINFORCING STEEL REQUIRED TO BUILD THE CULVERT.
3. CULVERT APRONS ARE REQUIRED FOR CULVERTS THAT ARE EMBEDDED.
4. THE CONTRACTOR WILL NOT PLACE STREAM BOTTOM MATERIAL IN THE CULVERT.

BY	REVISION	DATE
T.C.	ADDED CONCRETE STAMP	11-7-11
	DETAILS AND NOTES.	
G.L.O.	ADDED WEEP HOLE NOTES,	7-21-11
	REV. REBAR SPACING, REV.	
	BAFFLE TO VEIN	

DEPARTMENT OF TRANSPORTATION
STATE OF GEORGIA

CONSTRUCTION DETAIL
FISH PASSAGE CULVERT CONCRETE VEINS

NO SCALE

AUGUST 2008

NUMBER
D-48

STATE	PROJECT NUMBER	SHEET NO.	TOTAL SHEETS
GA.			

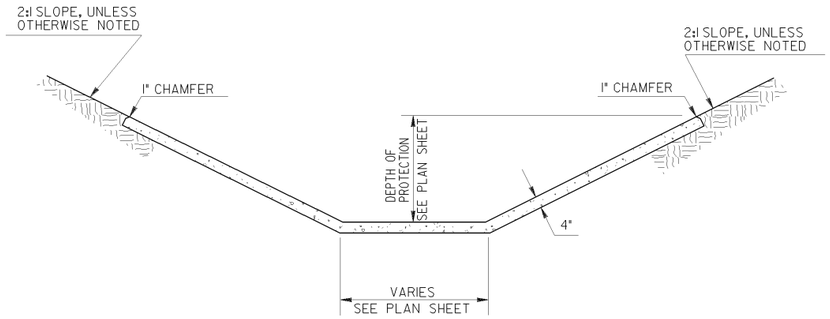

TYPICAL FLAT BOTTOM PAVED DITCH

GENERAL NOTES:

1. SEE CONSTRCUTION DETAIL D-10 (4" CONCRETE DITCH PAVING DETAILS AND QUANTITIES)
2. WEEP HOLE LOCATION SEE CONSTRUCTION DETAIL D-10

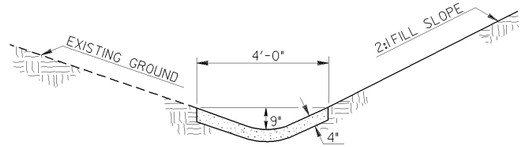

PAVED SWALE DITCH

GENARAL NOTES:

1. CONCRETE SHALL BE PER SECTION 441.
2. EARTH SHALL BE THOROUGHLY TAMPED OVER ENTIRE AREA UNDER DITCH PAVEMENT.

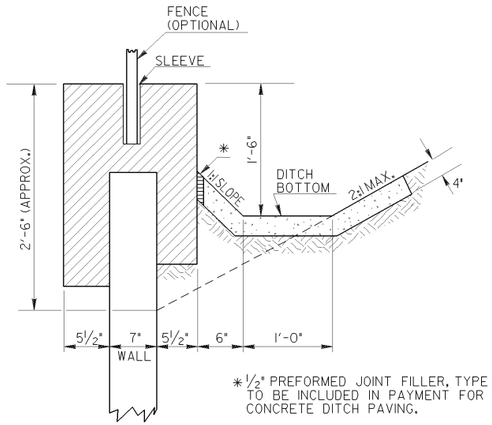

*½" PREFORMED JOINT FILLER, TYPE 2, TO BE INCLUDED IN PAYMENT FOR CONCRETE DITCH PAVING.

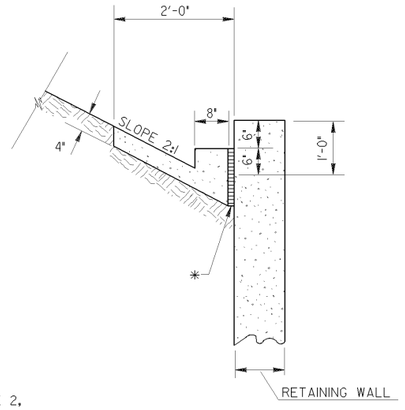

PAVED DITCH (IN BACK OF RETAINING WALL)

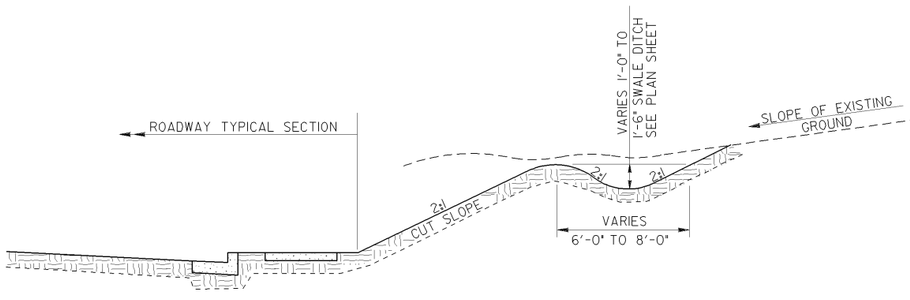

DETAIL OF SWALE DITCH

GENRAL NOTES:

1. APPLICABLE AS SHOWN ON PLANS OR AS DIRECTED BY THE ENGINEER ON CONSTRUCTION.
2. TO BE PAID FOR AS UNCLASSIFIED EXCAVATION OR GRADING COMPLETE.

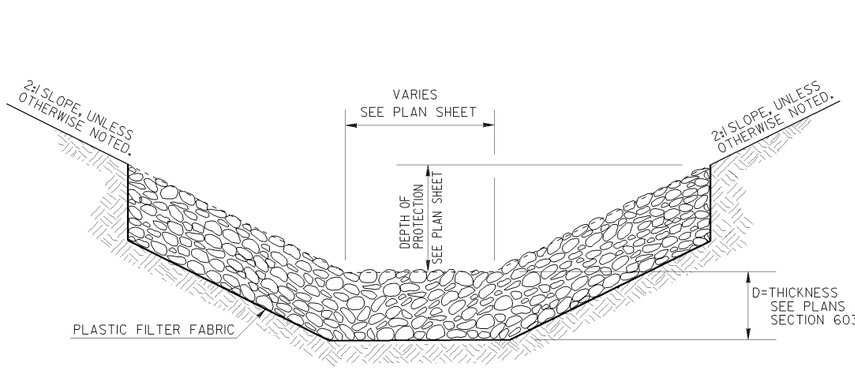

TYPICAL FLAT BOTTOM RIP RAP DITCH

GENERAL NOTES:

1. BASIS OF PAYMENT: STONE RIP RAP, PER SQ. YD.

DATE	DEPARTMENT OF TRANSPORTATION STATE OF GEORGIA		
REVISION	CONSTRUCTION DETAIL DITCH BACK OF RETAINING WALL SWALE DITCHES; RIP RAP DITCH		
	NO SCALE	FEBRUARY, 2011	
BY			NUMBER D-49

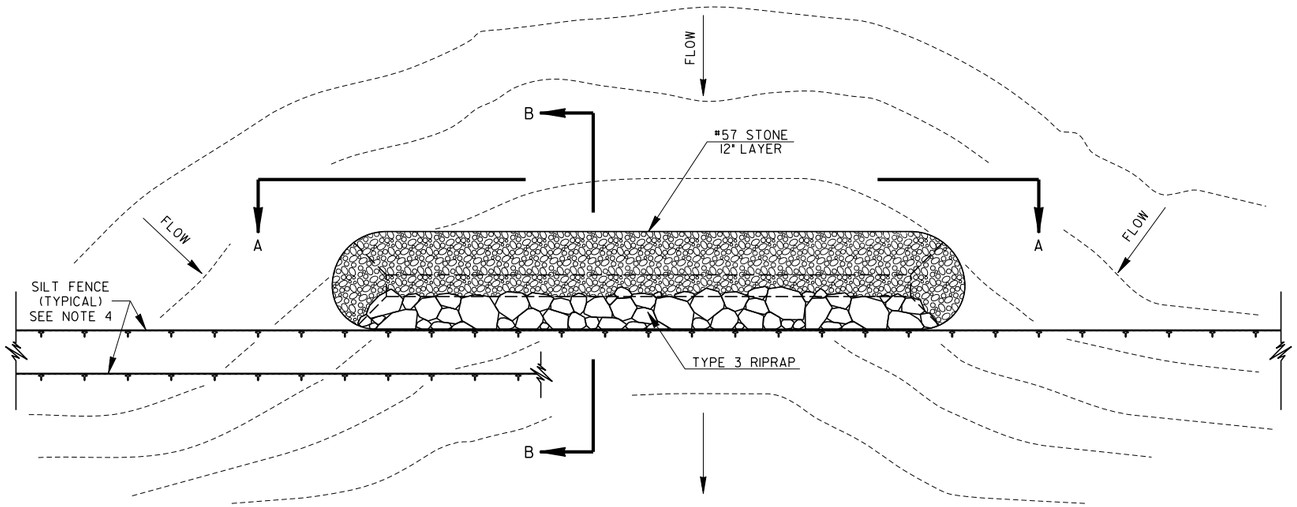

PLAN VIEW

◉ MAINTAIN A LEVEL SURFACE ALONG THE TOP OF THE STONE FILTER BERM WITHIN THE LOW AREA. THE PREFERRED MAXIMUM LENGTH OF THE LEVEL SURFACE AND STONE FILTER BERM IS 50' BUT MAY VARY DEPENDING ON TOPOGRAPHIC FEATURES.

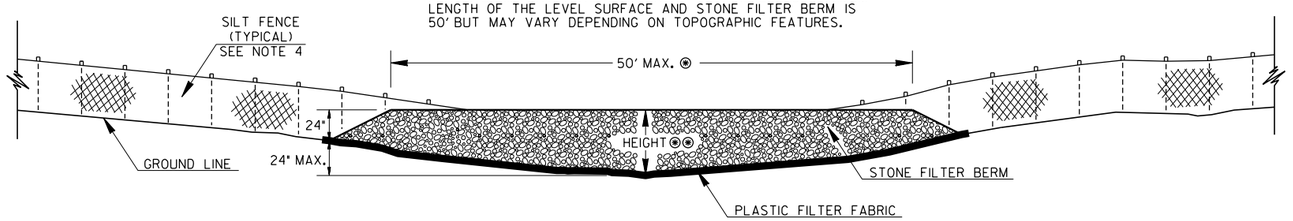

SECTION A-A

◉◉ SEE NOTE 3 FOR STONE FILTER BERM HEIGHT.

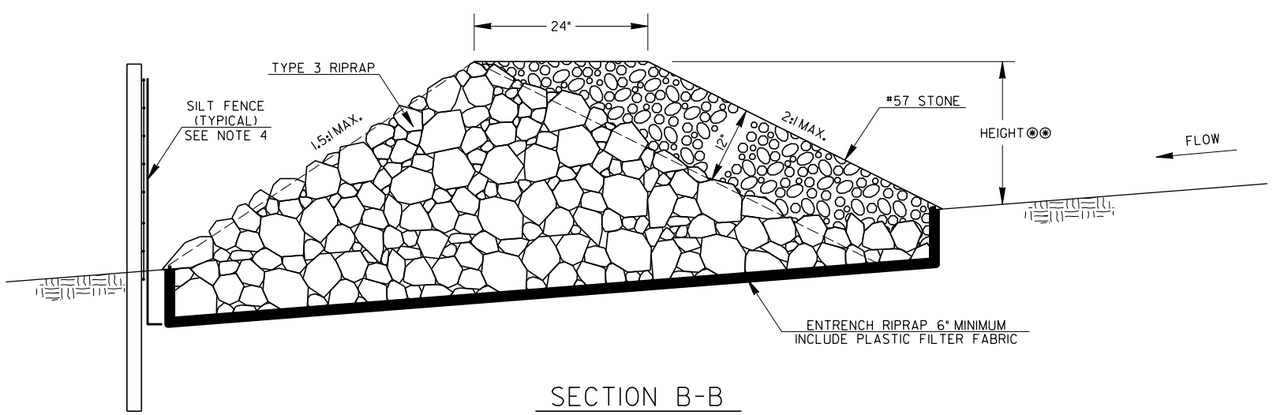

SECTION B-B

GENERAL NOTES:

1. A STONE FILTER BERM IS AN ADDITIONAL PERIMETER CONTROL BMP WHERE PERIMETER SILT FENCE ALONE MAY BE INSUFFICIENT FOR SHEET FLOW AND/OR SHALLOW CONCENTRATED FLOW TO A COMMON LOW AREA, THERE IS NO WELL-DEFINED CHANNEL FOR A ROCK FILTER DAM, AND/OR CONSTRUCTING A ROCK OUTLET TEMPORARY SEDIMENT TRAP IS NOT APPLICABLE.

2. SEDIMENT STORED BY A STONE FILTER BERM IS CONSIDERED PRE-TREATMENT FOR THE PERIMETER SILT FENCE AND SHALL NOT BE CALCULATED AS ADDITIONAL SEDIMENT STORAGE IN THE SEDIMENT STORAGE TABLE PROVIDED IN THE EROSION, SEDIMENTATION AND POLLUTION CONTROL PLAN (ESPCP). CONVENTIONAL OR APPROVED ALTERNATIVE/EQUIVALENT BMPs MUST BE USED TO STORE SEDIMENT UPSTREAM AND/OR DOWNSTREAM OF A STONE FILTER BERM.

   A ROCK OUTLET TEMPORARY SEDIMENT TRAP SHALL BE EVALUATED PRIOR TO CONSIDERING A STONE FILTER BERM. REFER TO DETAIL D-53 FOR A ROCK OUTLET TEMPORARY SEDIMENT TRAP.

3. THE HEIGHT OF THE STONE FILTER BERM SHALL BE 24 INCHES AT THE ENDS AND NOT MORE THAN 48 INCHES ABOVE THE LOWEST POINT OF THE GROUND LINE.

4. REFER TO THE ESPCP FOR THE LOCATION OF PERIMETER SILT FENCE AND STONE FILTER BERMS. REFER TO DETAIL D-24 FOR THE INSTALLATION OF PERIMETER SILT FENCE. SILT FENCE WILL BE PAID FOR SEPARATELY.

5. SEE STANDARD SPECIFICATION 163, AND SUPPLEMENTS THERETO FOR THE CONSTRUCTION AND REMOVAL OF STONE FILTER BERMS. SEE STANDARD SPECIFICATION 165, AND SUPPLEMENTS THERETO FOR THE MAINTENANCE OF STONE FILTER BERMS.

6. STONE FILTER BERMS SHALL NOT BE PLACED ACROSS FLOWING STREAMS.

PAY ITEMS:
163-0543 CONSTRUCT & REMOVE STONE FILTER BERM (LF)
165-0112 MAINTENANCE OF STONE FILTER BERM (LF)

PN	BY	REVISION	DRWG. NO.	DATE
		ADDED 56-_____		07-01-26

DEPARTMENT OF TRANSPORTATION
STATE OF GEORGIA

CONSTRUCTION DETAIL
D-50
STONE FILTER BERM

JANUARY 2018
NOT TO SCALE

NUMBER
56-

GDOT Georgia Department of Transportation | P. I. No.

TYPICAL FLOATING AND STAKED TURBIDITY CURTAIN MATERIAL

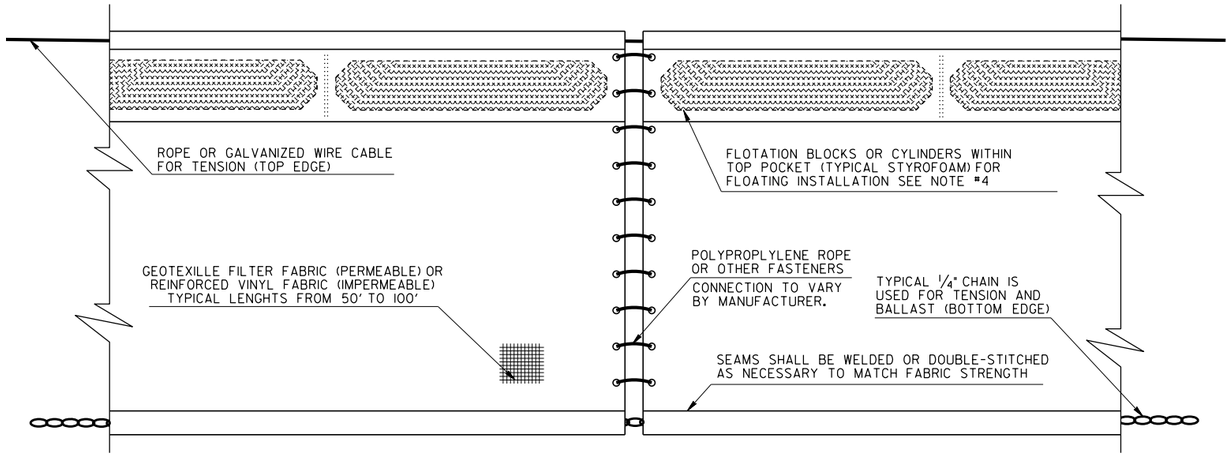

TYPICAL FLOATING CONSTRUCTION LAYOUT DETAIL

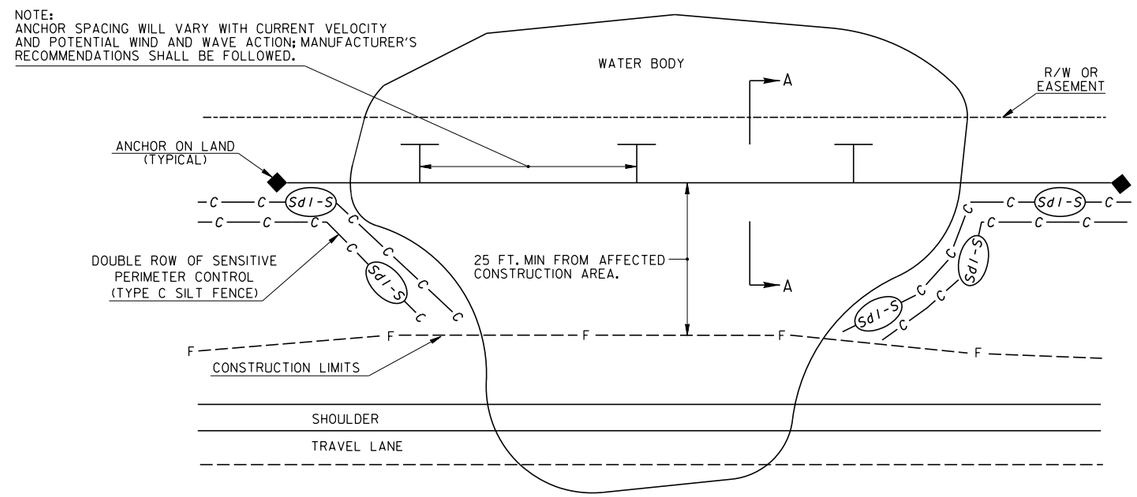

SECTION A-A

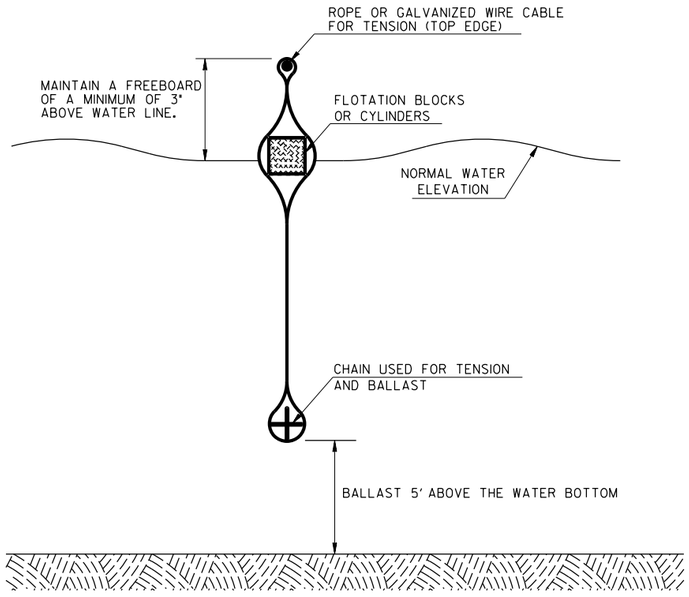

SECTION B-B

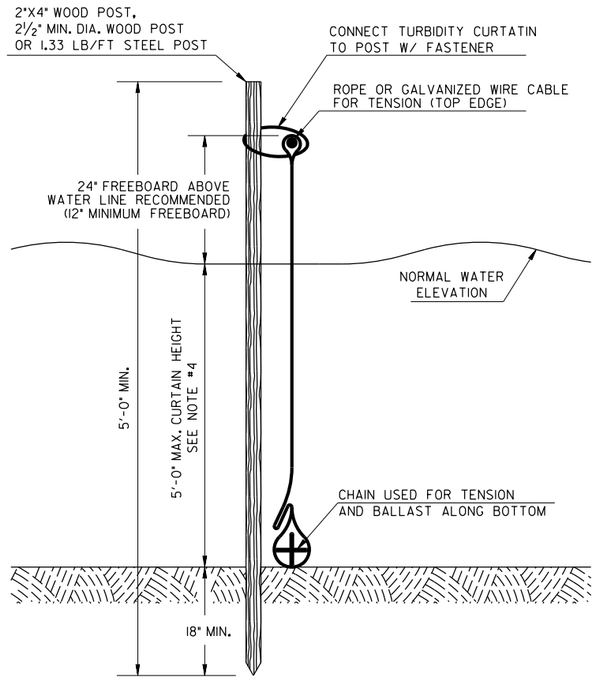

TYPICAL STAKED CONSTRUCTION LAYOUT DETAIL

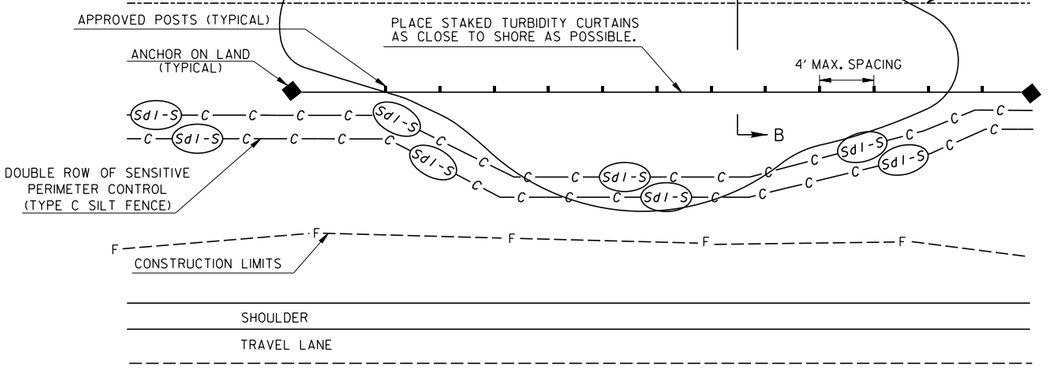

GENERAL NOTES:

1. TURBIDITY CURTAINS ARE ALSO KNOWN AS A FLOATING BOOM, SILT RETENTION BARRIER, OR SILT CURTAIN.
2. REFER TO STANDARD SPECIFICATIONS 165 AND 170 AND SUPPLEMENTS THERETO.
3. TURBIDITY CURTAINS SHOULD ONLY BE USED WHEN PERMITTED FILL IS BEING PLACED INTO A WATER BODY OR AS A SUPPLEMENT TO ADEQUATELY PLACED PERIMETER BMPs TO ALLOW SEDIMENT TO DROP OUT OF SUSPENSION AND REMAIN WITHIN THE CONSTRUCTION AREA.
4. FLOATING TURBIDITY CURTAIN TYPICAL FLOTATION BLOCKS OR CYLINDERS SHOULD HAVE A MINIMUM END AREA OF 49 SQUARE INCHES. HOWEVER, SIZE AND BUOYANCY REQUIREMENTS DEPEND ON WEIGHT AND CURTAIN HEIGHT.

   STAKED TURBIDITY CURTAINS SHOULD BE LIMITED TO 5 FEET UNLESS DIRECTED.
5. THE CONTRACTOR SHALL FOLLOW THE MANUFACTURER'S RECOMMENDATION AND GUIDELINES FOR INSTALLATION OF TURBIDITY CURTAINS.

PAY ITEMS:

170-1000	FLOATING SILT RETENTION BARRIER	(LF)
170-2000	STAKED SILT RETENTION BARRIER	(LF)
165-0050	MAINTENANCE OF SILT RETENTION BARRIER	(LF)

PN	BY	REVISION	DRWG. NO.	DATE
		ADDED 56-		07-01-26

DEPARTMENT OF TRANSPORTATION
STATE OF GEORGIA

CONSTRUCTION DETAIL D-51

TURBIDITY CURTAIN

(SILT RETENTION BARRIER)
FLOATING OR STAKED

APRIL 2016
NOT TO SCALE

NUMBER 56-

GDOT Georgia Department of Transportation | P. I. No.

BALED STRAW CHECK DAM

PLAN VIEW

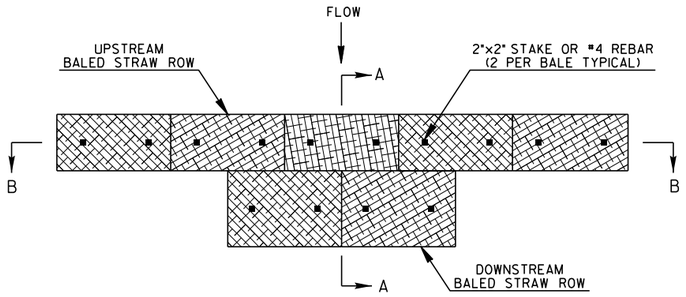

SECTION A-A

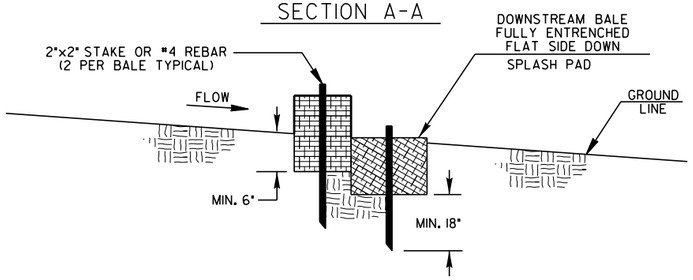

SECTION B-B

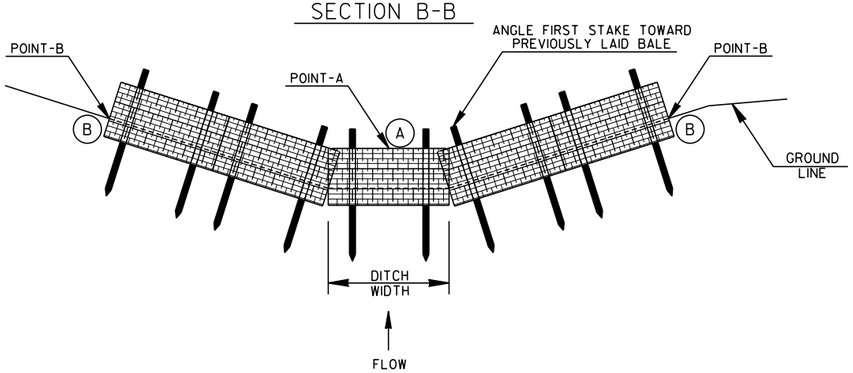

BALED STRAW CHECK DAM GENERAL NOTES:

1. BALED STRAW DIMENSIONS MAY VARY. ASSUME APPROXIMATE DIMENSIONS OF 14"W x 18"H x 36"L FOR A TWO STRINGER AND 16"W x 24"H X 48"L FOR A THREE STRINGER. BALES SHOULD BE BOUND WITH WIRE OR NYLON INSTEAD OF TWINE.
2. BALES SHOULD BE PLACED IN ROWS WITH BALE ENDS TIGHTLY ABUTTING THE ADJACENT BALES. THE TOP OF THE UPSTREAM BALES IN THE CENTER OF CHANNEL SHOULD BE LEVEL AND SET AT THE SAME ELEVATION. THE DOWNSTREAM BALES SHOULD BE ENTRENCHED EVEN WITH THE CHANNEL BOTTOM.
3. THE GROUND LINE AT POINT-B SHALL ALWAYS BE AT MINIMUM OF 6 INCHES ABOVE POINT-A.
4. REMOVE SEDIMENT ONCE THE ACCUMULATED HEIGHT HAS REACHED HALF THE STORAGE HEIGHT.
5. INSTALLATION MAY BE ADJUSTED SLIGHTLY TO MEET FIELD CONDITIONS; HOWEVER, SPLASH PAD IS REQUIRED.

PAY ITEMS:

163-0529 CONSTRUCT & REMOVE TEMPORARY SEDIMENT BARRIER OR BALED STRAW CHECK DAM (LF)
165-0041 MAINTENANCE OF CHECK DAMS - ALL TYPES (LF)

SPECIAL NOTES:

1. BALED STRAW AND COMPOST FILTER SOCK CHECK DAMS MAY BE USED FOR FLOWS UP TO 2.0 CFS OR DRAINAGE AREAS UP TO 1.0 ACRE. IF THESE ITEMS ARE USED IN DRAINAGE AREAS GREATER THAN 1.0 ACRE, FLOWS GREATER THAN 2.0 CFS, OR WITHOUT A SEDIMENT BASIN, A MINIMUM OF ONE ROCK FILTER DAM AT THE DOWNSTREAM DISCHARGE POINT SHALL BE USED IN CONJUNCTION WITH BALED STRAW OR COMPOST FILTER SOCK CHECK DAMS.
2. BALED STRAW AND COMPOST FILTER SOCK CHECK DAMS SHALL NOT BE PLACED WITHIN FLOWING STREAMS OR IN A TIDAL AREA BELOW HIGH TIDE.

APPROXIMATE BALED STRAW DIMENSIONS

(SEE NOTE# 1)

THREE STRINGER BOUNDING

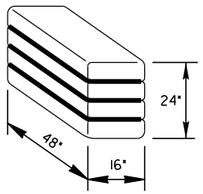

TWO STRINGER BOUNDING

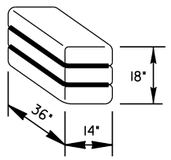

COMPOST FILTER SOCK CHECK DAM

PLAN VIEW

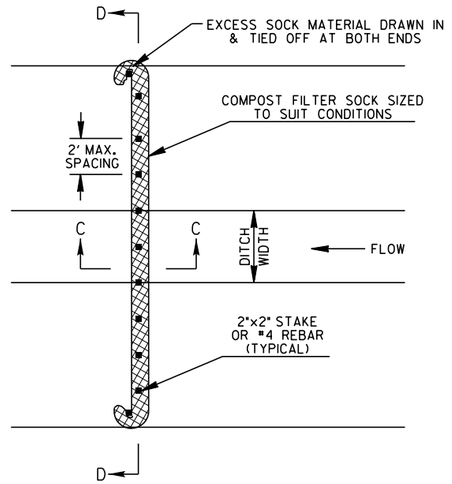

SECTION C-C

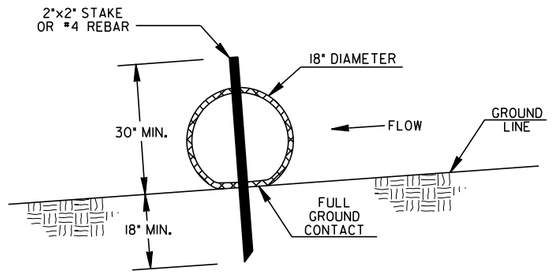

SECTION D-D

NOTE: CROSS-SECTION SHOWN IS AN EXAMPLE OF A TYPICAL CUT SECTION WITH A 4-FT FLAT BOTTOM DITCH. ACTUAL COMPOST FILTER SOCKS SHALL BE INSTALLED SIMILARLY ACCORDING TO FIELD CONDITIONS.

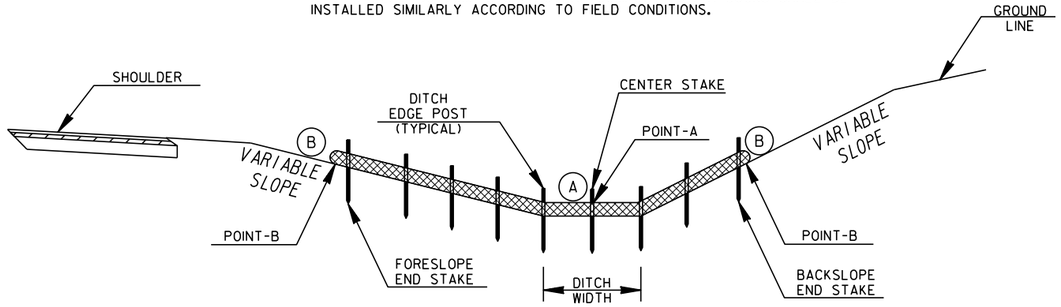

COMPOST FILTER SOCK CHECK DAM GENERAL NOTES:

1. THE CONTRACTOR MAY ELECT TO USE 18" DIAMETER COMPOST FILTER SOCK CHECK DAMS IN LIEU OF BALED STRAW CHECK DAMS. NO ADDITIONAL PAYMENT WILL BE MADE FOR THE CONSTRUCTION, REMOVAL, OR MAINTENANCE OF COMPOST FILTER SOCK CHECK DAMS.
2. COMPOST FILTER MEDIA SHALL MEET THE SPECIFICATIONS IN THE LATEST EDITION OF THE "MANUAL FOR EROSION AND SEDIMENT CONTROL IN GEORGIA". THE CONTRACTOR SHALL PROVIDE VERIFICATION OF MEETING SPECIFICATIONS IF REQUESTED.
3. THE GROUND LINE AT POINT-B SHALL BE A MINIMUM OF 6 INCHES ABOVE POINT-A.
4. ENSURE COMPOST FILTER SOCK HAS FULL CONTACT WITH GROUND SURFACE. PLACE ONE STAKE AT THE CENTER OF CHANNEL, AT THE TOE OF FORESLOPE AND BACKSLOPE, AND AT THE ENDS OF DEVICE. STAKES SHALL HAVE A MAXIMUM SPACING OF 2 FEET.
5. REMOVE SEDIMENT ONCE THE ACCUMULATED HEIGHT HAS REACHED HALF THE STORAGE HEIGHT.

BY	REVISION	DRWG. NO.	DATE
PN	ADDED 56-		07-01-26

DEPARTMENT OF TRANSPORTATION
STATE OF GEORGIA

CONSTRUCTION DETAIL
D-52

BALED STRAW & COMPOST FILTER SOCK CHECK DAMS FOR EROSION CONTROL

APRIL 2016
NOT TO SCALE

NUMBER 56-

GDOT Georgia Department of Transportation | P. I. No.

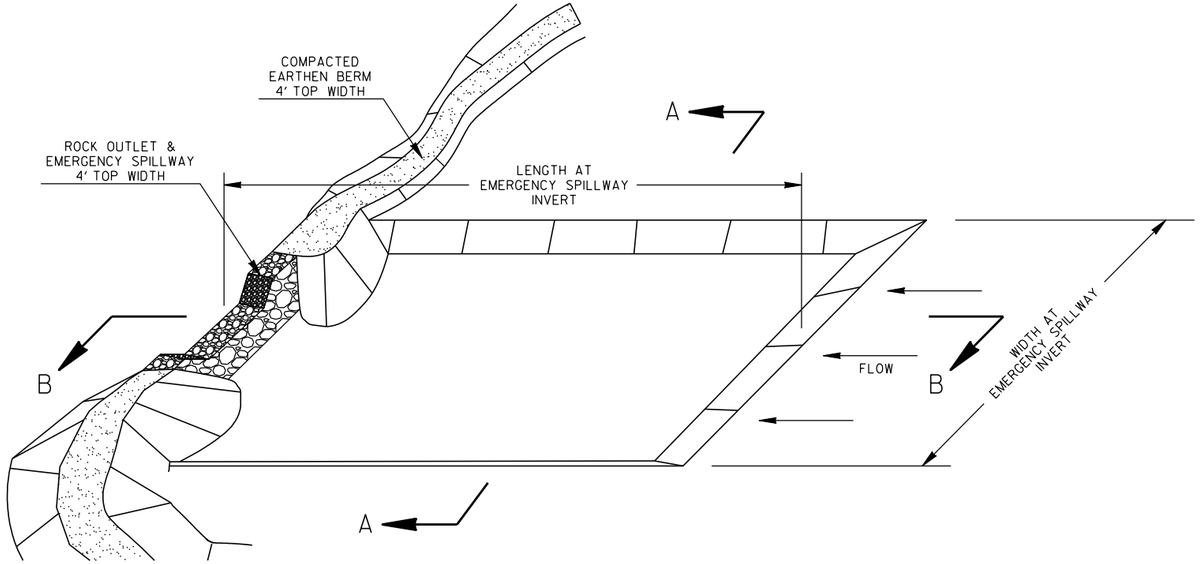

SECTION A-A

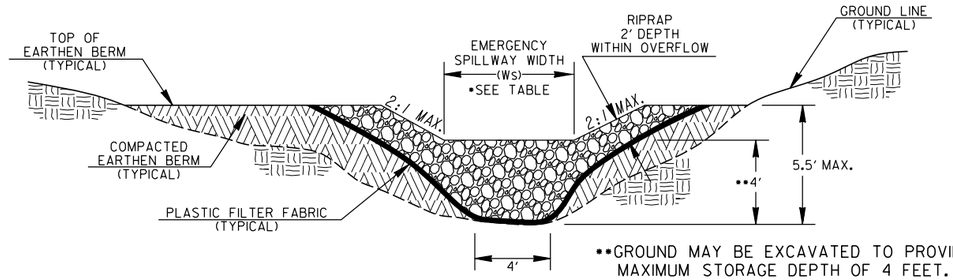

••GROUND MAY BE EXCAVATED TO PROVIDE MAXIMUM STORAGE DEPTH OF 4 FEET.

SECTION B-B

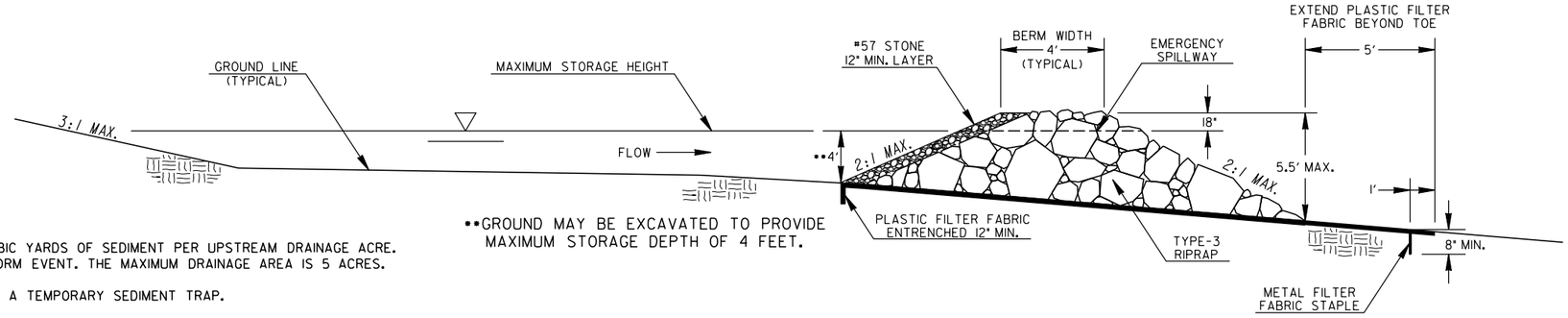

••GROUND MAY BE EXCAVATED TO PROVIDE MAXIMUM STORAGE DEPTH OF 4 FEET.

GENERAL NOTES:

1. A TEMPORARY SEDIMENT TRAP IS DESIGNED TO STORE A MINIMUM OF 67 CUBIC YARDS OF SEDIMENT PER UPSTREAM DRAINAGE ACRE. IT INCLUDES AN EMERGENCY SPILLWAY TO SAFELY CONVEY THE 10-YEAR STORM EVENT. THE MAXIMUM DRAINAGE AREA IS 5 ACRES.

   A TEMPORARY SEDIMENT BASIN SHALL BE EVALUATED PRIOR TO CONSIDERING A TEMPORARY SEDIMENT TRAP.

2. THE NATURAL TOPOGRAPHY SHOULD BE USED AS THE SEDIMENT STORAGE AREA. COMPACTED EARTHEN BERMS SHOULD BE CONSTRUCTED IN AREAS SHOWN IN THE EROSION, SEDIMENT AND POLLUTION CONTROL PLAN (ESPCP) TO PROVIDE THE REQUIRED SEDIMENT STORAGE NOTED IN THE SEDIMENT STORAGE TABLE OF THE ESPCP.

   AN EXCAVATED AREA WITH A MINIMUM LENGTH TO WIDTH RATIO OF 2:1 AND MAXIMUM STORAGE DEPTH OF 4 FEET MAY BE CONSTRUCTED TO PROVIDE THE REQUIRED SEDIMENT STORAGE NOTED IN THE SEDIMENT STORAGE TABLE OF THE ESPCP. BAFFLES ARE REQUIRED WHEN THE LENGTH TO WIDTH RATIO IS LESS THAN 2:1 TO PROVIDE THE REQUIRED EFFECTIVE LENGTH. BAFFLES SHALL BE MADE OF EXTERIOR GRADE 1/2" THICK PLYWOOD MOUNTED ON 4"x4" HARDWOOD POSTS ADEQUATELY ANCHORED.

   EARTHEN BERMS SHALL BE CONSTRUCTED AND COMPACTED IN 6 INCH MAXIMUM LAYERS TO A 5.50 FEET MAXIMUM HEIGHT MEASURED FROM THE DOWNSTREAM TOE OF SLOPE TO THE TOP OF THE BERM. CONSTRUCT EARTHEN BERMS WITH SOIL MATERIAL THAT CAN BE COMPACTED TO A UNIFORM DENSITY AS DIRECTED BY THE ENGINEER TO PREVENT SEEPAGE OR FAILURE OF THE EARTHEN BERM.

3. SLOPES SHALL NOT EXCEED 2:1 FOR ANY EXCAVATIONS AND COMPACTED EARTHEN BERMS. AN AREA WITH A 3:1 MAXIMUM SLOPE SHOULD BE PROVIDED TO ALLOW EASY ACCESS FOR MAINTENANCE. APPROVED EROSION CONTROL MATTING SHALL BE INSTALLED ON EARTHEN SLOPES GREATER THAN 2.5:1

4. THE CLEANOUT VOLUME IS ONE-THIRD OF THE TOTAL STORAGE VOLUME. THE CLEANOUT VOLUME SHALL BE CALCULATED AND MARKED WITH A STAKE AT THE OUTLET.

5. THE ROCK OUTLET AND EMERGENCY SPILLWAY SHALL BE MADE OF TYPE-3 RIPRAP FACED WITH #57 STONE ON THE UPSTREAM FACE. PLASTIC FILTER FABRIC IS REQUIRED UNDERNEATH RIPRAP. THE PLASTIC FILTER FABRIC SHOULD BE ENTRENCHED A MINIMUM OF 12" AT THE TOE OF THE UPSTREAM FACE AND EXTENDED 5' BEYOND DOWNSTREAM TOE OF SLOPE.

6. THE DESIGNER SHALL PROVIDE THE LOCATION, LENGTH, WIDTH, Q_{10}, AND CLEANOUT ELEVATION FOR EACH TEMPORARY SEDIMENT TRAP IN THE ESPCP. THE DRAINAGE AREA AND SEDIMENT STORAGE VOLUME SHALL BE PROVIDED IN THE SEDIMENT STORAGE TABLE. REFER TO THE LATEST EDITION OF GSWCC'S "MANUAL FOR EROSION AND SEDIMENT CONTROL IN GEORGIA" FOR ADDITIONAL INFORMATION ON TEMPORARY SEDIMENT TRAPS.

7. ALL ITEMS SHOWN AND INCIDENTAL ITEMS NECESSARY FOR THE CONSTRUCTION, REMOVAL, AND MAINTENANCE OF THE TEMPORARY SEDIMENT TRAP ARE TO BE INCLUDED IN THE RESPECTIVE OVERALL BID PRICE OF EACH TEMPORARY SEDIMENT TRAP.

8. TEMPORARY SEDIMENT TRAPS SHALL NOT BE PLACED WITHIN FLOWING STREAMS OR IN A TIDAL AREA BELOW HIGH TIDE.

PAY ITEMS:

163-0535 CONSTRUCT AND REMOVE TEMPORARY SEDIMENT TRAP, STA NO- (EA)
165-0107 MAINTENANCE OF TEMPORARY SEDIMENT TRAP, STA NO- (EA)

EMERGENCY SPILLWAY WIDTH (Ws)

Q_{10} (CFS)	≤20	20<Q≤24	25<Q≤29	30<Q≤33	34<Q<38
Ws (FT)	8	10	12	14	16

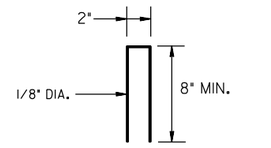

METAL FILTER FABRIC STAPLE

BY	DATE	DEPARTMENT OF TRANSPORTATION STATE OF GEORGIA
PN	07-01-26	CONSTRUCTION DETAIL D-53 ROCK OUTLET TEMPORARY SEDIMENT TRAP
REVISION	ADDED 56-____ DRWG. NO.	
	APRIL 2016 NOT TO SCALE	NUMBER 56-

GDOT Georgia Department of Transportation | P. I. No.

SOD LAYOUT

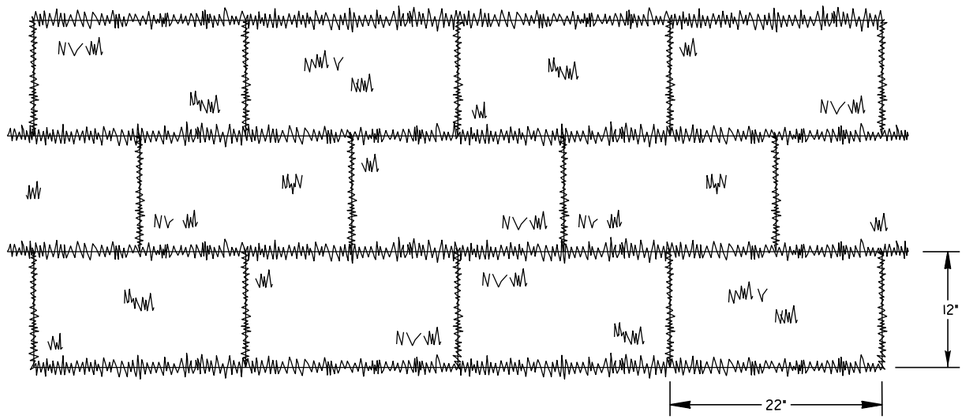

NOTE: SOD MAY BE EITHER 12" WIDE BY 22" LONG BLOCKS OR 21" WIDE BY 52' LONG ROLLS.

ABUTTING SOD

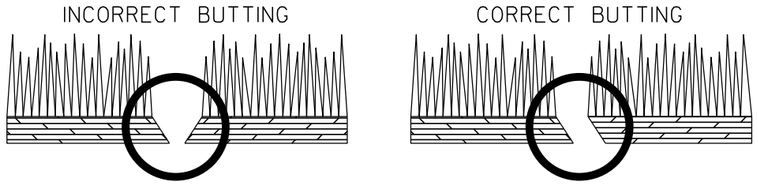

SOD APPEARANCE

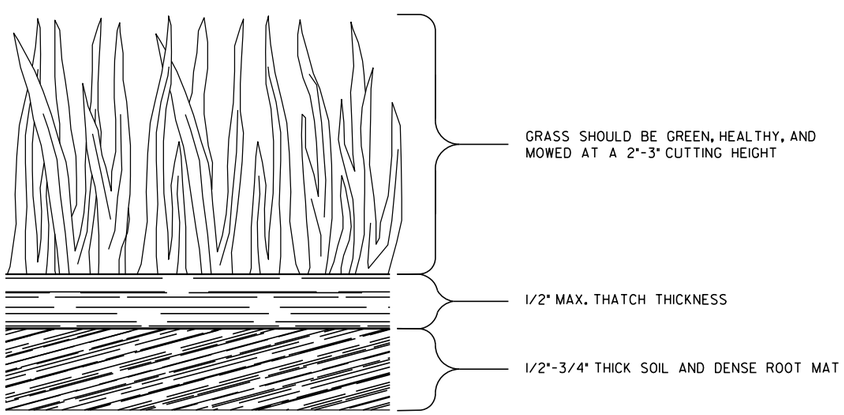

GENERAL NOTES:

1. SOD SHALL MEET SECTIONS 700 AND 890 OF THE STANDARD SPECIFICATIONS AND SUPPLEMENTS THERETO. SOD SHALL BE CUT INTO 12"W×22"L BLOCKS OR 21"W×52'L ROLLS.
2. PLACE SOD IN A STAGGERED PATTERN ENSURING FIRM CONTACT WITH THE SOIL. BUTT THE STRIPS TIGHTLY AGAINST EACH OTHER WITH THE AUTOMATIC SOD CUTTER ANGLES CORRECTLY MATCHED WITHOUT SPACES OR OVERLAP.
3. PLACE THE LONG SIDE OF SOD PERPENDICULAR TO DRAINAGE FLOW IF INSTALLED IN DITCHES.
4. STAKE SOD PLACED IN DITCHES OR SLOPES STEEPER THAN 2:1 OR ANY OTHER AREAS WHERE SOD SLIPPING MAY OCCUR. USE WOOD STAKES THAT ARE A MINIMUM OF 8" LONG AND A MAXIMUM OF 1" WIDE. DRIVE STAKES FLUSH WITH THE TOP OF SOD AND USE A MINIMUM OF 8 STAKES PER SQUARE YARD TO HOLD SOD IN PLACE.
5. ROLL SOD IMMEDIATELY TO ACHIEVE FIRM CONTACT WITH THE SOIL.
6. WATER THE SOD IMMEDIATELY AFTER INSTALLATION AND WATER TO A DEPTH OF 4" AS NEEDED.
7. MOW ESTABLISHED SOD TO A HEIGHT NOT LESS THAN 2"-3" AS NECESSARY.

PAY ITEM:
700-9300 SOD (SY)

BY	DATE	REVISION	DRWG. NO.
PN	07-01-26	ADDED 56-	

DEPARTMENT OF TRANSPORTATION
STATE OF GEORGIA

CONSTRUCTION DETAIL
D-54
SOD INSTALLATION

APRIL 2016
NOT TO SCALE

NUMBER
56-

GDOT Georgia Department of Transportation | P. I. No.

OUTLET TO FLAT AREA

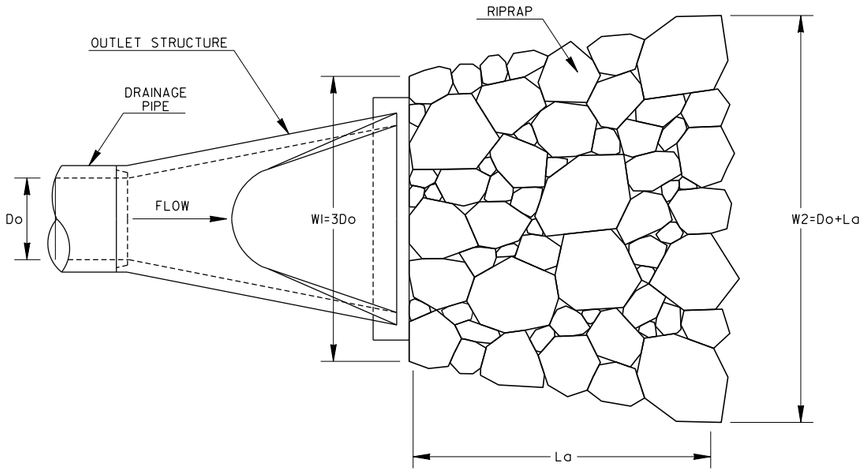

PLAN VIEW

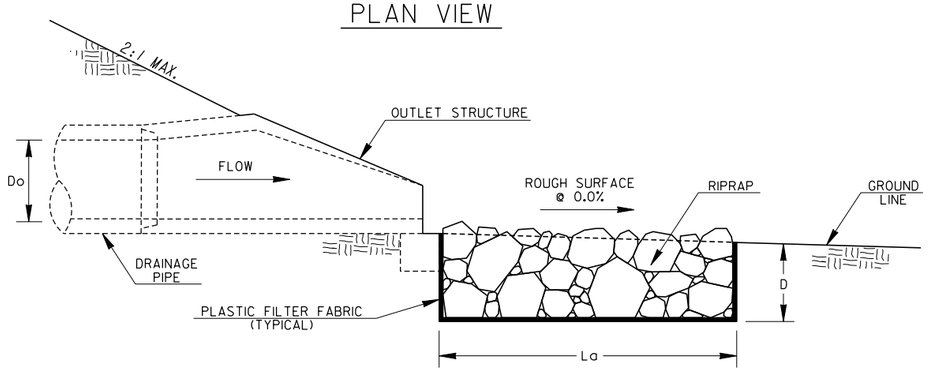

PROFILE VIEW

OUTLET PERPENDICULAR TO WELL-DEFINED CHANNEL

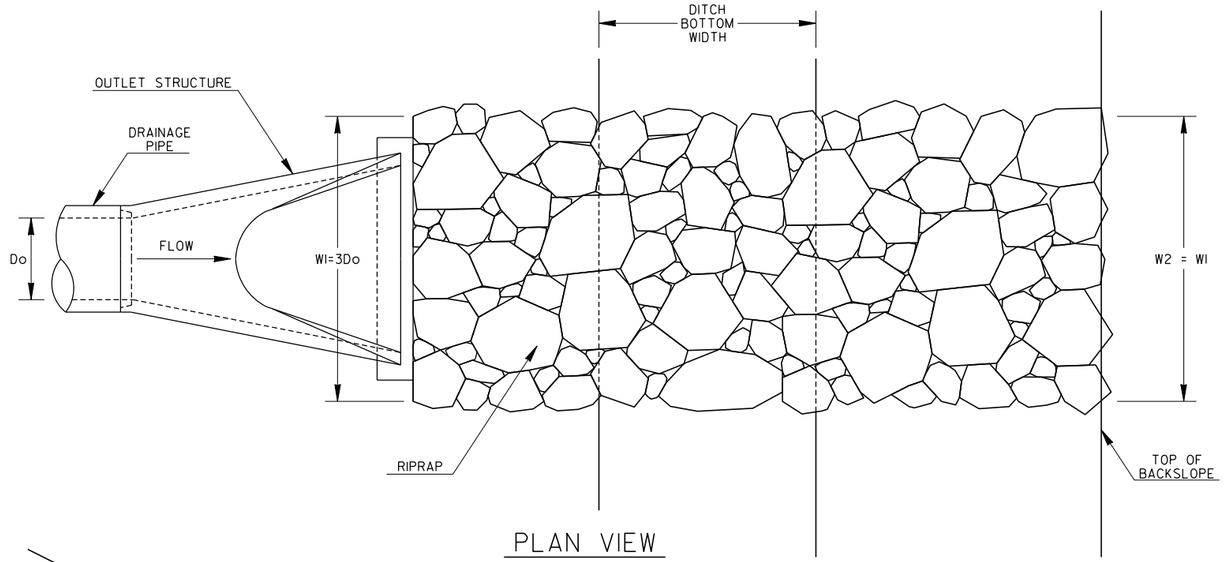

PLAN VIEW

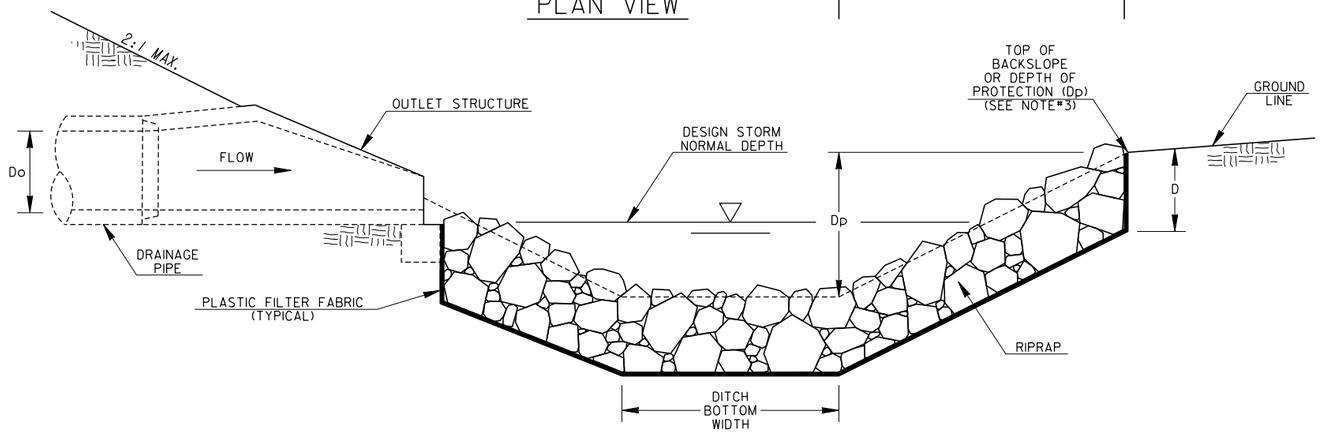

PROFILE VIEW

GENERAL NOTES:

1. RIPRAP OUTLET PROTECTION SHOULD BE USED TO REDUCE A DRAINAGE STRUCTURE'S DISCHARGE VELOCITY.
   RIPRAP OUTLET PROTECTION IS SHOWN FOR GEORGIA STANDARD 1120, BUT IS INSTALLED SIMILARLY FOR OTHER DRAINAGE OUTLET STRUCTURES.

2. RIPRAP OUTLET PROTECTION SHALL BE DESIGNED IN ACCORDANCE WITH THE "MANUAL FOR EROSION AND SEDIMENT CONTROL IN GEORGIA".
   THE DESIGNER SHALL PROVIDE THE FOLLOWING IN THE PLANS: PIPE DIAMETER (Do), FLOW RATE OF DESIGN STORM (Q), VELOCITY (V), TAILWATER CONDITION (Tw), APRON LENGTH (La), APRON WIDTH AT DRAINAGE STRUCTURE (WI), APRON WIDTH DOWNSTREAM (W2), AVERAGE STONE DIAMETER (d50), INSTALLATION DEPTH (D), AND TYPE OF RIPRAP WITH QUANTITY.

   THE MINIMUM DESIGN FOR RIPRAP OUTLET PROTECTION SHALL BE THE 25-YEAR STORM EVENT, BUT LARGER STORMS ARE RECOMMENDED.

3. THE APRON WIDTHS SHALL BE THE SAME WHEN THE DRAINAGE STRUCTURE DISCHARGES PERPENDICULAR INTO A WELL-DEFINED CHANNEL.
   THE LENGTH SHALL EXTEND ACROSS THE CHANNEL AND UP TO THE TOP OF THE CHANNEL BACKSLOPE OR 1-FOOT ABOVE THE NORMAL DEPTH OF THE CHANNEL'S DESIGN STORM (WHICHEVER IS LESS). THE DESIGNER SHALL PROVIDE THE DEPTH OF PROTECTION (Dp) IF THE APRON DOES NOT EXTEND TO THE TOP OF THE BACKSLOPE.

4. IF THE OUTLET HYDRAULICS REQUIRE A d50<=0.70 FEET, TYPE-3 RIPRAP MAY BE USED.
   IF THE OUTLET HYDRAULICS REQUIRE A d50<=1.20 FEET, TYPE-1 RIPRAP SHOULD BE USED.
   IF THE OUTLET HYDRAULICS REQUIRE A d50>1.20 FEET, THE DESIGNER SHALL DESIGN AND PROVIDE A SPECIAL DETAIL FOR APPROPRIATE OUTLET PROTECTION.

5. PLASTIC FILTER FABRIC IS REQUIRED UNDERNEATH RIPRAP APRON.

6. PAYMENT FOR RIPRAP SHALL BE MEASURED IN SQUARE YARDS FOR SPECIFIED INSTALLATION DEPTH. PAYMENT FOR PLASTIC FILTER FABRIC SHALL BE MEASURED IN SQUARE YARDS CONSISTENT WITH RIPRAP QUANTITY AND PAID FOR SEPARATELY.

Do = PIPE DIAMETER
Q = DESIGN STORM FLOW RATE
V = DESIGN STORM VELOCITY
Tw = TAILWATER CONDITION/DESIGN STORM NORMAL DEPTH
La = APRON LENGTH
WI = APRON WIDTH UPSTREAM
W2 = APRON WIDTH DOWNSTREAM
d50 = AVERAGE STONE DIAMETER
D = INSTALLATION DEPTH
Dp = DEPTH OF PROTECTION

RIPRAP TYPE	REQUIRED d50 (FT)	MIN. DEPTH "D" (IN)
1	≤1.20	36
3	≤0.67	18

BY	DATE	REVISION
PN	07-01-26	ADDED 56-_____ DRWG. NO.

DEPARTMENT OF TRANSPORTATION
STATE OF GEORGIA

CONSTRUCTION DETAIL D-55A
RIPRAP OUTLET PROTECTION (SHEET 1 OF 2)

APRIL 2016
NOT TO SCALE

NUMBER 56-

GDOT Georgia Department of Transportation | P. I. No.

OUTLET PARALLEL TO WELL-DEFINED CHANNEL

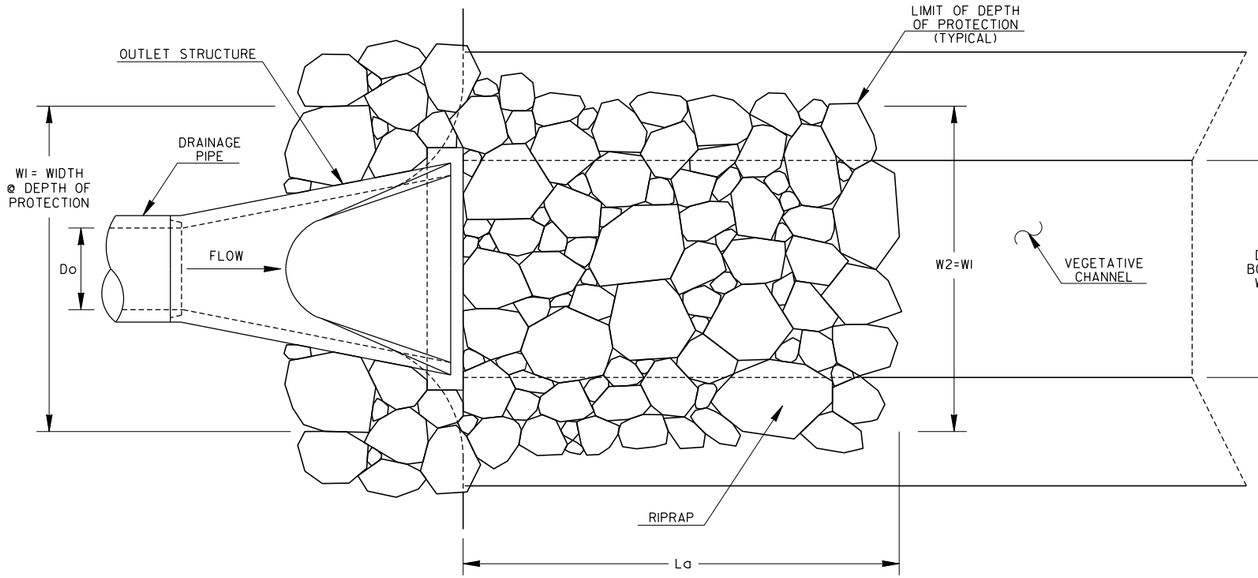

PLAN VIEW

CONCRETE CHANNEL TO RIPRAP TRANSITION

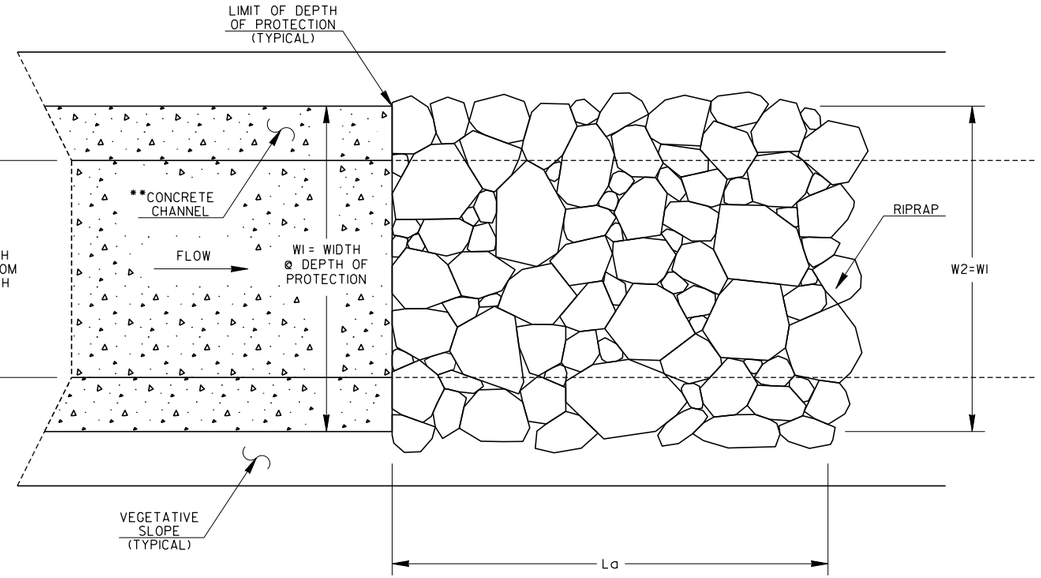

**REFER TO CONSTRUCTION DETAIL D-10 FOR CONCRETE DITCH PAVING INFORMATION

PLAN VIEW

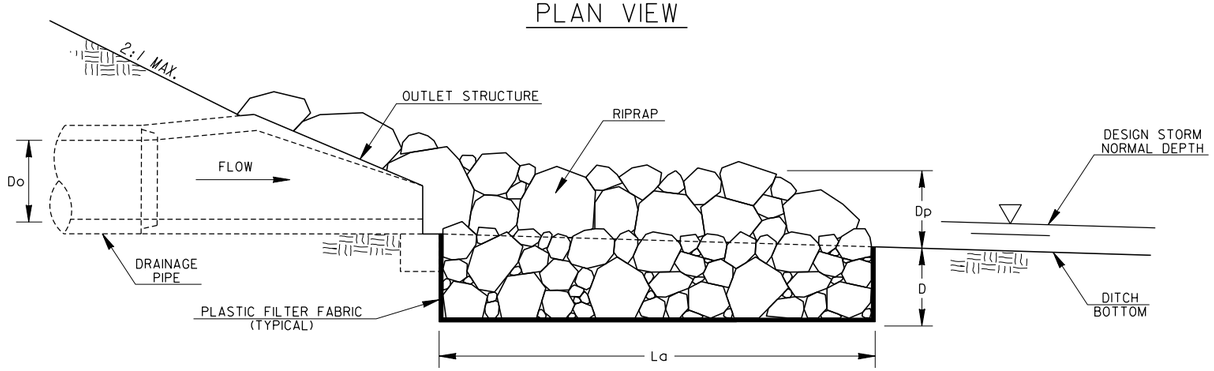

PROFILE VIEW

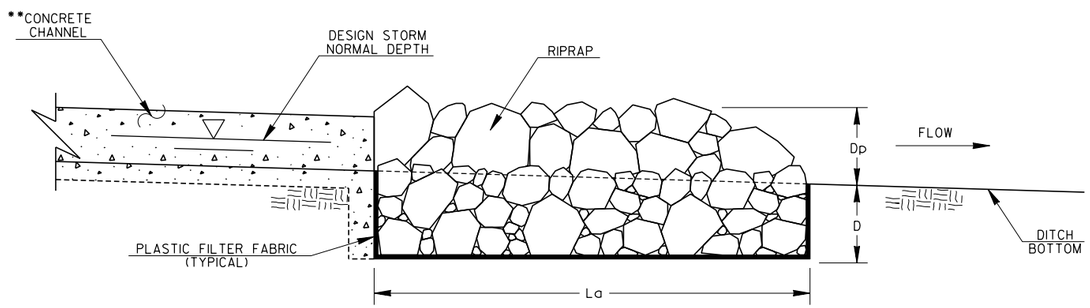

PROFILE VIEW

GENERAL NOTES:

1. RIPRAP OUTLET PROTECTION SHOULD BE USED TO REDUCE A DRAINAGE STRUCTURE'S DISCHARGE VELOCITY.
   RIPRAP OUTLET PROTECTION IS SHOWN FOR GEORGIA STANDARD 1120, BUT IS INSTALLED SIMILARLY FOR OTHER DRAINAGE OUTLET STRUCTURES.
   RIPRAP OUTLET PROTECTION IS SHOWN FOR A CONCRETE DITCH, BUT IS INSTALLED SIMILARLY TO TRANSITION FROM OTHER CHANNEL LININGS.

2. RIPRAP OUTLET PROTECTION SHALL BE DESIGNED IN ACCORDANCE WITH THE "MANUAL FOR EROSION AND SEDIMENT CONTROL IN GEORGIA". THE DESIGNER SHALL PROVIDE THE FOLLOWING IN THE PLANS: PIPE DIAMETER (Do), FLOW RATE OF DESIGN STORM (Q), VELOCITY (V), TAILWATER CONDITION (Tw), APRON LENGTH (La), APRON WIDTH AT DRAINAGE STRUCTURE (WI), APRON WIDTH DOWNSTREAM (W2), AVERAGE STONE DIAMETER (d50), INSTALLATION DEPTH (D), AND TYPE OF RIPRAP WITH QUANTITY.

   THE MINIMUM DESIGN FOR RIPRAP OUTLET PROTECTION SHALL BE THE 25-YEAR STORM EVENT, BUT LARGER STORMS ARE RECOMMENDED.

3. THE APRON WIDTHS SHALL BE THE SAME WHEN THE DRAINAGE STRUCTURE DISCHARGES PARALLEL INTO A WELL-DEFINED CHANNEL. THE APRON WIDTHS IN THIS CASE SHALL REPRESENT THE WIDTH AT THE DEPTH OF PROTECTION. THE RIPRAP SHALL BE INSTALLED TO THE TOP OF CHANNEL OR 1-FOOT ABOVE THE NORMAL DEPTH OF THE CHANNEL'S DESIGN STORM (WHICHEVER IS LESS). THE DESIGNER SHALL PROVIDE THE DEPTH OF PROTECTION (Dp) IF THE RIPRAP SHOULD NOT BE INSTALLED TO THE TOP OF THE CHANNEL. RIPRAP SHOULD ALSO BE INSTALLED TO ARMOR CHANNEL CORNER AT THE OUTLET STRUCTURE.

4. IF THE OUTLET HYDRAULICS REQUIRE A d50<=0.70 FEET, TYPE-3 RIPRAP MAY BE USED.
   IF THE OUTLET HYDRAULICS REQUIRE A d50<=1.20 FEET, TYPE-1 RIPRAP SHOULD BE USED.
   IF THE OUTLET HYDRAULICS REQUIRE A d50>1.20 FEET, THE DESIGNER SHALL DESIGN AND PROVIDE A SPECIAL DETAIL FOR APPROPRIATE OUTLET PROTECTION.

5. PLASTIC FILTER FABRIC IS REQUIRED UNDERNEATH RIPRAP APRON.

6. PAYMENT FOR RIPRAP SHALL BE MEASURED IN SQUARE YARDS FOR SPECIFIED INSTALLATION DEPTH. PAYMENT FOR PLASTIC FILTER FABRIC SHALL BE MEASURED IN SQUARE YARDS CONSISTENT WITH RIPRAP QUANTITY AND PAID FOR SEPARATELY.

Do = PIPE DIAMETER
Q = DESIGN STORM FLOW RATE
V = DESIGN STORM VELOCITY
Tw = TAILWATER CONDITION/DESIGN STORM NORMAL DEPTH
La = APRON LENGTH
WI = APRON WIDTH UPSTREAM AT DEPTH OF PROTECTION
W2 = APRON WIDTH DOWNSTREAM AT DEPTH OF PROTECTION
d50 = AVERAGE STONE DIAMETER
D = INSTALLATION DEPTH
Dp = DEPTH OF PROTECTION

RIPRAP TYPE	REQUIRED d50 (FT)	MIN. DEPTH "D" (IN)
1	≤1.20	36
3	≤0.67	18

DATE	DRWG. NO. / REVISION	BY
07-01-26	ADDED 56-_____	PN

DEPARTMENT OF TRANSPORTATION
STATE OF GEORGIA

CONSTRUCTION DETAIL D-55B
RIPRAP OUTLET PROTECTION (SHEET 2 OF 2)

APRIL 2016
NOT TO SCALE

NUMBER 56-

GDOT Georgia Department of Transportation | P. I. No.

STONE CHECK DAM

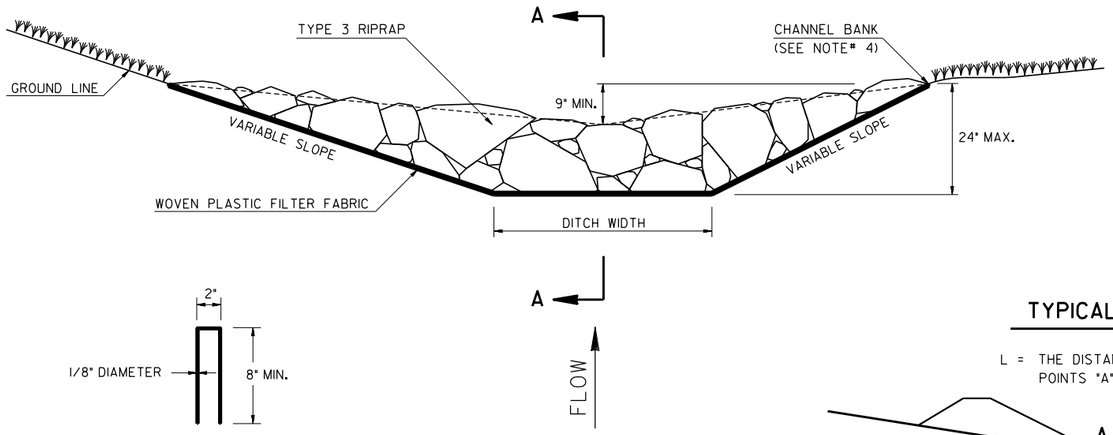

METAL FILTER FABRIC STAPLE

SAND BAG CHECK DAM

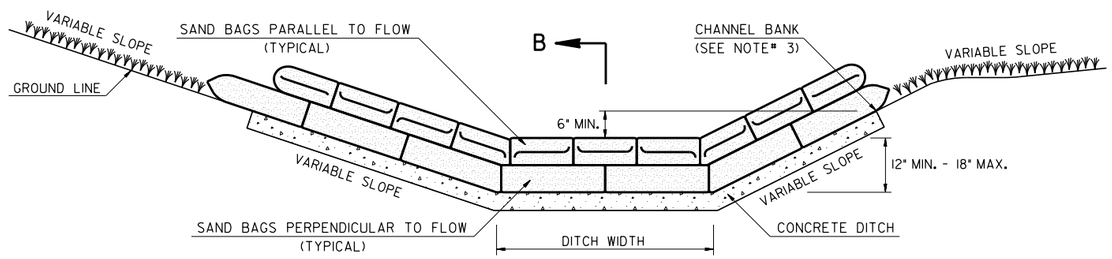

TYPICAL CHECK DAM SPACING

L = THE DISTANCE BETWEEN CHECK DAMS SUCH THAT POINTS "A" AND "B" ARE OF EQUAL ELEVATION

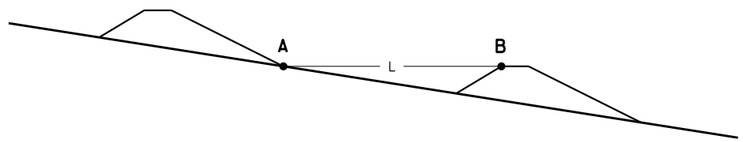

SAND BAG DIMENSIONS

(SEE NOTE# 6)

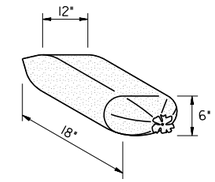

SECTION A-A

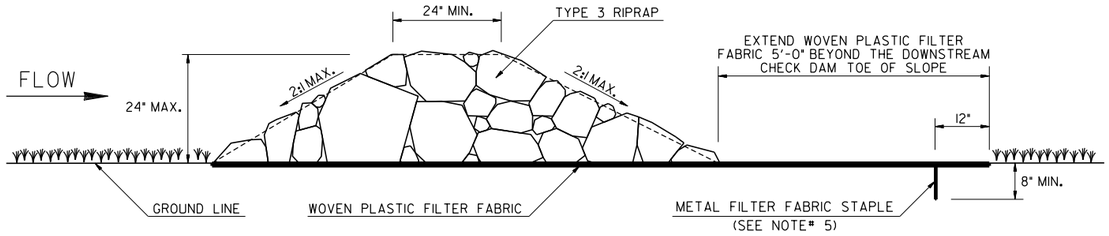

SECTION B-B

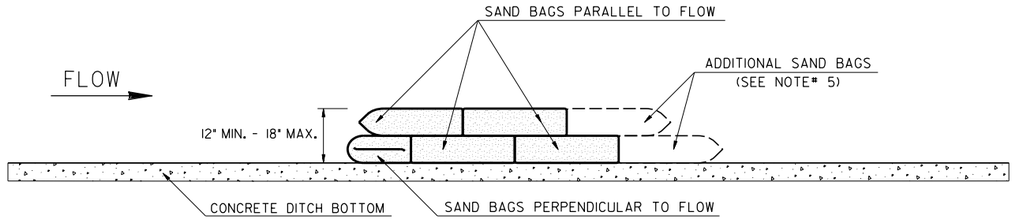

STONE CHECK DAM GENERAL NOTES:

1. STONE CHECK DAMS SHALL NOT BE INSTALLED IN THE CLEAR ZONE OF UNPROTECTED ACTIVE TRAFFIC.
2. APPROPRIATE CONVENTIONAL OR APPROVED ALTERNATIVE BMPs SHALL BE PROVIDED DOWNSTREAM OF STONE CHECK DAMS AT THE DISCHARGE POINT FOR FLOWS GREATER THAN 2.0-CUBIC FEET PER SECOND.
3. STONE CHECK DAMS SHALL NOT BE PLACED WITHIN FLOWING STATE WATERS.
4. THE CENTER OF THE STONE CHECK DAM SHALL BE AT LEAST 9-INCHES LOWER THAN THE OUTER EDGES OF THE STONE CHECK DAM. THE HEIGHT AT THE CENTER OF THE STONE CHECK DAM MAY BE INCREASED TO A MAXIMUM OF 24-INCHES IF A MINIMUM OF 9-INCHES OF FREEBOARD IS STILL PROVIDED AT THE CHANNEL BANK.
5. ANCHOR THE WOVEN PLASTIC FILTER FABRIC TO THE GROUND SURFACE WITH METAL FILTER FABRIC STAPLES 12-INCHES FROM THE EDGE AND NO GREATER THAN 12-INCHES APART.
6. REMOVE SEDIMENT WHEN IT REACHES ONE-HALF THE HEIGHT OF THE STONE CHECK DAM. WOVEN PLASTIC FILTER FABRIC SHALL BE REPLACED WHEN DAMAGED OR DETERIORATED.
7. PROVIDE PERMANENT CHANNEL PROTECTION AS SHOWN AND/OR NOTED IN THE PLANS AFTER STONE CHECK DAM IS REMOVED.

SAND BAG CHECK DAM GENERAL NOTES:

1. SAND BAG CHECK DAMS ARE ONLY USED FOR TEMPORARY VELOCITY CONTROL IN CONCRETE LINED DITCHES AND SHALL NOT BE INSTALLED IN THE CLEAR ZONE OF UNPROTECTED ACTIVE TRAFFIC.
2. APPROPRIATE CONVENTIONAL OR APPROVED ALTERNATIVE BMPs SHALL BE PROVIDED UPSTREAM AND/OR DOWNSTREAM OF CONCRETE DITCHES.
3. THE CENTER OF THE SAND BAG CHECK DAM SHALL BE AT LEAST 6-INCHES LOWER THAN THE OUTER EDGES OF THE SAND BAG CHECK DAM AT THE GROUND LINE. THE HEIGHT AT THE CENTER OF THE SAND BAG CHECK DAM SHALL BE A MINIMUM OF 12-INCHES AND A MAXIMUM OF 18-INCHES.
4. INSTALL SAND BAGS TIGHTLY ABUTTING EACH OTHER AND STACK IN A RUNNING BOND PATTERN. FOLD ANY FLAPS AWAY FROM WATER FLOW.
5. IF ADDITIONAL SAND BAGS ARE WARRANTED FOR STABILITY, INSTALL AS SHOWN AND DIRECTED BY THE ENGINEER AT NO ADDITIONAL COST.
6. SAND BAG SIZES MAY VARY. ASSUME A FILLED SAND BAG HAS APPROXIMATE DIMENSIONS OF 12"W×6"H×18"L.
7. REMOVE SEDIMENT WHEN IT REACHES ONE-HALF THE HEIGHT OF THE SAND BAG CHECK DAM. SAND BAGS SHALL BE REPLACED WHEN DAMAGED OR DETERIORATED AT NO ADDITIONAL COST TO THE DEPARTMENT.

NOTE:

GSWCC EQUIVALENT BMPS ARE AVAILABLE IN THE EQUIVALENT BMP LIST ON THE GSWCC DOCUMENT LIST PAGE AND MAY BE USED IN PLACE OF STANDARD BMPS SHOWN ON THE LEGEND WITH A GDOT ACCEPTANCE LETTER OR WHEN LISTED ON GDOT'S QPL.

SEE STANDARD SPECIFICATION 163, AND SUPPLEMENTS THERETO FOR THE CONSTRUCTION AND REMOVAL OF STONE CHECK DAMS AND SAND BAG CHECK DAMS. SEE STANDARD SPECIFICATION 165, AND SUPPLEMENTS THERETO FOR THE MAINTENANCE OF STONE CHECK DAMS AND SAND BAG CHECK DAMS.

PAY ITEMS:

163-0527 CONSTRUCT AND REMOVE RIPRAP CHECK DAMS, STONE PLAIN RIPRAP/SAND BAGS (EA)
165-0041 MAINTENANCE OF CHECK DAMS - ALL TYPES (LF)

BY	REVISION	DATE
PJN	ADDED 56-____ DRWG. NO.	07-01-26
	ADDED EQUIV. BMP NOTE	

DEPARTMENT OF TRANSPORTATION
STATE OF GEORGIA

CONSTRUCTION DETAIL D-56

STONE RIPRAP & SAND BAG TEMPORARY CHECK DAMS

NOVEMBER 2018
NOT TO SCALE

NUMBER 56-

CODE	PRACTICE STD OR DETAIL SPEC. SECT.	DETAIL	DESCRIPTION
	ORANGE BARRIER FENCE	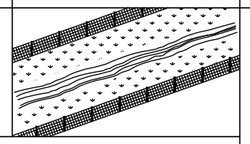	ORANGE BARRIER FENCE DELINEATES ENVIRONMENTALLY SENSITIVE AREAS WHERE THE CONTRACTOR SHALL NOT CLEAR, GRUB, OR PLACE CONSTRUCTION MATERIALS OR EQUIPMENT WITHIN THIS AREA.
		LINE CODE  ORANGE BARRIER FENCE	
ESA	ENVIRONMENTALLY SENSITIVE AREA	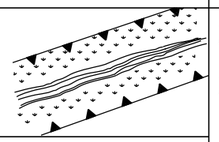	AN ENVIRONMENTALLY SENSITIVE AREA (ESA) CONTAINS RESOURCES THAT ARE ENVIRONMENTALLY, CULTURALLY, OR HISTORICALLY SENSITIVE. ESAs INCLUDE, BUT ARE NOT LIMITED TO: STATE WATER BUFFERS, HISTORIC SITES, ARCHAEOLOGICAL SITES, AND PROTECTED ANIMAL AND PLANT SPECIES HABITATS. IF WORK IS AUTHORIZED IN THIS AREA, THE WORK MUST BE PERFORMED IN ACCORDANCE WITH SECTION 107 AND ANY OTHER APPLICABLE SPECIAL PROVISIONS AND APPLICABLE PLAN NOTES.
		LINE CODE ESA-25'(OR 50')STREAM BUFFER, ETC.	
Bf	BUFFER ZONE	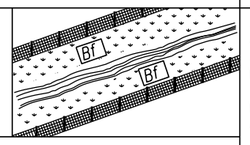	A STRIP OF UNDISTURBED ORIGINAL VEGETATION, ENHANCED OR RESTORED EXISTING VEGETATION, OR THE RE-ESTABLISHMENT OF VEGETATION SURROUNDING AN AREA OF DISTURBANCE OR BORDERING STREAMS, PONDS, WETLANDS, LAKES, AND COASTAL WATERS. WHEN NECESSARY, BUFFER ZONES ARE TO BE PROTECTED BY ORANGE BARRIER FENCE.
		SYMBOL Bf	
Ds1	MULCH SECTION 163	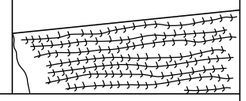	THIS IS AN APPLICATION OF STRAW MULCH USED TO REDUCE SOIL EROSION AND STABILIZE THE SOIL. IT IS USED TO CONTROL EROSION IN AREAS WHERE PERMANENT VEGETATION IS OUT OF SEASON OR TO TEMPORARILY STABILIZE AREAS PRIOR TO FINAL GRADING. MULCHING REQUIREMENTS ARE ADDRESSED BY STANDARD SPECIFICATIONS AND/OR THE PROJECT ENGINEER. THE BMP SYMBOL FOR APPLICABLE AREAS AND/OR A NOTE SHALL BE INCLUDED ON APPLICABLE SHEETS IN SECTION 54.
		SYMBOL Ds1	
Ds2	TEMPORARY GRASSING SECTION 163, 700		THE SOWING OF A QUICK GROWING SPECIES OF GRASS SUITABLE TO THE AREA AND SEASON. IT IS TYPICALLY USED TO CONTROL EROSION IN AREAS LONGER THAN MULCHING IS EXPECTED TO LAST. TEMPORARY GRASSING SHOULD BE USED ON ALL PROJECTS ACCORDING TO THE STANDARD SPECIFICATIONS. THE BMP SYMBOL FOR APPLICABLE AREAS AND/OR A NOTE SHALL BE INCLUDED ON APPLICABLE SHEETS IN SECTION 54.
		SYMBOL Ds2	

CODE	PRACTICE STD OR DETAIL SPEC. SECT.	DETAIL	DESCRIPTION
Ds3	PERMANENT GRASSING SECTION 700		THE SOWING OF PERMANENT VEGETATION, SUCH AS GRASS, SUITABLE TO THE AREA AND SEASON. PERMANENT VEGETATION SHALL BE USED ON ALL PROJECTS ACCORDING TO THE STANDARD SPECIFICATION. THE BMP SYMBOL FOR APPLICABLE AREAS AND/OR A NOTE SHALL BE INCLUDED ON APPLICABLE SHEETS IN SECTION 54.
		SYMBOL Ds3	
Ds4	SODDING CONSTRUCTION DETAIL D-54 SECTION 700, 890	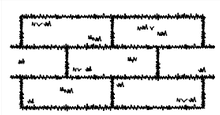	THE INSTALLATION OF A SPECIES OF GRASS SODDING SUITABLE TO THE AREA AND SEASON TO PROVIDE IMMEDIATE PERMANENT VEGETATION. SODDING MAY BE SHOWN FOR HIGHLY SENSITIVE AREAS, TO IMPROVE AESTHETICS, OR FOR SPECIAL PLANTING REQUIREMENTS ON THE BASIS OF ENVIRONMENTAL COMMITMENTS OR LANDSCAPING REQUIREMENTS. THE BMP PATTERN FOR APPLICABLE AREAS AND/OR A NOTE SHALL BE INCLUDED ON APPLICABLE SHEETS IN SECTION 54.
		PATTERN 	
Fl-Co	FLOCCULANTS COAGULANTS SECTION 163, 700, 895	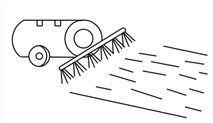	FLOCCULANTS AND COAGULANTS ARE USED TO SETTLE SUSPENDED SEDIMENT, HEAVY METALS, AND HYDROCARBONS (TSS) IN SLOW MOVING RUNOFF FROM CONSTRUCTION SITES FOR WATER CLARIFICATION. ANIONIC POLYACRYLAMIDES (PAM) MAY BE USED IN CONJUNCTION WITH BMPs WITHIN CHANNELS UPSTREAM OF A POST-CONSTRUCTION POND, TEMPORARY SEDIMENT BASIN, OR TEMPORARY SEDIMENT TRAP. FLOCCULANTS SHALL NOT BE USED DOWNSTREAM OF AFOREMENTIONED BMPs! FLOCCULANTS/COAGULANTS ARE TO BE SHOWN ON PLANS WITH APPLICABLE BMP IF NEEDED. PAYMENT FOR PAM AS A FLOCCULANT WILL BE INCLUDED IN THE PRICE FOR THE INSTALLATION AND/OR MAINTENANCE OF THE BMP IT IS USED IN CONJUNCTION WITH. NO SEPARATE PAYMENT WILL BE MADE.
		SYMBOL Fl-Co POLYACRYLAMIDE	
Sb	STREAMBANK STABILIZATION SECTION 702	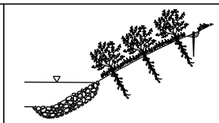	STREAMBANK STABILIZATION IS THE USE OF READILY AVAILABLE NATIVE PLANT MATERIALS TO MAINTAIN AND ENHANCE STREAMBANKS, OR TO PREVENT, OR RESTORE AND REPAIR SMALL STREAMBANK EROSION PROBLEMS. STREAMBANK STABILIZATION AREAS SHOULD BE SHOWN ON THE PLANS WHEN APPLICABLE TO THE PROJECT. REFER TO THE PROJECT'S STREAM AND STREAM BUFFER MITIGATION PLANS FOR PLANT SPECIES, LOCATIONS, AND OTHER PLANTING DETAILS.
		PATTERN 	

NOTE:

1. DO NOT USE EROSION CONTROL ITEMS IN A FLOWING STREAM OR IN A TIDAL AREA BELOW HIGH TIDE.
2. FOR ADDITIONAL INFORMATION ON THE DESIGN AND APPLICATION OF EROSION AND SEDIMENT CONTROL BEST MANAGEMENT PRACTICES (BMPs), REFER TO THE LATEST EDITION OF THE GEORGIA SOIL AND WATER CONSERVATION COMMISSION'S, "MANUAL FOR EROSION AND SEDIMENT CONTROL IN GEORGIA".
3. GSWCC EQUIVALENT BMPS ARE AVAILABLE IN THE EQUIVALENT BMP LIST ON THE GSWCC DOCUMENT LIST PAGE AND MAY BE USED IN PLACE OF STANDARD BMPS SHOWN ON THE LEGEND WITH A GDOT ACCEPTANCE LETTER OR WHEN LISTED ON GDOT'S OPL.

GDOT Georgia Department of Transportation

NOT TO SCALE

REVISION DATES
03/02/2017
07/01/2026

EROSION CONTROL LEGEND
UNIFORM CODE SHEET
SHEET 1 OF 7

CHECKED:	D. EAGLETON	DATE:	01/01/16	DRAWING No.
BACKCHECKED:		DATE:		52-0001
CORRECTED:		DATE:		
VERIFIED:		DATE:		

CODE	PRACTICE STD OR DETAIL SPEC. SECT.	DETAIL	DESCRIPTION
Ss	SLOPE STABILIZATION CONSTRUCTION DETAIL D-35 SECTION 716		SLOPE STABILIZATION (EROSION CONTROL MATTING) IS A PROTECTIVE COVERING USED TO PREVENT EROSION AND ESTABLISH TEMPORARY OR PERMANENT VEGETATION ON STEEP SLOPES, SHORE LINES, OR CHANNELS. SLOPE STABILIZATION MAY BE A ROLLED EROSION CONTROL PRODUCT (RECP) OR A HYDRAULIC EROSION CONTROL PRODUCT (HECP). SLOPE STABILIZATION SHALL BE USED ON ALL CUT OR FILL SLOPES OF 2.5:1 OR STEEPER AND WITHIN 50 FEET OF ALL CROSS DRAINS AND CULVERTS. NOTE: ONLY COCONUT FIBER BLANKET OR WOOD FIBER BLANKET SHALL BE USED AS SLOPE STABILIZATION WITHIN BUFFERED AREAS.
	PATTERN 		
Tac	TACKIFIERS SECTION 163, 700, 895	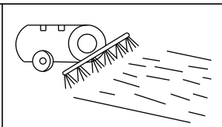	TACKIFIERS HYDRATE IN WATER AND READILY BLEND WITH OTHER SLURRY MATERIALS AND ARE USED TO TIE-DOWN FOR SOIL, COMPOST, SEED, STRAW, HAY OR MULCH. TACKIFIERS REQUIREMENTS, SUCH AS ANIONIC POLYACRYLAMIDES (PAM) ARE ADDRESSED BY STANDARD SPECIFICATIONS AND ARE NOT TYPICALLY SHOWN ON THE PLANS. PAM IS TYPICALLY USED BY THE CONTRACTOR FOR TEMPORARY OR PERMANENT GRASSING. REFER TO THE LATEST EDITION OF THE "MANUAL FOR EROSION AND SEDIMENT CONTROL IN GEORGIA" FOR CRITERIA.
	SYMBOL Tac POLYACRYLAMIDE		
Cd-F	FABRIC CHECK DAM CONSTRUCTION DETAIL D-24D SECTION 171	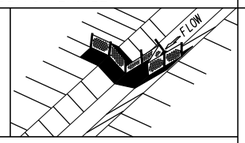	A CHECK DAM COMPOSED OF SYNTHETIC FIBER FABRIC, WIRE REINFORCED, POST, OVERFLOW WEIR, AND TURF REINFORCEMENT MATTING (TRM) SPLASHPAD PLACED IN DITCHES IN A SPECIAL CONFIGURATION WHICH CONTROLS ENERGY DISSIPATION AND FILTRATION OF STORM WATER. SEE CONSTRUCTION DETAIL D-24D FOR ADDITIONAL INFORMATION AND SPACING REQUIREMENTS. THIS ITEM IS SUITABLE FOR USE IN ROADSIDE DITCHES THAT ARE PART OF INFRASTRUCTURE CONSTRUCTION PROJECTS AND WITHIN THE CLEAR ZONE. IF THIS ITEM IS USED IN AN AREA WITH FLOWS GREATER THAN 2.0-CFS OR WITHOUT A SEDIMENT BASIN, A MINIMUM OF ONE ROCK FILTER DAM SHALL BE USED AT THE DOWNSTREAM DISCHARGE POINT. Cd-S EQUIVALENT BMPS MEETING NOTE 3, WHICH ARE COMPRISED OF STAKED FABRIC AND OTHER FABRIC PRODUCTS, MAY BE USED IN PLACE OF Cd-F.
	SYMBOL Cd-F		
Cd-Fs	COMPOST FILTER SOCK CHECK DAM CONSTRUCTION DETAIL D-52 SECTION 163	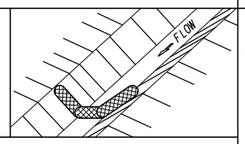	A COMPOST FILTER SOCK CHECK DAM IS COMPOSED OF A PHOTODEGRADABLE OR BIODEGRADABLE KNITTED MESH MATERIAL CONTAINING A WEED FREE FILLER MATERIAL DERIVED FROM A WELL-DECOMPOSED SOURCE OF ORGANIC MATTER. THEY SHALL BE PROPERLY STAKED FOR DITCH APPLICATIONS. REFER TO THE LATEST EDITION OF THE "MANUAL FOR EROSION AND SEDIMENT CONTROL IN GEORGIA" FOR MATERIAL SPECIFICATIONS. IF THIS ITEM IS USED IN AN AREA WITH FLOWS GREATER THAN 2.0-CFS OR WITHOUT A SEDIMENT BASIN, A MINIMUM OF ONE ROCK FILTER DAM SHALL BE USED AT THE DOWNSTREAM DISCHARGE POINT.
	SYMBOL Cd-Fs		
Cd-Hb	BALED STRAW CHECK DAM CONSTRUCTION DETAIL D-52 SECTION 163	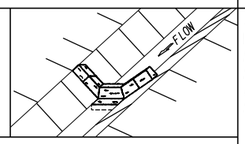	A BALE STRAW CHECK DAM IS COMPOSED OF BALES PREFERABLY BOUND WITH WIRE OR NYLON INSTEAD OF TWINE. BALES SHOULD BE PLACED IN ROWS WITH BALE ENDS TIGHTLY ABUTTING ADJACENT BALES. THE DOWNSTREAM ROW OF BALES SHALL BE PLACED IN A TRENCH TO ALLOW THE TOP OF THE BALE'S LONG, WIDE SIDE TO BE LEVEL WITH THE GROUND AS A NON-ERODIBLE SPLASH PAD. PROPER STAKING IS ALSO REQUIRED FOR DITCH APPLICATIONS. IF THIS ITEM IS USED IN AN AREA WITH FLOWS GREATER THAN 2.0-CFS OR WITHOUT A SEDIMENT BASIN, A MINIMUM OF ONE ROCK FILTER DAM SHALL BE USED AT THE DOWNSTREAM DISCHARGE POINT.
	SYMBOL Cd-Hb		

CODE	PRACTICE STD OR DETAIL SPEC. SECT.	DETAIL	DESCRIPTION
Cd-S	STONE CHECK DAM OR SANDBAG CHECK DAM CONSTRUCTION DETAIL D-56 SECTION 163, 603	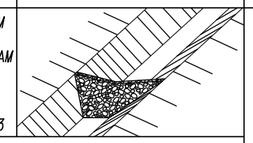	STONE CHECK DAMS ARE CONSTRUCTED OF TYPE-3 RIP-RAP WITH GEOTEXTILE UNDERLINER. STONE CHECK DAMS ARE PREFERRED IN ROADWAY DITCHES OUTSIDE THE CLEAR ZONE. CONSIDERATION SHOULD BE GIVEN TO USING OTHER APPROPRIATE CHECK DAMS AND/OR BMPs WITHIN THE CLEAR ZONE. ONLY USE SANDBAG CHECK DAMS FOR TEMPORARY VELOCITY CONTROL IN CONCRETE LINED CHANNELS. ENSURE DISCHARGE POINT IS PROPERLY STABILIZED AND INCLUDE APPROPRIATE BMPS FOR SEDIMENT STORAGE UPSTREAM AND/OR DOWNSTREAM OF CONCRETE LINED CHANNELS. IF THIS ITEM IS USED IN AN AREA WITH FLOWS GREATER THAN 2.0-CFS OR WITHOUT A SEDIMENT BASIN, A MINIMUM OF ONE ROCK FILTER DAM SHALL BE USED AT THE DOWNSTREAM DISCHARGE POINT.
	SYMBOL Cd-S		
Ch-1	VEGETATED CHANNEL STABILIZATION SECTION 700	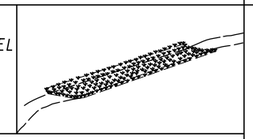	A NEW OR EXISTING CHANNEL MAY BE LINED WITH PERMANENT VEGETATION ONLY FOR VELOCITIES UP TO 5.0 fps. THIS MEASURE SHALL BE DESIGNED IN ACCORDANCE WITH THE GDOT CHANNEL LINING DESIGN PROGRAM. ADDITIONAL EROSION CONTROL MEASURES MAY BE REQUIRED. TYPICALLY NOT SHOWN IN PLANS.
	LINE CODE 		
Ch-2R1	CHANNEL STABILIZATION RIP-RAP, TYPE 1 CONSTRUCTION DETAIL D-49 SECTION 603	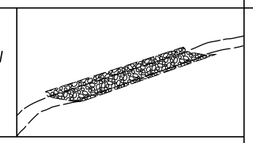	THIS ITEM CONSISTS OF LINING A CHANNEL WITH TYPE 1 RIP-RAP 24" THICK (UNLESS SPECIFIED OTHERWISE) PLACED ON TOP OF A GEOTEXTILE UNDERLINER. THE RIP-RAP SHALL PROTECT THE CHANNEL FLOWING TO A DEPTH "Dp" RECOMMENDED BY THE GDOT CHANNEL LINING PROGRAM. ADDITIONAL EROSION CONTROL MEASURES MAY BE REQUIRED. "Dp" SHALL BE IDENTIFIED IN A TABLE LOCATED ON THE SUMMARY OF QUANTITIES SHEETS AND IN THE EROSION, SEDIMENTATION, AND POLLUTION CONTROL PLAN.
	LINE CODE 		
Ch-2R3	CHANNEL STABILIZATION RIP-RAP, TYPE 3 CONSTRUCTION DETAIL D-49 SECTION 603	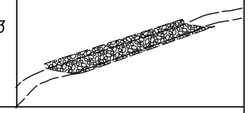	THIS ITEM CONSISTS OF LINING A CHANNEL WITH TYPE 3 RIP-RAP 24" THICK (UNLESS SPECIFIED OTHERWISE) PLACED ON TOP OF A GEOTEXTILE UNDERLINER. THE RIP-RAP SHALL PROTECT THE CHANNEL FLOWING TO A DEPTH "Dp" RECOMMENDED BY THE GDOT CHANNEL LINING PROGRAM. ADDITIONAL EROSION CONTROL MEASURES MAY BE REQUIRED. "Dp" SHALL BE IDENTIFIED IN A TABLE LOCATED ON THE SUMMARY OF QUANTITIES SHEETS AND IN THE EROSION, SEDIMENTATION, AND POLLUTION CONTROL PLAN.
	LINE CODE 		

NOTE:

1. DO NOT USE EROSION CONTROL ITEMS IN A FLOWING STREAM OR IN A TIDAL AREA BELOW HIGH TIDE.
2. FOR ADDITIONAL INFORMATION ON THE DESIGN AND APPLICATION OF EROSION AND SEDIMENT CONTROL BEST MANAGEMENT PRACTICES (BMPs), REFER TO THE LATEST EDITION OF THE GEORGIA SOIL AND WATER CONSERVATION COMMISSION'S, "MANUAL FOR EROSION AND SEDIMENT CONTROL IN GEORGIA".
3. GSWCC EQUIVALENT BMPS ARE AVAILABLE IN THE EQUIVALENT BMP LIST ON THE GSWCC DOCUMENT LIST PAGE AND MAY BE USED IN PLACE OF STANDARD BMPS SHOWN ON THE LEGEND WITH A GDOT ACCEPTANCE LETTER OR WHEN LISTED ON GDOT'S QPL.

GDOT Georgia Department of Transportation

NOT TO SCALE

REVISION DATES
03/02/2017
11/28/2018
07/01/2026

EROSION CONTROL LEGEND
UNIFORM CODE SHEET
SHEET 2 OF 7

CHECKED:	D. EAGLETON	DATE:	01/01/16	DRAWING No.
BACKCHECKED:		DATE:		52-0002
CORRECTED:		DATE:		
VERIFIED:		DATE:		

CODE	PRACTICE STD OR DETAIL SPEC. SECT.	DETAIL	DESCRIPTION
Ch-2T1	TURF REINFORCEMENT MAT (TRM) CONSTRUCTION DETAIL D-35 SECTION 711	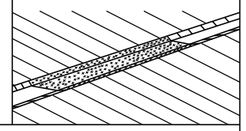 LINE CODE 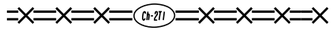	THIS THREE DIMENSIONAL EROSION CONTROL MAT IS USED IN CONJUNCTION WITH PERMANENT VEGETATION IN CHANNELS TO STABILIZE THE SOIL BY REINFORCING THE GRASS ROOTS TO PROVIDE LONG-TERM PROTECTION FOR SHEAR STRESSES 0-2 psf. THE TRM SHALL PROTECT THE CHANNEL FLOWING TO A DEPTH "Dp" RECOMMENDED BY THE GDOT CHANNEL LINING PROGRAM. "Dp" SHALL BE IDENTIFIED IN A TABLE LOCATED ON THE SUMMARY OF QUANTITIES SHEETS AND IN THE EROSION, SEDIMENTATION, AND POLLUTION CONTROL PLAN.
Ch-2T2	TURF REINFORCEMENT MAT (TRM) CONSTRUCTION DETAIL D-35 SECTION 711	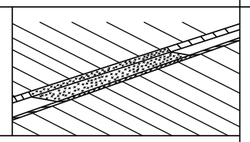 LINE CODE 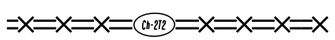	THIS THREE DIMENSIONAL EROSION CONTROL MAT IS USED IN CONJUNCTION WITH PERMANENT VEGETATION IN CHANNELS TO STABILIZE THE SOIL BY REINFORCING THE GRASS ROOTS TO PROVIDE LONG-TERM PROTECTION FOR SHEAR STRESSES 0-4 psf. THE TRM SHALL PROTECT THE CHANNEL FLOWING TO A DEPTH "Dp" RECOMMENDED BY THE GDOT CHANNEL LINING PROGRAM. "Dp" SHALL BE IDENTIFIED IN A TABLE LOCATED ON THE SUMMARY OF QUANTITIES SHEETS AND IN THE EROSION, SEDIMENTATION, AND POLLUTION CONTROL PLAN.
Ch-2T3	TURF REINFORCEMENT MAT (TRM) CONSTRUCTION DETAIL D-35 SECTION 711	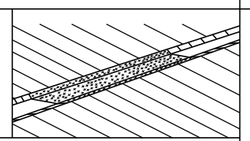 LINE CODE 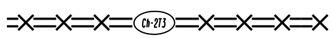	THIS THREE DIMENSIONAL EROSION CONTROL MAT IS USED IN CONJUNCTION WITH PERMANENT VEGETATION IN CHANNELS TO STABILIZE THE SOIL BY REINFORCING THE GRASS ROOTS TO PROVIDE LONG-TERM PROTECTION FOR SHEAR STRESSES 0-6 psf. THE TRM SHALL PROTECT THE CHANNEL FLOWING TO A DEPTH "Dp" RECOMMENDED BY THE GDOT CHANNEL LINING PROGRAM. "Dp" SHALL BE IDENTIFIED IN A TABLE LOCATED ON THE SUMMARY OF QUANTITIES SHEETS AND IN THE EROSION, SEDIMENTATION, AND POLLUTION CONTROL PLAN.
Ch-2T4	TURF REINFORCEMENT MAT (TRM) CONSTRUCTION DETAIL D-35 SECTION 711	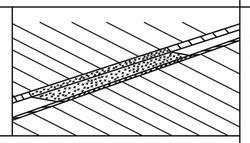 LINE CODE 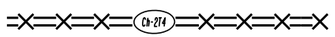	THIS THREE DIMENSIONAL EROSION CONTROL MAT IS USED IN CONJUNCTION WITH PERMANENT VEGETATION IN CHANNELS TO STABILIZE THE SOIL BY REINFORCING THE GRASS ROOTS TO PROVIDE LONG-TERM PROTECTION FOR SHEAR STRESSES 0-8 psf. THE TRM SHALL PROTECT THE CHANNEL FLOWING TO A DEPTH "Dp" RECOMMENDED BY THE GDOT CHANNEL LINING PROGRAM. "Dp" SHALL BE IDENTIFIED IN A TABLE LOCATED ON THE SUMMARY OF QUANTITIES SHEETS AND IN THE EROSION, SEDIMENTATION, AND POLLUTION CONTROL PLAN.
Ch-2T5	TURF REINFORCEMENT MAT (TRM) CONSTRUCTION DETAIL D-35 SECTION 711	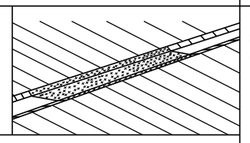 LINE CODE 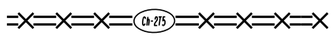	THIS THREE DIMENSIONAL EROSION CONTROL MAT IS USED IN CONJUNCTION WITH PERMANENT VEGETATION IN CHANNELS TO STABILIZE THE SOIL BY REINFORCING THE GRASS ROOTS TO PROVIDE LONG-TERM PROTECTION FOR SHEAR STRESSES 0-10 psf. THE TRM SHALL PROTECT THE CHANNEL FLOWING TO A DEPTH "Dp" RECOMMENDED BY THE GDOT CHANNEL LINING PROGRAM. "Dp" SHALL BE IDENTIFIED IN A TABLE LOCATED ON THE SUMMARY OF QUANTITIES SHEETS AND IN THE EROSION, SEDIMENTATION, AND POLLUTION CONTROL PLAN.

CODE	PRACTICE STD OR DETAIL SPEC. SECT.	DETAIL	DESCRIPTION
Ch-2T6	TURF REINFORCEMENT MAT (TRM) CONSTRUCTION DETAIL D-35 SECTION 711	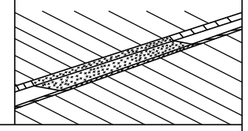 LINE CODE 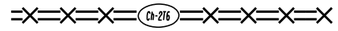	THIS THREE DIMENSIONAL EROSION CONTROL MAT IS USED IN CONJUNCTION WITH PERMANENT VEGETATION IN CHANNELS TO STABILIZE THE SOIL BY REINFORCING THE GRASS ROOTS TO PROVIDE LONG-TERM PROTECTION FOR SHEAR STRESSES 0-12 psf. THE TRM SHALL PROTECT THE CHANNEL FLOWING TO A DEPTH "Dp" RECOMMENDED BY THE GDOT CHANNEL LINING PROGRAM. "Dp" SHALL BE IDENTIFIED IN A TABLE LOCATED ON THE SUMMARY OF QUANTITIES SHEETS AND IN THE EROSION, SEDIMENTATION, AND POLLUTION CONTROL PLAN.
Ch-3	CONCRETE CHANNEL STABILIZATION CONSTRUCTION DETAIL D-10, D-49 SECTION 441	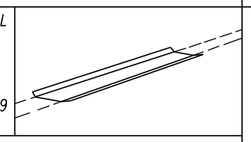 LINE CODE 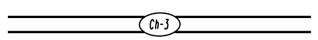	CHANNELS ARE LINED WITH CONCRETE FOR VELOCITIES >/= 10 fps. THIS ITEM CONSISTS OF CONSTRUCTING A 4" THICK CONCRETE CHANNEL. THE CONCRETE SHALL PROTECT THE CHANNEL FLOWING TO A DEPTH "Dp" RECOMMENDED BY THE GDOT CHANNEL LINING PROGRAM. "Dp" SHALL BE IDENTIFIED IN A TABLE LOCATED ON THE SUMMARY OF QUANTITIES SHEETS AND IN THE EROSION, SEDIMENTATION, AND POLLUTION CONTROL PLAN. RIP-RAP SHOULD BE USED TO DISSIPATE ENERGY DOWNSTREAM OF CONCRETE LINED CHANNELS.
Co	CONSTRUCTION EXIT CONSTRUCTION DETAIL D-41 SECTION 163, 800	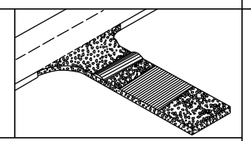 SYMBOL 	A CONSTRUCTION EXIT IS A STONE STABILIZED PAD THAT REDUCES OR ELIMINATES THE TRANSPORT OF MUD FROM CONSTRUCTION AREAS ONTO PUBLIC ROADS BY EQUIPMENT OR RUNOFF. BEST USED AT ACCESS POINTS, i.e. NEW LOCATION PROJECTS, BORROW PITS, WASTE PITS, ACCESS ROADS, ETC. SHOULD BE MINIMUM 20' WIDE, 50' LONG, 6" THICK, AND REQUIRES A GEOTEXTILE UNDERLINER. ON SITES WHERE THE GRADE TOWARD A PAVED AREA IS GREATER THAN 2%, A FULL WIDTH DIVERSION RIDGE 6" TO 8" HIGH WITH 3:1 SLOPES SHALL BE CONSTRUCTED APPROXIMATELY 15' UPSTREAM OF PAVED AREA. A TIRE WASHING AREA TO REMOVE MUD MAY ALSO BE REQUIRED PRIOR TO ENTRANCE ONTO PUBLIC ROADWAYS. ALL CONSTRUCTION EXIT REQUIREMENTS ARE INCLUDED IN THE PRICE OF THE CONSTRUCTION EXIT.
Dc-A	STREAM DIVERSION CHANNEL GEOTEXTILE, POLYETHYLENE FILM SECTION 163	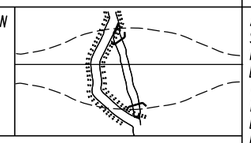 LINE CODE 	A TEMPORARY CHANNEL CONSTRUCTED TO CONVEY FLOW AROUND A CONSTRUCTION SITE WHILE A PERMANENT DRAINAGE STRUCTURE IS BEING CONSTRUCTED IN A NATURAL STREAM. THIS IS A MEASURE USED TO PROTECT STREAM BEDS FROM EROSION. LINE THE CHANNEL WITH GEOTEXTILE OR POLYETHYLENE FILM. INSTALL TWO ROWS OF Sdl-S PARALLEL TO THE CHANNEL TO PREVENT SEDIMENT LADEN RUNOFF FROM ENTERING THE STREAM. THE SIZE OF THE CHANNEL WILL DEPEND ON THE DISCHARGE, CHANNEL GEOMETRY, CHANNEL SLOPE AND ROUGHNESS. IT IS ACCEPTABLE FOR VELOCITIES BETWEEN 0 - 2.5 fps. THE DRAINAGE AREA SHALL BE NOT GREATER THAN 1 SQUARE MILE. CONSTRUCTION OF THE DIVERSION CHANNEL IS INCLUDED IN THE COST OF THE STRUCTURE.

NOTE:

1. DO NOT USE EROSION CONTROL ITEMS IN A FLOWING STREAM OR IN A TIDAL AREA BELOW HIGH TIDE.
2. FOR ADDITIONAL INFORMATION ON THE DESIGN AND APPLICATION OF EROSION AND SEDIMENT CONTROL BEST MANAGEMENT PRACTICES (BMPs), REFER TO THE LATEST EDITION OF THE GEORGIA SOIL AND WATER CONSERVATION COMMISSION'S, "MANUAL FOR EROSION AND SEDIMENT CONTROL IN GEORGIA".
3. GSWCC EQUIVALENT BMPS ARE AVAILABLE IN THE EQUIVALENT BMP LIST ON THE GSWCC DOCUMENT LIST PAGE AND MAY BE USED IN PLACE OF STANDARD BMPS SHOWN ON THE LEGEND WITH A GDOT ACCEPTANCE LETTER OR WHEN LISTED ON GDOT'S OPL.

GDOT Georgia Department of Transportation

NOT TO SCALE

REVISION DATES
03/02/2017
07/01/2026

EROSION CONTROL LEGEND
UNIFORM CODE SHEET
SHEET 3 OF 7

CHECKED:	D. EAGLETON	DATE:	01/01/16	DRAWING No.
BACKCHECKED:		DATE:		52-0003
CORRECTED:		DATE:		
VERIFIED:		DATE:		

CODE	PRACTICE STD OR DETAIL SPEC. SECT.	DETAIL	DESCRIPTION
Dc-B	STREAM DIVERSION CHANNEL GEOTEXTILE ONLY SECTION 163	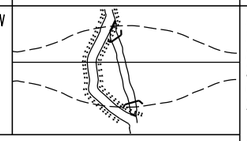	A TEMPORARY CHANNEL CONSTRUCTED TO CONVEY FLOW AROUND A CONSTRUCTION SITE WHILE A PERMANENT DRAINAGE STRUCTURE IS BEING CONSTRUCTED IN A NATURAL STREAM. THIS IS A MEASURE USED TO PROTECT STREAM BEDS FROM EROSION. LINE THE CHANNEL WITH GEOTEXTILE ONLY. INSTALL TWO ROWS OF Sdl-S PARALLEL TO THE CHANNEL TO PREVENT SEDIMENT LADEN RUNOFF FROM ENTERING THE STREAM. THE SIZE OF THE CHANNEL WILL DEPEND ON THE DISCHARGE, CHANNEL GEOMETRY, CHANNEL SLOPE AND ROUGHNESS. IT IS ACCEPTABLE FOR VELOCITIES BETWEEN 2.5 - 9.0 fps. THE DRAINAGE AREA SHALL BE NOT GREATER THAN 1 SQUARE MILE. CONSTRUCTION OF THE DIVERSION CHANNEL IS INCLUDED IN THE COST OF THE STRUCTURE.
	LINE CODE		
Dc-C	STREAM DIVERSION CHANNEL RIP-RAP & GEOTEXTILE SECTION 163	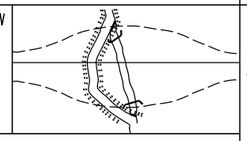	A TEMPORARY CHANNEL CONSTRUCTED TO CONVEY FLOW AROUND A CONSTRUCTION SITE WHILE A PERMANENT DRAINAGE STRUCTURE IS BEING CONSTRUCTED IN A NATURAL STREAM. THIS IS A MEASURE USED TO PROTECT STREAM BEDS FROM EROSION. LINE THE CHANNEL WITH RIP-RAP AND GEOTEXTILE. INSTALL TWO ROWS OF Sdl-S PARALLEL TO THE CHANNEL TO PREVENT SEDIMENT LADEN RUNOFF FROM ENTERING THE STREAM. THE SIZE OF THE CHANNEL WILL DEPEND ON THE DISCHARGE, CHANNEL GEOMETRY, CHANNEL SLOPE AND ROUGHNESS. IT IS ACCEPTABLE FOR VELOCITIES BETWEEN 9.0 - 13.0 fps. THE DRAINAGE AREA SHALL BE NOT GREATER THAN 1 SQUARE MILE. CONSTRUCTION OF THE DIVERSION CHANNEL IS INCLUDED IN THE COST OF THE STRUCTURE.
	LINE CODE		
Di-1	DIVERSION BERM CONSTRUCTION DETAIL D-47 SECTION 205	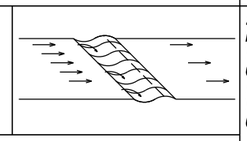	A NON-DESIGNED TEMPORARY EARTHEN BERM WITH A COMPACTED SUPPORTING RIDGE ON THE LOWER SIDE TO BE USED AT THE EDGE OF EMBANKMENT DURING THE GRADING OPERATION. THE BERMS ARE ALSO CONSTRUCTED ABOVE, ACROSS OR BELOW A SLOPE TO REDUCE THE LENGTH OF A SLOPE. THEY ARE USED TO INTERCEPT RUNOFF, PREVENTING SLOPE EROSION AND TO DIRECT THE RUNOFF TO A STABLE OUTLET, DOWN DRAINS "Dnl"OR CATCHMENT AREAS AND ON ALL GRADING PROJECTS.
	LINE CODE	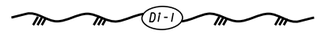	
Di-2	DIVERSION CHANNEL SECTION 205	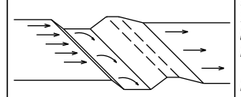	A DESIGNED TEMPORARY OR PERMANENT CHANNEL WITH A COMPACTED SUPPORTING RIDGE ON THE LOWER SIDE TO DIVERT OFFSITE RUNOFF AWAY FROM DISTURBED AREAS WITHIN THE PROJECT AREA. CHANNEL FOR OFFSITE RUNOFF SHALL BE STABILIZED WITH APPROPRIATE CHANNEL STABILIZATION. REFER TO THE LATEST EDITION OF THE "MANUAL FOR EROSION AND SEDIMENT CONTROL IN GEORGIA" FOR DESIGN CRITERIA. A DIVERSION CHANNEL DETAIL MUST ALSO BE PROVIDED IN THE ESPCP. RUNOFF FROM DISTURBED AREAS WITHIN THE PROJECT AREA SHALL NOT BE ALLOWED TO CONVERGE WITH OFFSITE RUNOFF WITHIN THIS DIVERSION.
	LINE CODE		
Dnl	TEMPORARY DOWNDRAIN STRUCTURE FLEXIBLE CONSTRUCTION DETAIL D-19 SECTION 163	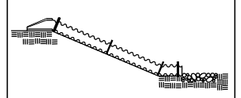	A TEMPORARY PIPE SLOPE DRAIN IS A PLASTIC FLEXIBLE PIPE TO CARRY WATER FROM THE WORK AREA TO A LOWER ELEVATION. TEMPORARY SLOPE DRAINS SHOULD BE PLACED AT INTERVALS OF 350 FEET ON 0% - 2% GRADES, 200 FEET ON STEEPER GRADES AND MORE FREQUENTLY AS DICTATED BY FIELD CONDITIONS. THE TYPICAL PIPE SIZE IS A CORRUGATED 10". THE PIPE WILL BE ANCHORED WITH STAKES AT INTERVALS NOT TO EXCEED 10'. THE OUTLET AREA SHALL BE STABILIZED FOR VELOCITY DISSIPATION AND EROSION CONTROL.
	LINE CODE		

CODE	PRACTICE STD OR DETAIL SPEC. SECT.	DETAIL	DESCRIPTION
Dn2-A	PERMANENT DOWNDRAIN STRUCTURE CONCRETE CONSTRUCTION DETAIL D-9 SECTION 441	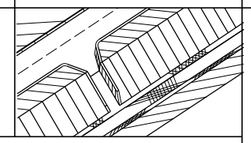	A CONCRETE FLUME TYPE "A" IS USED TO DIRECT SURFACE RUNOFF DOWN A ROADWAY SLOPE INTO ANOTHER FORM OF CONTROL. IT IS USED IN ALL DEPRESSED AREAS WHERE WATER WILL FLOW DOWN THE SLOPE. IT IS DESIGNED FOR A 25-YEAR STORM AND MUST HAVE SOME FORM OF OUTLET PROTECTION. ADDITIONAL LABELING IS NOT REQUIRED IF SHOWN AS A PERMANENT DRAINAGE STRUCTURE ON THE CONSTRUCTION PLANS. INLETS SHALL BE SPACED ACCORDING TO GDOT GUIDELINES (REGARDING GUTTER SPREAD AND OTHER CRITERIA).
	LINE CODE		
Dn2-B	PERMANENT DOWNDRAIN STRUCTURE CONCRETE CONSTRUCTION DETAIL D-9 SECTION 441	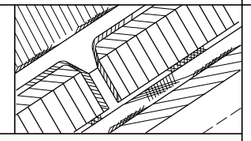	A CONCRETE FLUME TYPE "B" IS USED TO DIRECT SURFACE DITCH RUNOFF DOWN A BACK SLOPE INTO ANOTHER FORM OF CONTROL. IT IS USED IN DEPRESSED AREAS WHERE CONCENTRATED OFFSITE WATER REACHES THE CUT SLOPE. IT IS DESIGNED TO SAFELY CONVEY WATER DOWN THE CUT SLOPE. IT IS DESIGNED FOR A 25-YEAR STORM AND MUST HAVE SOME FORM OF OUTLET PROTECTION. ADDITIONAL LABELING IS NOT REQUIRED IF SHOWN AS A PERMANENT DRAINAGE STRUCTURE ON THE CONSTRUCTION PLANS. INLETS SHALL BE SPACED ACCORDING TO GDOT GUIDELINES (REGARDING GUTTER SPREAD AND OR OTHER CRITERIA).
	LINE CODE	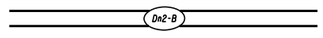	
Dn2-1	PERMANENT DOWNDRAIN STRUCTURE GA. STD 9013 TP1, 9017J TP1, DETAIL D-26 TP1 SECTION 576, 577	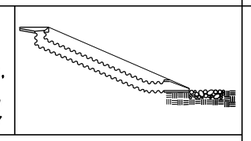	CONCRETE DRAIN INLET WITH METAL PIPE IS USED TO DRAIN CURBS, ON A GRADE, DOWN TO A LOWER ELEVATION. THIS IS A PERMANENT STRUCTURE, REQUIRING OUTLET PROTECTION, TEMPORARY AND PERMANENT. INLETS SHALL BE SPACED ACCORDING TO GDOT GUIDELINES (REGARDING GUTTER SPREAD AND OR OTHER CRITERIA).
	LINE CODE	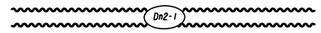	
Dn2-2	PERMANENT DOWNDRAIN STRUCTURE GA. STD 9013 TP2, 9017J TP2, DETAIL D-26 TP2 SECTION 576, 577	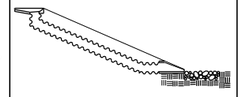	CONCRETE DRAIN INLET AND METAL PIPE IS USED TO DRAIN CURB, IN A SAG, DOWN TO A LOWER ELEVATION. THIS IS A PERMANENT STRUCTURE, REQUIRING OUTLET PROTECTION, TEMPORARY AND PERMANENT. INLETS SHALL BE SPACED ACCORDING TO GDOT GUIDELINES (REGARDING GUTTER SPREAD AND OR OTHER CRITERIA).
	LINE CODE		

NOTE:

1. DO NOT USE EROSION CONTROL ITEMS IN A FLOWING STREAM OR IN A TIDAL AREA BELOW HIGH TIDE.
2. FOR ADDITIONAL INFORMATION ON THE DESIGN AND APPLICATION OF EROSION AND SEDIMENT CONTROL BEST MANAGEMENT PRACTICES (BMPs), REFER TO THE LATEST EDITION OF THE GEORGIA SOIL AND WATER CONSERVATION COMMISSION'S, "MANUAL FOR EROSION AND SEDIMENT CONTROL IN GEORGIA".
3. GSWCC EQUIVALENT BMPS ARE AVAILABLE IN THE EQUIVALENT BMP LIST ON THE GSWCC DOCUMENT LIST PAGE AND MAY BE USED IN PLACE OF STANDARD BMPS SHOWN ON THE LEGEND WITH A GDOT ACCEPTANCE LETTER OR WHEN LISTED ON GDOT'S QPL.

GDOT
Georgia Department of Transportation

NOT TO SCALE

REVISION DATES		
03/02/2017		
07/01/2026		

EROSION CONTROL LEGEND
UNIFORM CODE SHEET
SHEET 4 OF 7

CHECKED:	D. EAGLETON	DATE:	01/01/16	DRAWING No.
BACKCHECKED:		DATE:		52-0004
CORRECTED:		DATE:		
VERIFIED:		DATE:		

CODE	PRACTICE STD OR DETAIL SPEC. SECT.	DETAIL	DESCRIPTION
Fr	FILTER RING CONSTRUCTION DETAIL D-46 SECTION 163	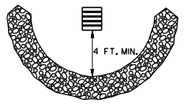	A TEMPORARY STONE BARRIER CONSTRUCTED AT DRAINAGE STRUCTURE INLETS AND POST-CONSTRUCTION POND OUTLETS. IT REDUCES RUNOFF VELOCITY AND HELPS PREVENT SEDIMENT FROM LEAVING SITE PRIOR TO PERMANENT STABILIZATION OF THE DISTURBED AREA. REFER TO THE LATEST EDITION OF THE "MANUAL FOR EROSION AND SEDIMENT CONTROL IN GEORGIA" FOR ADDITIONAL INFORMATION ON USAGE.
	SYMBOL: Fr		
Rd	ROCK FILTER DAM CONSTRUCTION DETAIL D-43 SECTION 163, 603	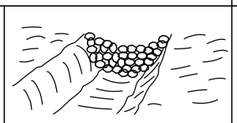	ROCK FILTER DAMS ARE CONSTRUCTED OF TYPE 3 STONE RIP-RAP FACED WITH #57 STONE ON THE UPSTREAM SIDE. THEY ARE PLACED ACROSS DRAINAGEWAYS WHICH DRAIN 50 ACRES OR LESS. GEOTEXTILE UNDERLINER SHALL BE USED WHEN PLACING ROCK FILTER DAMS. THE DAM SHOULD NOT BE HIGHER THAN THE CHANNEL BANKS. ROCK FILTER DAMS SHOULD BE USED IN DITCHES PRIOR TO DISCHARGING INTO STREAMS, WETLANDS, OPEN-WATERS, OR OTHER ESAs.
	SYMBOL: Rd		
Rd-B	STONE FILTER BERM CONSTRUCTION DETAIL D-50 SECTION 163, 603		STONE FILTER BERMS ARE CONSTRUCTED SIMILAR TO ROCK FILTER DAMS FOR A LINEAR APPLICATION. THEY ARE CONSTRUCTED OF TYPE-3 STONE RIP-RAP FACED WITH #57 STONE ON THE UPSTREAM SIDE. GEOTEXTILE UNDERLINER SHALL BE USED WHEN PLACING STONE FILTER BERMS. STONE FILTER BERMS ARE IDEAL ALONG THE PERIMETER FOR SHEET FLOW AND/OR SHALLOW CONCENTRATED FLOW TO A COMMON LOW AREA WHERE PERIMETER SILT FENCE ALONE MAY BE INSUFFICIENT. THERE IS NO WELL-DEFINED CHANNEL FOR A STANDARD ROCK FILTER DAM, AND/OR CONSTRUCTING A ROCK OUTLET TEMPORARY SEDIMENT TRAP IS NOT APPLICABLE.
	LINE CODE: Rd-B		
Rp	RIP-RAP SECTION 603		RIP-RAP IS A FLEXIBLE PERMANENT BLANKET FOR PROTECTION OF FILL SLOPES AND BRIDGE END ROLLS. RIP-RAP TYPE-1 SHOULD BE PLACED ON TOP OF A GEOTEXTILE UNDERLINER AT A MINIMUM 24" THICKNESS OR AS INDICATED ON THE PLANS. RIP-RAP MAY ALSO BE USED AT DRAINAGE STRUCTURE OUTLETS WITHIN THE RIGHT-OF-WAY. HOWEVER, APPROPRIATE OUTLET PROTECTION SHOULD BE PROVIDED AT OUTFALLS. REFER TO STORM DRAIN OUTLET PROTECTION FOR ADDITIONAL INFORMATION ON USING RIP-RAP AT OUTFALLS.
	PATTERN: Rp		
Rt-P	RETROFITTING PERFORATED HALF-ROUND PIPE CONSTRUCTION DETAIL D-44 SECTION 163	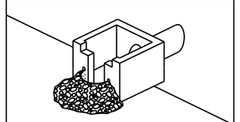	A PERFORATED HALF-ROUND PIPE WITH STONE FILTER PLACED IN FRONT OF A PERMANENT STORMWATER DETENTION POND OUTLET STRUCTURE TO SERVE AS A TEMPORARY SEDIMENT FILTER. SHOULD BE USED ONLY IN DETENTION PONDS WITH LESS THAN 30 ACRES TOTAL DRAINAGE AREA. SHALL ONLY BE USED IN DETENTION BASINS LARGE ENOUGH TO STORE 67 CUBIC YARDS OF SEDIMENT PER ACRE OF DISTURBED AREA. REFER TO THE LATEST EDITION OF THE "MANUAL FOR EROSION AND SEDIMENT CONTROL IN GEORGIA" FOR DESIGN CRITERIA.
	SYMBOL: Rt-P		

CODE	PRACTICE STD OR DETAIL SPEC. SECT.	DETAIL	DESCRIPTION
Rt-B	RETROFITTING SLOTTED BOARD DAM CONSTRUCTION DETAIL D-45 SECTION 163	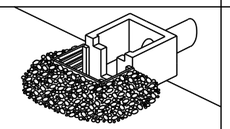	A SLOTTED BOARD DAM CONSISTS OF STONE AND/OR FILTER FABRIC AND BOARDS WITH 0.5" - 1.0" SPACING TO SERVE AS A TEMPORARY SEDIMENT FILTER. PERMANENT STORMWATER DETENTION POND OUTLET: -DRAINAGE AREA UP TO 100 ACRES -DETENTION BASINS LARGE ENOUGH TO STORE 67 CUBIC YARDS OF SEDIMENT PER ACRE OF DISTURBED AREA ROADWAY DRAINAGE STRUCTURE: -OPEN END PIPES, WINGED HEADWALLS, OR CONCRETE WEIR OUTLETS WITH DRAINAGE AREA LESS THAN 30 ACRES REFER TO THE LATEST EDITION OF THE "MANUAL FOR EROSION AND SEDIMENT CONTROL IN GEORGIA" FOR DESIGN CRITERIA.
	SYMBOL: Rt-B		
Rt-Sg1 Rt-Sg2 Rt-Sg3	RETROFITTING SILT CONTROL GATES CONSTRUCTION DETAIL D-20 SECTION 163	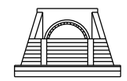	A SILT CONTROL GATE CONSISTS OF BOARDS WITHOUT SPACING AND FILTER FABRIC TO BE USED FOR TEMPORARY SEDIMENT STORAGE ON ROADWAY PROJECTS AT THE INLET OF STRUCTURES WITH A DRAINAGE AREA UP TO 50 ACRES. THE DISTURBED AREA WITHIN THE DRAINAGE AREA SHALL NOT EXCEED 5 ACRES. SILT CONTROL GATES SHOULD NOT BE USED ALONE, BUT WITH ANOTHER BMP DOWNSTREAM PRIOR TO DISCHARGE LEAVING PROJECT AREA. DO NOT USE SILT GATES IN STATE WATERS. Rt-Sg1=TYPE 1: USED ON BOX CULVERTS Rt-Sg2=TYPE 2: USED ON STRAIGHT HEADWALLS Rt-Sg3=TYPE 3: USED ON FLARED END SECTIONS AND TAPERED HEADWALLS
	SYMBOL: Rt-Sg1, Rt-Sg2, Rt-Sg3		
Sdl-NS	SEDIMENT BARRIER (NON-SENSITIVE) SILT FENCE TYPE A CONSTRUCTION DETAIL D-24 SECTION 171		SEDIMENT BARRIERS MINIMIZE AND PREVENT SEDIMENT CARRIED BY SHEET FLOW FROM LEAVING THE PROJECT AREA BY CAUSING DEPOSITION AND/OR FILTRATION OF SEDIMENT. SILT FENCE USED AS PERIMETER CONTROL SHALL NOT BE INSTALLED ACROSS CONCENTRATED FLOW. TYPE-A SILT FENCE IS TYPICALLY USED IN NON-ENVIRONMENTALLY SENSITIVE AREAS (ESAs) OR IN AREAS WITH FILLS LESS THAN 10'. IT SHOULD BE PLACED A MINIMUM OF 10' FROM CONSTRUCTION LIMITS OR ALONG THE RIGHT-OF-WAY LINE.
	LINE CODE: A — A — A — Sdl-NS — A — A — A		
Sdl-S	SEDIMENT BARRIER (SENSITIVE) SILT FENCE TYPE C CONSTRUCTION DETAIL D-24 SECTION 171	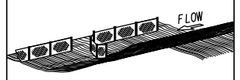	SEDIMENT BARRIERS MINIMIZE AND PREVENT SEDIMENT CARRIED BY SHEET FLOW FROM LEAVING THE PROJECT AREA BY CAUSING DEPOSITION AND/OR FILTRATION OF SEDIMENT. SILT FENCE USED AS PERIMETER CONTROL SHALL NOT BE INSTALLED ACROSS CONCENTRATED FLOW. TYPE-C SILT FENCE IS TYPICALLY USED IN ENVIRONMENTALLY SENSITIVE AREAS (ESAs) OR IN AREAS WITH FILLS 10' AND GREATER. ALL ENVIRONMENTALLY SENSITIVE AREAS (ESAs) SHALL BE PROTECTED WITH A DOUBLE-ROW OF TYPE-C SILT FENCE REGARDLESS OF FILL HEIGHT. A SINGLE-ROW MAY BE USED FOR OTHER APPLICATIONS. IT SHOULD BE PLACED A MINIMUM OF 10' FROM CONSTRUCTION LIMITS OR ALONG THE RIGHT-OF-WAY LINE.
	LINE CODE: C — C — C — Sdl-S — C — C — C		

NOTE:

1. DO NOT USE EROSION CONTROL ITEMS IN A FLOWING STREAM OR IN A TIDAL AREA BELOW HIGH TIDE.
2. FOR ADDITIONAL INFORMATION ON THE DESIGN AND APPLICATION OF EROSION AND SEDIMENT CONTROL BEST MANAGEMENT PRACTICES (BMPs), REFER TO THE LATEST EDITION OF THE GEORGIA SOIL AND WATER CONSERVATION COMMISSION'S, "MANUAL FOR EROSION AND SEDIMENT CONTROL IN GEORGIA".
3. GSWCC EQUIVALENT BMPS ARE AVAILABLE IN THE EQUIVALENT BMP LIST ON THE GSWCC DOCUMENT LIST PAGE AND MAY BE USED IN PLACE OF STANDARD BMPS SHOWN ON THE LEGEND WITH A GDOT ACCEPTANCE LETTER OR WHEN LISTED ON GDOT'S OPL.

GDOT Georgia Department of Transportation

NOT TO SCALE

REVISION DATES		
03/02/2017		
07/01/2026		

EROSION CONTROL LEGEND
UNIFORM CODE SHEET
SHEET 5 OF 7

CHECKED:	D. EAGLETON	DATE:	01/01/16	DRAWING No.
BACKCHECKED:		DATE:		52-0005
CORRECTED:		DATE:		
VERIFIED:		DATE:		

CODE	PRACTICE STD OR DETAIL SPEC. SECT.	DETAIL	DESCRIPTION
Sd1-BB	SEDIMENT BARRIER BRUSH BARRIER CONSTRUCTION DETAIL D-24B SECTION 201		THIS ITEM CONSISTS OF INTERMINGLED BRUSH, LOGS, ETC. SO AS NOT TO FORM A SOLID DAM. CONSTRUCTED AT THE TOE OF FILL SLOPES ONLY DURING THE CLEARING AND GRUBBING OPERATION. THE BARRIER SHOULD BE USED AT THE TOE OF FILL SLOPES ON GRADING PROJECTS IN RURAL AREAS WHERE SUFFICIENT RIGHT OF WAY OR EASEMENT IS AVAILABLE (10 FEET OR MORE). THE BARRIER SHOULD RUN ROUGHLY PERPENDICULAR TO THE FLOW OF WATER WHERE THIS DOES NOT CONFLICT WITH RIGHT-OF-WAY OR EASEMENT LIMITS. THEY WILL NOT BE PLACED IN WETLANDS. TYPICALLY NOT SHOWN ON PLANS. PAYMENT FOR THIS ITEM IS INCLUDED IN THE CLEARING AND GRUBBING COST. NO SEPARATE PAYMENT SHALL BE MADE.
	LINE CODE * * * (Sd1-BB) * * *		
Sd2-B	INLET SEDIMENT TRAP (BAFFLE BOX) CONSTRUCTION DETAIL D-42 SECTION 163	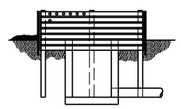	BAFFLE BOX INLET SEDIMENT TRAP USED FOR INLETS RECEIVING HIGH FLOW RATE AND/OR VELOCITY. A GUIDE FOR USE WILL BE FOR AN INLET RECEIVING FLOW RATES 7 cfs AND GREATER.
	SYMBOL Sd2-B		
Sd2-Bg	INLET SEDIMENT TRAP (BLOCK & GRAVEL) CONSTRUCTION DETAIL D-42 SECTION 163		BLOCK AND GRAVEL DROP INLET PROTECTION USED FOR WHERE HEAVY FLOWS ARE EXPECTED AND WHERE OVERFLOW CAPACITY IS NECESSARY TO PREVENT EXCESSIVE PONDING AROUND THE STRUCTURE. CAN BE USED AT CULVERT INLETS. A GUIDE FOR USE WILL BE FOR AN INLET RECEIVING FLOW RATES THAT RANGE FROM 5 - 7 cfs.
	SYMBOL Sd2-Bg		
Sd2-F	INLET SEDIMENT TRAP (FILTER FABRIC) CONSTRUCTION DETAIL D-24C SECTION 163		(a) A SEDIMENT BARRIER CONSISTING OF A PREFABRICATED FRAME WITH FILTER FABRIC USED AROUND A DROP INLET OR CATCH BASIN. (b) A SEDIMENT BARRIER CONSISTING OF A PERFORATED METAL STAND PIPE WITH FILTER FABRIC USED AROUND A DROP INLET OR CATCH BASIN. (c) TYPE C SILT FENCE WITH SUPPORTING FRAME CAN BE USED AS AN ALTERNATE TO INLET SEDIMENT TRAP FOR AREAS WITH SLOPES < 5%. THIS ITEM IS USED TO PREVENT SILT FROM ENTERING THE PIPE SYSTEM. SHALL NOT APPLY TO INLETS RECEIVING CONCENTRATED FLOWS. RECOMMENDED FOR INLET RECEIVING FLOW RATES THAT RANGE FROM 0 - 4 cfs.
	SYMBOL Sd2-F		
Sd2-G	INLET SEDIMENT TRAP (GRAVEL) CONSTRUCTION DETAIL D42 SECTION 163		GRAVEL DROP INLET PROTECTION USED WHERE HEAVY CONCENTRATED FLOWS ARE EXPECTED. STONE AND GRAVEL ARE USED TO TRAP SEDIMENT. THE SLOPE TOWARD THE INLET SHALL BE NO MORE THAN 3:1. A GUIDE FOR USE WILL BE FOR AN INLET RECEIVING FLOW RATES THAT RANGE FROM 3 - 5 cfs.
	SYMBOL Sd2-G		

CODE	PRACTICE STD OR DETAIL SPEC. SECT.	DETAIL	DESCRIPTION
Sd3	TEMPORARY SEDIMENT BASIN CONSTRUCTION DETAIL D-22A, D-22B SECTION 163	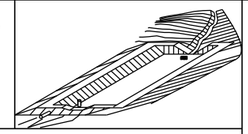	A BASIN CREATED BY EXCAVATING AN AREA, DAMMING CONCENTRATED FLOW, OR A COMBINATION OF BOTH. THE BASIN IS DESIGNED TO STORE 67 CUBIC YARDS OF SEDIMENT PER ACRE OF DRAINAGE AREA. THE DRAINAGE AREA SHOULD NOT EXCEED 150 ACRES. BASINS TYPICALLY CONSISTS OF A DAM, PRINCIPAL SPILLWAY, AND AN EMERGENCY SPILLWAY. A FLOATING SURFACE SKIMMER SHALL BE REQUIRED AS PART OF THE PRINCIPAL SPILLWAY UNLESS INFEASIBLE. SUFFICIENT RIGHT-OF-WAY OR EASEMENT IS NEEDED FOR BASIN CONSTRUCTION AND MAINTENANCE ACCESS. SEDIMENT BASINS SHALL BE CONSIDERED ON ALL PROJECTS, BUT MAY NOT BE PRACTICAL. BASINS SHOULD BE LOCATED TO MINIMIZE INTERFERENCE WITH CONSTRUCTION ACTIVITIES AND UTILITIES. REFER TO THE LATEST EDITION OF THE "MANUAL FOR EROSION AND SEDIMENT CONTROL IN GEORGIA" FOR DESIGN CRITERIA.
	SYMBOL Sd3		
Sd4-C	ROCK OUTLET TEMPORARY SEDIMENT TRAP CONSTRUCTION DETAIL D-53 SECTION 163	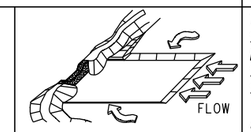	TEMPORARY POND WITH ROCK OUTLET DESIGNED TO STORE 67 CUBIC YARDS OF SEDIMENT PER DRAINAGE AREA. DRAINAGE AREA SHALL NOT EXCEED 5 ACRES. DISTINGUISHED FROM TEMPORARY SEDIMENT BASIN BY LACK OF PRINCIPAL SPILLWAY. MAXIMUM POND DEPTH FROM BOTTOM OF POND TO EMERGENCY SPILLWAY IS 4 FEET. A TEMPORARY SEDIMENT BASIN SHALL BE EVALUATED PRIOR TO CONSIDERING A TEMPORARY SEDIMENT TRAP. A TEMPORARY SEDIMENT TRAP IS IDEAL FOR SMALL AREAS WITH NO UNUSUAL DRAINAGE FEATURES AND EFFECTIVE AGAINST COARSE SEDIMENT, BUT NOT AGAINST SILT OR CLAY PARTICLES THAT REMAIN SUSPENDED. REFER TO THE LATEST EDITION OF THE "MANUAL FOR EROSION AND SEDIMENT CONTROL IN GEORGIA" FOR DESIGN CRITERIA.
	SYMBOL Sd4-C		
Sk	FLOATING SURFACE SKIMMER CONSTRUCTION DETAIL D-22A, D-22B SECTION 163	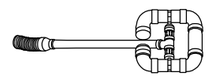	A BUOYANT DEVICE THAT DRAINS WATER FROM THE SURFACE OF A TEMPORARY SEDIMENT BASIN AT A CONTROLLED FLOW RATE. THE INLET/ORIFICE SIZE IS DESIGNED TO DRAIN THE BASIN WITHIN 24 - 48 HOURS. THE SKIMMER INFORMATION SHALL BE PROVIDED IN CONJUNCTION WITH THE SEDIMENT BASIN INFORMATION IN PLANS. IF A SKIMMER IS INFEASIBLE, THE DESIGNER SHALL PROVIDE A WRITTEN JUSTIFICATION IN THE PLANS. SKIMMERS ARE ATTACHED TO A RISER WITHOUT PERFORATIONS AND ACTS AS THE PRIMARY SPILLWAY. THE SKIMMER BMP SYMBOL SHALL BE SHOWN IN CONJUNCTION WITH THE TEMPORARY SEDIMENT BASIN BMP SYMBOL WHEN APPLICABLE. REFER TO THE LATEST EDITION OF THE "MANUAL FOR EROSION AND SEDIMENT CONTROL IN GEORGIA" FOR ADDITIONAL INFORMATION.
	SYMBOL Sk		
Sr	TEMPORARY STREAM CROSSING SECTION 107	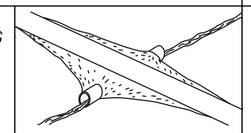	A TEMPORARY STRUCTURE INSTALLED ACROSS A FLOWING STREAM OR WATERCOURSE FOR USE BY CONSTRUCTION EQUIPMENT. THIS BMP PROVIDES A MEANS TO CROSS STREAMS OR WATERCOURSES WITHOUT MOVING SEDIMENT INTO STREAMS, DAMAGING THE STREAM BED OR CHANNEL, OR CAUSING FLOODING. THIS BMP SHOULD NOT BE USED ON STREAMS WITH DRAINAGE AREAS GREATER THAN ONE SQUARE MILE, UNLESS SPECIFICALLY DESIGNED TO ACCOMMODATE THE ADDITIONAL DRAINAGE AREA BY THE DESIGN PROFESSIONAL. A CERTIFICATION STATEMENT AND SIGNATURE SHALL ACCOMPANY THE DESIGN. THIS BMP SHALL BE DESIGNED ACCORDING TO THE LATEST EDITION OF THE "MANUAL FOR EROSION AND SEDIMENT CONTROL IN GEORGIA". FOR CONTRACTOR'S USE ONLY!
	SYMBOL Sr		

NOTE:

1. DO NOT USE EROSION CONTROL ITEMS IN A FLOWING STREAM OR IN A TIDAL AREA BELOW HIGH TIDE.
2. FOR ADDITIONAL INFORMATION ON THE DESIGN AND APPLICATION OF EROSION AND SEDIMENT CONTROL BEST MANAGEMENT PRACTICES (BMPs), REFER TO THE LATEST EDITION OF THE GEORGIA SOIL AND WATER CONSERVATION COMMISSION'S, "MANUAL FOR EROSION AND SEDIMENT CONTROL IN GEORGIA".
3. GSWCC EQUIVALENT BMPS ARE AVAILABLE IN THE EQUIVALENT BMP LIST ON THE GSWCC DOCUMENT LIST PAGE AND MAY BE USED IN PLACE OF STANDARD BMPS SHOWN ON THE LEGEND WITH A GDOT ACCEPTANCE LETTER OR WHEN LISTED ON GDOT'S OPL.

Georgia Department of Transportation

NOT TO SCALE

REVISION DATES
03/02/2017
11/28/2018
07/01/2026

EROSION CONTROL LEGEND
UNIFORM CODE SHEET
SHEET 6 OF 7

CHECKED:	D. EAGLETON	DATE:	01/01/16	DRAWING No.
BACKCHECKED:		DATE:		52-0006
CORRECTED:		DATE:		
VERIFIED:		DATE:		

CODE	PRACTICE STD OR DETAIL SPEC. SECT.	DETAIL	DESCRIPTION
St	STORM DRAIN OUTLET PROTECTION GA. STD. 1125 & 2332	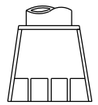 SYMBOL St	A PIPE OR BOX CULVERT OUTLET HEADWALL WITH AN APRON AND DISSIPATOR BLOCKS IS USED TO REDUCE VELOCITY AT THE OUTLET OF A PIPE PRIOR TO ENTERING AN EXISTING STREAM OR PUBLICLY MAINTAINED DRAINAGE SYSTEM. IT IS USED ON THE OUTLET OF ALL BOX CULVERTS AND ON 48" AND LARGER PIPES. MAY BE USED ON INLET FOR FLOWING STREAMS. USE ON SMALL PIPES WHEN OUTLET VELOCITY OF THE 25-YEAR STORM IS 12 fps AND GREATER.
St-Rp	STORM DRAIN OUTLET PROTECTION (RIP-RAP) CONSTRUCTION DETAIL D-55 SECTION 603	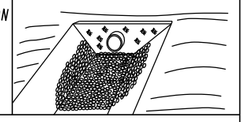 PATTERN FLAT AREA St-Rp OR St-Rp WELL-DEFINED CHANNEL	RIP-RAP OUTLET PROTECTION IS USED TO REDUCE VELOCITY AT THE OUTLET OF A PIPE, CHANNEL, OR STRUCTURE PRIOR TO ENTERING AN EXISTING STREAM OR PUBLICLY MAINTAINED DRAINAGE SYSTEM. THE MINIMUM DESIGN OF RIP-RAP OUTLET PROTECTION SHALL BE THE 25-YEAR STORM PEAK FLOW, BUT LARGER STORMS ARE RECOMMENDED. TYPE-1 RIP-RAP AT A DEPTH OF 36" AND PLACED ON FILTER FABRIC IS PREFERRED FOR ALL d50 </= 1.2 FEET. TYPE-3 RIP-RAP AT A DEPTH OF 18" AND PLACED ON FILTER FABRIC MAY BE USED FOR d50 </= 0.7 FEET. REFER TO THE LATEST EDITION OF THE "MANUAL FOR EROSION AND SEDIMENT CONTROL IN GEORGIA" FOR REQUIRED DESIGN DIMENSIONS AND OTHER INFORMATION TO BE INCLUDED IN THE PLANS.
Su	SURFACE ROUGHENING SERRATED SLOPES CONSTRUCTION DETAIL S-7 SECTION 205	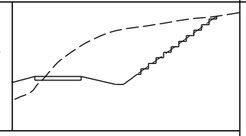 LINE CODE Su	PROVIDING A ROUGH SOIL SURFACE WITH HORIZONTAL DEPRESSIONS, BY OPERATING A CLEATED DOZER ON THE SLOPE IN A VERTICAL DIRECTION. CREATING SERRATED SLOPES IN THE GRADING PROCESS TO CONSTRUCT BENCHES WILL REDUCE RUNOFF VELOCITY AND INCREASE INFILTRATION OF WATER. IN MOST CASES THIS BMP IS NOT REQUIRED TO BE SHOWN ON THE PLANS, BUT REQUIRED TO BE COMPLETED BY THE CONTRACTOR UNDER ALL PROJECTS. IF SERRATED SLOPES ARE SPECIFIED BY THE SOIL SURVEY, THEN THIS BMP SHALL BE SHOWN ON THE PLANS WHERE SERRATED SLOPES ARE TO BE USED.
Tc-F	TURBIDITY CURTAIN FLOATING CONSTRUCTION DETAIL D-51 SECTION 170	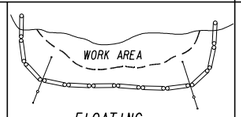 WORK AREA FLOATING LINE CODE Tc-F	A FLOATING TURBIDITY CURTAIN IS USED TO PREVENT SEDIMENT FROM MOVING IN WATER BY ALLOWING IT TO DROP OUT OF SUSPENSION AND REMAIN WITHIN THE CONSTRUCTION AREA. IT IS TYPICALLY USED WHERE CONSTRUCTION IS REQUIRED IN A LARGE BODY OF WATER SUCH AS LAKES AND RIVERS. IT SHOULD BE USED AS DIRECTED BY THE ENGINEER. THIS BMP IS ONLY TO BE USED WHEN PERMITTED FILL IS BEING PLACED INTO A STATE WATER, OR AS A SUPPLEMENT TO ADEQUATELY PLACED PERIMETER BMPs. IT MAY ALSO BE REFERRED TO AS A FLOATING BOOM, SILT BARRIER, OR SILT CURTAIN.
Tc-S	TURBIDITY CURTAIN STAKED CONSTRUCTION DETAIL D-51 SECTION 170	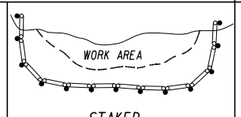 WORK AREA STAKED LINE CODE Tc-S	A STAKED TURBIDITY CURTAIN IS USED TO PREVENT SEDIMENT FROM MOVING IN WATER BY ALLOWING IT TO DROP OUT OF SUSPENSION AND REMAIN WITHIN THE CONSTRUCTION AREA. IT IS TYPICALLY USED IN SHALLOW INUNDATED AREAS. IT MAY BE USED TO PROTECT A SMALL STREAM BEING REALIGNED OR RESTORED. IN THIS CASE, CURTAIN SHOULD EXTEND TO BOTTOM OF STREAMBED. THE HEIGHT SHOULD BE LIMITED TO 5 FEET UNLESS DIRECTED AND EXTEND 2 FEET ABOVE NORMAL WATER ELEVATION. IT SHOULD BE USED AS DIRECTED BY THE ENGINEER. THIS BMP IS ONLY TO BE USED WHEN PERMITTED FILL IS BEING PLACED INTO A STATE WATER, OR AS A SUPPLEMENT TO ADEQUATELY PLACED PERIMETER BMPs. IT MAY BE REFERRED TO AS A SILT BARRIER OR SILT CURTAIN.

CODE	PRACTICE STD OR DETAIL SPEC. SECT.	DETAIL	DESCRIPTION

NOTE:

1. DO NOT USE EROSION CONTROL ITEMS IN A FLOWING STREAM OR IN A TIDAL AREA BELOW HIGH TIDE.
2. FOR ADDITIONAL INFORMATION ON THE DESIGN AND APPLICATION OF EROSION AND SEDIMENT CONTROL BEST MANAGEMENT PRACTICES (BMPs), REFER TO THE LATEST EDITION OF THE GEORGIA SOIL AND WATER CONSERVATION COMMISSION'S, "MANUAL FOR EROSION AND SEDIMENT CONTROL IN GEORGIA".
3. GSWCC EQUIVALENT BMPS ARE AVAILABLE IN THE EQUIVALENT BMP LIST ON THE GSWCC DOCUMENT LIST PAGE AND MAY BE USED IN PLACE OF STANDARD BMPS SHOWN ON THE LEGEND WITH A GDOT ACCEPTANCE LETTER OR WHEN LISTED ON GDOT'S QPL.

GDOT Georgia Department of Transportation

NOT TO SCALE

REVISION DATES
03/02/2017
07/01/2026

EROSION CONTROL LEGEND
UNIFORM CODE SHEET
SHEET 7 OF 7

CHECKED:	D. EAGLETON	DATE:	01/01/16	DRAWING No.
BACKCHECKED:		DATE:		52-0007
CORRECTED:		DATE:		
VERIFIED:		DATE:		

STATE	PROJECT NUMBER	SHEET NO.	TOTAL SHEETS

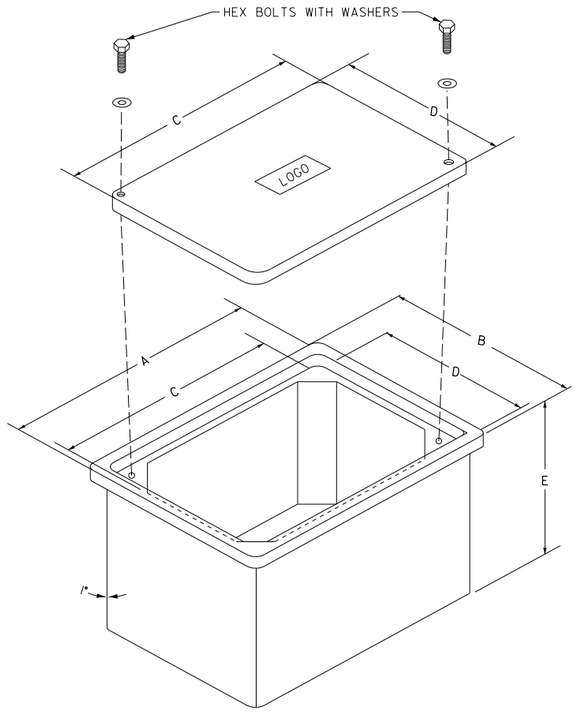

PULLBOX ASSEMBLY

PULLBOX TYPE	MINIMUM SIZE (IN.)					DIMENSION TOLERANCE FOR C & D
	A	B	C	D	E	
2	21	14	18	11	12	+/- 1"
3	33	20	30	17	12	+/- 1"
4S	38	26	36	24	18	+/- 2"
4	38	26	36	24	36	+/- 2"
5S	50	32	48	30	18	+/- 2"
5	50	32	48	30	36	+/- 2"
6	38	26	36	24	36	+/- 2"
7	50	32	48	30	36	+/- 2"

NOTES:

1. PULL BOXES TYPE 4, 4S, 5, 5S, 6 & 7 SHALL HAVE 1" (DEGREE) FLARES FOR MAXIMUM STRENGTH.
2. DESIGN PULL BOXES TO MEET OR EXCEED THE TIER LOADING SET FORTH IN SPECIFICATIONS 682 AND 924.
3. LOGO SHALL SAY "ELECTRIC", "GDOT COMMUNICATIONS OR "TRAFFIC SIGNALS", DEPENDING ON CONTENTS. LOGO SHALL BE APPROVED PRIOR TO ORDERING.
4. ELECTRICAL CABLE SHALL NOT BE SPLICED INSIDE PULLBOXES.

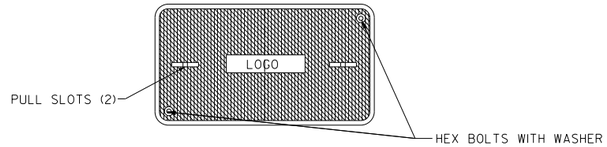

TOP VIEW

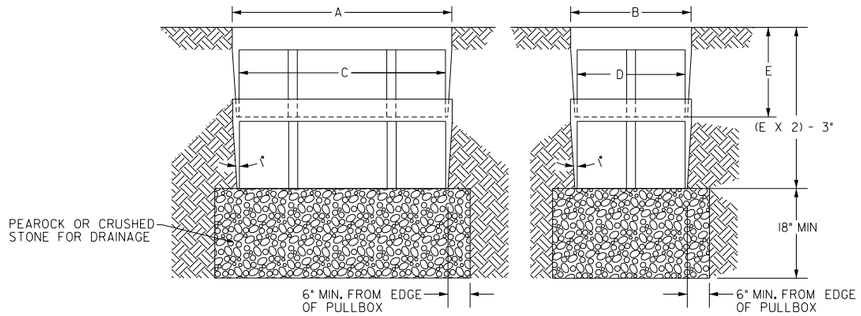

SIDE VIEW END VIEW

TYPE 4 AND 5
STACKABLE ASSEMBLY

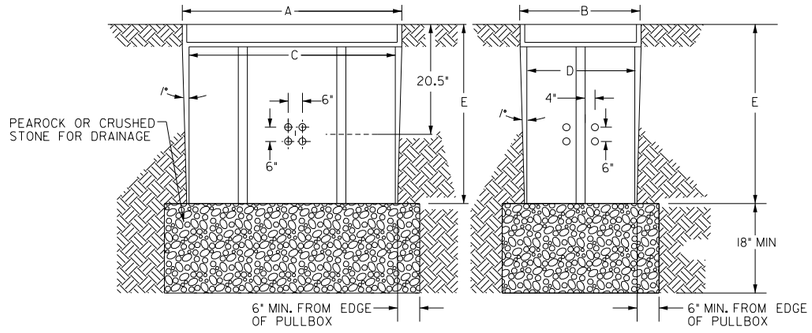

SIDE VIEW END VIEW

TYPE 6 AND 7

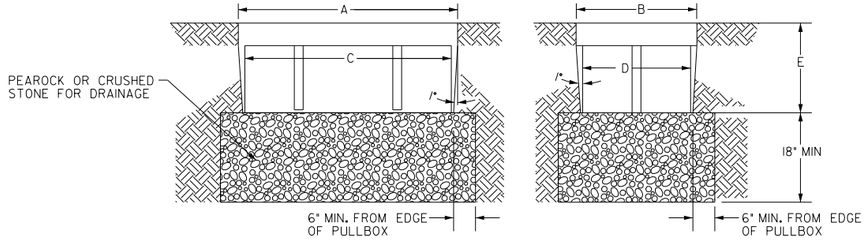

SIDE VIEW END VIEW

TYPE 2, 3, 4S AND 5S

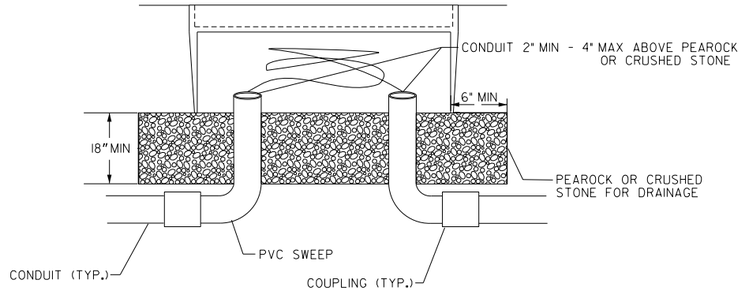

TYPICAL CONDUIT ENTRANCE DETAILS

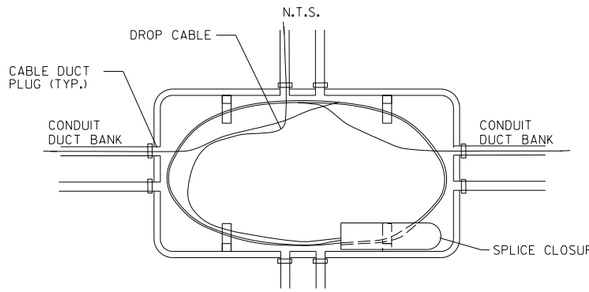

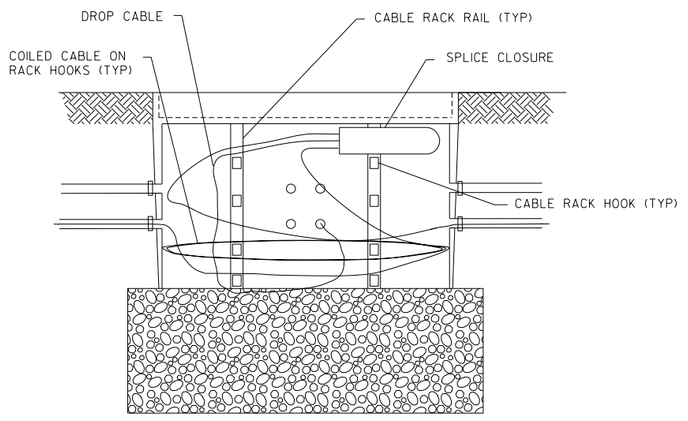

TRUNK AND DROP CABLE IN CLOSURE SHALL BE COILED TOGETHER. SEPARATE CABLES SHALL BE COILED SEPARATELY AND SUPPORTED ON SEPARATE RACK HOOKS.

CABLE MANAGEMENT DETAIL

DEPARTMENT OF TRANSPORTATION
STATE OF GEORGIA

CONSTRUCTION DETAILS

ELECTRICAL DETAIL
PULL BOX ASSEMBLY AND INSTALLATION

DATE: JULY 2022
REVISION:
BY:
NO SCALE

NUMBER
ELEC-02

GDOT Georgia Department of Transportation | P. I. No. XXXXXXX

NOTE:
PAYMENT FOR WOVEN WIRE FENCE INCLUDES ALL STRANDS OF BARBED WIRE SHOWN AT TOP OF AND AT BOTTOM OF WOVEN WIRE FENCE.

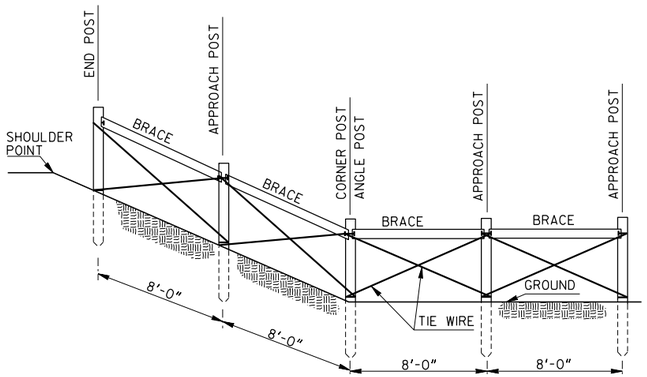

DETAIL OF FENCE BRACING WHEN APPROACHING FILL SLOPE OR ON ANGLE GREATER THAN 15°

TIMBER POST FENCE DETAILS

NOTE:
ALL DIMENSIONS ARE MINIMUM UNLESS OTHERWISE NOTED.

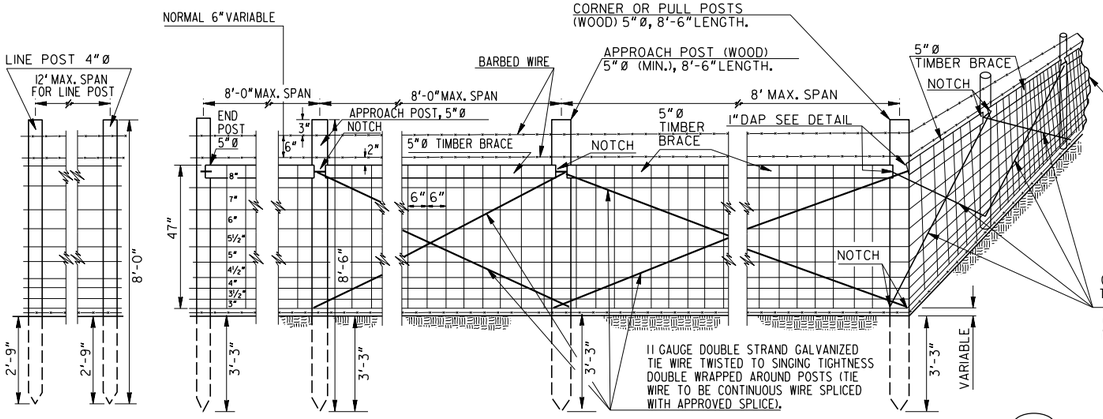

STEEL POST FENCE DETAILS

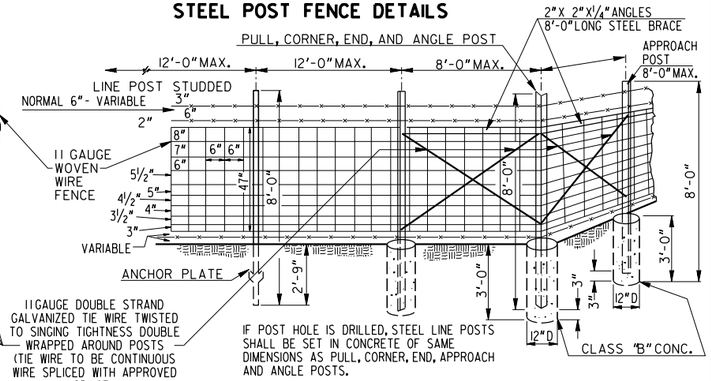

GENERAL NOTES:

1. FENCE MAY BE ANGLED TO EDGE OF CULVERTS AS SHOWN ON THE PLANS OR AS DIRECTED BY THE ENGINEER. THE DESIGNATION OF THIS DETAIL ON THE PLANS WILL BE ON THE BASIS OF A SAFETY EVALUATION.
2. A CHANGE IN TYPE MATERIAL FOR LINE POST CONSTRUCTION WILL ONLY BE ALLOWED AT NATURAL BREAKS IN THE FENCE LINE SUCH AS GRADE SEPARATIONS, INTERCHANGES, AND BRIDGES.

TIMBER POST NOTES:

1. DIMENSIONS SHOWN AS DIAMETERS OF ROUND POSTS ALSO APPLY TO EDGE WIDTH OF SQUARE POSTS.
2. AT ABRUPT CHANGES IN GRADE, STAPLE EVERY LINE WIRE.
3. TIMBER POSTS TO BE SET BY DRIVING OR DRILLING POST HOLES.
4. USE 9 GAUGE GALVANIZED STAPLES 1#2" LONG FOR TIMBER POSTS AT APPROACH POST, STAPLE EVERY LINE WIRE IN TOP HALF AND ALTERNATE LINE WIRES IN BOTTOM HALF, SEE STAPLING DETAIL.
5. ALL TIMBER POSTS AND BRACING ARE TO BE SEASONED AND PRESERVATIVE TREATED IN ACCORDANCE WITH SECTION 863 OF THE STANDARD SPECIFICATIONS.
6. THE CONTRACTOR WILL BE ALLOWED TO SUBSTITUTE 4 INCH NOMINAL DIMENSION LINE POSTS FOR THE DETAILS.
7. STUDDED STEEL "T" LINE POSTS MAY BE USED WITH WOODEN PULL, CORNER, END, APPROACH, AND ANGLE POSTS.
8. SQUARE WOODEN LINE POSTS CAN BE USED IN COMBINATION WITH ROUND WOODEN PULL, CORNER, END, APPROACH, AND ANGLE POSTS.

STEEL POST NOTES:

1. SET PULL, CORNER, END AND APPROACH POST IN CONCRETE.
2. SECURE EVERY LINE WIRE AT STEEL CORNER, END, ANGLE AND PULL POSTS AT STEEL LINE POSTS FASTEN EVERY LINE WIRE IN TOP HALF OF FENCE, ALTERNATE LINE WIRES IN BOTTOM HALF.

DETAIL OF TRENCHING FOR FENCE ON SLOPE

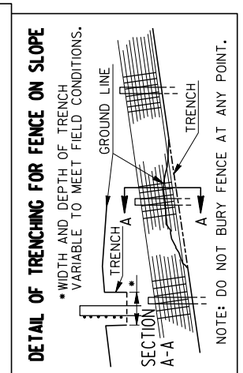

ALWAYS PUT THE WIRE ON THE OUTSIDE OF THE POST ON THE CURVE SO THAT IT PULLS AGAINST THE FENCE POSTS.

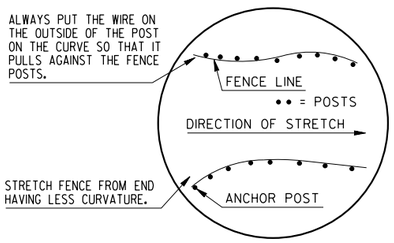

DETAIL OF CONTOUR FENCING

METHOD OF PLACING END POST IN FENCE LINE AT BRIDGE END

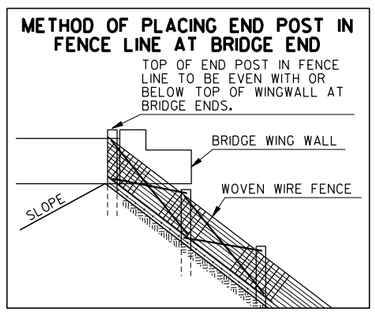

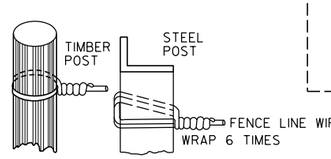

METHOD OF SECURING WIRE STRANDS OF FENCE AT END CORNER ANGLE AND PULL POST

PULL, CORNER, END, APPROACH, AND ANGLE POSTS

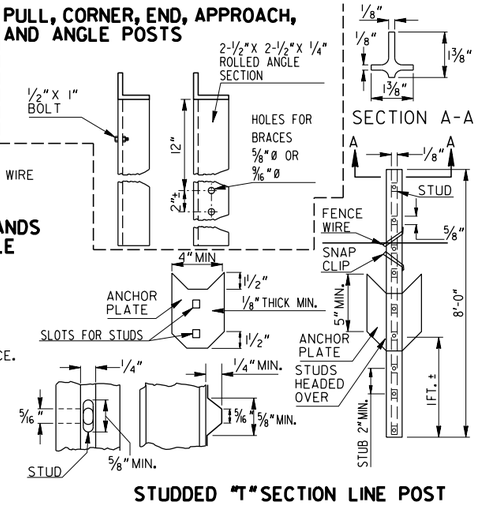

THESE STAY WIRES TO BE REMOVED FENCE TO BE SECURED WITH APPROVED SPLICE.

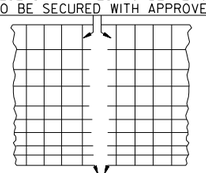

END OF ROLL

STUDDED "T" SECTION LINE POST

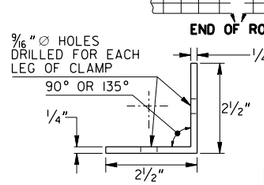

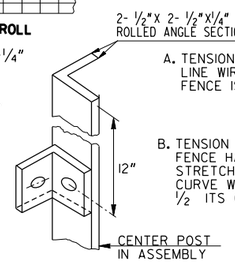

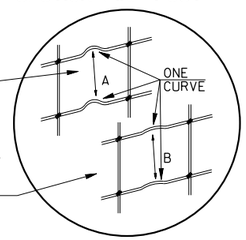

DETAIL OF TENSION CURVE

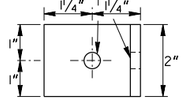

DETAIL OF CLAMP TO BE USED WITH ANGLE & PULL ASSEMBLES WHERE STEEL POSTS ARE USED

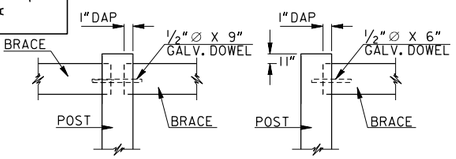

TIMBER BRACING DETAILS

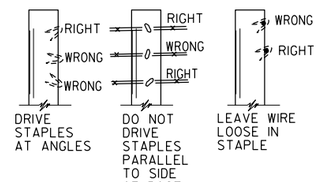

STAPLING DETAILS

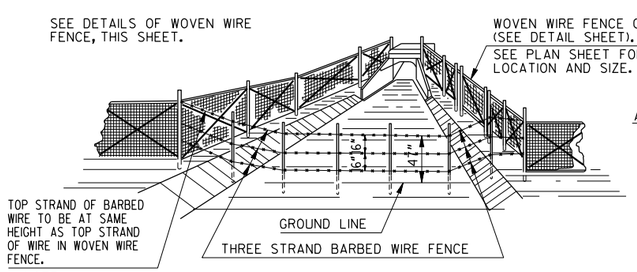

NOTE:
THIS FENCE IS TO BE USED AT LARGE PIPES AND CULVERTS WHERE A DISTINCT CHANNEL IS ENCOUNTERED EXCEPT WHERE THE CULVERT HAS BEEN APPROVED AS A CATTLE PASS.

DETAIL SHOWING PLACEMENT OF THREE STRAND BARBED WIRE FENCE

NOTE:
THREE STRAND BARBED WIRE FENCE IS NOT INTENDED FOR GENERAL USE AS PASTURE FENCING. SEE CONSTRUCTION DETAILS FOR FOUR AND FIVE STRAND BARBED WIRE FENCE WHERE NEEDED.

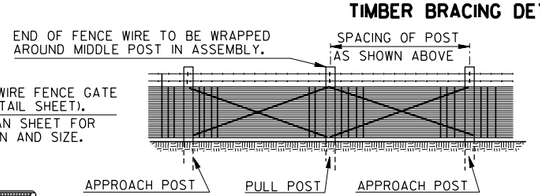

PULL POST ASSEMBLY

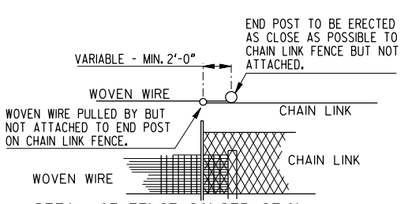

DETAIL OF FENCE CONSTRUCTION AT TYPE CHANGE

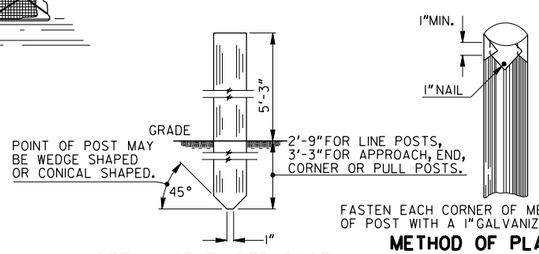

DETAIL OF TIMBER POST

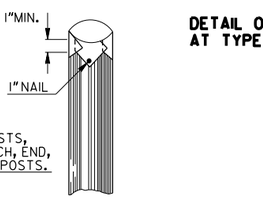

FASTEN EACH CORNER OF METAL CAP TO SIDE OF POST WITH A 1" GALVANIZED ROOFING NAIL.

METHOD OF PLACING METAL CAP ON WOODEN FENCE POSTS

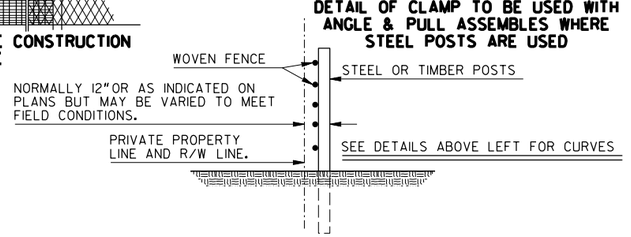

SKETCH INDICATING FENCE LOCATION AT SECTIONS OF NO FRONTAGE ROADS (REFER TO DETAIL PLANS FOR LOCATION OF FENCING FOR PROJECTS WITH FRONTAGE ROADS).

BY	REVISION	DATE
R.M.U.	GENERAL REVISION	3-10-88
R.M.U.	ADDED PAYMENT NOTE	12-2-77

DEPARTMENT OF TRANSPORTATION
STATE OF GEORGIA

CONSTRUCTION DETAIL

WOVEN WIRE FENCE

SEPTEMBER 1976
NOT TO SCALE

NUMBER
F-01

GDOT Georgia Department of Transportation | P. I. No. XXXXXXX

NOTE:
WHERE CHAIN LINK WIRE FENCE HAS BARBED WIRE, GATE SHALL ALSO REQUIRE BARBED WIRE BUT WITH VERTICAL EXTENSION ARMS ON THE GATE AND GATE POST UNLESS SPECIFIED OTHERWISE.

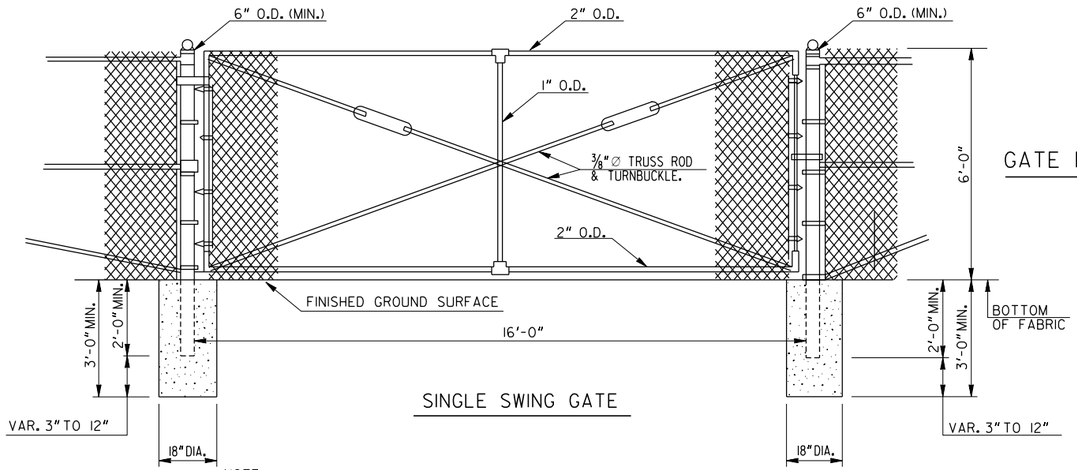

SINGLE SWING GATE

GATE FOR CHAIN LINK FENCE

NOTE:
FITTINGS INCLUDING HINGES AND LATCHES, FOR GATES SHALL MEET THE APPROVAL OF THE ENGINEER AND THE REQUIREMENTS OF THE SPECIFICATIONS.

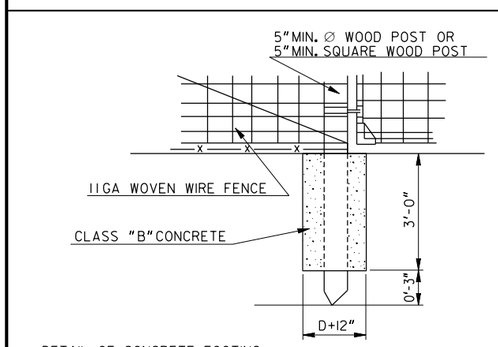

DETAIL OF CONCRETE FOOTING USING WOOD GATE POSTS FOR WOVEN WIRE FENCE

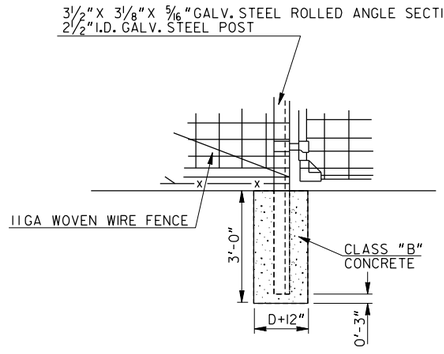

DETAIL OF CONCRETE FOOTING USING METAL GATE POSTS FOR WOVEN WIRE FENCE

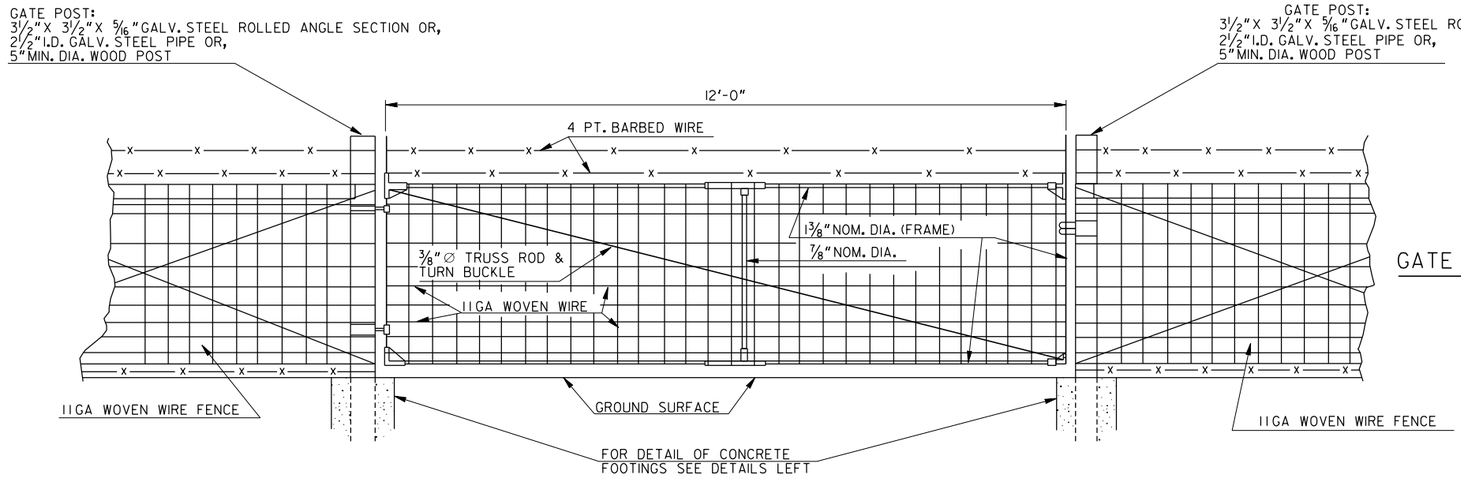

GATE FOR WOVEN WIRE FENCE

12 FT. SINGLE SWING GATE TO BE USED WITH WOOD POSTS OR METAL POSTS

GATE: (WOVEN WIRE FENCE)

1- 1 3/8"NOM. DIAMETER GALV. STEEL FRAME (12'X47")
2- 7/8"NOM. DIAMETER GALV. STEEL CENTER BRACE
3- 3/8"Ø GALV. TRUSS-ROD & TURNBUCKLE
4- FABRIC IS TO BE WRAPPED AND TIED AROUND ENDS OF FRAME AND ATTACHED TOP AND BOTTOM WITH APPROVED FABRIC FASTENERS.
5- FITTINGS INCLUDING HINGES AND LATCHES, FORGATES SHALL MEET THE APPROVAL OF THE ENGINEER AND THE REQUIREMENTS OF THE MATERIAL SPECIFICATIONS.

GATE POSTS: (WOVEN WIRE FENCE)

1- 3 1/2"X 3 1/2"X 5/16"GALV. STEEL ROLLED ANGLE SECTION OR 2 1/2"I.D. GALV. STEEL PIPE OR 5"MIN. DIAMETER (WOOD) OR 5"MIN. SQUARE (WOOD)
2- TYPE OF GATE POSTS TO BE USED IS SELECTED BY CONTRACTOR. WOOD GATE POSTS ARE TO BE USED IF CONTRACTOR ELECTS TO USE WOOD FENCE POSTS, METAL GATE POSTS IF CONTRACTOR ELECTS TO USE METAL FENCE POSTS.
3- GATE REMAINS AS SHOWN ON DETAIL FOR FENCE WITH WOOD POST OR FENCE WITH METAL POSTS.

DEPARTMENT OF TRANSPORTATION
STATE OF GEORGIA

CONSTRUCTION DETAIL

GATE DETAILS

FOR CHAIN LINK & WOVEN WIRE FENCE

DATE | REVISION | BY

JANUARY 1988
NOT TO SCALE

NUMBER F-02

GDOT Georgia Department of Transportation | P. I. No. XXXXXXX

FIELD FENCE BARBED WIRE-TYPICAL DETAILS

3 - STRAND

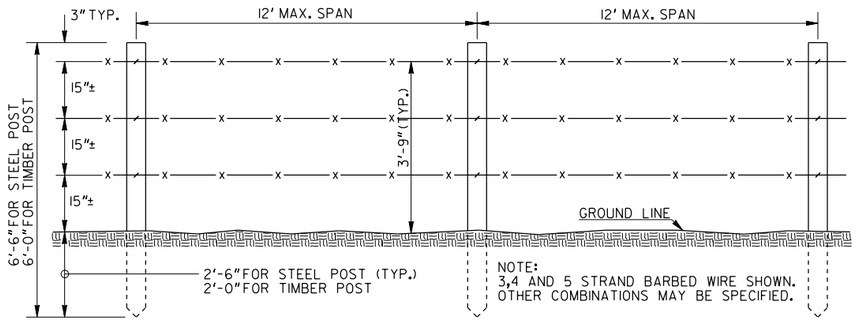

4 - STRAND

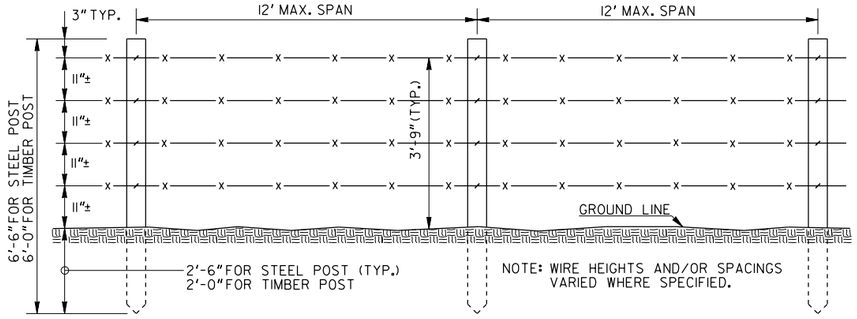

5 - STRAND

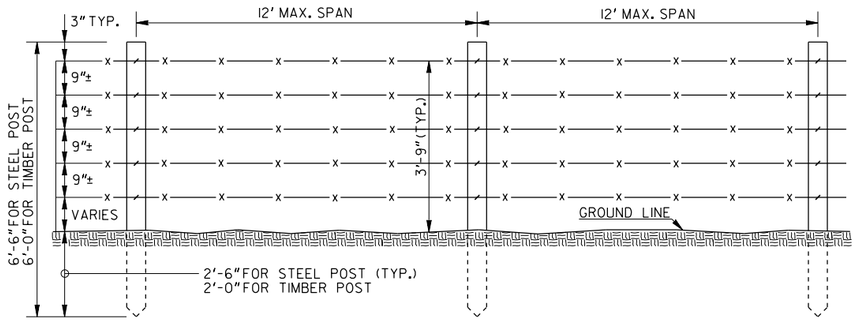

FIELD FENCE WOVEN WIRE-TYPICAL DETAILS

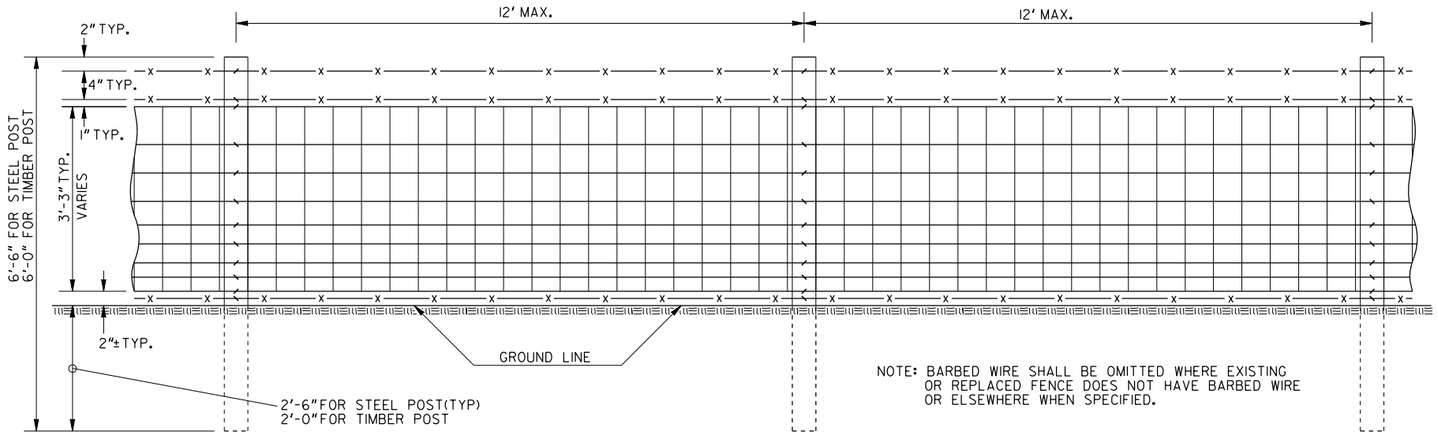

CORNER POST DETAIL
(ALTERNATE MAY BE APPROVED BY THE ENGINEER)

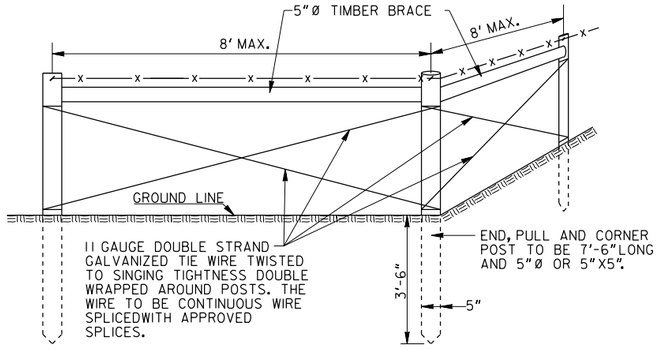

NOTE: BRACING FOR END AND PULL POST
SHALL BE THE SAME AS ABOVE.

GENERAL NOTES:

1. FENCE DESIGN NUMBERS (ASTM-A116) ARE DESIGNATED IN THE FILL-OUT BOX TO APPROXIMATE EXISTING OR REPLACED FENCING. ASTM-A116, DESIGN NO. 939-6-12½ (i.e. 9 HORIZONTAL WIRES, 39" HEIGHT, 6" STAY WIRE SPACING, 12½" GAGE WIRE FABRIC) SHALL BE USED WITH 3 STRANDS OR BARBED WIRE WHERE OTHER DESIGNS ARE NOT SPECIFIED.
2. CORNER AND PULL POST SHALL BE TREATED TIMBER 5"Ø OR NOMINAL 5"X5". LINE POST MAY BE EITHER TREATED TIMBERS 3"Ø OR NOMINAL 4"X4"OR STEEL. IF STEEL POST ARE USED, THEY WILL BE 1.3± LBS./FT. STUDDED "T"POST, EITHER GALVANIZED OR PAINTED, WITH AN APPROVED ANCHOR PLATE. (4"X4½"TYP.)
3. MATERIALS SHALL BE THE KIND THAT CAN BE PURCHASED AT A HARDWARE OR FARM SUPPLY STORE AND SHALL MEET THE APPROVAL OF THE ENGINEER. MATERIALS DO NOT HAVE TO BE INSPECTED OR APPROVED BY D.O.T. OFFICE OF MATERIASL AND RESEARCH, UNLESS THE ENGINEER REQUEST. CONCRETE FOOTINGS ARE NOT REQUIRED.
4. DETAILS MAY DIFFER FROM THAT SHOWN IN ORDER TO MATCH EXISTING OR REPLACED FIELD FENCING OR WHEN SO SPECIFIED.

SPECIAL NOTE:

THESE DETAILS ARE FOR USE IN REPLACEMENT FENCING OUTSIDE THE R/W OR FOR TEMPORARY FENCING (PROVIDED THE MATERIALS ARE NOT REUSED FOR PERMANENT FENCING INSIDE THE R/W.)

✳ SEE GENERAL NOTE NO. 1

FENCE LOCATION	FIELD FENCE WOVEN WIRE ✳								FIELD FENCE BARBED WIRE	LINEAR FT. OF FENCE
	FENCE FABRIC ASTM-A116 DESIGN NO.	FENCE FABRIC					STRANDS OF BARBED WIRE WITH FENCE			
		NO. OF HORIZONTAL WIRES	FABRIC HEIGHT (INCHES)	SPACINGS STAY WIRES (INCHES)	WIRE GAGES				NO. OF STRANDS	
					INTERMED, LINE AND STAY WIRES	TOP AND BOTTOM	TOP	BOTTOM		

DATE	REVISION	BY
02-08-88	REV. POST REQMTS.	R.M.U.

DEPARTMENT OF TRANSPORTATION
STATE OF GEORGIA

CONSTRUCTION DETAIL

TYPICAL DETAILS FOR FIELD FENCING

(FIELD FENCE WOVEN WIRE & FIELD FENCE BARBED WIRE)

SEPTEMBER 1983
NOT TO SCALE

NUMBER
F-04

GDOT Georgia Department of Transportation | P. I. No. XXXXXXX

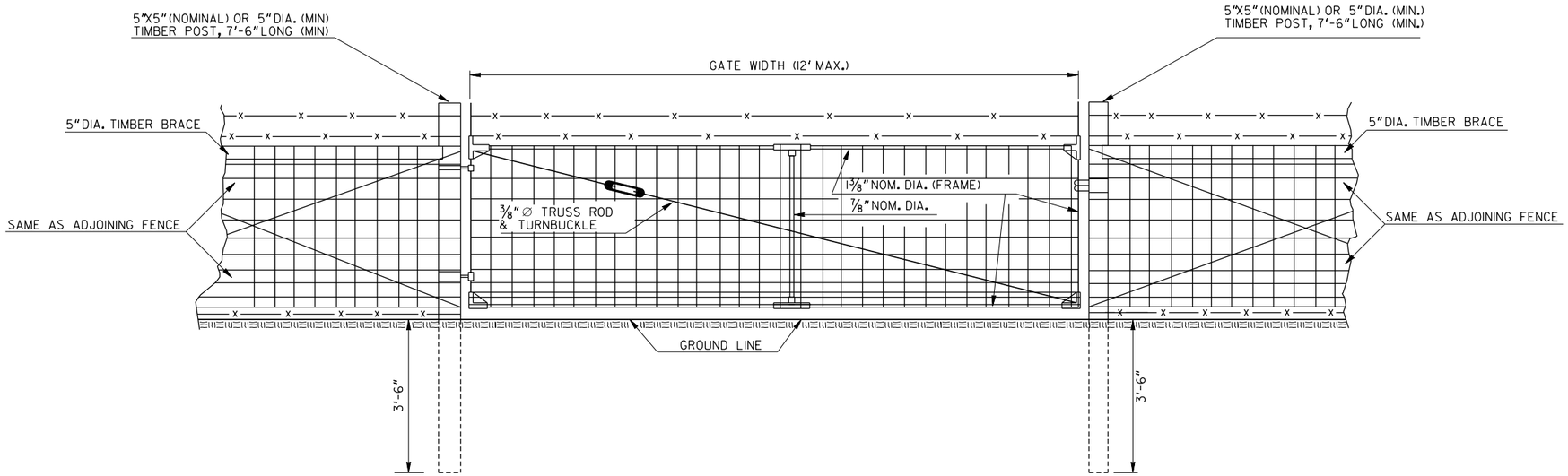

GATE LOCATION	GATE WIDTH	FENCE DESIGN

GATE:

1. 1⅜" NOM. DIAMETER GALV. STEEL FRAME
2. ⅞" NOM. DIAMETER GALV. STEEL CENTER BRACE
3. ⅜" ∅ GALV. TRUSS-ROD & TURNBUCKLE
4. FABRIC IS TO BE WRAPPED AND TIED AROUND ENDS OF FRAME AND ATTACHED TOP AND BOTTOM WITH APPROVED FABRIC FASTENERS.
5. FITTINGS, INCLUDING HINGES AND LATCHES FOR GATES, SHALL MEET THE APPROVAL OF THE ENGINEER.
6. FABRIC FOR GATE SHALL BE SAME AS ADJOINING FENCE FABRIC WHERE APPICABLE. WHERE FIELD FENCE IS BARBED WIRE, THE FABRIC FOR THE GATE SHALL BE ASTM-116 DESIGN NO. 939-6-12½ (OR DESIGN NO. 1047-6-12½ ALTERNATE).

BY	REVISION	DATE
R.M.U.	MINIMUM POST LENGTH	03-10-88
R.M.U.	GENERAL REVISION	01-17-86

DEPARTMENT OF TRANSPORTATION
STATE OF GEORGIA

CONSTRUCTION DETAIL

DETAIL OF GATE

TO BE USED WITH FIELD FENCE

OCTOBER 1983
NOT TO SCALE

NUMBER
F-05

DETAIL
REMOVED

GDOT Georgia Department of Transportation | P. I. No.

NOTE: PLAN & ELEVATION VIEWS ARE SHOWN AS TYPICAL AND MAY VARY PER THE MANUFACTURER'S RECOMMENDATIONS AND IN ACCORDANCE WITH THE REQUIREMENTS OF SECTION 648.

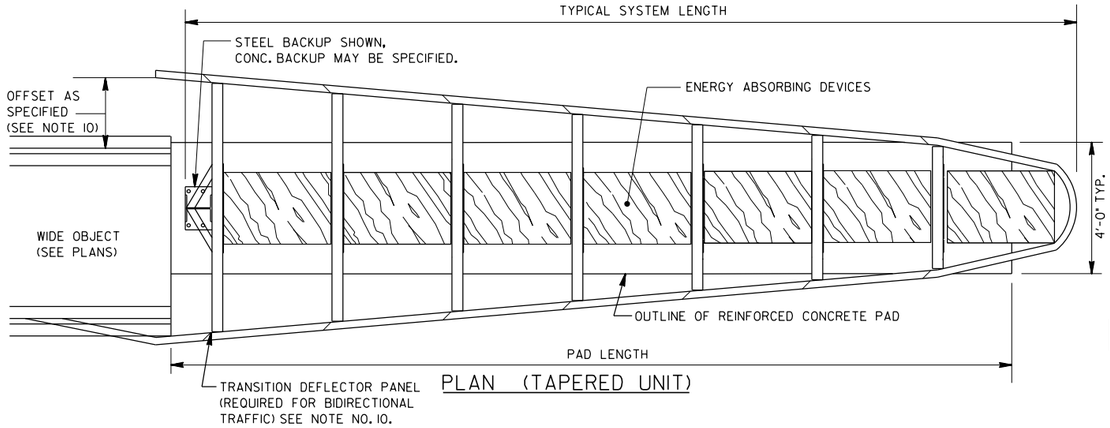

PLAN (TAPERED UNIT)

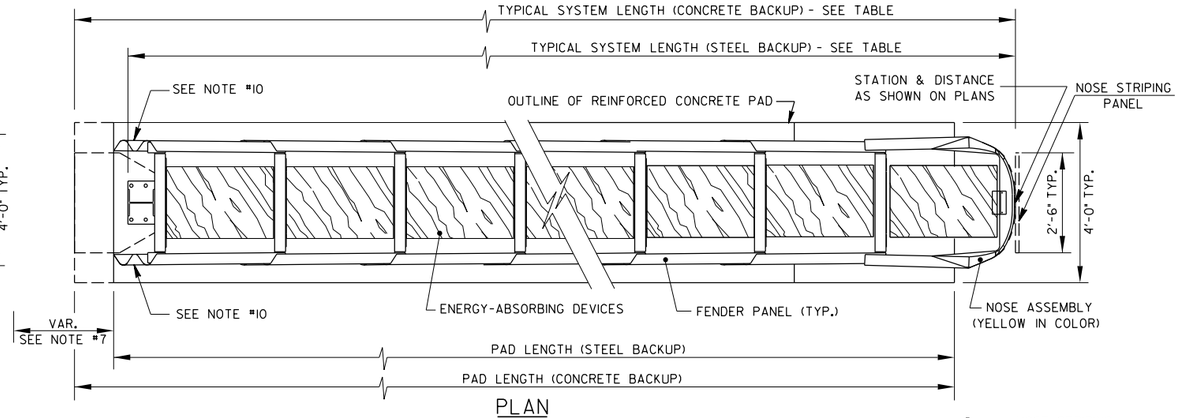

PLAN

IMPACT ATTENUATOR LENGTHS				
TYPE		MASH TEST LEVEL	DESIGN SPEED	SYSTEM LENGTH
P	REUSABLE	TL-3	ANY	23'-11¼"
		TL-2	≤ 45 MPH	20'-9⅜"
S	LOW-MAINTENANCE AND/OR SELF-RESTORING	TL-3	ANY	27'-1"
		TL-2	≤ 45 MPH	13'-8¼"

THE LENGTHS IN ABOVE TABLE ARE COMMON OVERALL APPROXIMATE LENGTHS. VARIATIONS MAY BE SUBMITTED FOR APPROVAL. SEE SUB-SECTION 648.3.05

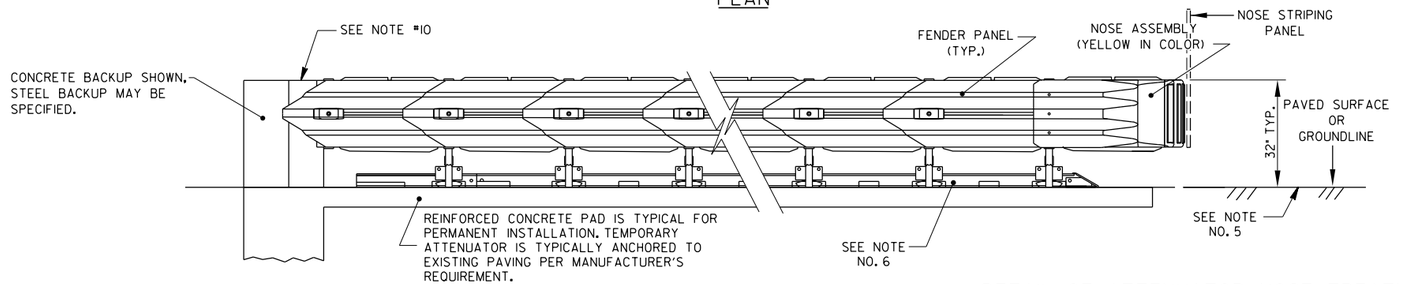

ELEVATION

DETAIL OF ATTENUATOR NOSE TREATMENT

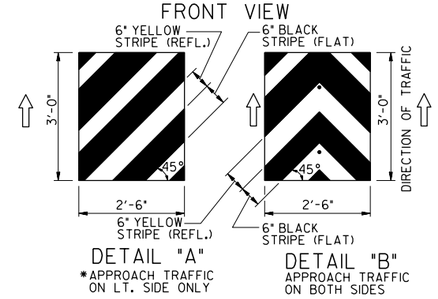

* STRIPES SHALL SLOPE DOWNWARD AT AN ANGLE OF 45 TOWARD THE SIDE ON WHICH TRAFFIC IS TO PASS. LEFT SHOWN, RIGHT NOT SHOWN, BUT MAY BE SPECIFIED.
THE 6" YELLOW STRIPES SHALL BE REFLECTIVE SHEETING, TYPE IX.
THE 6" BLACK STRIPES SHALL BE FLAT (NON-GLOSS) PAINT OR ANY OTHER APPROVED APPLICATION.
COLORS SHALL BE ACCORDING TO THE MUTCD.
STRIPING SHALL BE APPLIED TO A 0.04" THICK ALUMINUM PLATE.
OBJECT MARKER SHALL BE SECURED TO NOSE FRONT WITH THREE GALVANIZED 5/16" DIA. BOLTS WITH NUT AND WASHERS AS DIRECTED BY THE ENGINEER.

TRAFFIC FLOW DESIGNATIONS (TYP.)

SEE SUB-SECTION 648.3.04

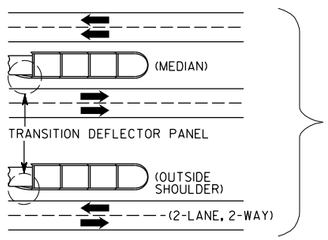

ON BOTH SIDES OF UNIT

BI-DIRECTIONAL (B)
OPPOSITE DIRECTIONS SEE NOTE *11

ON ONE SIDE OF UNIT

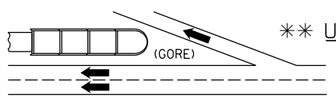

** UNI-DIRECTIONAL (U)
TRAFFIC IN SAME DIRECTION ON BOTH SIDES

** LOCATED OUTSIDE OF OPPOSING TRAFFIC'S CLEAR ZONE

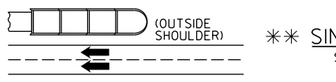

** SINGLE DIRECTION (S)
SINGLE SIDE ONLY EXPOSED TO TRAFFIC

NOTE: WHEN ORDERING ATTENUATOR, TRAFFIC FLOW SHALL BE SPECIFIED FOR EACH UNIT AS "U", "S" OR "B". SEE SECTION 648 FOR ADDITIONAL DESCRIPTION.

GENERAL NOTES

1. SPECIFICATIONS: GEORGIA STANDARD, CURRENT EDITION AND SUPPLEMENTS THERETO. SEE SECTION 648.
2. ALL ATTENUATORS WILL BE OF TYPE WHICH HAS BEEN APPROVED BY THE GA. D.O.T. AND FEDERAL HIGHWAY ADMINISTRATION AS MEETING AASHTO MANUAL FOR ASSESSING SAFETY HARDWARE (MASH) REQUIREMENTS AND HAS BEEN CLASSIFIED AS "ACCEPTED" BY THE GDOT OFFICE OF MATERIALS AND RESEARCH AND LISTED ON QPL 64.
3. THE WIDTH OF THE SYSTEM SHALL BE 2'-0" UNLESS SPECIFIED OTHERWISE. UNITS HAVING A REAR WIDTH LESS THAN THE BASE OF THE SHIELDED OBJECT SHALL REQUIRE A CONCRETE TRANSITION, EXCEPT WHERE THE UNIT IS LOCATED ON THE OUTSIDE SHOULDER.
4. WHERE OBJECT BEING SHIELDED IS WIDER THAN THE DESIGNATED ATTENUATOR WIDTH, A TRANSITION WILL BE REQUIRED EITHER (a) BY PROVIDING A SPECIAL DESIGN CONCRETE TAPERED TRANSITION (SEE SEPARATE DETAILS) AS PART OF THE BACK-UP SYSTEM OR (b) BY MATCHING ATTENUATOR REAR WIDTH TO OBJECT SIZE UTILIZING A TAPERED ATTENUATOR MODEL WHICH INCREASES IN WIDTH FROM NOSE TO REAR (PER MANUFACTURER'S TAPERED MODEL NO.) WITH A STANDARD BACK-UP UNIT.
5. CROSS SLOPE OF PAD SHALL NOT EXCEED 8% AND NOT VARY MORE THAN 2% FROM FRONT TO BACK. THE ATTENUATOR SYSTEM SHALL BE LOCATED ON A RELATIVE FLAT AREA CLOSE TO OR AT ROADWAY LEVEL.
6. ALL ATTENUATOR UNITS SHALL BE CORRECTLY ANCHORED TO REINFORCED CONCRETE PAD OR OTHER APPROVED PAVED SURFACE PER MANUFACTURER'S RECOMMENDATIONS.
7. THE AREA IMMEDIATELY BACK OF THE ATTENUATOR SHALL BE CLEAR OF OBSTRUCTIONS THAT WOULD PREVENT THE REAR PANELS FROM SLIDING BACKWARD UPON IMPACT FOR A DISTANCE AS RECOMMENDED BY THE MANUFACTURER.
8. PAYMENT FOR IMPACT ATTENUATOR OF THE TYPE SPECIFIED SHALL INCLUDE THE ENTIRE UNIT WITH ALL ACCESSORIES, THE CONCRETE PAD, THE BACKUP SYSTEM, ANY TRANSITION REQUIRED, THE NOSE STRIPING PANEL WITH ALL MATERIALS AND LABOR NECESSARY TO COMPLETE THE SYSTEM.
9. BEFORE WORK BEGINS, THE CONTRACTOR SHALL OBTAIN THE MANUFACTURER'S INSTALLATION MANUAL, ASSEMBLY DETAILS, ANCHORING REQUIREMENTS, REINFORCING STEEL FOR CONCRETE RECOMMENDATIONS, AND ALL OTHER GUIDES AND INSTRUCTIONS NECESSARY FOR PROPER INSTALLATION AND PROVIDE COPIES OF SAME TO THE ENGINEER. THE CONTRACTOR SHALL INFORM THE MANUFACTURER OF ATTENUATOR OF SITE CONDITIONS INCLUDING FURNISHING ANY PLAN SHEETS OR SKETCHES AS NEEDED TO SHOW TRAFFIC FLOW DIRECTIONS, LOCATION AND DESIGN OF SHIELDED OBJECT, AND AVAILABLE ARES SIZE FOR LOCATION OF UNIT.
10. TO PREVENT VEHICLE SNAGGING, AN OFFSET AND/OR A TRANSITION DEFLECTION PANEL OR A CONCRETE TRANSITION SECTION IS REQUIRED AT ATTENUATOR REAR ON EACH SIDE SUBJECT TO TRAFFIC. SEE MANUFACTURER'S REQUIREMENTS.
11. FOR BIDIRECTIONAL TRAFFIC, ON OPPOSING TRAFFIC SIDE, A TRANSITION DEFLECTION PANEL AT ATTENUATOR REAR IS REQUIRED, PER MANUFACTURERS SPECIFICATIONS, TO PREVENT VEHICLE FROM SNAGGING. OFFSET PLACEMENT OR THE USE OF A CONCRETE BARRIER TRANSITION SECTION MAY ALSO APPLY PER MANUFACTURER'S REQUIREMENTS.
12. IMPACT ATTENUATORS SHALL ONLY BE ATTACHED TO CONCRETE BARRIER. OTHER CONNECTIONS REQUIRE APPROVAL FROM THE STATE DESIGN POLICY ENGINEER.

PN	BY	DATE	REVISION
	GLO	04-10-06	REV. REFLECTIVE SH. TYPE
GLO		07-21-11	REV. TITLE BLOCK AND AND GENERAL NOTE 1 AND 2.
		07-01-26	REV. IMP. ATT. LENGTH TBL. TRAF. FL. DES & ADD GN #'s 11, 12

DEPARTMENT OF TRANSPORTATION
STATE OF GEORGIA

CONSTRUCTION DETAIL

IMPACT ATTENUATOR

TYPE P - - - } SUB-SEC. 648.3.04
TYPE S - - - }

REV. AND REDR. MAR. 2001
NOT TO SCALE

NUMBER G-11

STATE	PROJECT NUMBER	SHEET NO.	TOTAL SHEETS
GA.			

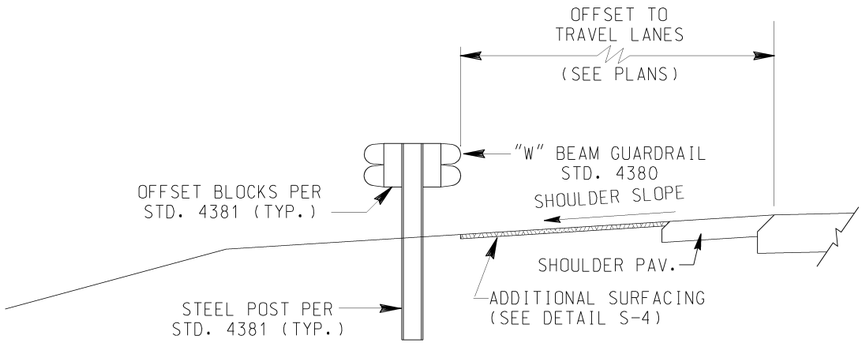

SECTION A-A

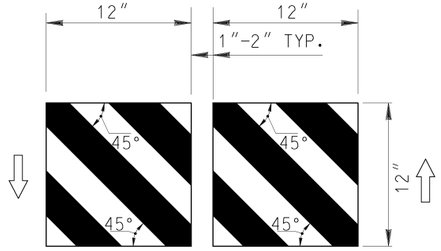

TYPICAL FOR MEDIAN
(BI-DIRECTIONAL TRAFFIC)

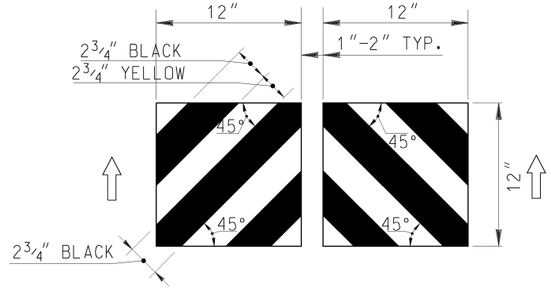

TYPICAL FOR GORE AREA
(UNI-DIRECTIONAL TRAFFIC)

SEE PLANS FOR DETAILS OF SHOULDER GRADING, SHOULDER PAVING AND ADDITIONAL SURFACING WHERE SPECIFIED.

NOSE STRIPING DETAILS

NOTE: BLACK GLOSS DURABLE INK PRINTED ON TYPE IX REFLECTIVE SHEETING

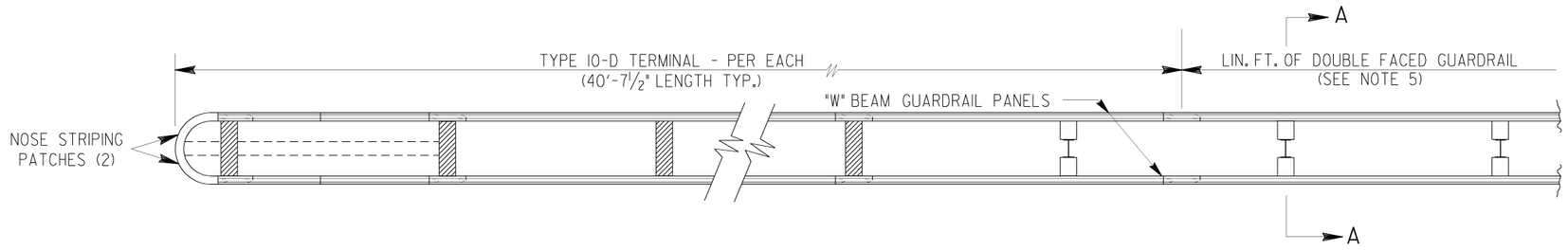

PLAN

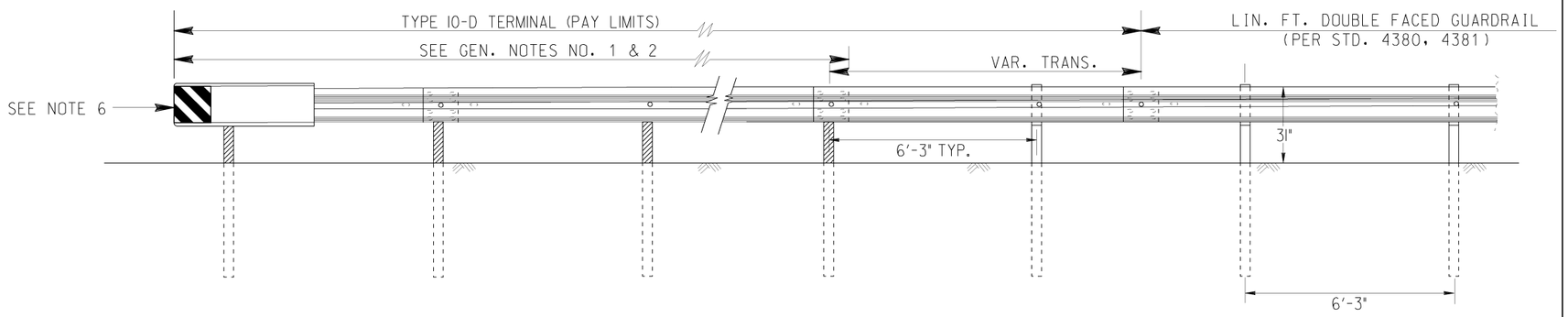

ELEVATION

GENERAL NOTES

1. GUARDRAIL TERMINAL TYPE 10-D SHALL BE A DOUBLE FACED GUARDRAIL TYPE TERMINAL WHICH HAS BEEN APPROVED BY FEDERAL HIGHWAY ADMINISTRATION AS MEETING THE REQUIREMENTS OF NCHRP-350 AND/OR MASH, TL-3 AND LISTED UNDER QPL 64. THE CONTRACTOR SHALL OBTAIN A LETTER OF APPROVAL AND FURNISH SAME TO THE PROJECT ENGINEER.
2. TYPE 10-D TERMINAL HEREHOWN IS TYPICAL REPRESENTATION OF APPROVED MODEL NUMBERS. ACTUAL DETAILS SHALL BE ACCORDING TO MANUFACTURER'S RECOMMENDATIONS. THE CONTRACTOR SHALL OBTAIN THE MANUFACTURER'S PARTS LISTS, INSTALLATION INSTRUCTIONS, CONSTRUCTION DETAILS, NOTES, SPECIFICATIONS, ETC. AS NEEDED TO COMPLETE THE ITEM AND FURNISH COPIES OF THE SAME FOR THE ENGINEER PRIOR TO BEGINNING INSTALLATION.
3. IF SAME TERMINAL TYPE IS NOT APPROVED FOR BOTH BI-DIRECTIONAL AND UNI-DIRECTIONAL TRAFFIC FLOW, THE CONTRACTOR MUST INFORM THE MANUFACTURER OF THE TRAFFIC FLOW CHARACTERISTICS AT EACH TERMINAL SITE WHEN ORDERING THE UNITS.
4. TYPE 10-D TERMINAL SHALL BE NON-FLARED AND INSTALLED PARALLEL TO THE DIRECTION OF MAINLINE TRAFFIC FLOW UNLESS OTHERWISE RECOMMENDED BY THE MANUFACTURER AND APPROVED BY THE ENGINEER.
5. THE LENGTH OF THE CONNECTING DOUBLE FACED GUARDRAIL SHALL BE AS SHOWN ON THE PLANS AND/OR AS DIRECTED BY THE ENGINEER. HOWEVER, THIS LENGTH SHALL NOT BE LESS THAN THAT RECOMMENDED BY THE MANUFACTURER FOR THE APPROVED MODEL USED. LINEAR FEET OF DOUBLE FACED GUARDRAIL SHALL BE ACCORDING TO CURRENT GEORGIA STANDARDS FOR GUARDRAIL HARDWARE, POSTS, OFFSET BLOCKS, ETC.
6. EACH TYPE 10-D TERMINAL SHALL REQUIRE TWO (2) NOSE STRIPING PATCHES AS AN INCIDENTAL PART OF THE TERMINAL. THE PATCHES MAY BE OBTAINED FROM THE SAME OR DIFFERENT SUPPLIER THAN THE TERMINAL UNIT.
7. TRANSITION SECTION SHALL CONSIST OF STANDARD DOUBLE FACED GUARDRAIL COMPONENTS (STD. 4380, 4381) EXCEPT AS OTHERWISE RECOMMENDED BY THE MANUFACTURER.
8. REFLECTORIZED WASHERS (STD. 4360 TYP.) SHALL NOT BE INSTALLED WITHIN LIMITS OF TYPE 10-D TERMINAL, BUT SHALL BEGIN AT THE INTERMEDIATE POST (SEC. A-A) AND CONTINUE FOR THE LENGTH OF DOUBLE FACED GUARDRAIL.

ITEM NO.	UNITS	DESCRIPTION
641-6005	EA	GUARDRAIL TERMINAL, TP 10D - 31"

DATE	REVISION	BY

DEPARTMENT OF TRANSPORTATION
STATE OF GEORGIA

CONSTRUCTION DETAIL
GUARDRAIL TERMINAL TYPE 10-D
DOUBLE FACED GUARDRAIL TERMINAL
31 INCH GUARDRAIL HEIGHT

NO SCALE | 1-29-16

NUMBER
G-12A

STATE	PROJECT NUMBER	SHEET NO.	TOTAL SHEETS
GA.			

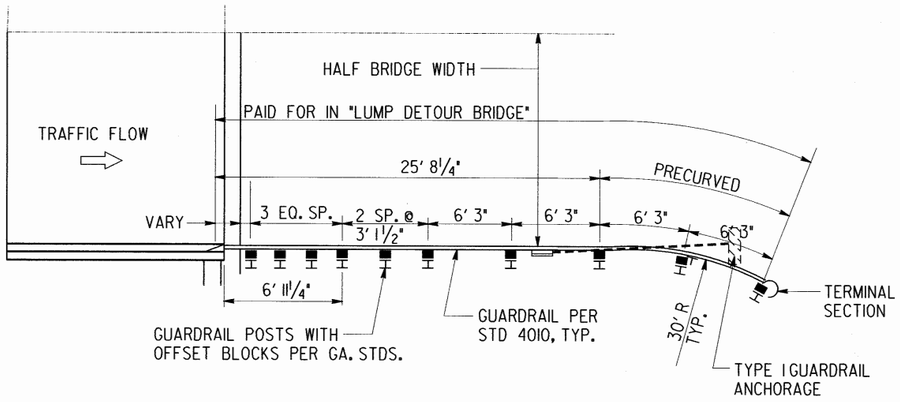

PLAN VIEW

ALTERNATE-TRAILING END ONLY

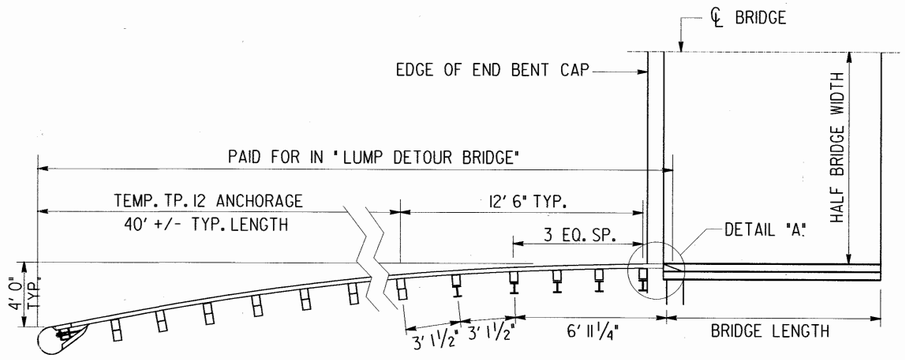

PLAN VIEW

GENERAL NOTES:

1. SEE SECTION 541 FOR DETOUR BRIDGES SPECIFICATIONS.

2. SEE STANDARD 4010 FOR DETAILS OF SPECIAL END SHOE, ½" GALV. STEEL PLATE, AND ALL BOLTS, NUTS AND WASHERS REQUIRED FOR CONNECTIONS PER DETAIL "A".

3. a) TEMPORARY TYPE 12 ANCHORAGES SHALL BE THE FLARED TYPE UNLESS OTHERWISE APPROVED BY THE ENGINEER. TYPE 12 ANCHORAGES SHALL BE IN ACCORDANCE WITH SUB-SECTION 641.03E.

   b) ALL OTHER GUARDRAIL COMPONENTS SHALL BE ACCORDING TO CURRENT GA. STANDARD DETAILS.

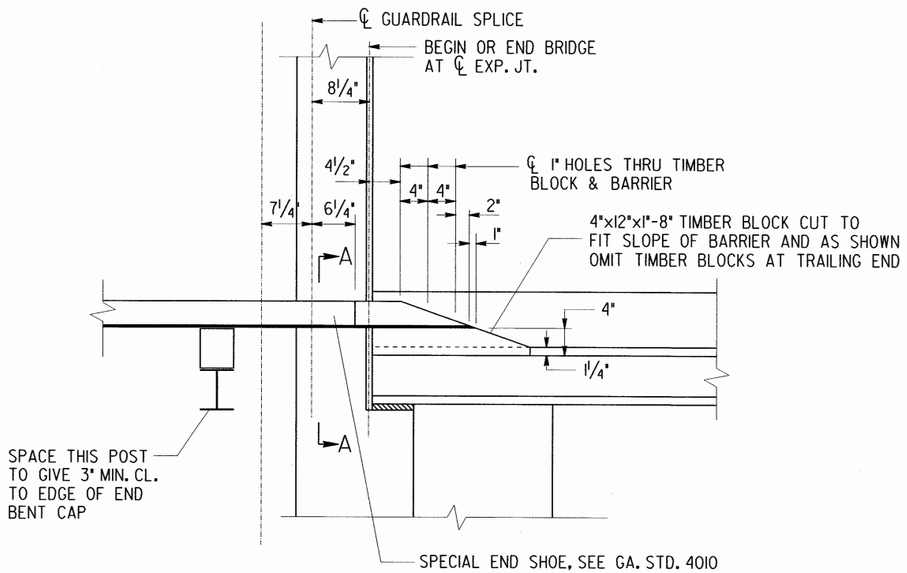

DETAIL "A"

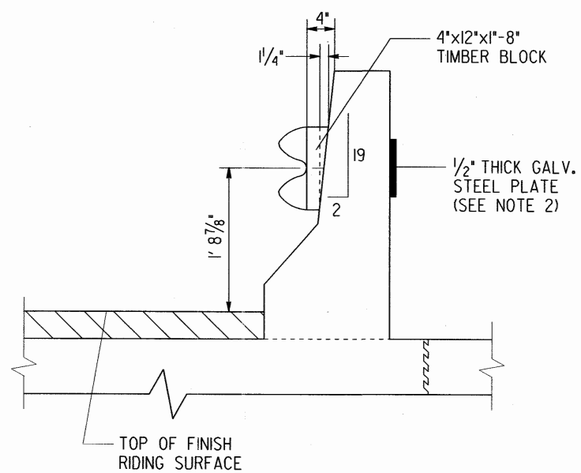

SECTION A-A

DEPARTMENT OF TRANSPORTATION
STATE OF GEORGIA

CONSTRUCTION DETAIL
GUARDRAIL AT
DETOUR BRIDGE ENDS
SEE SECTION 541

NO SCALE — AUGUST 2001

DATE | REVISION | BY

DESIGNED
TRACED
CHECKED
REVISED

NUMBER G-13

GDOT Georgia Department of Transportation | P. I. No.

ITS LEGEND

- PROPOSED 6' X 20' QUADRUPOLE DETECTOR LOOP
- PROPOSED 6' X 6' DETECTOR LOOP
- EXISTING CCTV CAMERA
- PROPOSED CCTV CAMERA
- EXISTING VIDEO DETECTION SYSTEM
- PROPOSED VIDEO DETECTION SYSTEM
- EXISTING RADAR DETECTION SYSTEM
- PROPOSED RADAR DETECTION SYSTEM
- EXISTING DMS ON SIGN BRIDGE STRUCTURE
- EXISTING DMS ON BUTTERFLY STRUCTURE
- PROPOSED DMS ON SIGN BRIDGE STRUCTURE
- PROPOSED DMS ON BUTTERFLY STRUCTURE
- O/H EXISTING OVERHEAD SIGN
- EXISTING WOOD POLE
- EXISTING STRAIN POLE
- PROPOSED TYPE IV STRAIN POLE
- PROPOSED MAST ARM STRAIN POLE
- PROPOSED PEDESTAL POLE
- EXISTING EXTENSION POLE
- PROPOSED EXTENSION POLE
- EXISTING AERIAL OR UNDERGROUND SERVICE POINT LOCATION
- PROPOSED AERIAL OR UNDERGROUND SERVICE POINT LOCATION
- EJB PROPOSED ELECTRICAL JUNCTION BOX
- EXISTING ELECTRICAL COMMUNICATION BOX
- PROPOSED ELECTRICAL COMMUNICATION BOX
- PROPOSED 3 SECTION TRAFFIC SIGNAL HEAD
- PROPOSED MAST ARM
- PB EXISTING PULL BOX
- PB PROPOSED PULL BOX

- EXISTING CABINET
- PROPOSED GROUND-MOUNTED CABINET
- PROPOSED POLE-MOUNTED CABINET (SHADED FACE IS REAR)
- PROPOSED GUARDRAIL
- EXISTING GUARDRAIL
- PROPOSED GUARDRAIL LEADING EDGE TREATMENT
- PROPOSED GUARDRAIL TRAILING EDGE TREATMENT
- C.B. EXISTING CATCH BASIN
- D.I. EXISTING DROP INLET
- PROPOSED ADVANCE WARNING FLASHER
- PROPOSED GROUND-MOUNTED SIGN
- EXISTING SIGN
- EXISTING BRIDGE ATTACHED CONDUIT DUCT BANK
- PROPOSED BRIDGE ATTACHED CONDUIT DUCT BANK
- EXISTING CONDUIT DUCT BANK
- PROPOSED CONDUIT DUCT BANK
- PROPOSED CONDUIT ROUTING
- DITCH LINE OR EDGE OF WATER
- EXISTING CONCRETE DITCH
- EXISTING EDGE OF PAVEMENT
- SOLID TRAFFIC STRIPE
- SKIP TRAFFIC STRIPE
- SKIP STRIPE (2' STRIPE, 6' GAP)
- WOODS LINE

DATE	DEPARTMENT OF TRANSPORTATION STATE OF GEORGIA	
REVISION	CONSTRUCTION DETAIL ITS-LEGEND	
BY	NOVEMBER 2020 NO SCALE	NUMBER ITS-01

			STATE	PROJECT NUMBER	SHEET NO.	TOTAL SHEETS
			GA			

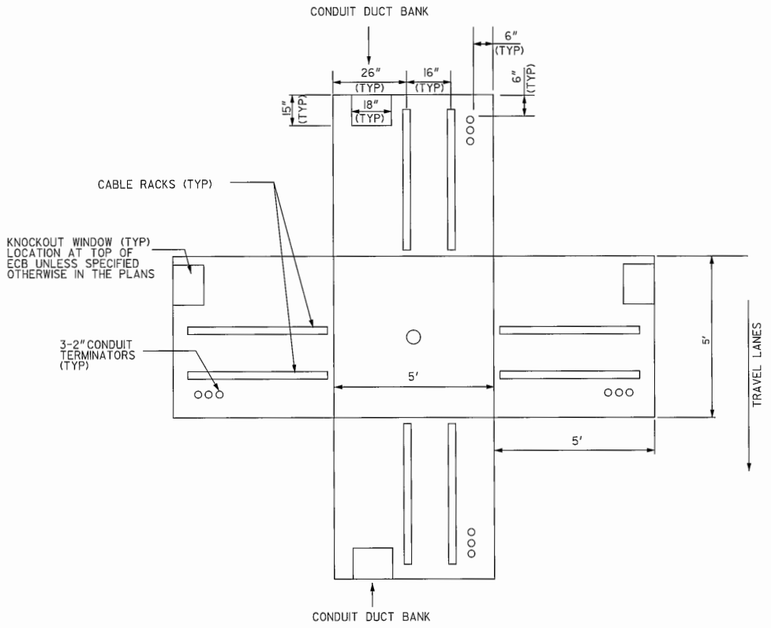

TYPE 5 ECB FEATURES - INSIDE WALLS

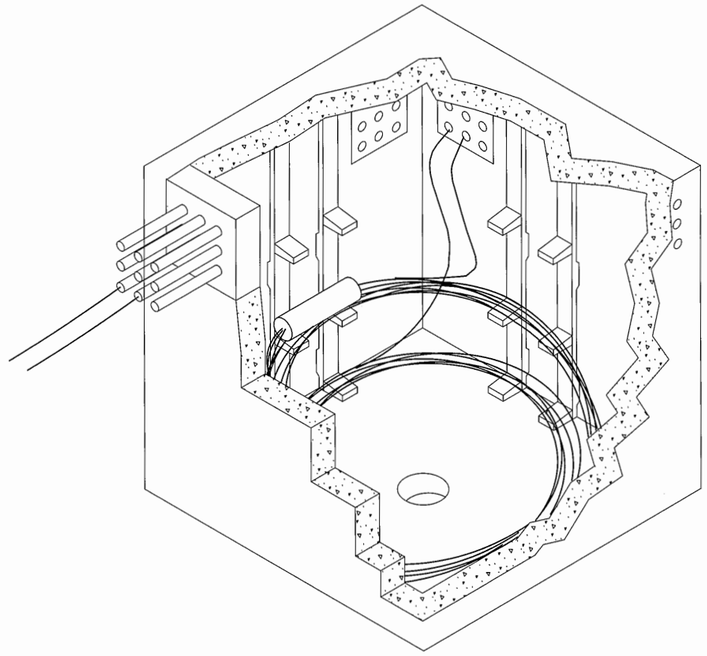

TYPICAL TYPE 5 ECB LAYOUT

REHABILITATION OF ECB'S

THE FOLLOWING REQUIREMENTS DEFINE THE WORK ASSOCIATED WITH PAY ITEM, ECB REHABILITATION (ALL TYPES).

ECB REHABILITATION (ALL TYPES) SHALL BE MEASURED BY UNIT, WORK COMPLETE, AND SHALL BE PAID FOR AT THE UNIT PRICE PER EACH ECB REHABILITATED AS DEFINED IN THE FOLLOWING REQUIREMENTS.

1) THE CONTRACTOR SHALL ESTABLISH THE LOCATION OF THE ECB, RECOGNIZING THAT THE MANHOLE MAY BE PAVED OVER.

2) THE MANHOLE LID SHALL BE OPENED, WHICH MAY INCLUDE USE OF POWER TOOLS TO ACCOMPLISH.

3) EXISTING CABLE COILS SHALL BE REMOVED FROM THE ECB TEMPORARILY ENSURING NO KINKS OR ABRASIONS

4) THE INTERIOR OF THE ECB SHALL BE CLEANED BY REMOVING ANY DEBRIS, TRASH, MUD, SILT, AND WATER.

5) ALL JOINTS AND SEAMS IN THE ECB SHALL BE RESEALED WITH A SILICONE SEALANT AS SPECIFIED IN SECTION 833.06, TYPE A.

6) APPROPRIATE CABLE RACKING, AS DEFINED BELOW, SHALL BE INSTALLED:

- RACK QUANTITY: 2 RACKS PER INSIDE WALL, FOR INSIDE WALL WIDTHS OF GREATER THAN OR EQUAL TO 36"; 1 RACK PER INSIDE WALL, FOR INSIDE WALL WIDTHS LESS THAN 36" OR GREATER THAN 24"; NO RACKS REQUIRED FOR INSIDE WALL WIDTHS LESS THAN OR EQUAL TO 24".
- SPACING BETWEEN SUCCESSIVE RACKS AND ECB CORNERS SHALL BE EQUAL.
- RACK HEIGHT: INSIDE HEIGHT OF ECB, MINUS 6"
- BOTTOM EDGE OF RACK TO BE INSTALLED NO GREATER THAN 3" FROM FLOOR OF ECB.
- RACKS TO BE INSTALLED DIRECTLY TO ECB WALL OR WITH SHORTEST STANDOFF BRACKET POSSIBLE. RACKS ARE TO BE INSTALLED USING THREADED ANCHORS INTO THE ECB WALLS.
- CABLE SUPPORT ARMS SHALL BE 7"TO 9"IN LENGTH AND SHALL HAVE PLASTIC OR CERAMIC INSULATORS.
- ALL CABLE RACKS, SUPPORT ARMS, AND HARDWARE SHALL BE MANUFACTURED FROM HOT-DIPPED GALVANIZED STEEL.

7) THE ECB RING AND LID ASSEMBLY SHALL BE RE-SET AT ACTUAL ROADWAY SURFACE ELEVATION.

8) ANY UNLABELED CABLING SHALL BE LABELED IN ACCORDANCE WITH LABELING REQUIREMENTS AS SET FORTH IN SECTION 935.

9) CORE CONDUIT ENTRY AND TERMINATE CONDUIT.

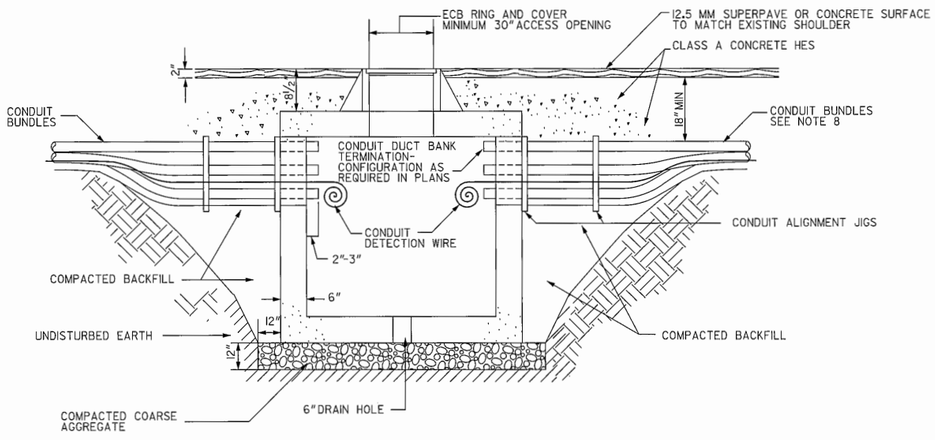

TYPE 5 ECB - TYPICAL INSTALLATION

GENERAL NOTES FOR ELECTRICAL COMMUNICATION BOX (ECB)

1. PRIOR TO ANY ECB WORK AND WITHIN 60 DAYS AFTER NOTICE TO PROCEED, THE CONTRACTOR SHALL SUBMIT CATALOG SHEETS AND ENGINEERING DRAWINGS FOR REVIEW BY THE ENGINEER. THE SUBMITTALS SHALL INCLUDE, BUT NOT BE LIMITED TO, THE ECB, RING AND COVER, CONDUIT TERMINATORS, CABLE RACKS AND HARDWARE, AND CONDUIT ALIGNMENT JIGS. NO WORK SHALL BE DONE USING THESE PRODUCTS UNTIL AFTER SUBMITTALS HAVE BEEN APPROVED BY THE ENGINEER.
2. ECB, TYPE 5, SHALL BE MEASURED BY UNIT, COMPLETE IN PLACE, AND SHALL BE PAID FOR AT THE UNIT PRICE PER EACH.
3. ECBS AND COVERS SHALL BE DESIGNED AND MANUFACTURED IN ACCORDANCE WITH ASTM C-857-95. THE ECB WALLS, FLOORS AND ROOF SHALL BE MINIMUM 6"THICKNESSES AND SHALL BE FORMED FROM 4500 PSI CONCRETE IN ACCORDANCE WITH GDOT SECTION 830. TYPE 5 ECBS SHALL BE MANUFACTURED AND INSTALLED IN ACCORDANCE WITH THE DETAILS SHOWN HERE AND THE PLANS. ALL JOINTS AND SEAMS IN THE BOXES CREATED FROM MANUFACTURE OR FINAL ASSEMBLY SHALL BE SEALED WITH MANUFACTURER-APPROVED SEALANT.
4. ECBS, TYPE 5, EACH WALL SHALL INCLUDE 1 KNOCKOUT WINDOW AND 3 CONDUIT TERMINATORS FOR NONMETAL, TYPE 3, 2"CONDUIT, AS SHOWN IN THE DETAILS. KNOCKOUT WINDOWS SHALL REMAIN SEALED UNLESS USED FOR CONDUIT DUCT BANK TERMINATION. CONDUIT INSTALLED INTO TERMINATORS SHALL BE SEALED WITH MANUFACTURER-APPROVED SEALANT. CONDUIT TERMINATORS SHALL PROVIDE 1"TO 1-1/2"SEPARATION BETWEEN CONDUITS.
5. ECBS, TYPE 5, EACH WALL SHALL INCLUDE 2 CABLE RACKS, MINIMUM 54"IN LENGTH, AS SHOWN IN THE DETAILS. CABLE RACKS SHALL BE INSTALLED DIRECTLY TO THE BOX WALL OR WITH THE SHORTEST STANDOFF BRACKET POSSIBLE. CABLE SUPPORT ARMS WITH PLASTIC OR CERAMIC INSULATORS AND 7"TO 9"IN LENGTH, SHALL BE INCLUDED WITH EACH RACK. FOR EACH RACK, SUFFICIENT CABLE SUPPORT ARMS SHALL BE INSTALLED TO PROVIDE ONE ARM FOR EACH CABLE INSTALLED IN THE BOX, PLUS ONE SPARE ARM. ALL CABLE RACKS, CABLE SUPPORT ARMS, AND MOUNTING/FASTENING HARDWARE SHALL BE HOT-DIPPED GALVANIZED STEEL.
6. CONDUIT DUCT BANKS SHALL BE TERMINATED IN THE ECB AS SHOWN IN THE DETAILS. PRIOR TO GROUTING, THE DUCT BANK SHALL BE BACKFILLED AND COMPACTED FOR THE ENTIRE LENGTH OF TRENCH TO WITHIN TEN FEET OF THE ECBS AT EITHER END OF THE DUCT BANK. CONDUITS SHALL ENTER THE ECB LEVEL, STRAIGHT AND PERPENDICULAR TO THE ECB WALL. CONDUITS SHALL BE SECURED AND ALIGNED WITH CONDUIT ALIGNMENT JIGS MANUFACTURED FROM PLYWOOD, OR CONDUIT SPACERS IN ACCORDANCE WITH SECTION 682, OR OTHER METHOD SUBMITTED TO AND APPROVED BY THE ENGINEER. CONDUIT SHALL BE SECURED PRIOR TO GROUTING AND GROUTING SHALL BE COMPLETE AND SET PRIOR TO FINAL BACKFILLING AROUND THE BOX.
7. ECB COVERS SHALL BE IMPRINTED WITH "GEORGIA DOT COMMUNICATIONS".
8. CONTRACTOR TO BUNDLE CONDUIT, AS SHOWN ON CONDUIT DUCT BANK INSTALLATION DETAILS, WITH CABLE TIES, WIRE OR DUCT TAPE.
9. CONTRACTOR SHALL INSTALL ECBS IN PAVED SHOULDER ONLY WHEN SHOWN IN THE PLANS. IN THE CASE OF NARROW SHOULDER LANES, THE CONTRACTOR SHALL BACKFILL TO THE TOP OF THE BOX THAT EXTENDS BEYOND THE EDGE OF PAVEMENT. IN NO CASE SHALL ANY PORTION OF THE ECB BE INSTALLED IN THE TRAVEL LANE.
10. COSTS OF COMPACTED BACKFILL MATERIAL AND COMPACTED COARSE AGGREGATE SHALL BE INCLUDED IN THE BID PRICE.

GEORGIA
DEPARTMENT OF TRANSPORTATION

- NO SCALE -

REVISION DATES		
09/01/2005		
03/01/2007		

STATE OF GEORGIA
DEPARTMENT OF TRANSPORTATION
OFFICE: TRAFFIC OPERATIONS
ATMS DETAILS

ITS-02

ELECTRICAL COMMUNICATION BOX TYPE 5

DRAWING No. 28-

3/1/2007 GPLN

STATE	PROJECT NUMBER	SHEET NO.	TOTAL SHEETS
GA.			

TUBULAR EXTENSION SPECIFICATIONS

GENERAL:

1. EXTENSIONS SHALL BE FURNISHED WITH A 4"X 6-1/2" REINFORCED HAND-HOLE COMPLETE WITH COVER ATTACHING BY MEANS OF STAINLESS STEEL HARDWARE OPPOSITE THE 2" CONDUIT ENTRANCE.
2. PROVISIONS FOR WIRE ACCESS AS WELL AS FOR GROUNDING MUST BE PROVIDED.
3. EXTENSIONS SHALL BE FURNISHED WITH A 1/2"-13NC GROUND NUT WELDED TO THE OUTSIDE EDGE OF THE BASE.

DESIGN:

1. TUBULAR EXTENSIONS SHALL MEET OR EXCEED THE DESIGN CRITERIA FOR POLES SPECIFIED WITHIN THIS CONTRACT.
2. THE DESIGN SHALL MEET OR EXCEED THE REQUIREMENTS OF THE ELECTRONIC INDUSTRIES ASSOCIATION RS-222-C, CLASS "C".
3. ALL EXTENSIONS SHALL BE DESIGNED FOR SUPPORT OF MICROWAVE EQUIPMENT AND CAMERAS NOT WEIGHING MORE THAN 25 POUNDS EACH.
4. TUBULAR EXTENSIONS SHALL HAVE A MAXIMUM DISTANCE OF 3' FROM THE VERTICAL SIGN SUPPORT.

MATERIALS:

1. ALL ROUND TAPERED TUBES SHALL CONFORM TO REQUIREMENTS OF ASTM-595 GRADE A.
2. STEEL BASE PLATES SHALL BE MANUFACTURED FROM STEEL CONFORMING TO ASTM-A36.
3. ANCHOR BOLT MATERIAL SHALL CONFORM TO REQUIREMENTS OF ASTM-A675 GRADE 90. THE ANCHOR BOLTS SHALL BE GALVANIZED ON THE THREADED END (GALVANIZING IS IN ACCORDANCE WITH ASTM-A153). BOLTS SHALL BE FURNISHED WITH TWO GALVANIZED HEX NUTS AND A TAPPED PLATE OR AN L BEND.

FINISH:

TUBULAR EXTENSIONS SHALL BE HOT DIPPED GALVANIZED IN ACCORDANCE WITH ASTM-A123.

NOTE: ALL DESIGNS AND SHOP DRAWINGS SHALL BE SUBMITTED TO THE STATE OFFICE OF BRIDGE DESIGN FOR APPROVAL PRIOR TO INSTALLATION.

NOTE: TUBULAR EXTENSIONS ARE PAID FOR AS PART OF CAMERA ASSEMBLY.

GENERAL NOTES

GROUNDING:

1. THE CONTRACTOR SHALL INSTALL A NEW GROUNDING SYSTEM FOR THE TUBULAR EXTENSION. CONNECTING TO EXISTING OVERHEAD STRUCTURE OR PROPOSED CABINET GROUNDING SYSTEMS SHALL NOT BE PERMITTED.
2. A 1/2" DIAMETER X 3' SOLID COPPER OR COPPER WITH NICKEL PLATING LIGHTNING ROD SHALL BE CLAMPED TO THE TUBULAR EXTENSION IN ACCORDANCE WITH NATIONAL ELECTRICAL CODE (NEC) REQUIREMENTS.

VIDEO SYSTEM:

1. THE CONTRACTOR SHALL FURNISH AND INSTALL A 2"RIGID CONDUIT RISER FROM CABINET BOTTOM UP EXISTING SIGN STRUCTURE TO NEAR TOP OF OVERHEAD STRUCTURE. FLEXIBLE CONDUIT SHALL ONLY BE USED AS SHOWN. VIDEO CABLES ARE TO RUN INSIDE TUBULAR EXTENSION POLE TO VIDEO DEVICES. INSTALL WEATHER HEADS WITH A THREADED NIPPLE INSTALLED IN A THREADED COLLAR ON THE TUBULAR EXTENSION POLE JUST ABOVE THE CAMERA. THE THREADED COLLAR SHALL BE DESIGNED AND FABRICATED AT THE POINT OF POLE MANUFACTURE. FIELD DRILLING IS NOT PERMITTED. COST FOR VERTICAL CONDUIT (1"AND 2"), WEATHERHEADS, LB-LR CONDUIT STRAPS, AND SWEEPS SHALL BE INCLUDED IN THE BID PRICE FOR VIDEO CAMERA SENSOR ASSEMBLY OR CCTV SYSTEM.
2. ALL CABLE ENTRANCES BETWEEN THE CCTV/VDS CONTROLLER CABINET AND THE TUBULAR EXTENSION POLE SHALL BE BY GALVANIZED RIGID STEEL CONDUIT, UV-STABILIZED METALLIC LIQUID-TIGHT FLEXIBLE CONDUIT, OR LB OR SIMILAR CONDUIT BODY ALWAYS INSTALLED INTO THREADED COLLARS. RIGID COLLARS SHALL BE DESIGN AND FABRICATED AT THE POINT OF MANUFACTURE BY THE MANUFACTURER. STREET ELBOWS ARE NOT PERMITTED. FIELD DRILLING OF TUBULAR EXTENSION POLE IS NOT PERMITTED UNLESS SPECIFIED IN THE APPROVED SHOP DRAWINGS.
3. RISER CONDUIT BENDS, INCLUDING IN THE BASE OF THE CCTV/VDS EQUIPMENT CABINET, SHALL BE MADE ONLY BY LB OR SIMILAR CONDUIT BODIES AND THREADED NIPPLES.
4. SWEEPS SHALL ONLY BE USED AS SHOWN UNDERGROUND AT THE BASE OF THE OVERHEAD STRUCTURE.
5. ALL CONDUIT SHALL BE SECURED TO THE OVERHEAD STRUCTURE, FOUNDATION, AND TUBULAR EXTENSION AS PER NEC REQUIREMENTS. CONDUIT SHALL NOT EXTEND DIRECTLY FROM THE CABINET INTO THE GROUND.

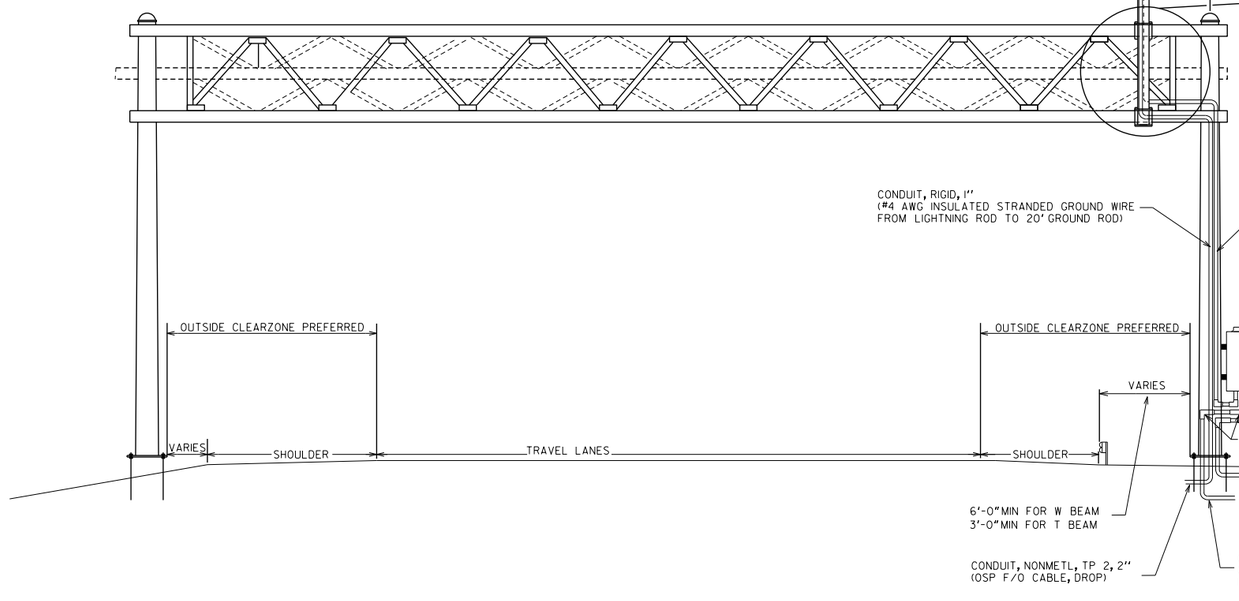

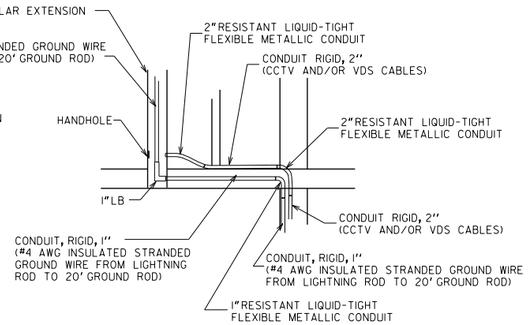

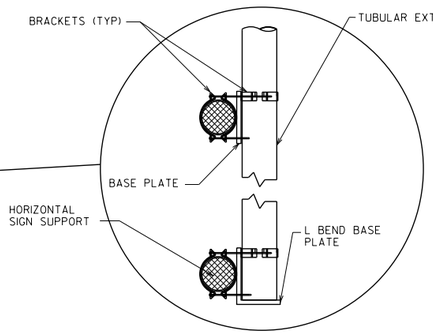

BRACKET ATTACHMENT

(SIDE VIEW)

BY	REVISION	DATE
HAC	ADD TUBE EXT. MAX DIST 3'	4-18-16
	ADD OUTSIDE CLR. ZONE REF	
	REV GR DIM TO SUP. FOOT.	
	ADD GR DIM FOR W/T BEAM	7-01-06
	REVISED	9-01-05
	REVISED	

DESIGNED ____
DRAWN ____
TRACED ____
CHECKED ____

DEPARTMENT OF TRANSPORTATION
STATE OF GEORGIA

CONSTRUCTION DETAILS

DETAILS OF TUBULAR EXTENSION DETAIL STEEL OR ALUMINUM

NO SCALE

REV 4-18-16

NUMBER
ITS-03

STATE	PROJECT NUMBER	SHEET NO.	TOTAL SHEETS
GA.			

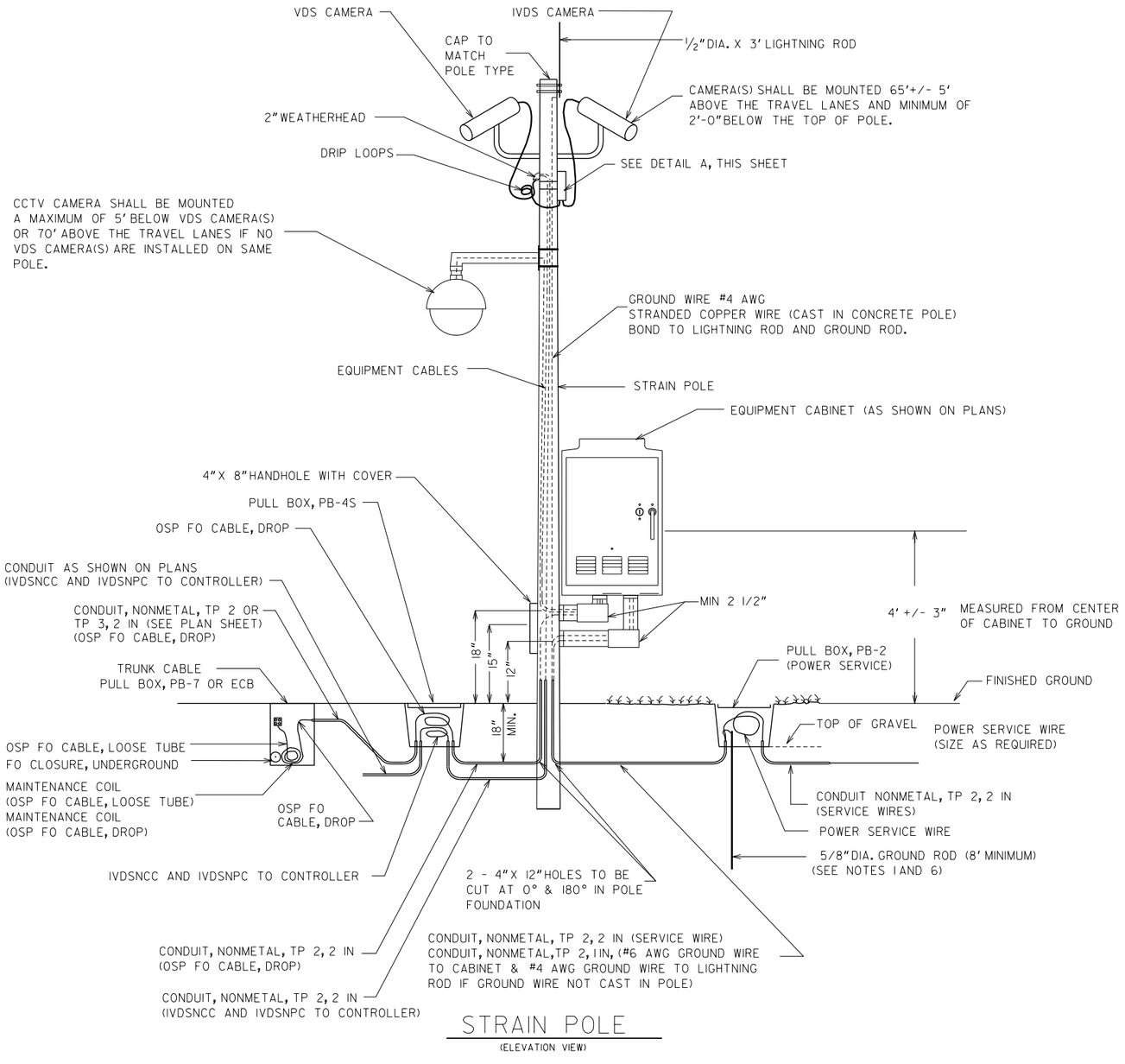

STRAIN POLE
(ELEVATION VIEW)

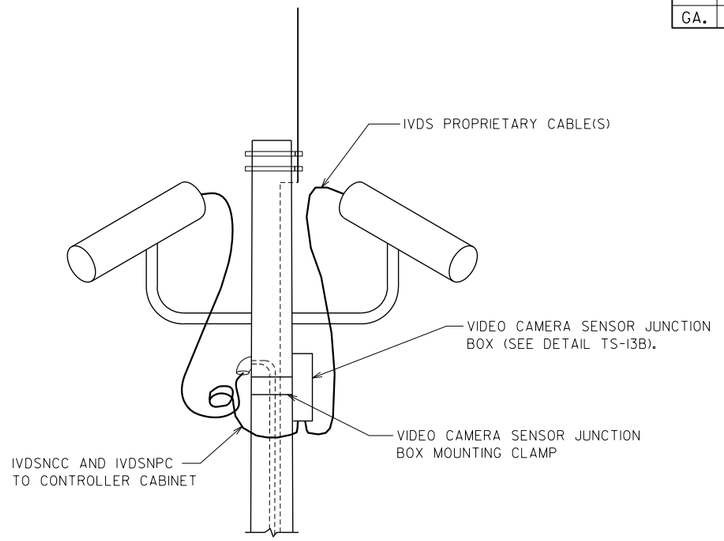

DETAIL A: IVDS JUNCTION BOX
(ELEVATION VIEW)

GENERAL NOTES

1. POLE GROUNDING AND LIGHTNING PROTECTION SHALL BE IN ACCORDANCE WITH SECTIONS 639, 647 AND 924 OF THE SPECIFICATIONS.

2. THE CABINET SHALL BE LOCATED ON THE SIDE OF POLE AS SHOWN ON THE PLAN SHEETS. IF CABINET LOCATION ON PLANS DIFFERS FROM LOCATION SHOWN ON THIS DETAIL, THE CONDUIT ENTRY HOLES (FOR CONDUITS FROM POLE TO CABINET) SHALL BE ROTATED SUCH THAT THESE HOLES ARE LOCATED DIRECTLY BENEATH THE CABINET. ADDITIONALLY THE HANDHOLE SHALL BE ROTATED SUCH THAT THE HANDHOLE IS LOCATED 180° FROM CONDUIT ENTRY HOLES.

3. ALL CABLE ENTRANCES IN OR OUT OF POLE SHALL BE BY A WEATHERHEAD OR RIGID METALLIC CONDUIT BODY WITH A THREADED NIPPLE INSTALLED IN A THREADED COLLAR. THE THREADED COLLAR SHALL BE DESIGNED AND INSTALLED AT THE POINT OF POLE MANUFACTURE. FIELD DRILLING SHALL NOT BE PERMITTED.

4. CONDUITS SHALL BE INSTALLED IN THE FOUNDATIONS OF ALL NEW SUPPORT POLES, INCLUDING LOCATIONS SHOWN IN THE PLANS FOR AERIAL COMMUNICATIONS AND/OR ELECTRICAL POWER SERVICE. IN ADDITION TO THE CONDUITS SHOWN ON THE PLANS, THE CONTRACTOR SHALL INSTALL 2 - 2"AND 2 - 1" (CONDUIT, NONMETAL, TP 2). CONDUITS SHALL BE STUBBED AND CAPPED A MINIMUM OF 3' BEYOND THE NEW FOUNDATION. ONE 2"AND ONE 1"SHALL REMAIN EMPTY.

5. RISER CONDUIT BENDS, INCLUDING INTO THE BASE OF THE EQUIPMENT CABINET, SHALL BE MADE ONLY BY LL OR LR OR SIMILAR RIGID METALLIC CONDUIT BODIES AND THREADED NIPPLES. STREET ELBOWS AND SWEEPS ARE NOT PERMITTED. PROVIDE MAINTENANCE ACCESSIBILITY TO THE ACCESS COVER.

6. GROUND ROD SHALL BE A MINIMUM OF 6"AND A MAXIMUM OF 10"ABOVE PULL BOX DRAINAGE GRAVEL.

7. STRAIN POLES SHALL BE PLACED A MINIMUM OF 32 FEET FROM EDGE OF TRAVEL LANE (CLEAR ZONE) UNLESS SHOWN OTHERWISE ON THE PLAN SHEET. IF CLEAR ZONE REQUIREMENTS CANNOT BE MET, CONTRACTOR SHALL CONTACT THE ENGINEER FOR CLARIFICATION.

BY	REVISION	DATE
HAC	ADD PULL BOX TYPE LABELS	3-3-16
	ADD GRAVEL-FINISH GROUND	
	ADD DETAIL TS-13B NOTE	12-14-06

DEPARTMENT OF TRANSPORTATION
STATE OF GEORGIA

CONSTRUCTION DETAILS

DETAILS OF
CCTV/VDS/IVDS ASSEMBLY
AND TYPICAL ERECTION DETAIL

NO SCALE 12-14-06

DESIGNED ____
DRAWN ____
TRACED ____
CHECKED ____

NUMBER
ITS-04

			COUNTY	PROJECT NUMBER	SHEET NO.	TOTAL SHEETS

FILL SECTION

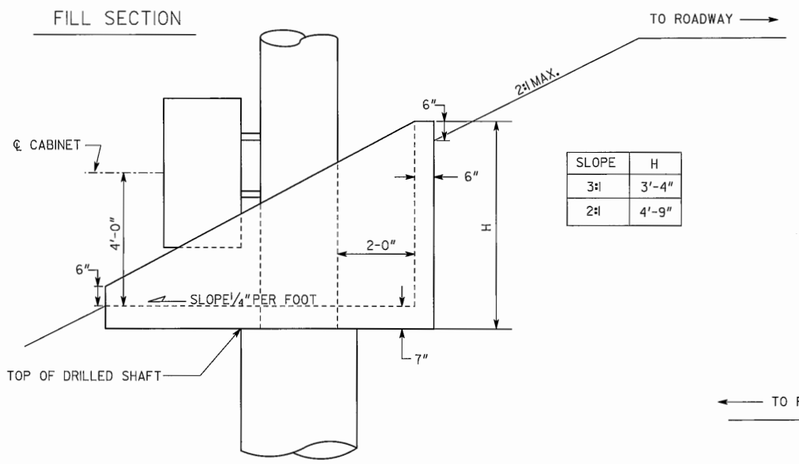

SLOPE	H
3:1	3'-4"
2:1	4'-9"

CUT SECTION

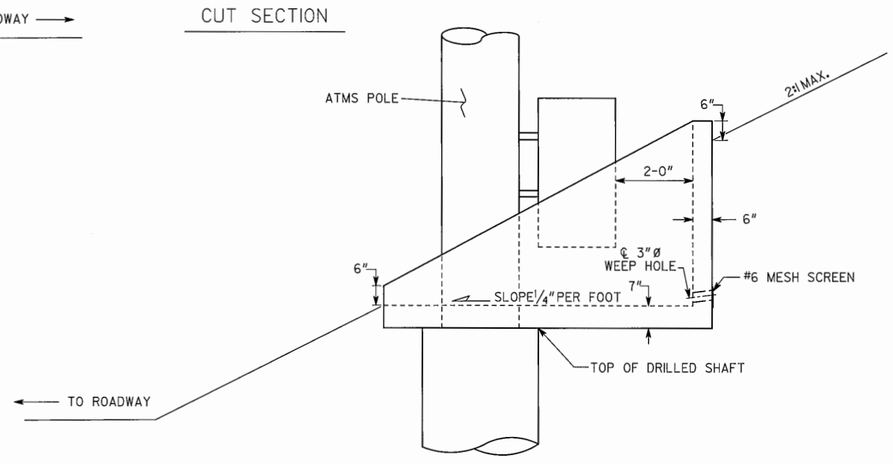

DESIGN DATA

SPECIFICATIONS ---------- AASHTO 2002

CONCRETE ---------- CLASS A, f'_c = 3,000 PSI

REINFORCEMENT STEEL ---------- GRADE 60, f_y = 60,000 PSI

DESIGN SOIL PRESSURE ---------- 3 KSF

COHESION ---------- 0

ANGLE OF INTERNAL FRICTION ---------- 28°

UNIT WEIGHT ---------- 110 PCF

COEFFICIENT OF SLIDING FRICTION ---------- 0.45

* -FIELD CUT TO CLEAR ATMS POLE

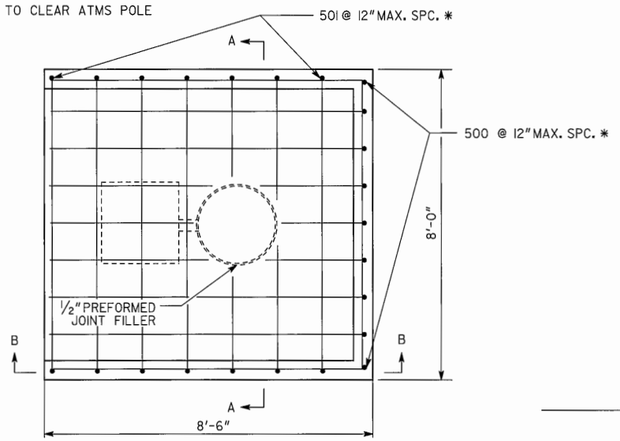

PLAN

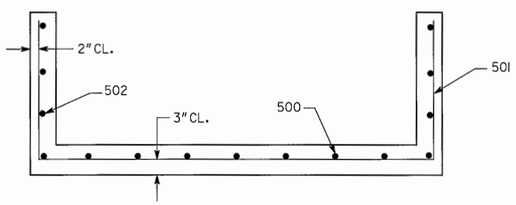

SECTION A-A

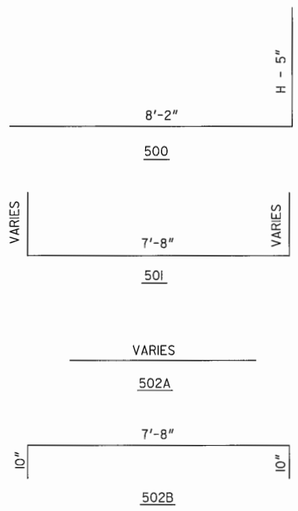

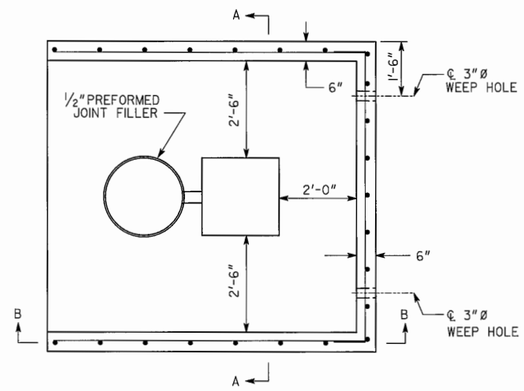

PLAN

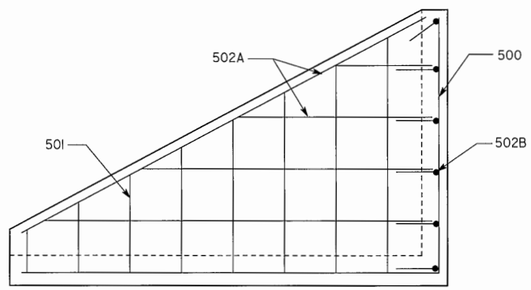

SECTION B-B

GENERAL NOTES

SPECIFICATIONS - GEORGIA STANDARD SPECIFICATIONS, 2001 EDITION, AS MODIFIED BY CONTRACT DOCUMENTS.

REINFORCING STEEL - ALL REINFORCING STEEL SHALL BE PLACED AND TIED IN ACCORDANCE WITH THE GEORGIA DOT SPECIFICATIONS. WELDING OF REINFORCING STEEL WILL NOT BE PERMITTED.

FINISH - EXPOSED SURFACES OF THE WALL SHALL RECEIVE A TYPE III FINISH.

CONCRETE COVER - MAINTAIN 3" COVER ON ALL FOOTING REINFORCING AND 2" COVER ON ALL STEM REINFORCING.

INCIDENTAL ITEMS - COST INCIDENTAL TO THE WORK THAT IS NOT SPECIFICALLY COVERED BY THE GEORGIA STANDARD SPECIFICATIONS, SUPPLEMENTAL SPECIFICATIONS AND/OR SPECIAL PROVISIONS SHALL BE INCLUDED IN THE OVERALL BID SUBMITTED. THIS INCLUDES THE COST OF JOINT FILLERS, AND OTHER INCIDENTAL ITEMS NECESSARY TO COMPLETE THE WORK.

SUMMARY OF QUANTITIES

PAY ITEM NUMBER	QUANTITY	UNIT	PAY ITEM
500-3701	3	CY	CLASS A CONCRETE, RETAINING WALL
511-1000	320	LB	BAR REINFORCING STEEL

NOTE: QUANTITIES SHOWN ASSUME A 2:1 SLOPE

GEORGIA
DEPARTMENT OF TRANSPORTATION

- NO SCALE -

REVISION DATES
06/01/2005

STATE OF GEORGIA
DEPARTMENT OF TRANSPORTATION
OFFICE: BRIDGE DESIGN

ATMS PLANS

PLATFORM DETAILS

ITS-05

DESIGNED	DDF	CHECKED	SWW	REVIEWED	HSL	DRAWING No.
DRAWN	DDF	DESIGN GROUP	SWW	APPROVED	PLV	28-

COUNTY	PROJECT NUMBER	SHEET NO.	TOTAL SHEETS

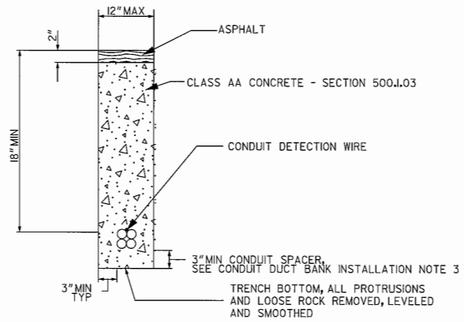

TYPICAL SECTION OF CONDUIT DUCT BANK
TRENCH UNDER ASPHALT PAVED SHOULDER

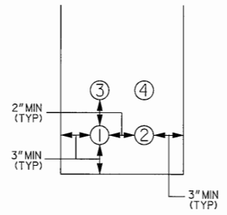

CONDUIT DUCT BANK
ECB AND PB TERMINATION

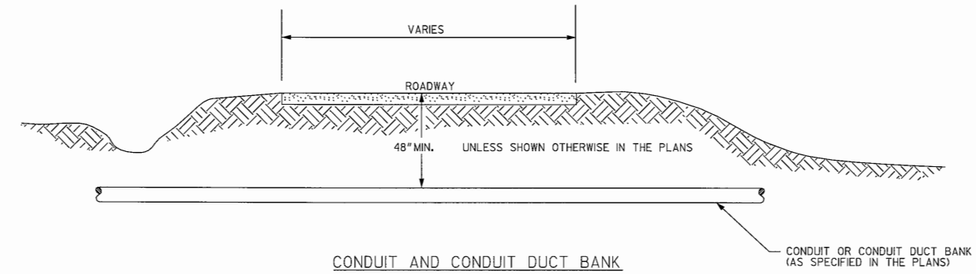

CONDUIT AND CONDUIT DUCT BANK
TYPICAL DIRECTIONAL BORE AT RAMP CROSSING

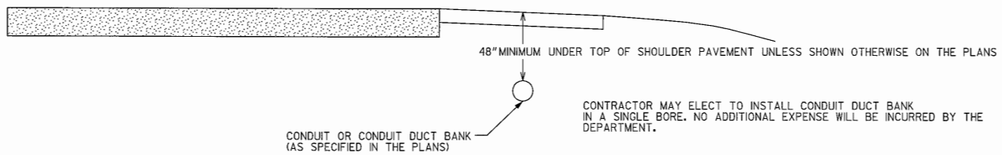

CONDUIT AND CONDUIT DUCT BANK
TYPICAL DIRECTIONAL BORE SECTION

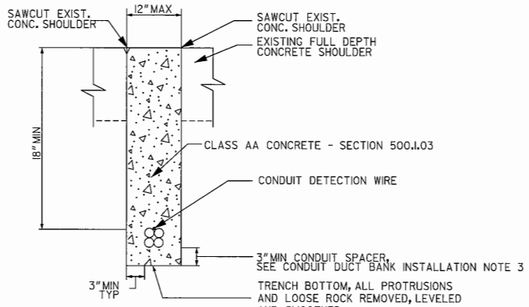

TYPICAL SECTION OF CONDUIT DUCT BANK
TRENCH UNDER CONCRETE SHOULDER

CONDUIT ID	NOMINAL INSIDE DIAMETER (INCHES)	BASE COLOR	STRIPE COLOR
1	2	BLUE	NONE
2	2	ORANGE	NONE
3	2	YELLOW	NONE
4	2	RED	NONE

CONDUIT DUCT BANK COLOR CODE

CONDUIT AND CONDUIT DUCT BANK INSTALLATION

1. UNLESS OTHERWISE SPECIFIED ON THE PLANS, CONDUIT AND CONDUIT DUCT BANK MAY BE INSTALLED BY TRENCHING OR DIRECTIONAL BORING, AT THE CONTRACTOR'S OPTION. THE CONTRACTOR MAY USE BOTH OPTIONS, DEPENDING ON FIELD CONDITIONS, HOWEVER ONLY ONE METHOD SHALL BE USED BETWEEN ACCESS BOXES (PULLBOX OR ECB).

2. THE BID PRICE FOR CONDUIT AND CONDUIT DUCT BANK SHALL INCLUDE THE COST FOR ALL LABOR AND MATERIALS REQUIRED TO INSTALL CONDUIT BY EITHER OPEN TRENCH OR DIRECTIONAL BORE.

3. CONDUIT SPACERS SHALL BE USED AT 6 FT O.C. TO SUPPORT THE CONDUIT BUNDLES ABOVE THE TRENCH BOTTOM. SPACERS MAY BE PLASTIC, STEEL, CONCRETE BLOCKS OR OTHER APPROVED DEVICES.

4. THE MINIMUM BENDING RADIUS FOR CONDUIT AND CONDUIT DUCT BANK SHALL BE 10 TIMES THE DIAMETER OF THE THICKEST FIBER OPTIC CABLE TO BE INSTALLED IN A CONDUIT LINK.

CONSTRUCTION NOTES FOR CONCRETE SHOULDER

1. LIMITS OF TRENCH SHALL BE SAW CUT. AT LOCATIONS OF EXISTING LONGITUDINAL JOINT, THAT JOINT SHALL BE USED AS ONE SIDE OF TRENCH.

2. AT TRANSVERSE JOINTS THE CONTRACTOR SHALL SEAL NEW JOINT TO MATCH EXISTING WITH APPROVED JOINT MATERIALS.

3. THE COST FOR SAW CUTTING, CONCRETE REMOVAL, AND SEALING JOINTS SHALL BE INCLUDED IN THE BID PRICE FOR CONDUIT DUCT BANK TYPE 3.

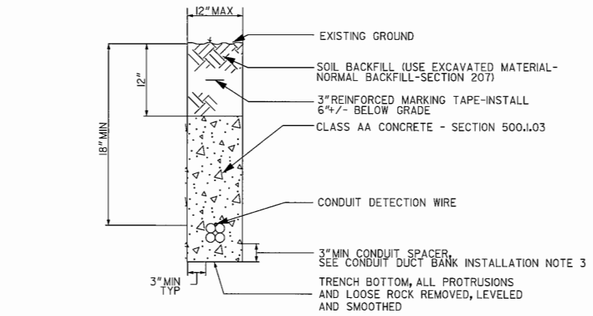

TYPICAL SECTION OF CONDUIT DUCT BANK TRENCH

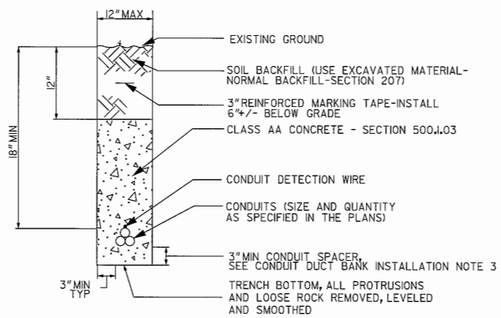

TYPICAL SECTION OF CONDUIT TRENCH

GEORGIA
DEPARTMENT OF TRANSPORTATION

NOT TO SCALE

REVISION DATES		
10/01/2006		

STATE OF GEORGIA
DEPARTMENT OF TRANSPORTATION
OFFICE: TRAFFIC SAFETY & DESIGN
ATMS PLANS
ITS-07
CONDUIT AND CONDUIT DUCT BANK TYPE 3 INSTALLATION DETAILS
DRAWING No. 28-

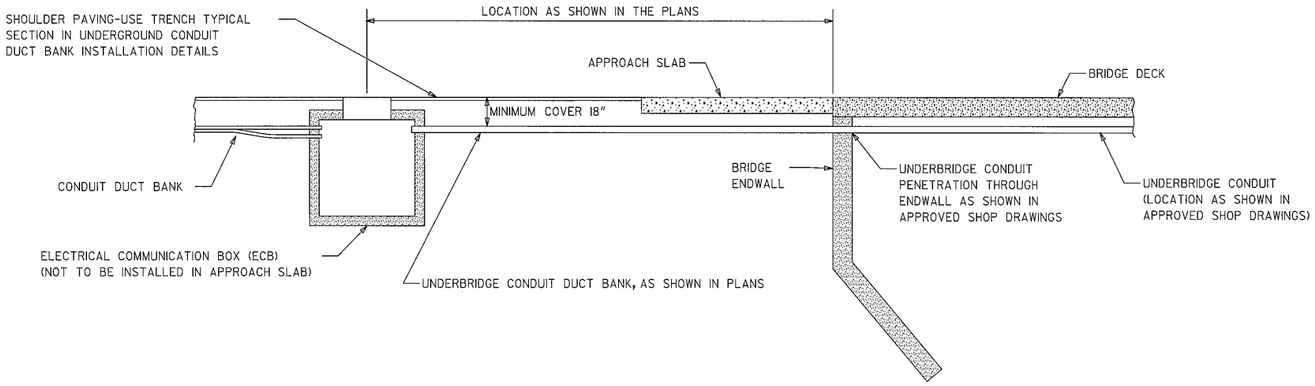

TYPICAL UNDERBRIDGE CONDUIT TERMINATION

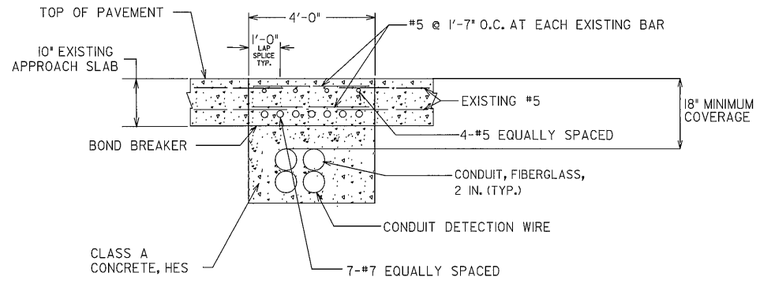

TYPICAL SECTION AT APPROACH SLAB

NOTE: #5 AND #7 BAR REINFORCEMENT SHALL BE IN ACCORDANCE WITH GA. STANDARD 9017P - REINFORCED CONCRETE APPROACH SLAB.

APPROACH SLAB MATERIALS AND CONSTRUCTION SHALL BE IN ACCORDANCE WITH SECTION 433 OF THE GDOT SPECIFICATIONS.

COST OF SAW CUTTING, TRENCHING, BAR REPLACEMENT, CONCRETE, CONDUIT DETECTION WIRE, AND RESTORATION SHALL BE INCLUDED IN THE OVERALL BID PRICE OF CONDUIT OR CONDUIT DUCT BANK.

CONTRACTOR SHALL MAINTAIN EXISTING EXPANSION JOINT BETWEEN APPROACH SLAB AND BRIDGE ABUTMENT. IF DAMAGED, COST OF REPLACEMENT SHALL BE BORNE BY CONTRACTOR. JOINT REPLACEMENT, IF REQUIRED SHALL MATCH EXISTING JOINT MATERIAL, AND SHALL BE APPROVED BY THE ENGINEER.

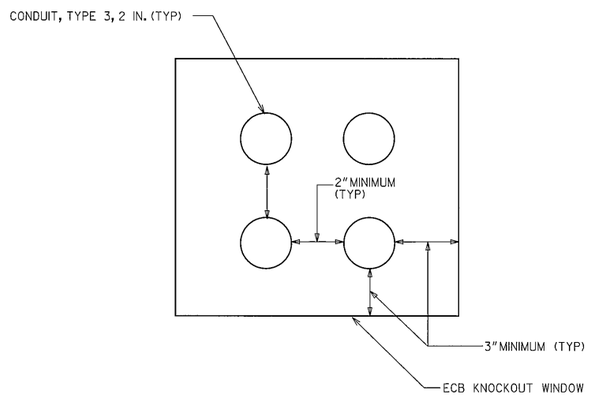

UNDERBRIDGE CONDUIT DUCT BANK-ECB TERMINATION

GRANT WALDROP

GEORGIA
DEPARTMENT OF TRANSPORTATION

- NO SCALE -

REVISION DATES
12/14/2006

STATE OF GEORGIA
DEPARTMENT OF TRANSPORTATION
OFFICE: TRAFFIC SAFETY & DESIGN
ATMS DETAILS

UNDERBRIDGE CONDUIT DUCT BANK INSTALLATION DETAILS

ITS-08
DRAWING No. 28-

			COUNTY	PROJECT NUMBER	SHEET NO.	TOTAL SHEETS

CONDUIT INSTALLATION DETAIL

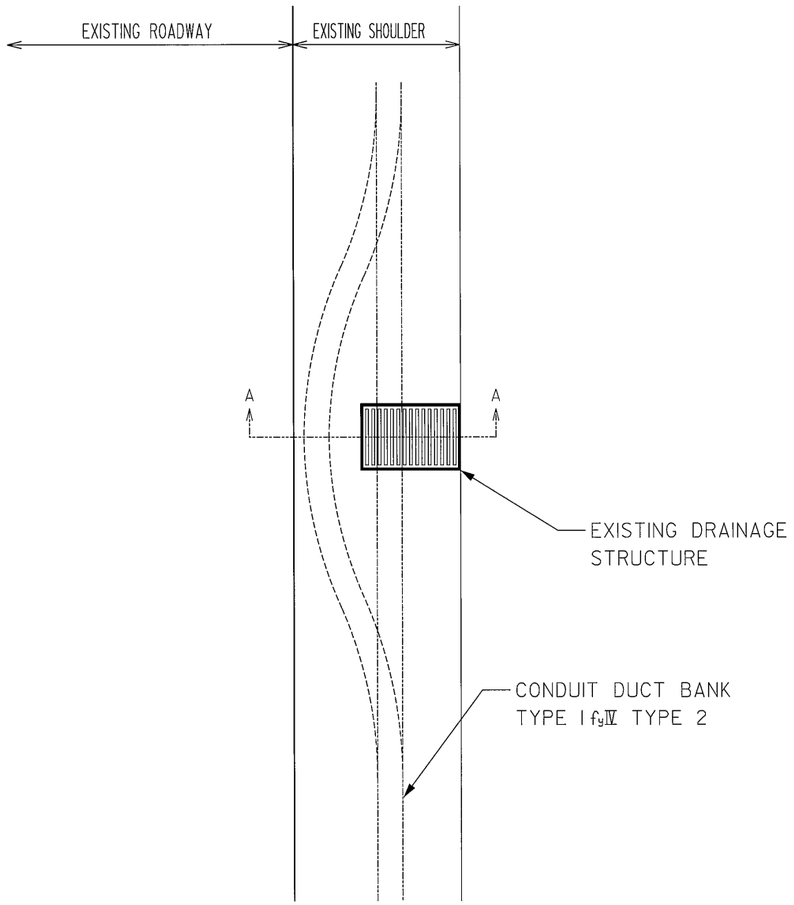

PLAN VIEW

- NOT TO SCALE -

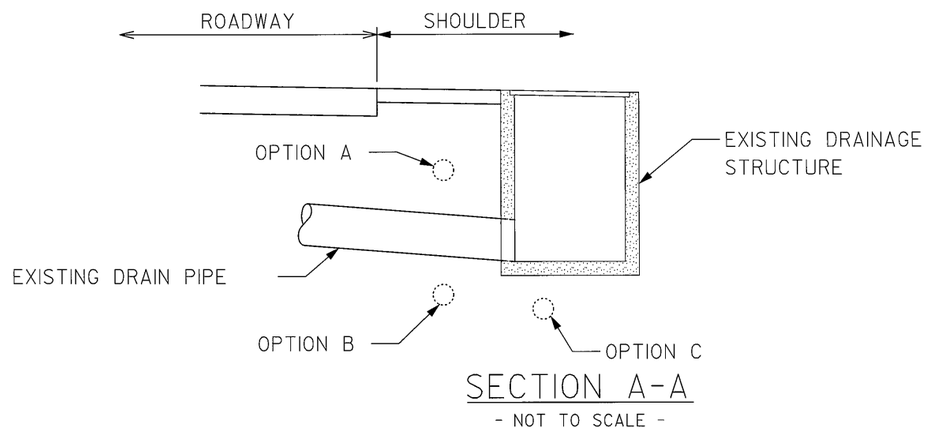

SECTION A-A

- NOT TO SCALE -

CONDUIT DUCT BANK INSTALLATION AT SHOULDER DRAINAGE STRUCTURE LOCATIONS

1. AT DRAINAGE STRUCTURE LOCATIONS WITHIN THE EXISTING SHOULDER, THE CONTRACTOR SHALL HAVE 3 OPTIONS FOR DUCT BANK INSTALLATION.

2. THE TOTAL COST FOR THE OPTION CHOSEN BY THE CONTRACTOR SHALL BE INCLUDED IN THE PRICE BID FOR CONDUIT DUCT BANK TYPE 1 OR TYPE 2.

3. OPTION A: TRENCH OR BORE OVER EXISTING DRAIN PIPE. CONTRACTOR MUST MAINTAIN A MINIMUM OF 18" DEPTH AND MINIMUM OF 6" CLEARANCE FROM EXISTING PIPE.
   OPTION B: BORE UNDER EXISTING DRAIN PIPE, CONTRACTOR MUST MAINTAIN A MINIMUM 6" CLEARANCE UNDER DRAIN PIPE.
   OPTION C: BORE UNDER EXISTING DRAINAGE STRUCTURE, CONTRACTOR MUST MAINTAIN A MINIMUM 12" CLEARANCE FROM THE BOTTOM OF THE STRUCTURE.

GEORGIA
DEPARTMENT OF TRANSPORTATION

- NO SCALE -

REVISION DATES
09/01/2005

STATE OF GEORGIA
DEPARTMENT OF TRANSPORTATION
OFFICE: TRAFFIC SAFETY & DESIGN
ATMS PLANS

ITS-09

CONDUIT INSTALLATION AT DRAINAGE STRUCTURES

DRAWING No. 28-

			COUNTY	PROJECT NUMBER	SHEET NO.	TOTAL SHEETS

STRUCTURE NUMBER PLACEMENT DETAIL

STRUCTURE LABEL DETAIL EXAMPLE #1

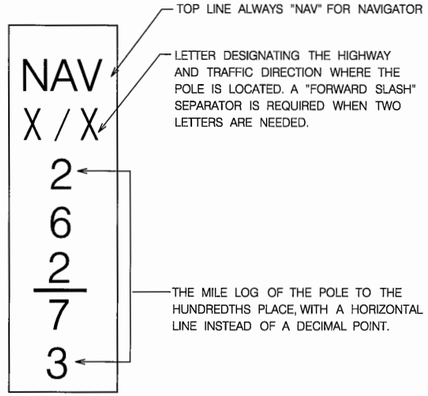

SAMPLE LABEL FORMAT

LABEL PLACEMENT EXAMPLE #2

CAMERA(S) ON POLE LOCATED OFF RIGHT SHOULDER OF FREEWAY

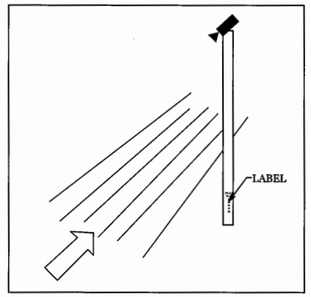

EXAMPLE:
CAMERA POLE LOCATED ON THE RIGHT SHOULDER OF I-75 NORTHBOUND AT MILEPOST 27083 WITH LABEL "NAV C 270-83". LABEL IS PLACED ON THE FRONT FACE OF THE POLE FACING ONCOMING TRAFFIC.

LABEL PLACEMENT EXAMPLE #3

CAMERA(S) ON TUBULAR EXTENSION ATTACHED TO RIGHT SIDE OF A STRUCTURE

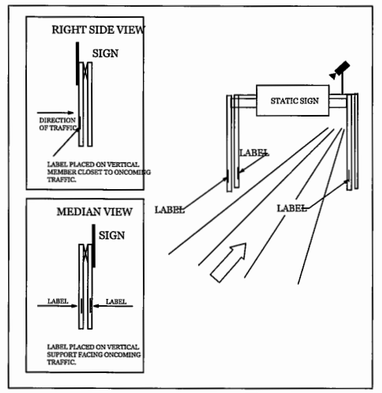

EXAMPLE:
A SIGN BRIDGE ON I-75 NORTHBOUND AT MILEPOST 270.83 WITH DEVICE(S) NEAR THE RIGHT VERTICAL SUPPORT. THE LABLES WILL READ "NAV C 270-83" ON THE RIGHT SIDE FACING TRAFFIC AND ON EITHER SIDE OF THE VERTICAL MEDIAN STRUCTURE. DELETE REAR-FACING LABEL IF MEDIAN IS OVER 32' WIDE AND LABEL WOULD NOT BE VIEWABLE FROM THE OPPOSITE DIRECTION.

LABEL PLACEMENT EXAMPLE #4

CAMERA(S) ON TUBULAR EXTENSION ATTACHED TO LEFT SIDE OF A STRUCTURE

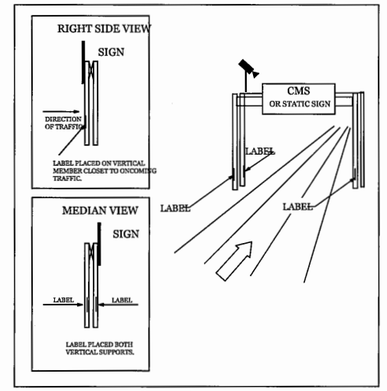

EXAMPLE:
A SIGN BRIDGE ON I-75 NORTHBOUND AT MILEPOST 270.83 WITH DEVICE(S) NEAR THE LEFT VERTICAL SUPPORT. THE LABLES WILL READ "NAV C0 270-83" ON THE RIGHT SIDE FACING TRAFFIC AND ON EITHER SIDE OF THE VERTICAL MEDIAN STRUCTURE. DELETE REAR-FACING LABEL IF MEDIAN IS OVER 32' WIDE AND LABEL WOULD NOT BE VIEWABLE FROM THE OPPOSITE DIRECTION.

LABEL PLACEMENT EXAMPLE #5

CAMERA(S) ON TUBULAR EXTENSION ATTACHED TO BOTH SIDES OF A SIGN STRUCTURE

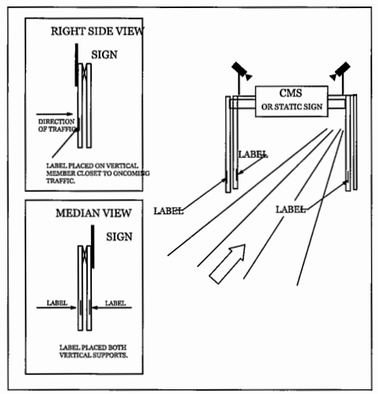

EXAMPLE:
A SIGN BRIDGE ON I-75 NORTHBOUND AT MILEPOST 270.83 WITH DEVICE(S) NEAR THE RIGHT AND LEFT SIDE VERTICAL SUPPORTS. THE LABLES WILL READ: "NAV C0 270_83" ON THE RIGHT SIDE FACING TRAFFIC AND ON EITHER SIDE OF THE VERTICAL MEDIAN STRUCTURE. DELETE REAR-FACING LABEL IF MEDIAN IS OVER 32' WIDE AND LABEL WOULD NOT BE VIEWABLE FROM THE OPPOSITE DIRECTION.

LABEL PLACEMENT EXAMPLE #6

CAMERA(S) ON FULL WIDTH INTERSTATE SPAN

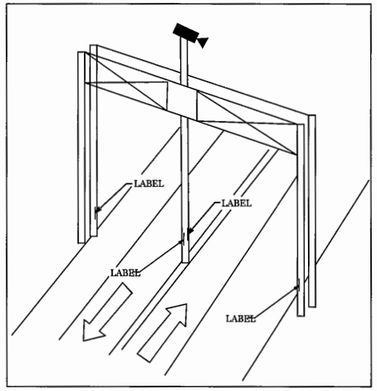

EXAMPLE:
CAMERA MOUNTED ON A STRUCTURE ABOVE THE MEDIAN ON I-75 NORTHBOUND AT MILEPOST 270.83. LABELS ARE MARKED "NAV C0 270_83." FOUR LABELS WOULD BE AFFIXED TO THE STRUCTURE. ONE LABEL IS AFFIXED TO THE VERTICAL SUPPORT STRUCTURE ON THE NORTHBOUND SIDE. ONE LABEL IS AFFIXED TO THE VERTICAL SUPPORT STRUCTURE ON THE SOUTHBOUND SIDE AND TWO LABELS ARE AFFIXED TO THE VERTICAL SUPPORT STRUCTURE IN THE MEDIAN.

LABEL PLACEMENT EXAMPLE #7

CAMERA(S) OR A SIGN ON POLE LOCATED IN MEDIAN OF FREEWAY

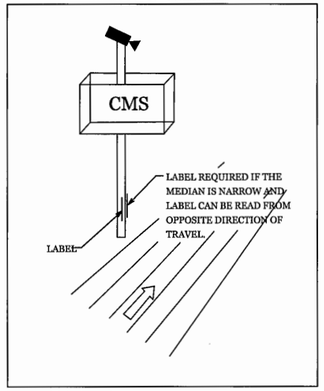

EXAMPLE:
CAMERA POLE OR DMS LOCATED IN THE MEDIAN OF I-75 NORTHBOUND AT MILEPOST 282.98 WITH LABEL "NAV C0 282_96". LABEL IS PLACED ON THE FRONT AND REAR OF THE POLE FACING TRAFFIC APPROACHING FROM BOTH DIRECTIONS. DELETE REAR-FACING LABEL IF MEDIAN IS OVER 32' WIDE AND LABEL WOULD NOT BE VIEWABLE FROM THE OPPOSITE DIRECTION.

GEORGIA
DEPARTMENT OF TRANSPORTATION

- NO SCALE -

DATE	REVISIONS
12/13/2005	CORRECTED LABEL LOCATIONS

STATE OF GEORGIA
DEPARTMENT OF TRANSPORTATION
OFFICE: TRAFFIC SAFETY & DESIGN
ATMS PLANS

ITS-10
STRUCTURE NUMBER PLACEMENT DETAIL
DRAWING No. 28-

			COUNTY	PROJECT NUMBER	SHEET NO.	TOTAL SHEETS

GENERAL NOTES

1. ALL ITEMS NECESSARY TO INSTALL FORWARD MOUNT RADAR OR SIDE MOUNT RADAR ON SIGN STRUCTURE SHALL BE INCLUDED IN THE BID PRICE FOR MICROWAVE RADAR DETECTION ASSEMBLY.
2. ALL DESIGNS AND SHOP DRAWINGS SHALL BE SUBMITTED TO THE STATE OFFICE OF BRIDGE DESIGN FOR APPROVAL PRIOR TO INSTALLATION.
3. THE CONTRACTOR SHALL FURNISH AND INSTALL A 2"RIGID CONDUIT RISER FOR MICROWAVE RADAR CABLES FROM CABINET BOTTOM UP EXISTING SIGN STRUCTURE TO MICROWAVE RADAR UNITS AS SHOWN ON THE PLANS. COST FOR VERTICAL CONDUIT (1"AND 2"), WEATHERHEADS, LB-LR CONDUIT STRAPS, AND SWEEPS SHALL BE INCLUDED IN THE BID PRICE FOR MICROWAVE RADAR DETECTION ASSEMBLY. A RUBBER GROMMET SHALL BE INSTALLED ON THE BOTTOM FACE OF CONDUIT AT EACH MICROWAVE RADAR LOCATION TO PREVENT MOISTURE FROM ENTERING THE MICROWAVE RADAR CABLES CONDUIT. DRIP LOOPS SHALL NOT EXTEND BELOW THE SIGN STRUCTURE.
4. ALL CABLE ENTRANCES BETWEEN THE MICROWAVE RADAR DETECTION CABINET AND THE CONDUIT RISER SHALL BE BY GALVANIZED RIGID STEEL CONDUIT, UV-STABILIZED METALLIC LIQUID-TIGHT FLEXIBLE CONDUIT, OR LB OR SIMILAR CONDUIT BODY ALWAYS INSTALLED INTO THREADED COLLARS. RIGID COLLARS SHALL BE DESIGN AND FABRICATED AT THE POINT OF MANUFACTURE BY THE MANUFACTURER. STREET ELBOWS ARE NOT PERMITTED.
6. SWEEPS SHALL ONLY BE USED AS SHOWN UNDERGROUND AT THE BASE OF THE OVERHEAD STRUCTURE.
7. ALL CONDUIT AND CABLES SHALL BE SECURED TO THE OVERHEAD STRUCTURE AND FOUNDATION AS PER NEC REQUIREMENTS. CONDUIT SHALL NOT EXTEND DIRECTLY FROM THE CABINET INTO THE GROUND.

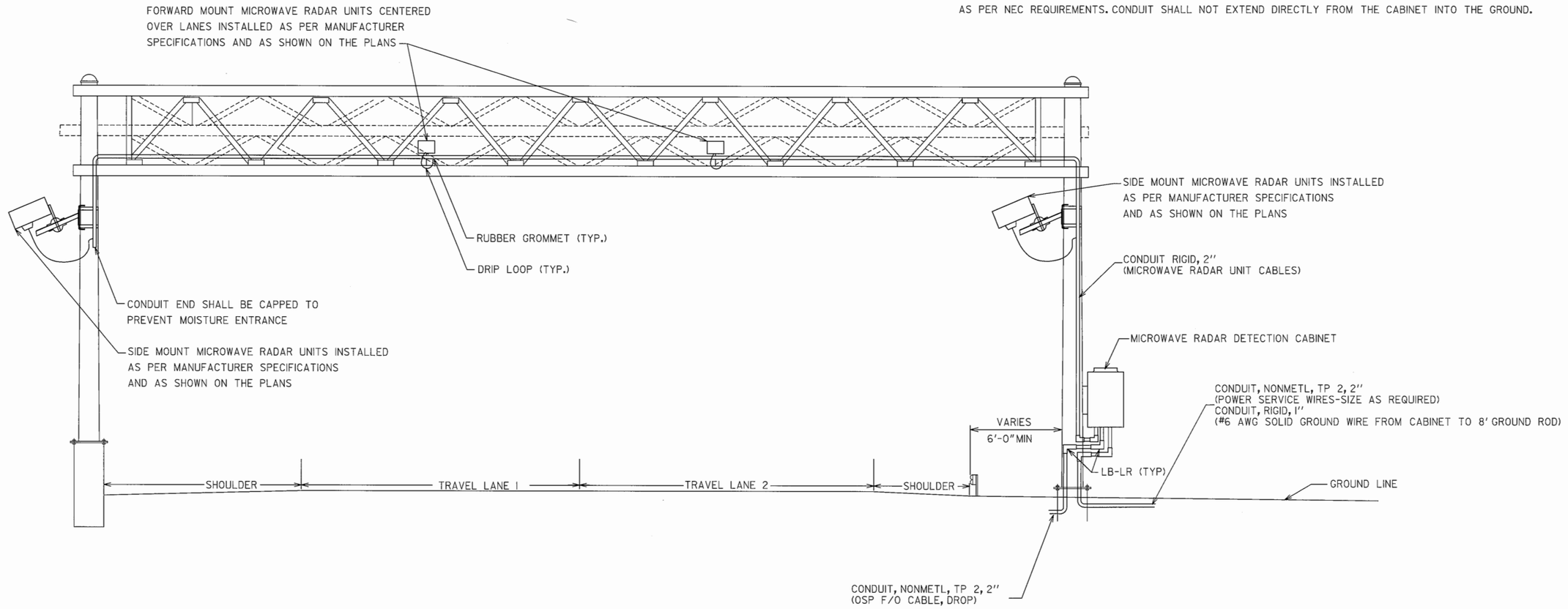

GEORGIA
DEPARTMENT OF TRANSPORTATION

- NO SCALE -

REVISION DATES		
11/22/2006		

STATE OF GEORGIA
DEPARTMENT OF TRANSPORTATION
OFFICE: TRAFFIC SAFETY & DESIGN
ATMS PLANS

RADAR ASSEMBLY FOR OVERHEAD SIGN STRUCTURE

ITS-II
DRAWING No. 28-

			COUNTY	PROJECT NUMBER	SHEET NO.	TOTAL SHEETS

ELECTRICAL SERVICE INSTALLATION FOR CMS, VDS AND CCTV SYSTEMS

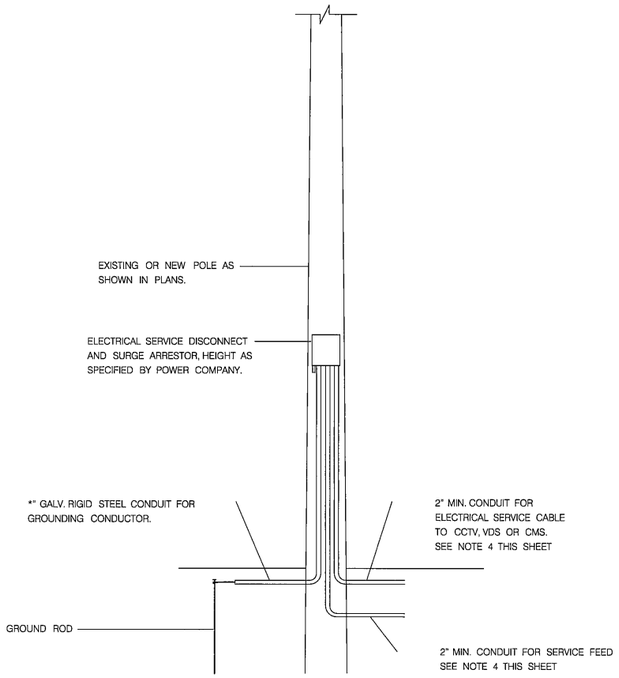

ELECTRICAL POWER SERVICE ASSEMBLY, UNDERGROUND SERVICE POINT

NOT TO SCALE

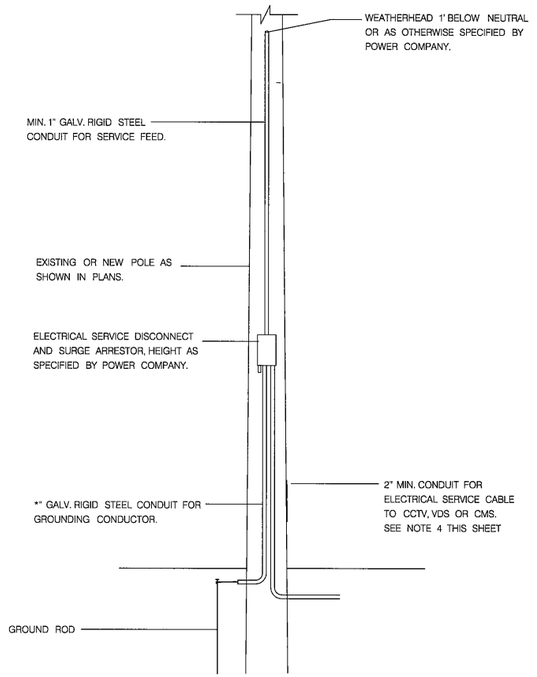

ELECTRICAL POWER SERVICE ASSEMBLY AERIAL SERVICE POINT

NOT TO SCALE

ELECTRICAL SERVICE GENERAL NOTES

1. THE CONTRACTOR SHALL FURNISH AND INSTALL ALL ELECTRICAL SERVICE EQUIPMENT AND MATERIALS FOR CCTV, VDS AND CMS INSTALLATIONS IN ACCORDANCE WITH THE CONTRACT DOCUMENTS, INCLUDING SECTIONS 937 (VIDEO DETECTION SYSTEM) 936 (CCTV SYSTEM), AND 631 (PERMANENT CHANGEABLE MESSAGE SIGN), THE PLANS, AND THE GEORGIA SPECIFICATIONS. ALL MATERIALS AND INSTALLATION SHALL BE IN ACCORDANCE WITH APPLICABLE CODES AND ANY REQUIREMENTS OF THE UTILITY POLE OWNER. THE CONTRACTOR IS RESPONSIBLE FOR ALL COORDINATION WITH UTILITY POLE OWNERS AND THE ELECTRICAL SERVICE PROVIDER.

2. THE CONTRACTOR SHALL FURNISH AND INSTALL NEW GROUND ROD AND CONDUCTOR ASSEMBLIES AT ALL ELECTRICAL SERVICE ASSEMBLIES FOR CCTV AND CMS SYSTEMS ON NEW AND EXISTING POLES. GROUNDING TO EXISTING GROUND RODS AT EXISTING POLES IS NOT PERMITTED EXCEPT WHEN REQUIRED BY THE POLE OWNER. WHEN TYING TO EXISTING GROUND RODS, THE NEW SERVICE DISCONNECT GROUND CONDUCTOR SHALL BE ATTACHED TO THE NEW GROUND ROD FIRST, THEN ROUTED TO THE EXISTING GROUND ROD. GROUND RODS SHALL BE MINIMUM 10 FEET IN LENGTH. RESISTANCE TO GROUND FROM THE GROUND CONDUCTOR CLAMP SHALL BE MEASURED WITH A THREE-POINT EARTH GROUND TEST MEGGER IN THE PRESENCE OF THE ENGINEER. MAXIMUM RESISTANCE TO GROUND AS TESTED SHALL BE 10 OHMS.

3. THE CONTRACTOR SHALL FURNISH AND INSTALL ELECTRICAL SERVICE ASSEMBLIES, INCLUDING ALL MATERIALS SUCH AS CONDUIT, SERVICE CONDUCTORS, DISCONNECT BREAKER, SURGE ARRESTOR, ETC. THE REQUIREMENTS FOR CCTV SYSTEMS ARE IN SECTION 936 OF THE GEORGIA SPECIFICATIONS AND THIS TYPICAL DETAIL. THE REQUIREMENTS FOR VIDEO DETECTION SYSTEMS ARE IN SECTION 937 OF THE GEORGIA SPECIFICATIONS AND THIS TYPICAL DETAIL. THE REQUIREMENTS FOR CMS SYSTEMS ARE IN SECTION 631 OF THE GEORGIA SPECIFICATIONS AND THIS TYPICAL DETAIL, AND SHALL ALSO BE IN FULL ACCORDANCE WITH THE CMS MANUFACTURER'S RECOMMENDATIONS. THE CMS MANUFACTURER'S RECOMMENDATIONS FOR CMS SYSTEM ELECTRICAL SERVICE SHALL BE INCLUDED IN THE SUBMITTAL DATA REQUIRED IN SECTION 631.1.03 AND SHALL INCLUDE SPECIFICATIONS FOR CONDUIT AND CONDUCTORS, GROUNDING, MAIN DISCONNECT BREAKERS AND BRANCH CIRCUIT BREAKERS AS NEEDED, SURGE ARRESTORS, ETC. IN LIEU OF SPECIFIC REQUIREMENTS BY THE CMS MANUFACTURER FOR ANY PARTICULAR ITEM OR MATERIAL, THE ELECTRICAL SERVICE ASSEMBLY REQUIREMENTS SPECIFIED FOR A CCTV SYSTEM SHALL PREVAIL.

4. ALL ABOVEGROUND ELECTRICAL SERVICE CONDUIT SHALL BE GALVANIZED RIGID STEEL. ALL ELECTRICAL SERVICE CONDUIT BODIES, SUCH AS LBS AND COUPLINGS, SHALL BE GALVANIZED RIGID STEEL OR ALUMINUM. RISER CONDUIT BENDS, INCLUDING INTO THE BASE OF THE DISCONNECT HOUSING, SHALL BE MADE ONLY BY LB OR SIMILAR CONDUIT BODIES. STREET ELBOWS AND SWEEPS ARE NOT PERMITTED. ALL UNDERGROUND ELECTRICAL SERVICE CONDUIT SHALL BE SCHEDULE 40 PVC.

GEORGIA
DEPARTMENT OF TRANSPORTATION

- NO SCALE -

REVISION DATES		
09/01/2005		

STATE OF GEORGIA
DEPARTMENT OF TRANSPORTATION
OFFICE: TRAFFIC SAFETY & DESIGN
ATMS PLANS

ELECTRICAL SERVICE DETAIL

ITS-12

DRAWING No. 28-

STATE	PROJECT NUMBER	SHEET NO.	TOTAL SHEETS
GA			

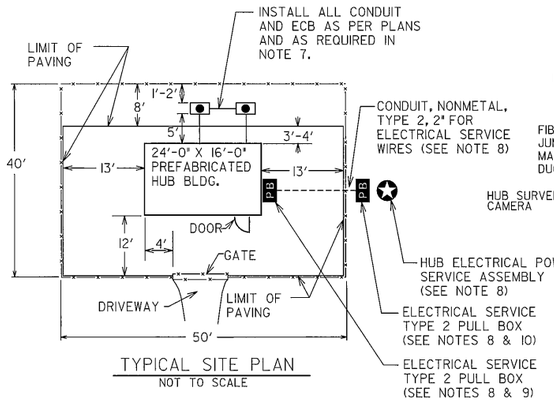

TYPICAL SITE PLAN

NOT TO SCALE

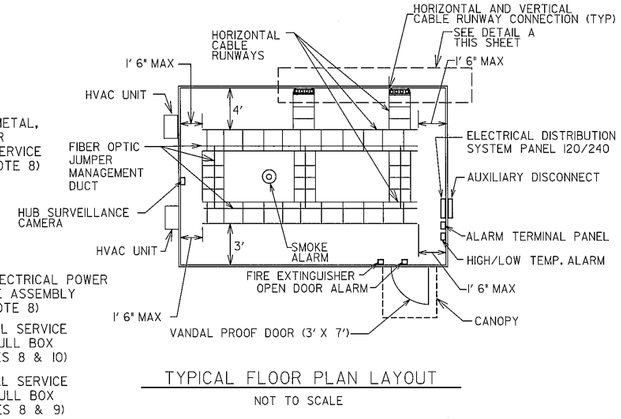

TYPICAL FLOOR PLAN LAYOUT

NOT TO SCALE

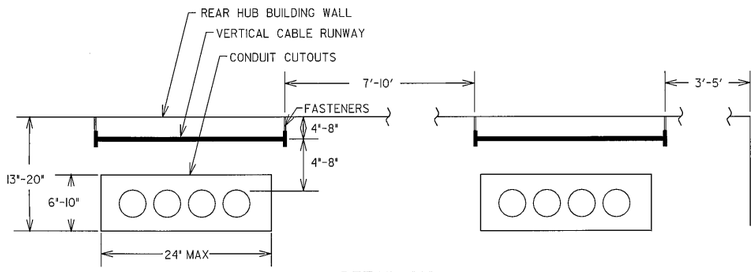

DETAIL "A"

NOT TO SCALE

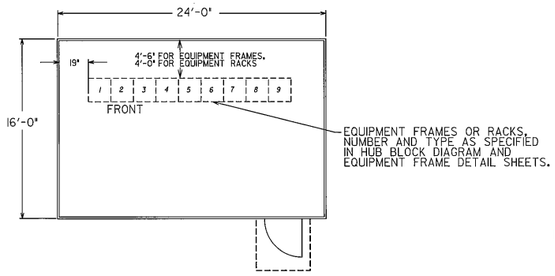

TYPICAL EQUIPMENT FRAME/RACK LAYOUT

NOT TO SCALE

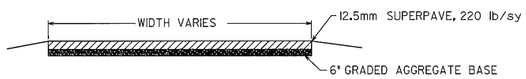

TYPICAL SECTION

NOT TO SCALE

PAVED AREA FOR PREFABRICATED HUB BUILDING

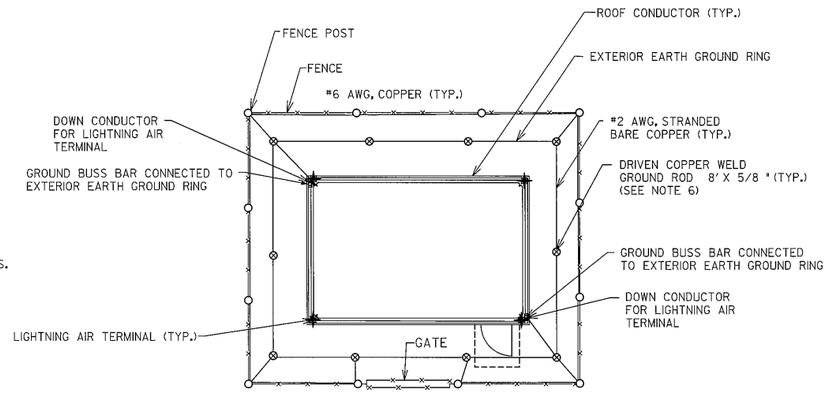

TYPICAL OUTSIDE GROUNDING SYSTEM (PLAN VIEW)

NOT TO SCALE

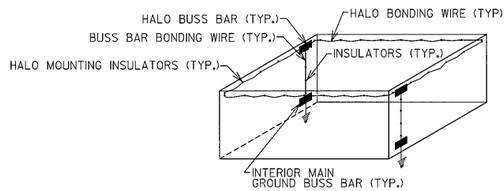

TYPICAL INTERIOR GROUNDING SYSTEM (GRAPHIC VIEW)

NOT TO SCALE

HUB BUILDING GENERAL NOTES

1. CONTRACTOR SHALL PROVIDE A 14FT WIDE ASPHALT DRIVE FROM THE INTERSTATE/RAMP (OR AS SHOWN ON THE PLANS) TO THE HUB BUILDING LOCATION.
2. SITE WORK AND PAVEMENT SHALL BE PROVIDED AS PER GEORGIA SPECIFICATIONS, CURRENT EDITION.
3. CONTRACTOR SHALL BE RESPONSIBLE FOR SURVEY OF BUILDING SITE, FOUNDATION AND ALL SITE WORK. CONTRACTOR SHALL BE RESPONSIBLE FOR ANCHORING THE HUB BUILDING TO THE FOUNDATION SLAB OR PERIMETER BEAM.
4. CONTRACTOR SHALL RESTORE THE AREA AFFECTED BY THE HUB INSTALLATION, INCLUDING REPLACEMENT OF, IN LIKE KIND AND SIZE, ANY GRASS AND LANDSCAPING, AND AS DIRECTED BY THE ENGINEER. REPLACE GRASSING WITH SEED OR SOD (IN ACCORDANCE WITH GEORGIA SPECIFICATIONS SECTION 700).
5. PAVEMENT FOR ASPHALT PAVING AREA SHALL CONSIST OF 12.5 mm SUPERPAVE, 220 lb/sy AND 6" GRADED AGGREGATE BASE. PROVIDE 1/4" PER FT PAVEMENT SLOPE FOR DRAINAGE AWAY FROM THE HUB BUILDING.
6. INSTALL GROUND RODS AT 12 FT INTERVALS FOR EXTERIOR EARTH GROUND RING.
7. INSTALL HUB BUILDING ECB's AS REQUIRED IN THE PLANS SUCH THAT THE ECB COVERS ARE 2" TO 3" ABOVE GROUND LEVEL. CONDUIT SHALL ENTER BUILDING IN A PARALLEL, SIDE-BY-SIDE CONFIGURATION.
8. THE CONTRACTOR SHALL LOCATE THE ELECTRICAL POWER SERVICE ASSEMBLY THROUGH COORDINATION WITH THE LOCAL ELECTRICAL UTILITY COMPANIES. IF THE POWER SERVICE ASSEMBLY IS INSTALLED WITHIN 25 FT. OF THE HUB BUILDING FENCE, THE CONTRACTOR IS NOT REQUIRED TO INSTALL AN AUXILIARY DISCONNECT. PAYMENT FOR COPPER WIRE, PULL BOXES, TRANSFORMERS AND DIRECTIONAL BORES ASSOCIATED WITH THE INSTALLATION OF HORIZONTAL RUNS OF CONDUIT FOR POWER SHALL BE INCLUDED IN THE OVERALL BID PRICE FOR NONMETAL, TYPE 2, 2 IN. CONDUIT.
9. INSTALL THE ELECTRICAL SERVICE TYPE 2 PULL BOX LESS THAN 10 FT. FROM THE HUB BUILDING WALL AND IN LINE WITH THE AUXILIARY DISCONNECT AND ELECTRICAL DISTRIBUTION SYSTEM PANEL.
10. INSTALL THE ELECTRICAL SERVICE TYPE 2 PULL BOX AT THE BASE OF THE ELECTRICAL POWER SERVICE ASSEMBLY POLE.

GEORGIA
DEPARTMENT OF TRANSPORTATION

- NO SCALE -

REVISION DATES		
03/01/2007		

STATE OF GEORGIA
DEPARTMENT OF TRANSPORTATION

OFFICE: TRAFFIC OPERATIONS

ATMS DETAILS

HUB DETAILS - HUB

ITS-13

DRAWING No. 28 -

3/1/2007 GPLN

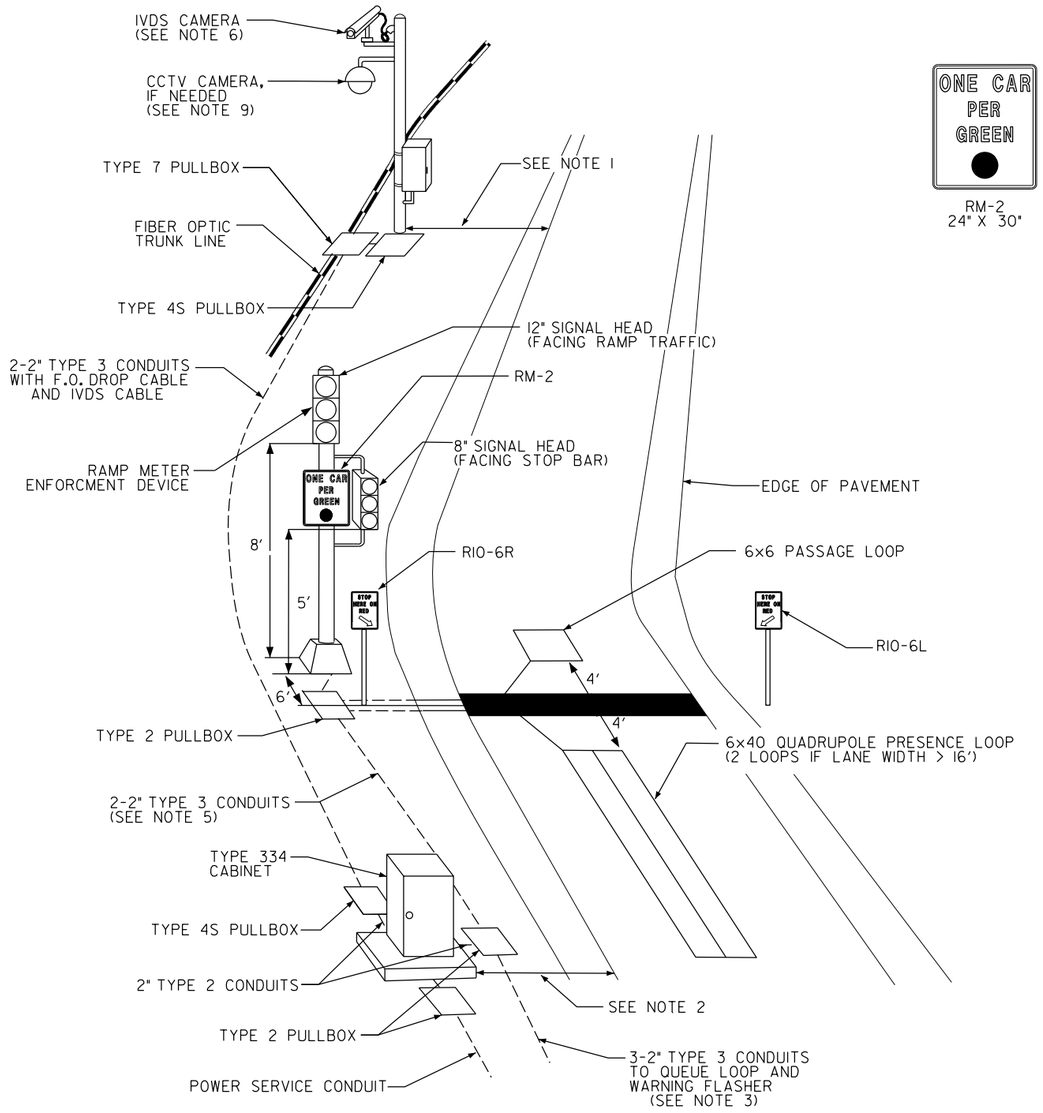

RM-2
24" X 30"



R10-6L
24" X 36"



R10-6R
24" X 36"

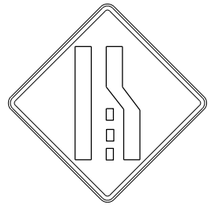

W4-2R
36" X 36"

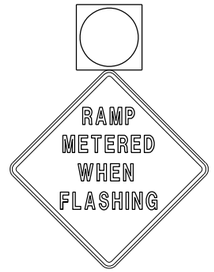

ADVANCE WARNING FLASHER:
(1) W3-8 SIGN (36" X 36")
(1) YELLOW 12" FLASHER

NOTES:

1. IN ORDER TO MEET CLEAR ZONE REQUIREMENTS, FIXED OBJECTS SHALL BE PLACED WITH APPROPRIATE OFFSET AS DEFINED IN THE GDOT DESIGN POLICY MANUAL OR AASHTO'S "ROADSIDE DESIGN GUIDE", OR BE PROTECTED BY GUARDRAIL. FOR GUARDRAIL APPLICATIONS, PROVIDE A MINIMUM SPACING OF 6 FEET BETWEEN THE FACE OF THE GUARDRAIL AND THE FACE OF ALL OBJECTS BEHIND THE GUARDRAIL.
2. CABINETS SHALL BE PLACED 18 FEET FROM EDGE OF RAMP TRAVEL LANE OR AT SHOULDER BREAK POINT, WHICHEVER DISTANCE IS LESS, OR BEHIND GUARDRAIL.
3. FIBER OPTIC/VIDEO CABLING SHALL BE RUN THROUGH TYPE 4S PULL BOXES. POWER CABLING SHALL BE RUN THROUGH TYPE 2 PULL BOXES. TYPE 2 PULL BOXES SHALL BE SPACED A MAXIMUM OF 200 FEET APART ALONG CONDUIT RUNS FOR QUEUE LOOP LEAD-INS. TYPE 4S PULL BOXES SHALL BE SPACED A MAXIMUM OF 750 FEET APART ALONG CONDUIT RUNS.
4. SEPARATE CONDUITS SHALL BE PROVIDED FOR FIBER OPTIC CABLE, IVDS CABLE, SIGNAL CABLE, AND LOOP LEAD-IN CABLE. THE CONTRACTOR SHALL ENSURE THAT THESE CABLES ARE ROUTED THROUGH INDIVIDUAL CONDUITS. LOOP LEAD-IN CABLES FOR THE INTERMEDIATE QUEUE (IQ) DETECTORS AND EXCESSIVE QUEUE (EQ) DETECTORS SHALL ALSO BE ROUTED THROUGH SEPERATE CONDUITS.
5. A SPARE CONDUIT SHALL BE PROVIDED AT ANY BORED CONDUIT RUN LOCATIONS, AND/OR CONDUIT RUNS BETWEEN THE RAMP METER SIGNAL AND THE CABINET.
6. IN-PAVEMENT LOOPS OR MAGNETOMETERS (NOT SHOWN) SHALL BE USED FOR DEMAND, PASSAGE, AND QUEUE DETECTION. IVDS CAMERA DETECTION SHALL BE USED FOR MAINLINE TRAFFIC FLOW DETECTION.
7. IF NEEDED, CCTV CAMERAS SHALL BE PLACED TO MONITOR THE RAMP METER STOP BAR, DISCHARGE AREA, AND THE OPERATION OF RAMP METER SIGNAL HEADS. REFER TO GDOT ITS DETAIL SHEETS FOR INSTALLATION INFORMATION. IF EXISTING CAMERA(S) IN THE AREA CAN VIEW THESE ITEMS/AREAS, NO ADDITIONAL DEVICE SHALL BE REQUIRED.
8. RAMP METERS INSTALLED OUTSIDE OF THE EXISTING GDOT FIBER COMMUNICATIONS NETWORK SHALL HAVE A 4G MODEM INSTALLED WITHIN THE CABINET.
9. MERGE SIGNAGE SHALL BE INSTALLED AS FOLLOWS:
   - FOR RAMPS WITH A STORAGE LENGTH OF LESS THAN 1,000 FEET, INSTALL (1) W4-2R SIGN 325 FEET UPSTREAM OF THE STOP BAR
   - FOR RAMPS WITH A STORAGE LENGTH GREATER OR EQUAL EQUAL TO 1,000 FEET, INSTALL (1) W4-2R SIGN 325 FEET UPSTREAM OF THE STOP BAR AND (1) W4-2R SIGN 150 FEET DOWNSTREAM OF THE ADVANCE WARNING FLASHERS.

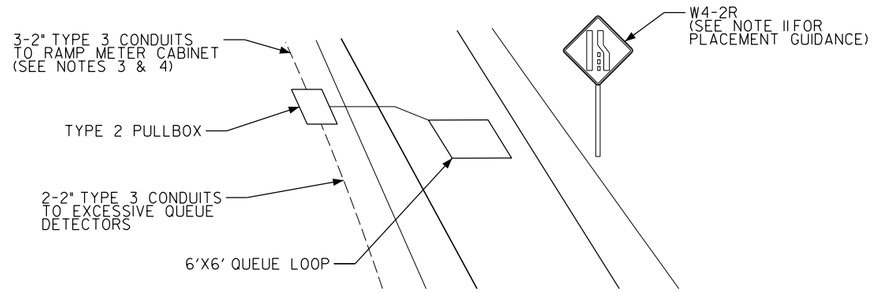

INTERMEDIATE QUEUE (IQ) DETECTOR LOOP PLACEMENT

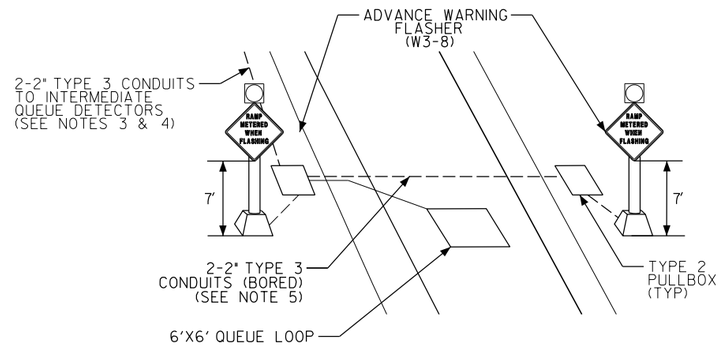

EXCESSIVE QUEUE (EQ) DETECTOR LOOP AND ADVANCE WARNING FLASHER PLACEMENT

DATE	REVISION	BY

DEPARTMENT OF TRANSPORTATION
STATE OF GEORGIA

CONSTRUCTION DETAIL
ITS - RAMP METER INSTALLATION
SINGLE LANE METER DETAILS

NOVEMBER 2020
NO SCALE

NUMBER
ITS-51A

GDOT Georgia Department of Transportation | P. I. No.

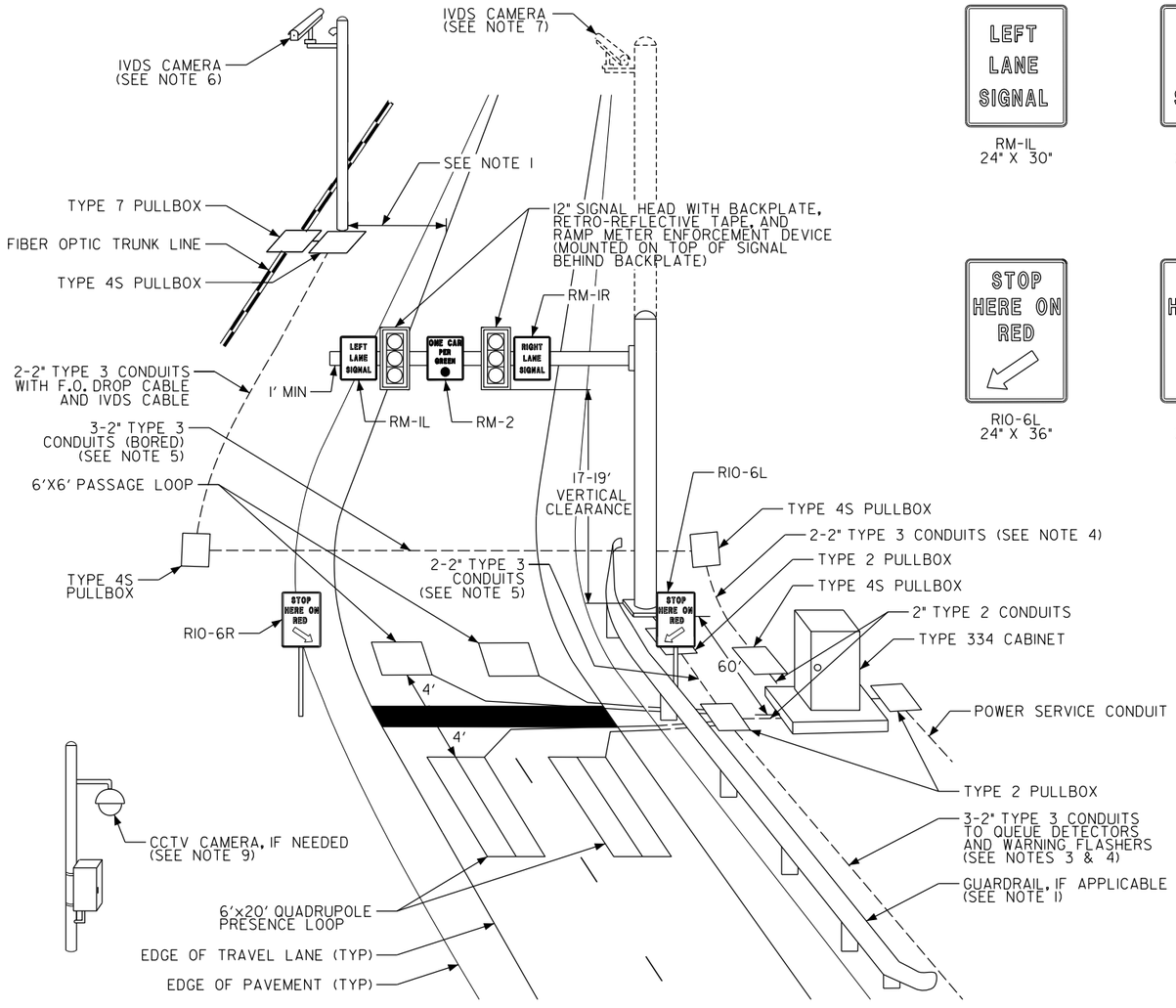

RM-IL
24" X 30"



RM-IR
24" X 30"



RM-2
24" X 30"

RIO-6L
24" X 36"



RIO-6R
24" X 36"

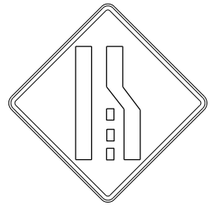

W4-2R
36" X 36"

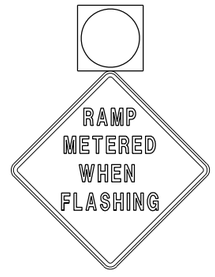

ADVANCE WARNING FLASHER:
(1) W3-8 SIGN (36" X 36")
(1) YELLOW 12" FLASHER

NOTES:

1. IN ORDER TO MEET CLEAR ZONE REQUIREMENTS, FIXED OBJECTS SHALL BE PLACED WITH APPROPRIATE OFFSET AS DEFINED IN THE GDOT DESIGN POLICY MANUAL OR AASHTO'S "ROADSIDE DESIGN GUIDE", OR BE PROTECTED BY GUARDRAIL. FOR GUARDRAIL APPLICATIONS, PROVIDE A MINIMUM SPACING OF 6 FEET BETWEEN THE FACE OF THE GUARDRAIL AND THE FACE OF ALL OBJECTS BEHIND THE GUARDRAIL.
2. CABINETS SHALL BE PLACED 18 FEET FROM EDGE OF RAMP TRAVEL LANE OR AT SHOULDER BREAK POINT, WHICHEVER DISTANCE IS LESS, OR BEHIND GUARDRAIL.
3. FIBER OPTIC/VIDEO CABLING SHALL BE RUN THROUGH TYPE 4S PULL BOXES. POWER CABLING SHALL BE RUN THROUGH TYPE 2 PULL BOXES. TYPE 2 PULL BOXES SHALL BE SPACED A MAXIMUM OF 200 FEET APART ALONG CONDUIT RUNS FOR QUEUE LOOP LEAD-INS. TYPE 4S PULL BOXES SHALL BE SPACED A MAXIMUM OF 750 FEET APART ALONG CONDUIT RUNS.
4. SEPARATE CONDUITS SHALL BE PROVIDED FOR FIBER OPTIC CABLE, IVDS CABLE, SIGNAL CABLE, AND LOOP LEAD-IN CABLE. THE CONTRACTOR SHALL ENSURE THAT THESE CABLES ARE ROUTED THROUGH INDIVIDUAL CONDUITS. LOOP LEAD-IN CABLES FOR THE INTERMEDIATE QUEUE (IQ) DETECTORS AND EXCESSIVE QUEUE (EQ) DETECTORS SHALL ALSO BE ROUTED THROUGH SEPERATE CONDUITS.
5. A SPARE CONDUIT SHALL BE PROVIDED AT ANY BORED CONDUIT RUN LOCATIONS, AND/OR CONDUIT RUNS BETWEEN THE RAMP METER SIGNAL AND THE CABINET.
6. IN-PAVEMENT LOOPS OR MAGNETOMETERS (NOT SHOWN) SHALL BE USED FOR DEMAND, PASSAGE, AND QUEUE DETECTION. IVDS CAMERA DETECTION SHALL BE USED FOR MAINLINE TRAFFIC FLOW DETECTION.
7. IN APPLICATIONS WHERE THE IVDS CAMERA WILL BE INSTALLED ON A LUMINAIRE ARM DIRECTLY OFF OF THE MAST ARM STRAIN POLE (UPRIGHT), THE HEIGHT OF THE UPRIGHT SHALL BE A MINIMUM OF 40'-0" FROM THE RAMP TRAVEL WAY AT THE STOP BAR TO ENSURE PROPER MAINLINE DETECTION.
8. IF SITE CONSTRAINTS PREVENT THESE METHODS FROM BEING FEASABLE, ALTERNATIVE DETECTION METHODS MAY BE UTILIZED ONLY WITH PRIOR APPROVAL FROM GDOT. REFER TO GDOT ITS DETAIL SHEETS FOR MAINLINE DETECTION DEVICE INSTALLATION INFORMATION.
9. IF NEEDED, CCTV CAMERAS SHALL BE PLACED TO MONITOR THE RAMP METER STOP BAR, DISCHARGE AREA, AND THE OPERATION OF RAMP METER SIGNAL HEADS. REFER TO GDOT ITS DETAIL SHEETS FOR INSTALLATION INFORMATION. IF EXISTING CAMERA(S) IN THE AREA CAN VIEW THESE ITEMS/AREAS, NO ADDITIONAL DEVICE SHALL BE REQUIRED.
10. RAMP METERS INSTALLED OUTSIDE OF THE EXISTING GDOT FIBER COMMUNICATIONS NETWORK SHALL HAVE A 4G MODEM INSTALLED WITHIN THE CABINET.
11. MERGE SIGNAGE SHALL BE INSTALLED AS FOLLOWS:
    - FOR RAMPS WITH A STORAGE LENGTH OF LESS THAN 1,000 FEET, INSTALL (1) W4-2R SIGN 325 FEET UPSTREAM OF THE STOP BAR
    - FOR RAMPS WITH A STORAGE LENGTH GREATER OR EQUAL EQUAL TO 1,000 FEET, INSTALL (1) W4-2R SIGN 325 FEET UPSTREAM OF THE STOP BAR AND (1) W4-2R SIGN 150 FEET DOWNSTREAM OF THE ADVANCE WARNING FLASHERS.

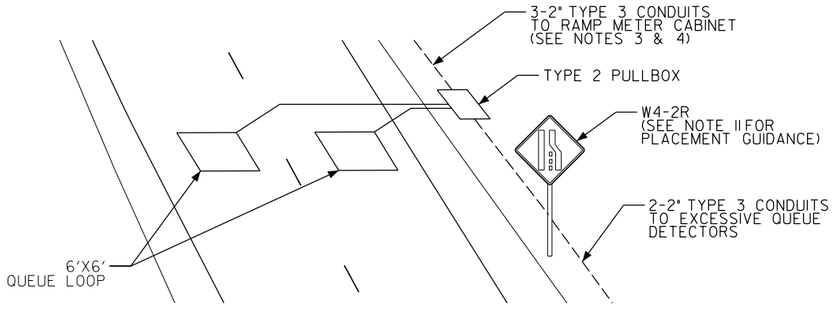

INTERMEDIATE QUEUE (IQ) DETECTOR LOOP PLACEMENT

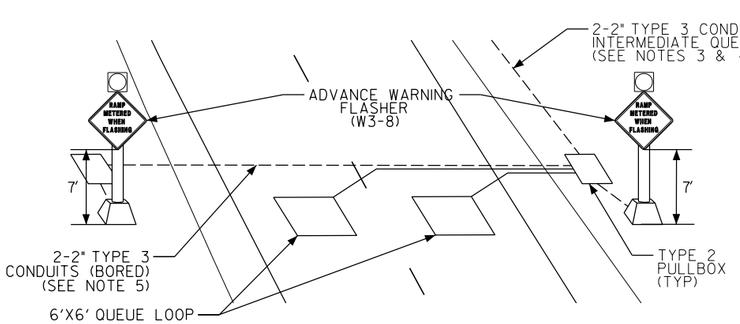

EXCESSIVE QUEUE (EQ) DETECTOR LOOP AND ADVANCE WARNING FLASHER PLACEMENT

DEPARTMENT OF TRANSPORTATION
STATE OF GEORGIA

CONSTRUCTION DETAIL
ITS - RAMP METER INSTALLATION
DUAL LANE METER DETAILS

DATE | REVISION | BY

NOVEMBER 2020
NO SCALE

NUMBER
ITS-51B

GDOT Georgia Department of Transportation | P. I. No.

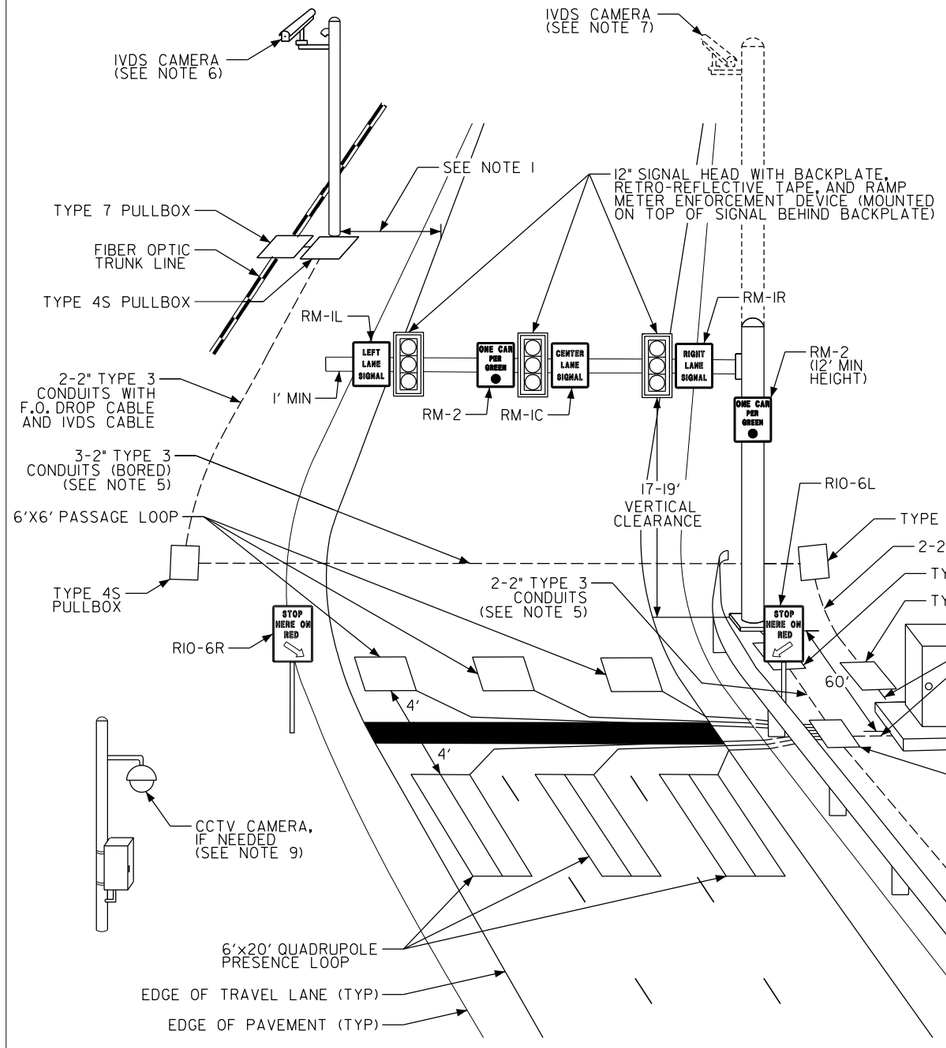

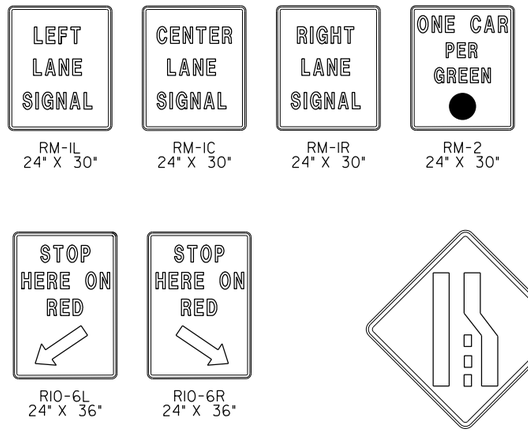

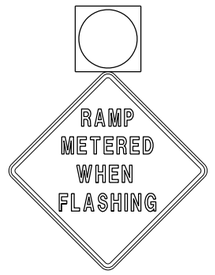

ADVANCE WARNING FLASHER:
(1) W3-8 SIGN (36" X 36")
(1) YELLOW 12" FLASHER

NOTES:

1. IN ORDER TO MEET CLEAR ZONE REQUIREMENTS, FIXED OBJECTS SHALL BE PLACED WITH APPROPRIATE OFFSET AS DEFINED IN THE GDOT DESIGN POLICY MANUAL OR AASHTO'S "ROADSIDE DESIGN GUIDE", OR BE PROTECTED BY GUARDRAIL. FOR GUARDRAIL APPLICATIONS, PROVIDE A MINIMUM SPACING OF 6 FEET BETWEEN THE FACE OF THE GUARDRAIL AND THE FACE OF ALL OBJECTS BEHIND THE GUARDRAIL.
2. CABINETS SHALL BE PLACED 18 FEET FROM EDGE OF RAMP TRAVEL LANE OR AT SHOULDER BREAK POINT, WHICHEVER DISTANCE IS LESS, OR BEHIND GUARDRAIL.
3. FIBER OPTIC/VIDEO CABLING SHALL BE RUN THROUGH TYPE 4S PULL BOXES. POWER CABLING SHALL BE RUN THROUGH TYPE 2 PULL BOXES. TYPE 2 PULL BOXES SHALL BE SPACED A MAXIMUM OF 200 FEET APART ALONG CONDUIT RUNS FOR QUEUE LOOP LEAD-INS. TYPE 4S PULL BOXES SHALL BE SPACED A MAXIMUM OF 750 FEET APART ALONG CONDUIT RUNS.
4. SEPARATE CONDUITS SHALL BE PROVIDED FOR FIBER OPTIC CABLE, IVDS CABLE, SIGNAL CABLE, AND LOOP LEAD-IN CABLE. THE CONTRACTOR SHALL ENSURE THAT THESE CABLES ARE ROUTED THROUGH INDIVIDUAL CONDUITS. LOOP LEAD-IN CABLES FOR THE INTERMEDIATE QUEUE (IQ) DETECTORS AND EXCESSIVE QUEUE (EQ) DETECTORS SHALL ALSO BE ROUTED THROUGH SEPERATE CONDUITS.
5. A SPARE CONDUIT SHALL BE PROVIDED AT ANY BORED CONDUIT RUN LOCATIONS, AND/OR CONDUIT RUNS BETWEEN THE RAMP METER SIGNAL AND THE CABINET.
6. IN-PAVEMENT LOOPS OR MAGNETOMETERS (NOT SHOWN) SHALL BE USED FOR DEMAND, PASSAGE, AND QUEUE DETECTION. IVDS CAMERA DETECTION SHALL BE USED FOR MAINLINE TRAFFIC FLOW DETECTION.
7. IN APPLICATIONS WHERE THE IVDS CAMERA WILL BE INSTALLED ON A LUMINAIRE ARM DIRECTLY OFF OF THE MAST ARM STRAIN POLE (UPRIGHT), THE HEIGHT OF THE UPRIGHT SHALL BE A MINIUMUM OF 40'-0" FROM THE RAMP TRAVEL WAY AT THE STOP BAR TO ENSURE PROPER MAINLINE DETECTION.
8. IF SITE CONSTRAINTS PREVENT THESE METHODS FROM BEING FEASABLE, ALTERNATIVE DETECTION METHODS MAY BE UTILIZED ONLY WITH PRIOR APPROVAL FROM GDOT. REFER TO GDOT ITS DETAIL SHEETS FOR MAINLINE DETECTION DEVICE INSTALLATION INFORMATION.
9. IF NEEDED, CCTV CAMERAS SHALL BE PLACED TO MONITOR THE RAMP METER STOP BAR, DISCHARGE AREA, AND THE OPERATION OF RAMP METER SIGNAL HEADS. REFER TO GDOT ITS DETAIL SHEETS FOR INSTALLATION INFORMATION. IF EXISTING CAMERA(S) IN THE AREA CAN VIEW THESE ITEMS/AREAS, NO ADDITIONAL DEVICE SHALL BE REQUIRED.
10. RAMP METERS INSTALLED OUTSIDE OF THE EXISTING GDOT FIBER COMMUNICATIONS NETWORK SHALL HAVE A 4G MODEM INSTALLED WITHIN THE CABINET.
11. MERGE SIGNAGE SHALL BE INSTALLED AS FOLLOWS:
    - FOR RAMPS WITH A STORAGE LENGTH OF LESS THAN 1,000 FEET, INSTALL (1) W4-2R SIGN 325 FEET UPSTREAM OF THE STOP BAR
    - FOR RAMPS WITH A STORAGE LENGTH GREATER OR EQUAL EQUAL TO 1,000 FEET, INSTALL (1) W4-2R SIGN 325 FEET UPSTREAM OF THE STOP BAR AND (1) W4-2R SIGN 150 FEET DOWNSTREAM OF THE ADVANCE WARNING FLASHERS.

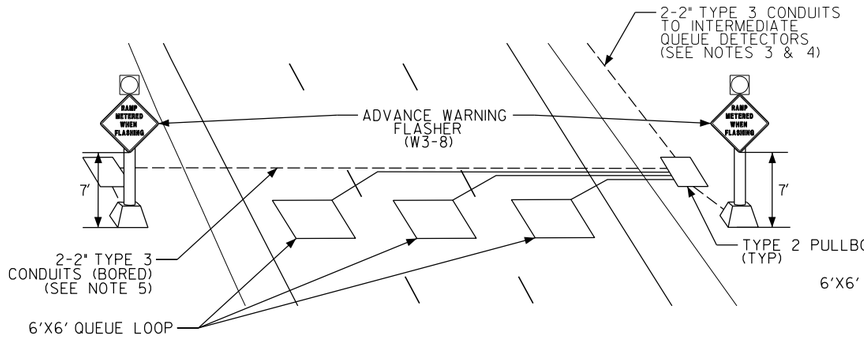

EXCESSIVE QUEUE (EQ) DETECTOR LOOP AND ADVANCE WARNING FLASHER PLACEMENT

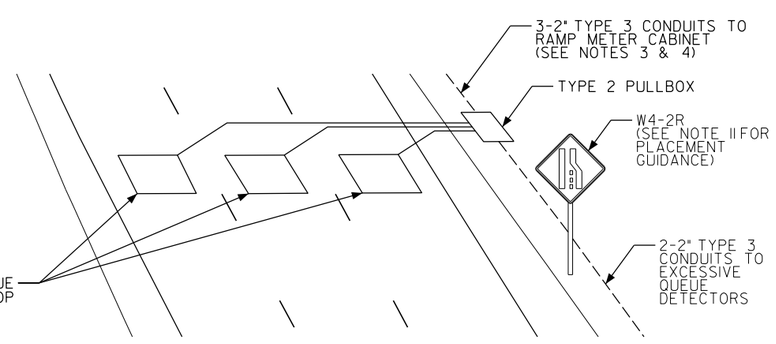

INTERMEDIATE QUEUE (IQ) DETECTOR LOOP PLACEMENT

DATE	DEPARTMENT OF TRANSPORTATION STATE OF GEORGIA	
REVISION	CONSTRUCTION DETAIL ITS - RAMP METER INSTALLATION TRIPLE LANE METER DETAILS	
BY	NOVEMBER 2020 NO SCALE	NUMBER ITS-51C

GDOT Georgia Department of Transportation | P. I. No.

EQUIPMENT CABINET ASSEMBLY DETAIL: GDOT ITS CABINET TYPES 1, 2 & 3

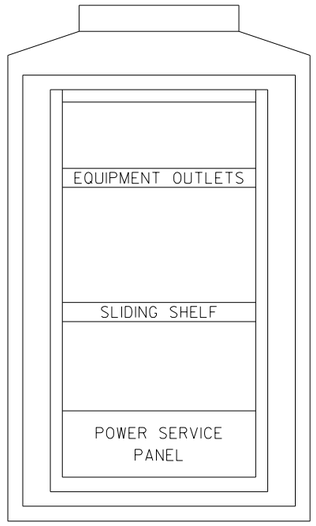

NOTES:
1. DRAWINGS ARE NOT TO SCALE. REFER TO SECTION 939 OF THE SPECIFICATIONS FOR CABINET DIMENSIONS
2. SLIDING SHELF TO BE OMITTED IN GDOT TYPE 1 ITS CABINET

EQUIPMENT CABINET ASSEMBLY DETAIL: GDOT ITS CABINET TYPE 4

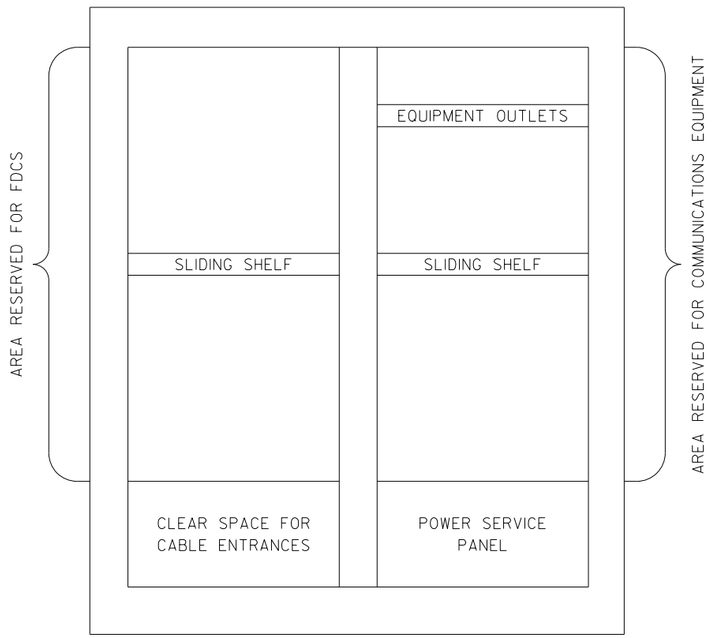

GDOT ITS CABINET POWER SERVICE PANEL WIRING

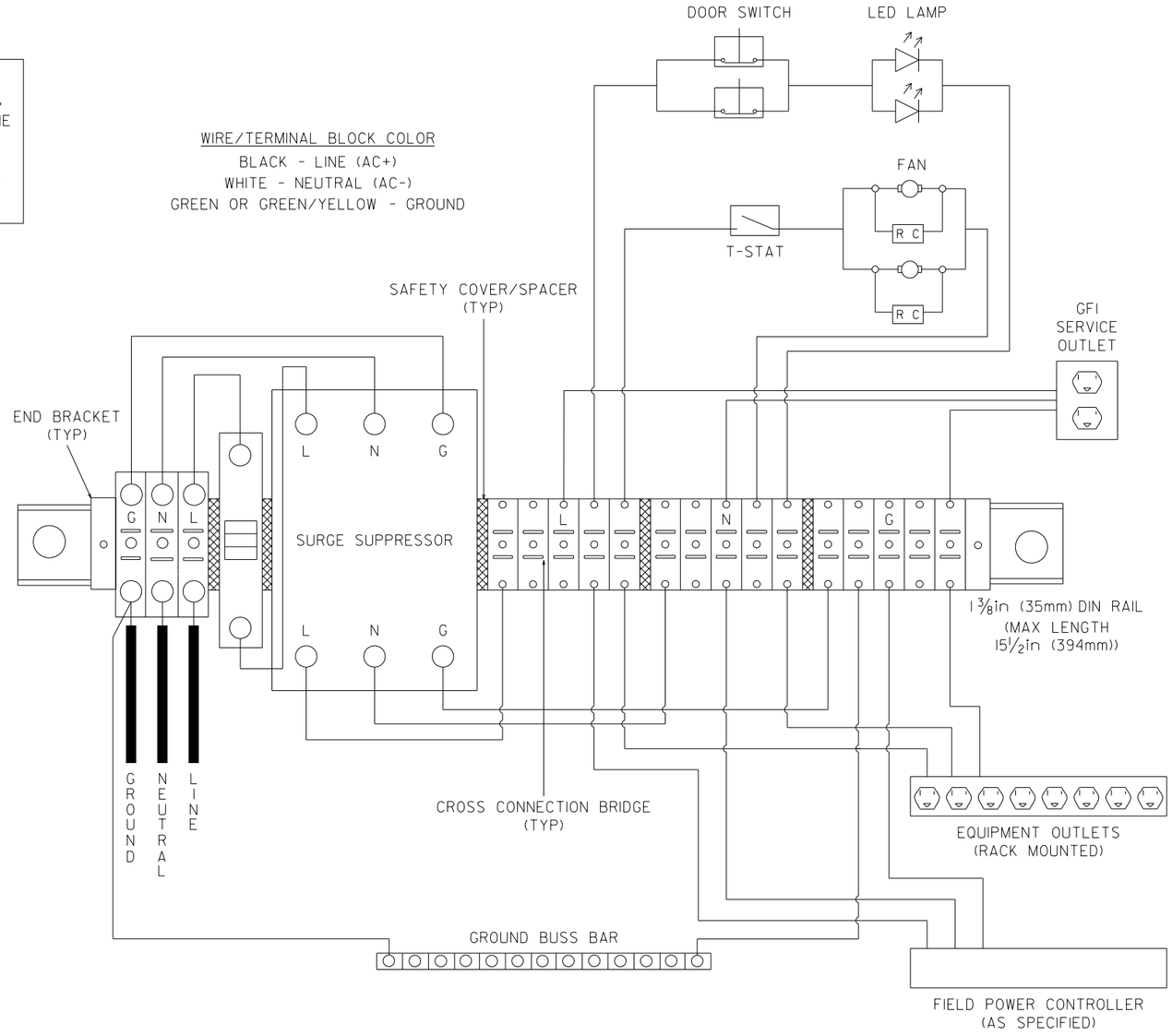

NOTES:
1. GDOT TYPE 1 ITS CABINET HAS ONE FAN WITH ONE THERMOSTAT
2. GDOT TYPE 4 ITS CABINET HAS FOUR LAMPS WITH FOUR DOOR SWITCHES

DEPARTMENT OF TRANSPORTATION
STATE OF GEORGIA

CONSTRUCTION DETAIL

ITS-CABINET DETAILS

DATE | REVISION | BY

NOVEMBER 2020
NO SCALE

NUMBER
ITS-64

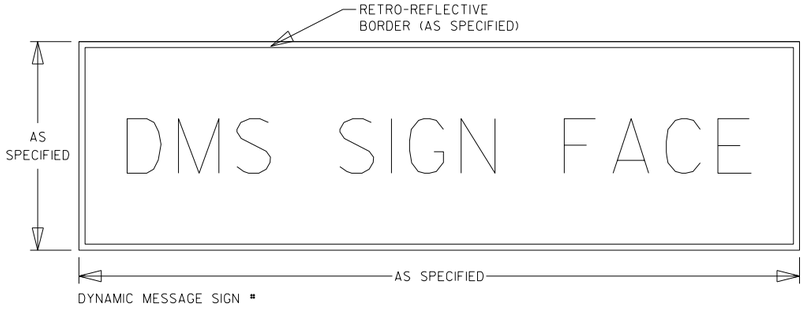

GENERAL NOTES:

1. FOR WALK-IN DMS (TYPES I & 2), DOOR FOR WALK-IN ENCLOSURE TO BE INSTALLED ON THE RIGHT SIDE AND HINGED TO THE RIGHT. DESIGN DMS HOUSING THAT ACCOMODATES THE SUPPORT STRUCTURE, ACCESS PLATFORM, ACCESS DOOR, AND SAFETY RAILS. SEE SECTION 631 FOR DMS HOUSING DESIGN REQUIREMENTS.
2. FOR WALK-IN DMS (TYPES I &2), A WALKWAY SHALL BE CONSTRUCTED AT THE RIGHT EDGE OF THE SIGN THAT IS PERPENDICULAR TO THE SIGN FACE AND SHALL EXTEND THE FULL DEPTH OF THE SIGN. PROVIDE ACCESS PLATFORM AND HANDRAIL THAT EXTEND BETWEEN THE ACCESS DOOR AND THE LANE EDGE OF THE OUTSIDE LANE. SEE SECTION 638 OF THE STANDARD SPECIFICATIONS.
3. THE CONTRACTOR SHALL VERIFY THAT THE DMS MANUFACTURER'S REQUIREMENTS AND RECOMMENDATIONS MEET OR EXCEED GDOT GROUNDING AND SURGE PROTECTION REQUIREMENTS. THE CONTRACTOR SHALL PROVIDE DMS SYSTEM GROUNDING AND SURGE PROTECTION CONSISTENT WITH GDOT'S REQUIREMENTS AND RECOMMENDATIONS. THE CONTRACTOR SHALL SUBMIT GROUNDING AND SURGE PROTECTION EQUIPMENT INFORMATION AS PART OF THE DMS SYSTEM SUBMITTAL REQUIREMENTS.
4. FRONT ACCESS TYPE DMS MAY ALSO BE PLACED CENTERED OVER ANY TRAVEL LANE.
5. AS SHOWN ON PLANS, INSTALL DMS ON STRUCTURES LOCATED OUTSIDE THE CLEAR ZONE LIMITS WHERE POSSIBLE.
6. IN ORDER TO MEET CLEAR ZONE REQUIREMENTS, FIXED OBJECTS SHALL BE PLACED WITH APPROPRIATE OFFSET AS DEFINED IN THE GDOT DESIGN POLICY MANUAL OR AASHTO'S "ROADSIDE DESIGN GUIDE", OR BE PROTECTED BY GUARDRAIL. FOR GUARDRAIL APPLICATIONS, PROVIDE A MINIMUM SPACING OF 6 FEET BETWEEN THE FACE OF THE GUARDRAIL AND THE FACE OF ALL OBJECTS BEHIND THE GUARDRAIL."

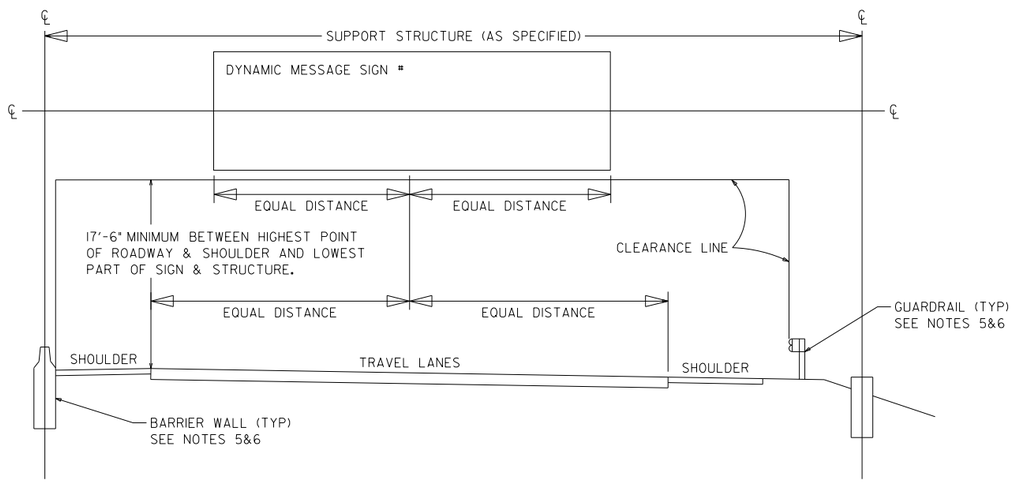

CLEARANCE DIAGRAM FOR DYNAMIC MESSAGE SIGNS:
TYPE I (SIGN BRIDGE) SUPPORT STRUCTURE

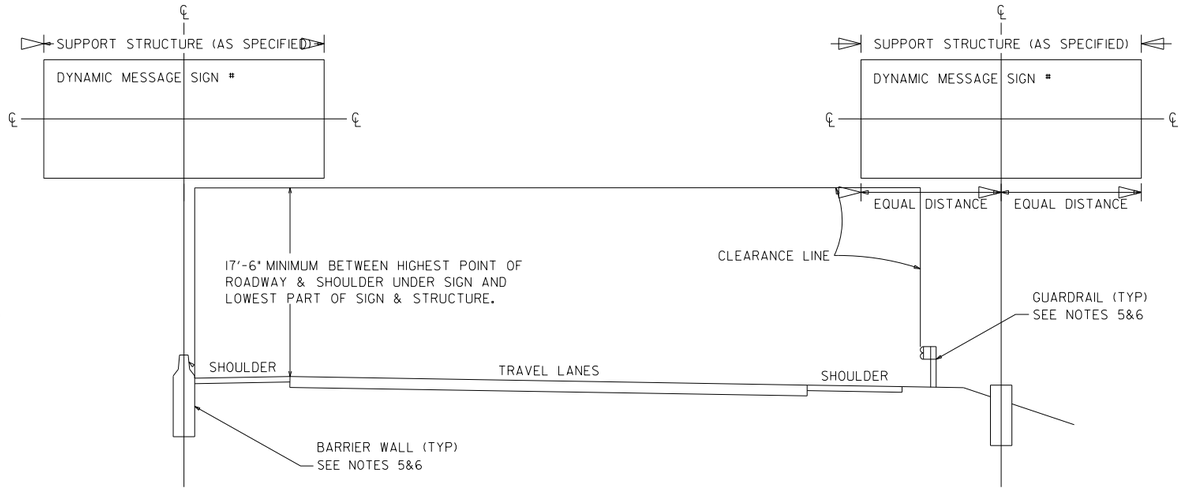

CLEARANCE DIAGRAM FOR DYNAMIC MESSAGE SIGNS:
TYPE III (BUTTERFLY) SUPPORT STRUCTURE

DEPARTMENT OF TRANSPORTATION
STATE OF GEORGIA

CONSTRUCTION DETAIL

ITS-DYNAMIC MESSAGE SIGN

DATE | REVISION | BY

NOVEMBER 2020
NO SCALE

NUMBER
ITS-65

STATE	PROJECT NUMBER	SHEET NO.	TOTAL SHEETS
GA.			

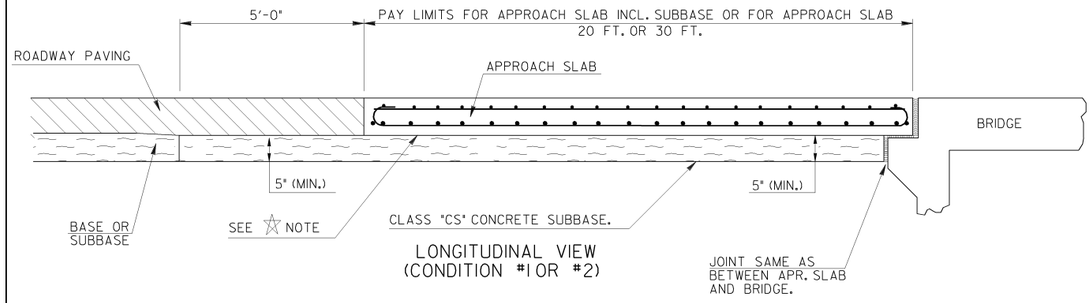

LONGITUDINAL VIEW
(CONDITION #1 OR #2)

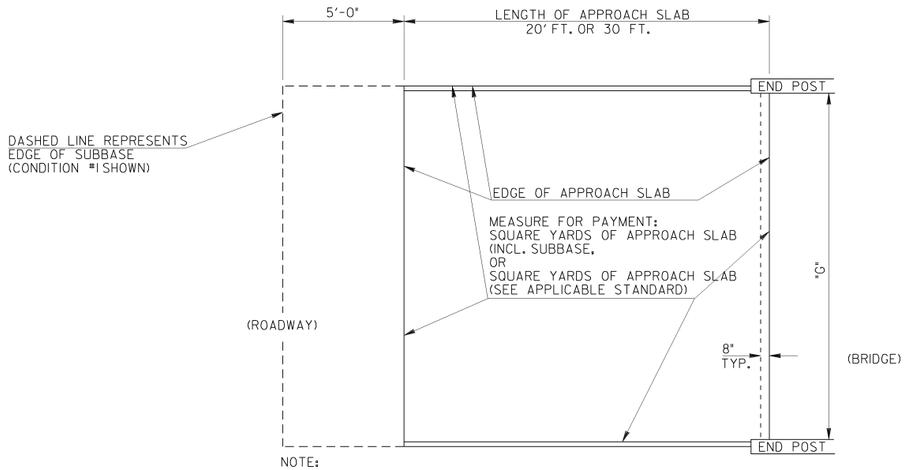

NOTE:
PAY LIMITS ARE ALWAYS BASED UPON SURFACE OF APPROACH SLAB ONLY (EITHER CONDITION).

PLAN VIEW

"C"	⊗ CUBIC YARDS OF SUBBASE FOR APPROACH SLAB			
	STD. 9017K	STD. 9017L	STD. 9017P	STD. 9017Q
28'-0"	15.63	11.08		
29'-6"			16.47	11.67
30'-0"				
31'6"			17.54	12.43
32'-0"	17.75	12.58		
33'-6"			18.60	13.18
34'-0"				
35'-6"			19.67	13.94
36'-0"	19.87	14.08		
37'-6"			20.74	14.70
38'-0"				
39'-6"			21.81	15.46
40'-0"	21.99	15.59		
41'-6"			22.88	16.21
42'-0"	23.05	16.34		
43'-6'			23.94	16.97
44'-0"				
45'-6"			25.01	17.73
46'-0"		17.84		
47'-6"			26.08	
48'-0"	26.23	18.59		
49'-6"			27.15	
50'-0"				
51'-6"			28.22	
52'-0"	28.35			
53'-6"			29.29	
54'-0"				
55'-6"			30.35	
56'-0"				
57'-6"			31.42	
58'-0"	31.53			
59'-6"			32.49	
60'-0"	32.59			
61'-6"			35.56	
62'-0"	33.65			
63'-6"			34.63	
64'-0"	34.71			
65'-6"			35.70	
66'-0"	35.77			

⊗ QUANTITES GIVEN IN THE TABLE ARE BASED UPON MINIMUM DIMENSIONS AND ARE GIVEN FOR INFORMATION ONLY.

CUBIC YARDS OF SUBBASE FOR USE WITH STD. 9017M, STD. 9017N OR FOR USE WITH SLAB SIZES NOT GIVEN IN TABLE, MAY BE ESTIMATED WITH THE FOLLOWING FORMULAE:

FOR 30' APPROACH SLABS:
CU. YARDS = 0.5298 TIMES SLAB WIDTH (IN FEET)

FOR 20' APPROACH SLABS:
CUBIC YARDS = 0.3755 TIMES SLAB WIDTH (IN FEET)

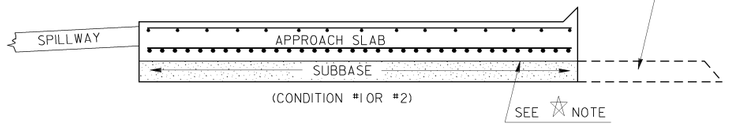

IF MAT'L. UNDER APPROACH SLAB IS FLEXIBLE ENOUGH TO ALLOW DRIVING OF GUARDRAIL POST, THE LIMITS SHALL BE EXTENDED SIMILARLY TO THAT ON THE ROADWAY.

CROSS SECTIONAL VIEW

NOTE: SUBBASE SHOWN ABOVE FOR APPROACH SLAB WITH SPILLWAY ON ONE SIDE AND SLOPED EDGE ON OTHER SIDE. SUBBASE DETAILS SIMILAR FOR APPROACH SLAB WITH TRANSITION CURB OR OTHER DRAINAGE STRUCTURES.

☆ NOTE:
IF "CS" CONCRETE OR P.C. CONC. SUBBASE IS USED, CLEAR POLYETHYLENE SHEETING 8 MILS, MIN. THICKNESS, WITH A 6" OVERLAP, UNIFORMALLY LAYED, SHALL BE REQUIRED UNDER THE APPROACH SLAB TO PREVENT BONDING POLYETHYLENE SHEETING SHALL BE NEW, UNUSED AND FREE OF HOLES, RIPS AND TEARS.

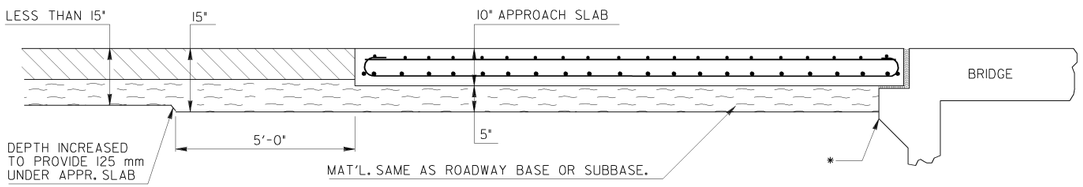

LONGITUDINAL VIEW
(CONDITION #2)

CONDITION #1:
WHERE THE CONTRACT FOR THE BRIDGE AND APPROACH SLABS IS LET SEPARATE FROM THE ROADWAY PAVING CONTRACT, THE SUBBASE FOR THE APPROACH SLAB WILL BE CLASS "CS" CONCRETE ACCORDING TO SECTION 500. IN THIS CASE, PAYMENT FOR THE SUBBASE WILL BE INCLUDED IN THE PAYMENT FOR THE APPROACH SLAB.

CONDITION #2:
WHERE THE ROADWAY PAVING AND THE BRIDGE ARE LET UNDER THE SAME CONTRACT, THE APPROACH SLAB SUBBASE MAY BE EITHER CLASS "CS" CONCRETE OR MAY BE THE SAME MATERIAL AS REQUIRED FOR THE ROADWAY BASE OR SUBBASE SUCH AS GRADED AGGREGATE, P.C. CONC. SUBBASE, ETC. IN THIS CASE, PAYMENT FOR THE SUBBASE WILL BE INCLUDED IN THE PAYMENT FOR THE APPROACH SLAB.

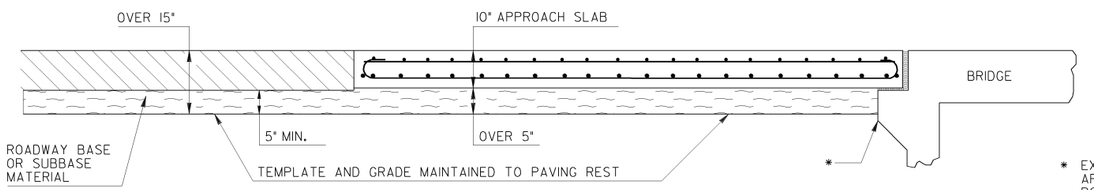

LONGITUDINAL VIEW
(CONDITION #2)

* EXPANSION JOINT REQ'D. SAME AS BETWEEN APPROACH SLAB & BRIDGE, IF SUBBASE IS PORTLANT CEMENT CONCRETE OR CLASS "CS" CONCRETE.

G.L.O.	BY	REVISION	DATE
		REVISED NOTES	3-28-06
		PAY ITEM - COND. #2	6-14-88

DEPARTMENT OF TRANSPORTATION
STATE OF GEORGIA

CONSTRUCTION DETAIL

SUBBASES FOR APPROACH SLABS

NO SCALE

REV. & REDRAWN OCT. 1985

NUMBER
M-02

STATE	PROJECT NUMBER	SHEET NO.	TOTAL SHEETS
GA.			

NOTE:
TYPE A MEDIAN CROSSOVERS ARE FOR USE ONLY WHERE THE FUTURE TOTAL VOLUME OF THE COMBINED LEFT TURNING MOVEMENTS AND U-TURNS DO NOT EXCEED 20 VEHICLES PER HOUR, DESIRABLY OR WHERE DRAINAGE CONSIDERATIONS MAKE THE TYPE B MEDIAN CROSSOVER DIFFICULT TO CONSTRUCT.

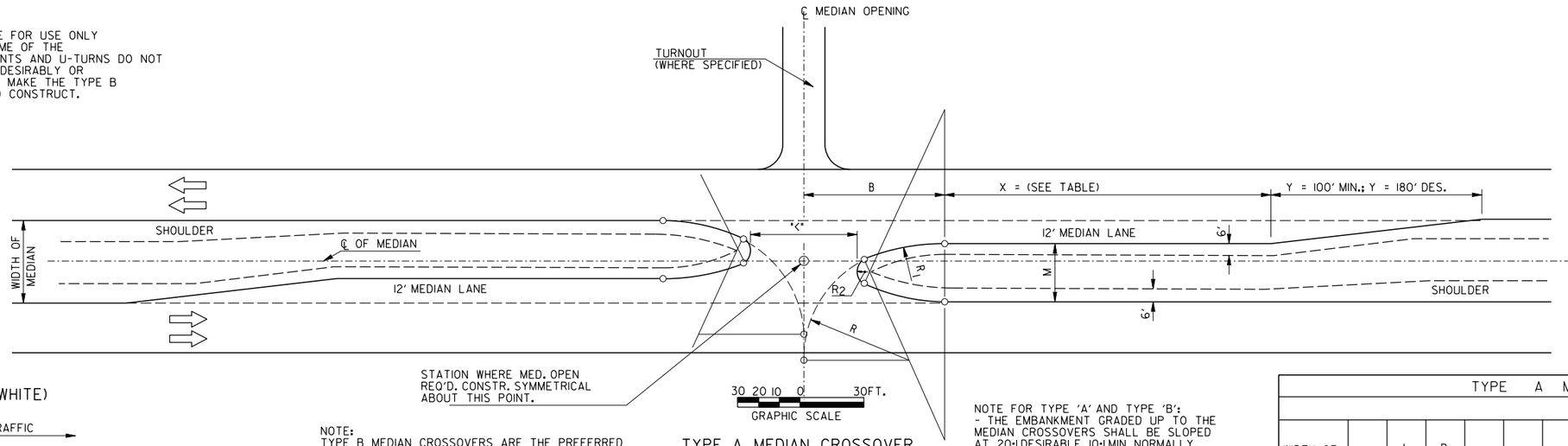

TYPE A MEDIAN CROSSOVER

NOTE:
TYPE B MEDIAN CROSSOVERS ARE THE PREFERRED TYPE OF MEDIAN CROSSOVER. TYPE A MEDIAN CROSSOVER CAN BE USED IN LOW VOLUME SITUATIONS WHERE DRAINAGE CONSIDERATIONS MAKE THE TYPE A MEDIAN CROSSOVER A MORE DESIRABLE OPTION.

NOTE FOR TYPE 'A' AND TYPE 'B':
- THE EMBANKMENT GRADED UP TO THE MEDIAN CROSSOVERS SHALL BE SLOPED AT 20:1 DESIRABLE, 10:1 MIN. NORMALLY, WITH A 6:1 ACCEPTABLE FOR SPEEDS UNDER FORTY-FIVE MILES PER HOUR.

TYPE A MEDIAN CROSSOVERS ●

WIDTH OF MEDIAN	M	L NORM	B NORM	R	R_1	R_2	DECELERATION LENGTH = X△ (FT) DESIGN SPEED 45 MPH	55 MPH	65 MPH	Y (DES)
40	28	50	67	50	90	6	400(250) MIN	525(400) MIN	700(525) MIN	180
44	32	50	67	50	90	8	400(250) MIN	525(400) MIN	700(525) MIN	180
64	52	44	95	50	150	10	400(250) MIN	525(400) MIN	700(525) MIN	180

△ "X" DIMENSION IS FOR DECELERATION ONLY, DOES NOT ACCOUNT FOR ANY STORAGE NEEDED. MIN. VALUES FOR "X" ARE ONLY TO BE USED WHERE SPACING BETWEEN MEDIAN OPENINGS DOES NOT ALLOW FOR THE MORE DESIRABLE LENGTH.

DETAIL "B" (WHITE)

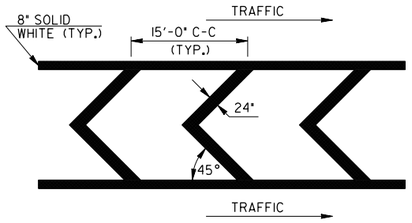

NOTE:
SQUARE YARDS OF STRIPING SHOWN ON PLAN AND SUMMARY SHEETS INCLUDES THE AREA WITHIN THE BORDERS, AS WELL AS THE 8" SOLID WHITE BORDER.

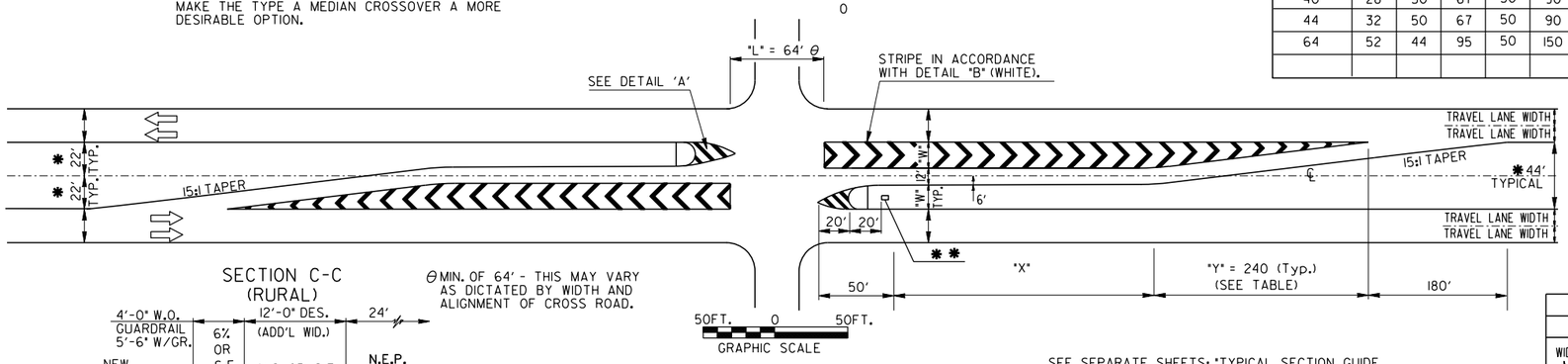

TYPE B MEDIAN CROSSOVER

SEE SEPARATE SHEETS: "TYPICAL SECTION GUIDE FOR TYPE "B" MEDIAN CROSSOVER."

NOTE:
PAVEMENT OF MEDIAN CROSSOVERS (ALL TYPES) SHALL BE SLOPED FOR SURFACE DRAINAGE AS SPECIFIED.

TYPE B MEDIAN CROSSOVERS ●

WIDTH OF MEDIAN	DECELERATION LENGTH = △(FT.) DESIGN SPEED 45 MPH	55 MPH	65 MPH	Y	W
44	150(50MIN)	300(150MIN)	450(300MIN)	240	16
64	N/A	150(50MIN)	300(150MIN)	390	26

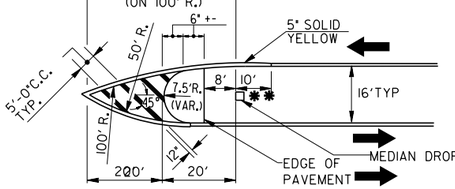

DETAIL "A" (YELLOW)

20FT. 0 20FT.
GRAPHIC SCALE

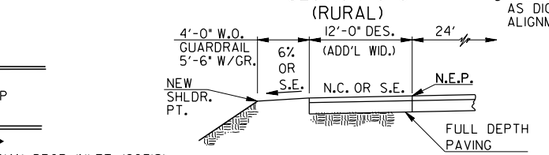

θ MIN. OF 64' - THIS MAY VARY AS DICTATED BY WIDTH AND ALIGNMENT OF CROSS ROAD.

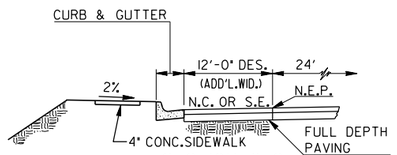

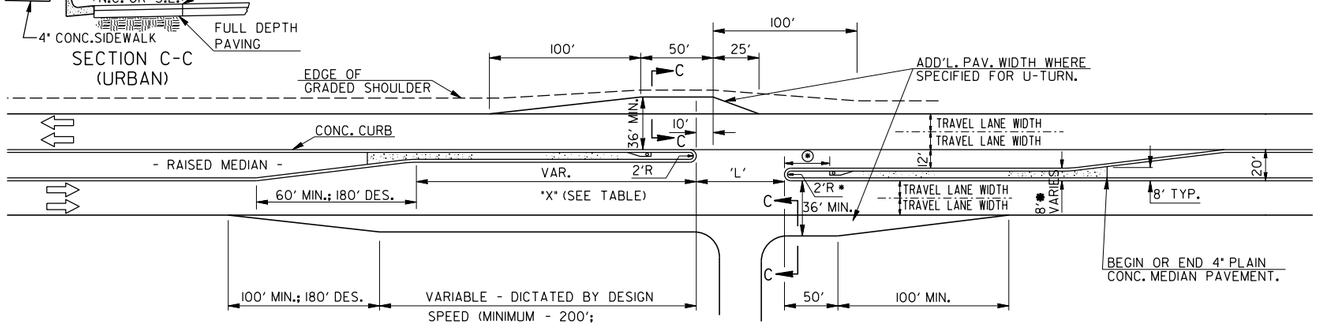

"L" - 84' MIN. (FOR TYP. C)

TYPE C MEDIAN CROSSOVER

50FT. 0 50FT.
GRAPHIC SCALE

TYPE C MEDIAN CROSSOVERS ●	
DECELERATION LENGTH = X ■	
DESIGN SPEED	X (FT)
35 MPH	300(200MIN.)
45 MPH	400(250MIN.)

■ "X" DIMENSION IS FOR DECELERATION ONLY, DOES NOT ACCOUNT FOR ANY STORAGE NEEDED.

NOTE:
- THE TYPE C MEDIAN CROSSOVER SHOWN IS TYPICAL FOR ONE SIDE ROAD CONNECTION. (T-INTERSECTION)
- THE BOTTOM PORTION OF TYPE C IS APPLICABLE ON EACH SIDE OF THE CROSSOVER FOR A CROSS ROAD INTERSECTION OR SIDE ROAD CONNECTION ON EACH SIDE. (X-INTERSECTION)
- THE TOP PORTION OF TYPE C DETAIL IS APPLICABLE ON EACH SIDE OF THE MEDIAN OPENING WITHOUT ANY SIDE ROAD. (U-TURNS ONLY)

* DIMENSION MAY VARY WHERE SPECIFIED IN THE PLANS. ADJUSTMENTS TO BE SHOWN FOR ANY WIDTH OTHER THAN 44 FT.

● DIMENSIONS IN FEET (TYP)

** MEDIAN DROP INLET (903IS) CANNOT BE PLACED CLOSER THAN 20 FEET BACK FROM END OF NOSE OF THE MEDIAN.

MEDIAN DROP INLET (903IS) IS NOT RECOMMENDED FOR TYPE B MEDIAN CROSSOVERS WHERE GRADES ARE GREATER THAN 3%.

⊙ IF DRAINAGE STRUCTURE IS REQUIRED IN THE MEDIAN, THE DESIRABLE OFFSET IS 25 FT. OR MORE FROM THE CROSSOVER OPENING.

SPECIAL NOTE:
THE "L" DIMENSIONS SHOWN FOR TYPE A, TYPE B, AND TYPE C CROSSOVERS ARE BASED UPON 50FT. CONTROL RADII FOR LEFT TURNS AND INTERSECTING CROSSROADS OF TWO 12 FT. LANES PERPENDICULAR TO THE MAINLINE. DIFFERENT "L" DIMENSIONS MAY BE SPECIFIED AT LOCATIONS WHERE WARRANTED BY OTHER CONDITIONS.

DEPARTMENT OF TRANSPORTATION
STATE OF GEORGIA

CONSTRUCTION DETAILS
MEDIAN CROSSOVERS

SCALE AS SHOWN — APRIL, 2010

DATE / REVISION / BY

DES. MGR
DRW. CJ
CHK. BRE
REVIEW BAS

NUMBER M-03A

STATE	PROJECT NUMBER	SHEET NO.	TOTAL SHEETS
GA.			

TYPE B 32′ MEDIAN CROSSOVER TANGENT

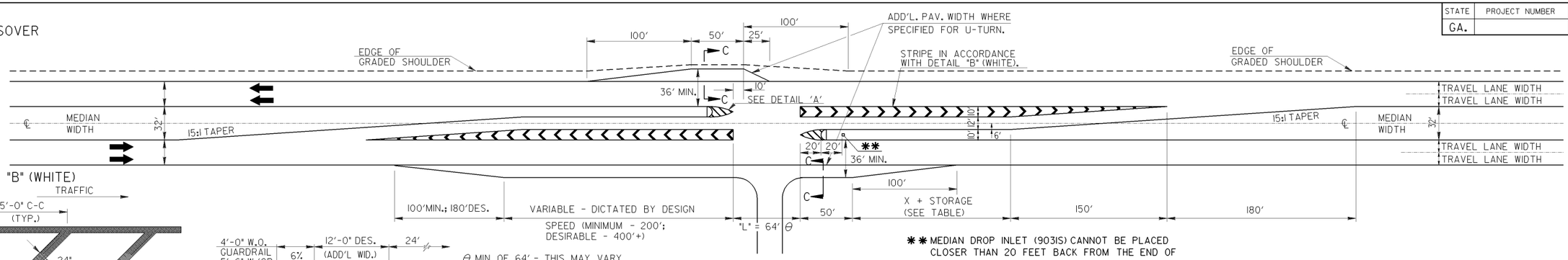

DETAIL "B" (WHITE)

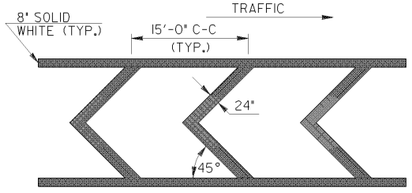

NOTE:
SQUARE YARDS OF STRIPING SHOWN ON PLAN AND SUMMARY SHEETS INCLUDES THE AREA WITHIN THE BORDERS, AS WELL AS THE 8" SOLID WHITE BORDER.

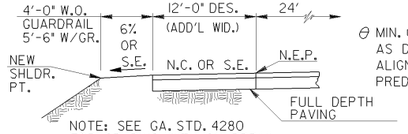

NOTE: SEE GA. STD. 4280 FOR GRADING WITH GUARDRAIL

SECTION C-C (RURAL)

θ MIN. OF 64′ - THIS MAY VARY AS DICTATED BY WIDTH OF MEDIAN, ALIGNMENT OF CROSS ROAD AND PREDOMINANT VEHICLES.

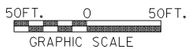

TYPE B 32′ MEDIAN CROSSOVER

** MEDIAN DROP INLET (903IS) CANNOT BE PLACED CLOSER THAN 20 FEET BACK FROM THE END OF NOSE OF THE MEDIAN.

MEDIAN DROP INLET (903IS) IS NOT RECOMMENDED FOR TYPE B 32′ MEDIAN CROSSOVERS WHERE GRADES ARE GREATER THEN 3%.

TYPE B 32′ MEDIAN CROSSOVER (DIM. IN FEET)			
WIDTH OF MEDIAN FEET	DECELERATION LENGTH = Δ X (FT.)+STORAGE LENGTH		
	DESIGN SPEED		
	45 MPH	55 MPH	65 MPH
32	350(200 MIN.) + STORAGE	450(350MIN.) + STORAGE	650(450 MIN.) + STORAGE

Δ X DIMENSION IS FOR DECELERATION ONLY, DOES NOT ACCOUNT FOR ANY STORAGE NEEDED. MIN. VALUES FOR "X" ARE ONLY TO BE USED WHERE SPACING BETWEEN MEDIAN OPENINGS DOES NOT ALLOW FOR THE MORE DESIRABLE LENGTH.

NOTE:
- THE TYPE B 32′ MEDIAN CROSSOVER SHOWN IS TYPICAL FOR ONE SIDE ROAD CONNECTION. (T-INTERSECTION)
- THE BOTTOM PORTION OF TYPE B 32′ MEDIAN CROSSOVER IS APPLICABLE ON EACH SIDE OF THE CROSSOVER FOR A CROSS ROAD INTERSECTION OR SIDE ROAD CONNECTION ON EACH SIDE. (X-INTERSECTION)
- THE TOP PORTION OF THE TYPE B 32′ MEDIAN CROSSOVER IS APPLICABLE ON EACH SIDE OF THE MEDIAN OPENING WITHOUT ANY SIDE ROAD. (U-TURNS ONLY)
- PAVEMENT OF MEDIAN CROSSOVER (ALL TYPES) SHALL BE SLOPED FOR SURFACE DRAINAGE AS SPECIFIED.

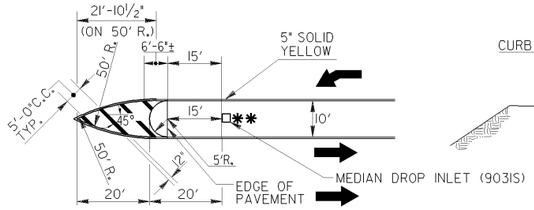

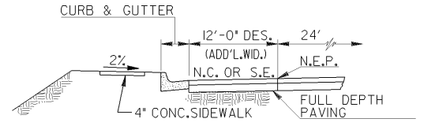

SECTION C-C (URBAN)



DETAIL "A" (YELLOW)

TYPE B 32′ MEDIAN CROSSOVER SUPERELEVATION

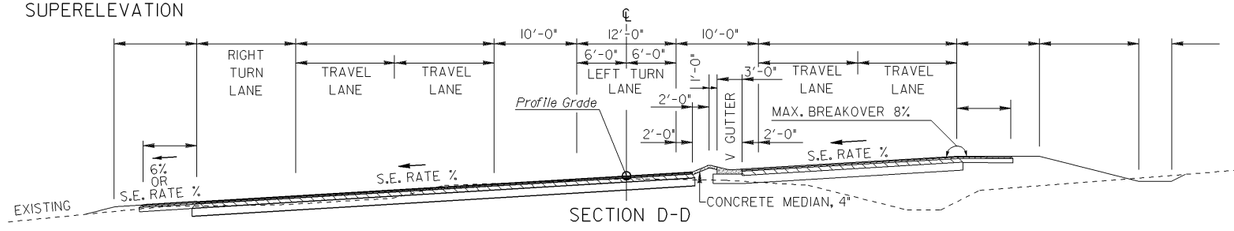

SECTION D-D

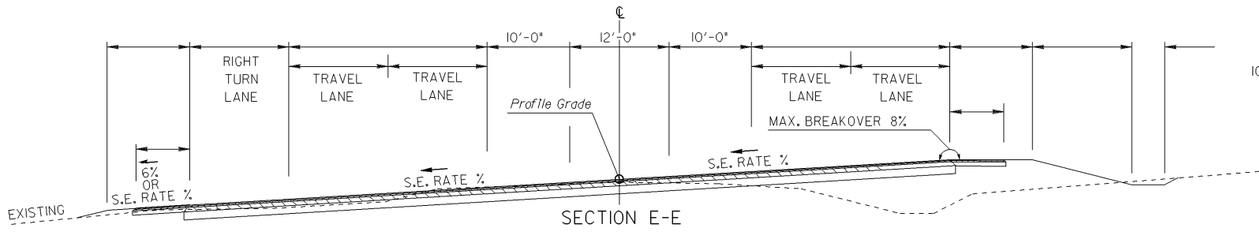

SECTION E-E

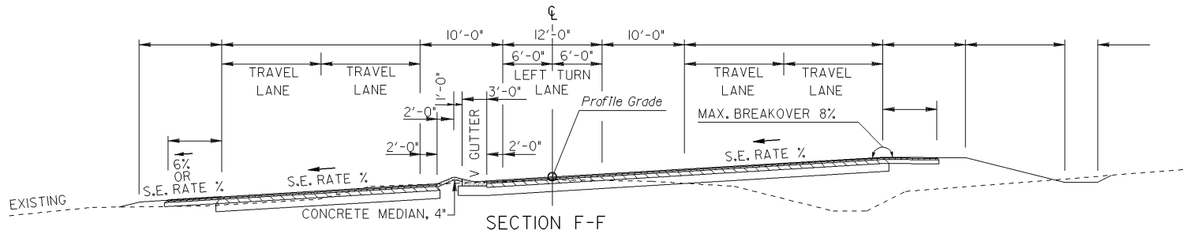

SECTION F-F

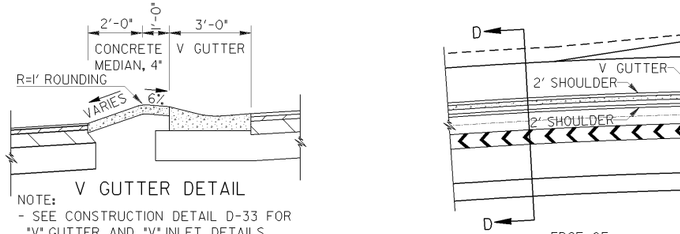

V GUTTER DETAIL

NOTE:
- SEE CONSTRUCTION DETAIL D-33 FOR "V" GUTTER AND "V" INLET DETAILS.

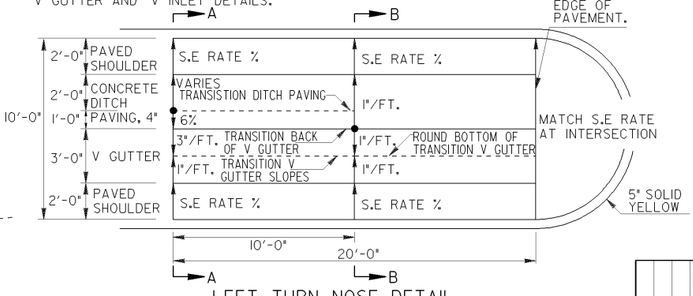

LEFT TURN NOSE DETAIL

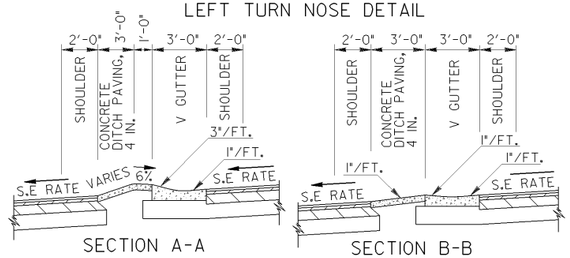

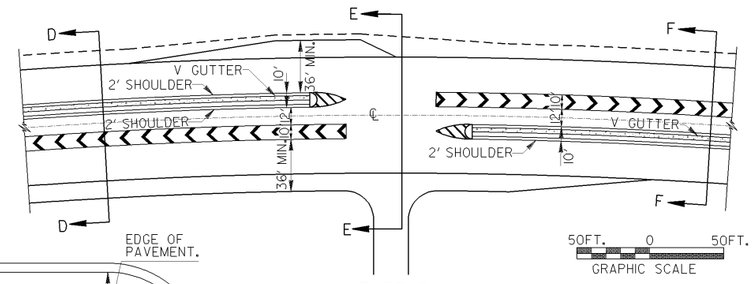

TYPE B 32′ MEDIAN CROSSOVER SUPERELEVATED SECTION

SPECIAL NOTE:
THE "L" DIMENSIONS SHOWN FOR TYPE B 32′ MEDIAN CROSSOVER ARE BASED UPON 50 FT. CONTROL RADII FOR LEFT TURNS AND INTERSECTING CROSSROADS OF TWO 12 FT. LANES PERPENDICULAR TO THE MAINLINE. DIFFERENT "L" DIMENSIONS MAY BE SPECIFIED AT LOCATIONS WHERE WARRANTED BY OTHER CONDITIONS.

DEPARTMENT OF TRANSPORTATION
STATE OF GEORGIA

CONSTRUCTION DETAILS

TYPE B 32′ MEDIAN CROSSOVERS

SCALE AS SHOWN — APRIL, 2010

DATE	REVISION	BY
		DES. GLO
		DRW. GLO
		CHK. BRE
		REVIEW BAS

NUMBER M-03B

STATE	PROJECT NUMBER	SHEET NO.	TOTAL SHEETS
GA.			

FOUNDATION DEPTH AND DIAMETER ⚠2

DESIGN HEIGHT "H"	PIEDMONT (POST SPACING)									COASTAL PLAIN (POST SPACING)								
	10′-0″			15′-0″			20′-0″			10′-0″			15′-0″			20′-0″		
	DEPTH	DIAMETER	CORNER POST DIAMETER	DEPTH	DIAMETER	CORNER POST DIAMETER	DEPTH	DIAMETER	CORNER POST DIAMETER	DEPTH	DIAMETER	CORNER POST DIAMETER	DEPTH	DIAMETER	CORNER POST DIAMETER	DEPTH	DIAMETER	CORNER POST DIAMETER
6′-0″	4′-3″	2′-0″	2′-6″	5′-0″	2′-0″	2′-6″	6′-0″	2′-0″	2′-6″	6′-6″	2′-0″	3′-0″	7′-9″	2′-0″	3′-0″	8′-9″	2′-0″	3′-0″
8′-0″	5′-3″	2′-0″	2′-6″	6′-3″	2′-0″	2′-6″	7′-3″	2′-0″	3′-0″	7′-9″	2′-0″	3′-0″	9′-0″	2′-0″	3′-0″	10′-3″	2′-0″	3′-0″
10′-0″	6′-3″	2′-0″	2′-6″	7′-6″	2′-0″	3′-0″	8′-6″	2′-0″	3′-0″	8′-9″	2′-0″	3′-0″	10′-3″	2′-0″	3′-0″	11′-6″	2′-0″	3′-0″
12′-0″	7′-3″	2′-0″	3′-0″	8′-6″	2′-0″	3′-0″	8′-9″	2′-6″	3′-6″	9′-9″	2′-0″	3′-0″	11′-6″	2′-0″	3′-0″	11′-9″	2′-6″	3′-6″
14′-0″	8′-3″	2′-0″	3′-0″	8′-6″	2′-6″	3′-6″	9′-9″	2′-6″	3′-6″	10′-6″	2′-0″	3′-0″	11′-9″	2′-6″	3′-6″	12′-9″	2′-6″	3′-6″
16′-0″	7′-9″	2′-6″	3′-6″	9′-6″	2′-6″	3′-6″	10′-6″	2′-6″	3′-6″	10′-6″	2′-6″	3′-6″	12′-9″	2′-6″	3′-6″	13′-9″	2′-6″	3′-6″
18′-0″	8′-6″	2′-6″	3′-6″	10′-3″	2′-6″	3′-6″	11′-6″	2′-6″	3′-6″	11′-3″	2′-6″	3′-6″	13′-6″	2′-6″	3′-6″	14′-9″	2′-6″	3′-6″
20′-0″	9′-3″	2′-6″	3′-6″	11′-3″	2′-6″	3′-6″	12′-6″	2′-6″	3′-6″	12′-0″	2′-6″	3′-6″	14′-6″	2′-6″	3′-6″	15′-9″	2′-6″	3′-6″
22′-0″	10′-0″	2′-6″	3′-6″	12′-0″	2′-6″	3′-6″	13′-6″	2′-6″	4′-0″	12′-9″	2′-6″	3′-6″	15′-0″	2′-6″	3′-6″	15′-6″	3′-0″	4′-0″
24′-0″	10′-6″	2′-6″	3′-6″	12′-9″	2′-6″	4′-0″	14′-9″	2′-6″	4′-0″	13′-6″	2′-6″	3′-6″	15′-9″	2′-6″	4′-0″	16′-3″	3′-0″	4′-0″
26′-0″	11′-3″	2′-6″	3′-6″	13′-6″	2′-6″	4′-0″	15′-9″	2′-6″	4′-0″	14′-0″	2′-6″	3′-6″	16′-6″	2′-6″	4′-0″	16′-3″	3′-6″	4′-0″
28′-0″	12′-0″	2′-6″	3′-6″	14′-3″	2′-6″	4′-0″	15′-3″	3′-0″	4′-6″	14′-6″	2′-6″	3′-6″	16′-0″	3′-0″	4′-0″	16′-0″	4′-0″	4′-6″
30′-0″	12′-6″	2′-6″	4′-0″	15′-3″	2′-6″	4′-0″	16′-0″	3′-0″	4′-6″	15′-0″	2′-6″	4′-0″	15′-9″	3′-6″	4′-0″	16′-0″	4′-6″	4′-6″

POST SUMMARY

DESIGN HEIGHT "H"	TYPE B PANELS					TYPE C, F AND G PANELS				
	GROUND MOUNTED (POST SPACING)			WALL MOUNTED	BARRIER MOUNTED	GROUND MOUNTED (POST SPACING)			WALL MOUNTED	BARRIER MOUNTED
	10′-0″	15′-0″	20′-0″	10′-0″	10′-0″	10′-0″	15′-0″	20′-0″	10′-0″	10′-0″
6′-0″	W8XI0	W8XI0	WI0XI2	W8XI0	W8X24	WI0X22	WI0X22	WI0X22	WI0X22	W8X24
8′-0″	W8XI0	WI0XI2	WI2XI4	W8XI0	W8X24	WI0X22	WI0X22	WI0X22	WI0X22	W8X24
10′-0″	WI0XI2	WI2XI6	WI2XI9	WI0XI2	W8X24	WI0X22	WI0X22	WI0X22	WI0X22	W8X24
12′-0″	WI2XI4	WI2XI9	WI4X22	WI0XI5	W8X24	WI0X22	WI0X22	WI2X26	WI0X22	W8X24
14′-0″	WI2XI9	WI4X22	WI4X30	WI0XI9	W8X24	WI0X22	WI2X26	WI4X30	WI0X22	W8X24
16′-0″	WI4X22	WI4X30	WI4X34	WI0X22	W8X24	WI2X26	WI4X30	WI4X34	WI0X22	W8X24
18′-0″	WI4X26	WI4X34	WI4X43	WI0X26	W8X3I	WI2X26	WI4X34	WI4X43	WI0X26	W8X3I
20′-0″	WI4X30	WI4X43	WI4X53	WI0X33	WI0X33	WI4X30	WI4X43	WI4X53	WI0X33	WI0X33
22′-0″	WI4X34	WI4X48	WI4X6I	WI0X39	WI0X39	WI4X34	WI4X48	WI4X6I	WI0X39	WI0X39
24′-0″	WI4X38	WI4X6I	WI4X74	WI0X45	WI2X40	WI4X38	WI4X6I	WI4X74	WI0X45	WI2X40
26′-0″	WI4X43	WI4X6I	WI4X82		WI2X45	WI4X43	WI4X6I	WI4X82		WI2X45
28′-0″	WI4X53	WI4X74	WI4X90			WI4X53	WI4X74	WI4X90		
30′-0″	WI4X6I	WI4X82	WI4XI09			WI4X6I	WI4X82	WI4XI09		

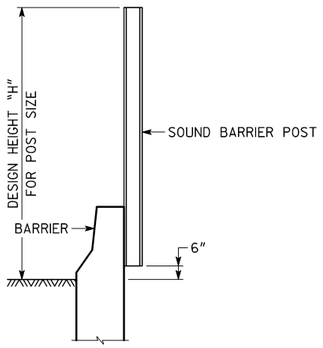

BARRIER MOUNTED SOUND BARRIER

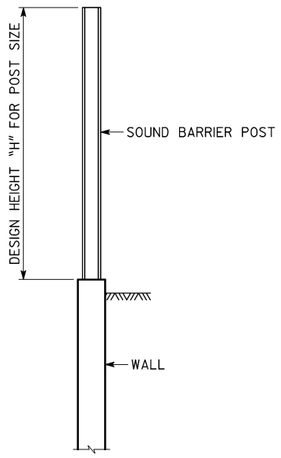

WALL MOUNTED SOUND BARRIER

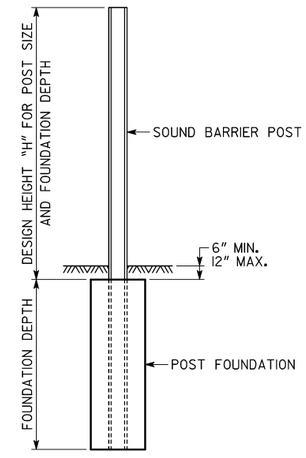

GROUND MOUNTED SOUND BARRIER

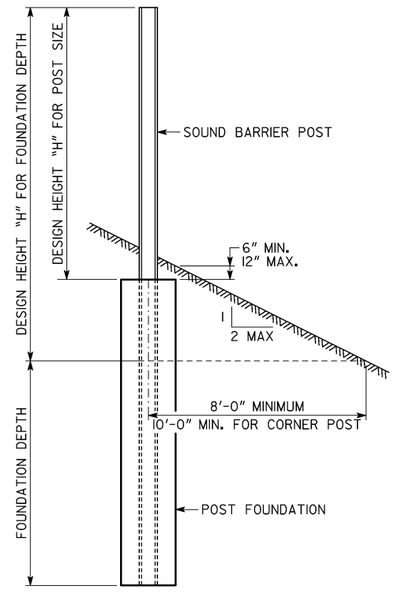

GROUND MOUNTED SOUND BARRIER

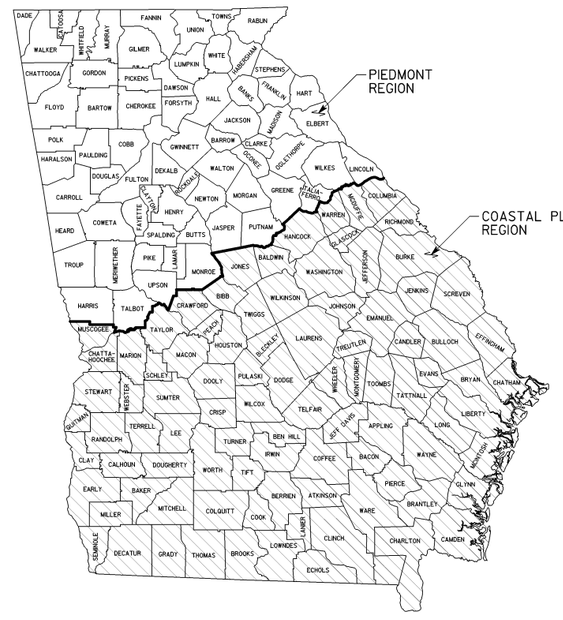

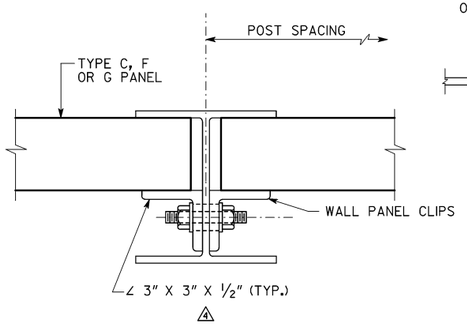

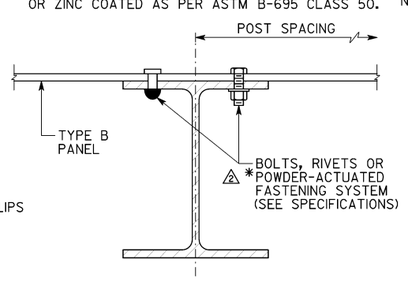

PANEL ATTACHMENT DETAILS
NO SCALE

⚠2 * - FASTENERS SHALL BE STAINLESS STEEL OR SHALL BE GALVANIZED AS PER ASTM A-153 OR ZINC COATED AS PER ASTM B-695 CLASS 50.

NOTES:
1. ALL NUTS, BOLTS, WASHERS, PLATES, INSERTS, ANGLES AND HARDWARE REQUIRED FOR CONSTRUCTING SOUND BARRIERS SHALL BE HOT DIP GALVANIZED IN ACCORDANCE WITH ASTM A-123 OR A-153. SELF-TAPPING SCREWS SHALL BE IN ACCORDANCE WITH SECTION 624 OF THE DOT SPECIFICATIONS. THREADS FOR NUTS AND INSERTS SHALL BE UNC CLASS 2B. ⚠1
2. THREADS FOR BOLTS SHALL BE UNC CLASS 2A. WASHERS SHALL BE COMPATIBLE WITH NUTS AND BOLTS. ⚠4

POSTS FOR BARRIER MOUNTED AND WALL MOUNTED SOUND BARRIER SHALL BE AT 10′-0″ SPACING.

POST SHALL BE ASTM A-36, GALVANIZED AFTER ALL FABRICATION IS COMPLETE. ALL POSTS SHALL BE PLUMB.

⚠4 BARRIER MOUNTED SOUND BARRIERS ACROSS BRIDGES AND ON MSE WALLS SHALL BE TYPE B PANELS AND SHALL BE 12′-0″ AND 18′-0″ MAXIMUM, RESPECTIVELY.

CONCRETE: POST FOUNDATION ----- CLASS A, f'_c = 3000 PSI

REINFORCEMENT STEEL -------- GRADE 60, f_y = 60,000 PSI

NOTE: L 4 X 4 X ⅜ FOR 10′-0″ SPACING AND L 6 X 6 X ½ FOR 15′-0″ AND 20′-0″ SPACING.

PAINT ANGLE AND BOLT TO MATCH TYPE B PANELS.

X = 1⅝″ FOR L 4 X 4 X ⅜ AND 2½″ FOR L 6 X 6 X ½.

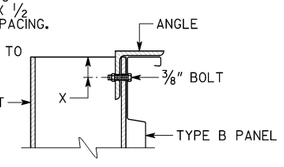

ANGLE ATTACHMENT DETAILS
NO SCALE

DATE	REVISION	BY
4-22-15	REV. ATTACH. DETAIL, NOTE	DPD
1-08-08	REVISED TABLE	SWW
9-6-05	REVISED NOTE	DLC
2-24-05	REVISED NOTE	DLC

DEPARTMENT OF TRANSPORTATION
STATE OF GEORGIA

CONSTRUCTION DETAIL 1 OF 2 SOUND BARRIER FOUNDATION AND POST DETAILS

SCALE ⅜"=1′-0"(UNLESS NOTED) MAY 2004

DESIGNED JPT/DLC
DRAWN DLC
CHECKED SWW
DESIGN GROUP DPD

REVIEWED JPT/MCD
APPROVED PVL

NUMBER N-01A
PAGE 1 OF 2

STATE	PROJECT NUMBER	SHEET NO.	TOTAL SHEETS
GA.			

POST SIZE	GAGE FOR BOLTS
W8X24	3½"
W8X31	5½"
W10X33	5½"
W10X39	5½"
W12X40	5½"
W12X45	5½"

⚠2 CAST-IN-PLACE		
DESIGN HEIGHT "H" ⚠1	ANCHOR DIAMETER D" ⚠5	BOLT HOLE SIZE
6'	⅜"	9/16"
8'	½"	11/16"
10'	⅝"	13/16"
12'	¾"	15/16"
14'	⅞"	1 1/16"
16'	1"	1 3/16"
18'	1 1/8"	1 5/16"
18'-26'	1½" W/PLATE	1 11/16"

⚠1 NOTES: SOUND BARRIER SHALL NOT BE MOUNTED ON TYPE 2 SERIES SIDE BARRIERS.

SOUND BARRIER SHALL ONLY BE ATTACHED TO BARRIERS OR RETAINING WALLS THAT HAVE BEEN SPECIFICALLY DESIGNED FOR THE LOADING FROM SOUND BARRIER.

⚠6

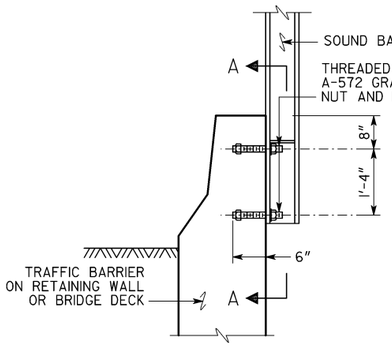

ANCHOR DETAIL FOR SOUND BARRIER BETWEEN 6'-0" AND 18'-0"
CAST-IN-PLACE

⚠6 ⚠2

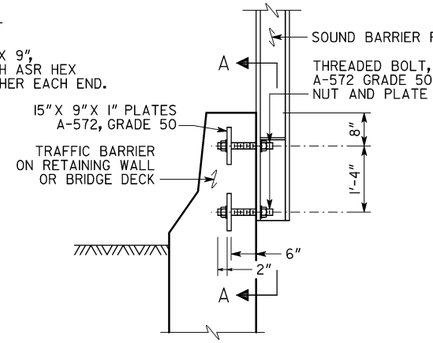

ANCHOR DETAIL FOR SOUND BARRIER BETWEEN 18'-0" AND 26'-0"
CAST-IN-PLACE

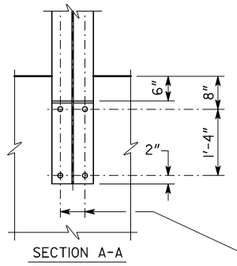

SECTION A-A

℄ BOLT HOLES (SEE CHART FOR GAGE, ANCHOR DIAMETER AND BOLT HOLE SIZE).

⚠3

POST SIZE	PANEL SUPPORT PLATE SIZE *
W8X24,31	4" X 7⅛" X ½"
W10X22	4" X 9⅜" X ½"
W10X26	4" X 9½" X ½"
W10X33,39	4" X 8⅞" X ½"
W12X26	4" X 11½" X ½"
W12X40	4" X 11" X ½"
W12X45	4" X 10⅞" X ½"
W14X30,34,38	4" X 13⅛" X ½"
W14X43	4" X 12⅝" X ½"
W14X48,53	4" X 12½" X ½"
W14X61	4⅞" X 12⅝" X ½"
W14X74,82	4⅞" X 12½" X ½"
W14X90,109	7" X 12⅝" X ½"

* REQUIRED FOR BARRIER MOUNTED SOUND BARRIER ONLY. OPTIONAL FOR GROUND MOUNTED SOUND BARRIER.

NOTE: MAXIMUM HEIGHT ON BRIDGE = 12'-0"
MAXIMUM HEIGHT ON M.S.E. WALL = 18'-0"

DETAILS FOR BARRIER MOUNTED SOUND BARRIER

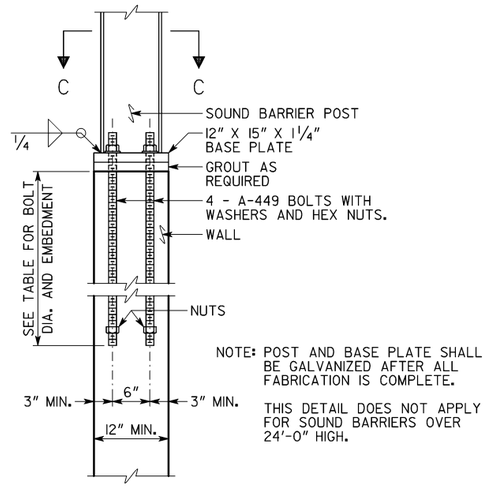

NOTE: POST AND BASE PLATE SHALL BE GALVANIZED AFTER ALL FABRICATION IS COMPLETE.

THIS DETAIL DOES NOT APPLY FOR SOUND BARRIERS OVER 24'-0" HIGH.

DETAILS FOR WALL MOUNTED SOUND BARRIER

10 FOOT POST SPACING

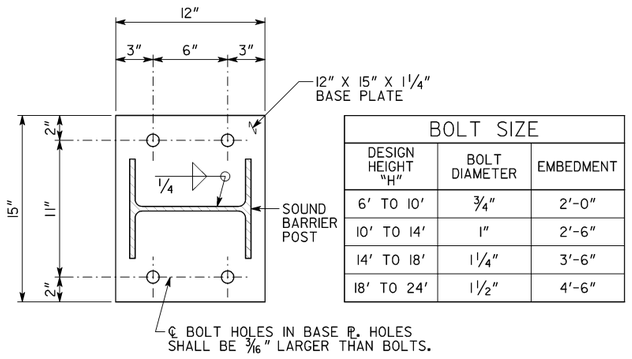

BOLT SIZE		
DESIGN HEIGHT "H"	BOLT DIAMETER	EMBEDMENT
6' TO 10'	¾"	2'-0"
10' TO 14'	1"	2'-6"
14' TO 18'	1¼"	3'-6"
18' TO 24'	1½"	4'-6"

SECTION C - C
SCALE: 2" = 1'-0"

⚠1

DETAILS FOR WALL MOUNTED SOUND BARRIER

10 FOOT POST SPACING

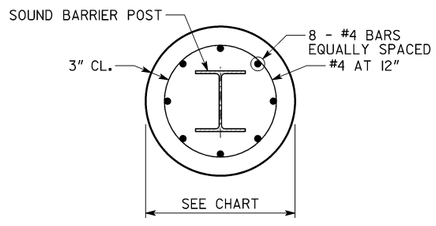

⚠ TYPICAL POST BASE DETAIL

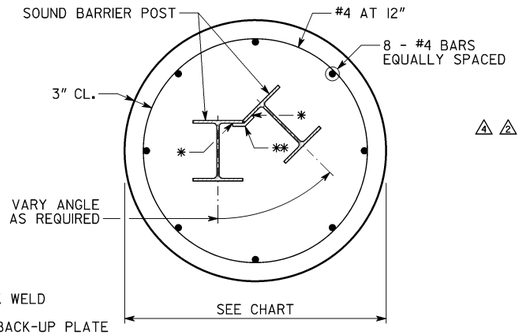

CORNER POST BASE DETAIL

DETAILS FOR GROUND MOUNTED SOUND BARRIER

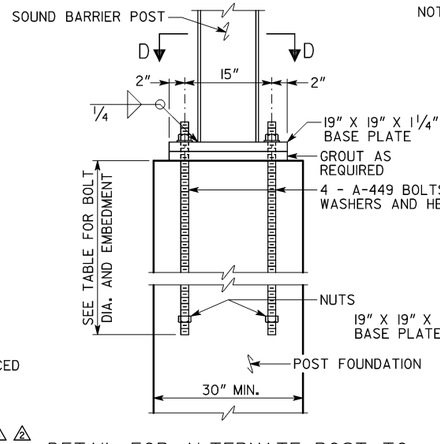

⚠4 ⚠2 DETAIL FOR ALTERNATE POST TO FOUNDATION CONNECTION DETAIL

10, 15 AND 20 FOOT POST SPACING

NOTE: POST AND BASE PLATE SHALL BE GALVANIZED AFTER ALL FABRICATION IS COMPLETE.

THIS DETAIL DOES NOT APPLY FOR SOUND BARRIERS OVER 24'-0" HIGH.

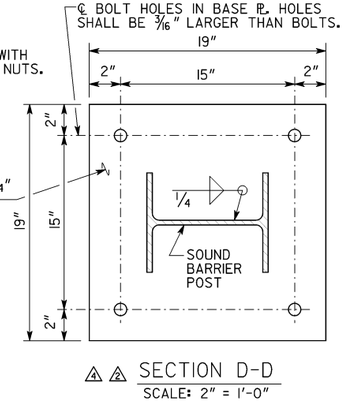

⚠4 ⚠2 SECTION D-D
SCALE: 2" = 1'-0"

⚠2 POST BOLTED TO DRILLED SHAFT		
HEIGHT	BOLT Ø	EMBED
6' TO 12'	¾"	2'-0"
12' TO 16'	1"	3'-0"
16' TO 20'	1¼"	4'-6'
20' TO 24'	1½"	6'-0"

BY	REVISIONS	DATE
DLC	REVD. TABLE AND NOTE	02-24-05
SWW	REVD. TABLES AND DETAILS	01-08-08
SWW	REVISED PANEL SUPPORT PLATE	08-17-08
SWW	REVISED PLATE DETAILS	03-23-11
SWW	REVISED TABLE AND DETAIL	11-16-11
SWW	REMOVED ADHESIVE ANCHOR	01-10-12
DPD	REMOVED DET. AND NOTE, REV'D. NOTE	04-22-15

DEPARTMENT OF TRANSPORTATION
STATE OF GEORGIA

CONSTRUCTION DETAIL 2 OF 2
SOUND BARRIER FOUNDATION AND POST DETAILS

SCALE ⅜" = 1'-0" (UNLESS NOTED) MAY 2004

DESIGNED JPT/DLC
DRAWN DLC
CHECKED SWW
DESIGN GROUP DPD

REVIEWED JPT/MCD
APPROVED PVL

NUMBER N-01B
PAGE 2 OF 2

STATE	PROJECT NUMBER	SHEET NO.	TOTAL SHEETS
GA.			

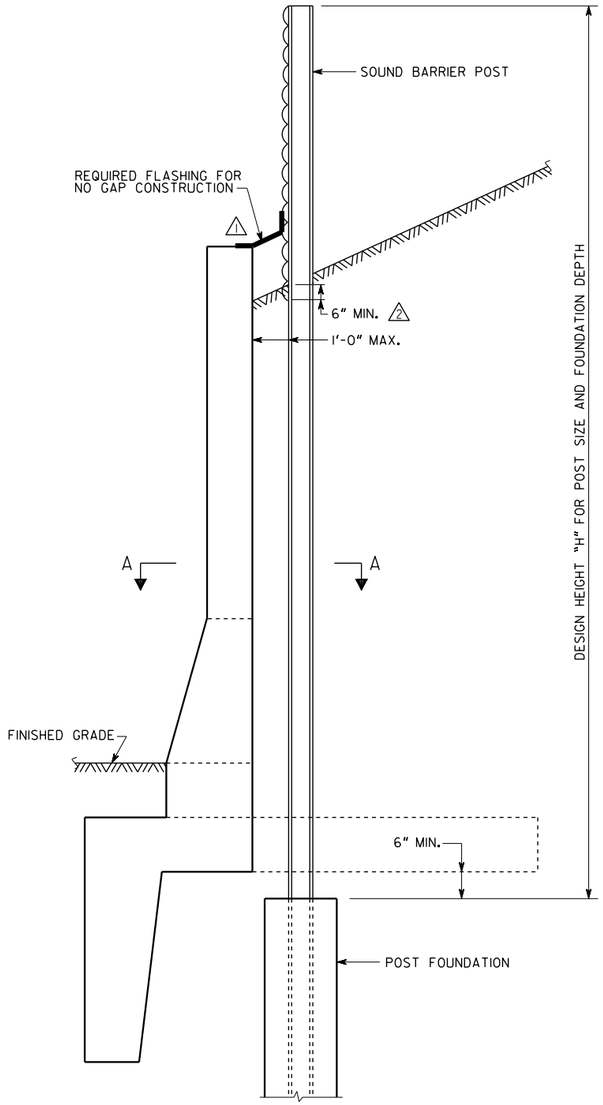

DETAIL FOR GROUND MOUNTED
SOUND BARRIER
(FOR USE WITH TYPE 6 SERIES CONCRETE SIDE BARRIER)
1

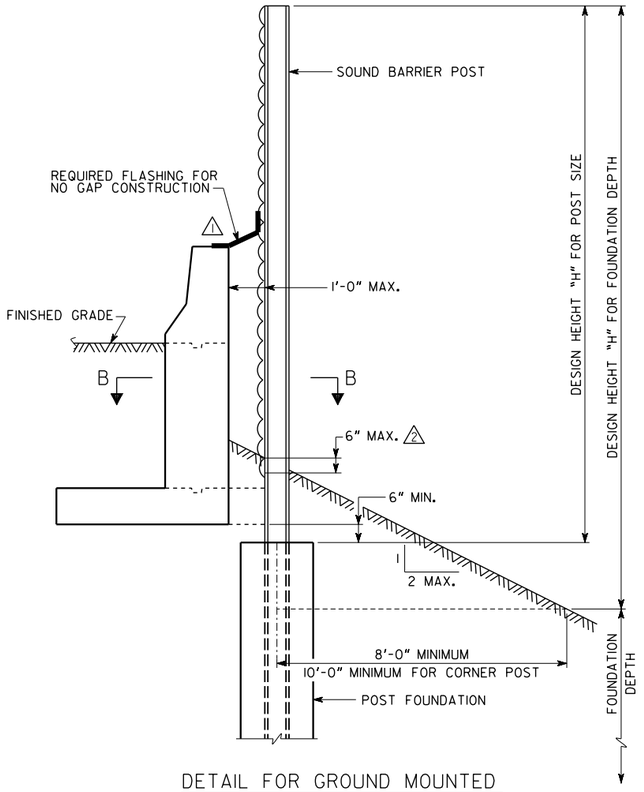

DETAIL FOR GROUND MOUNTED
SOUND BARRIER
(FOR USE WITH TYPE 2 SERIES CONCRETE SIDE BARRIER)
1

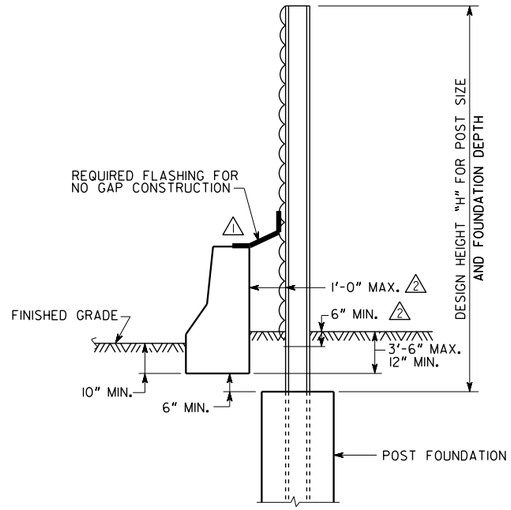

DETAIL FOR GROUND MOUNTED
SOUND BARRIER
(FOR USE WITH TYPE 7R CONCRETE SIDE BARRIER)

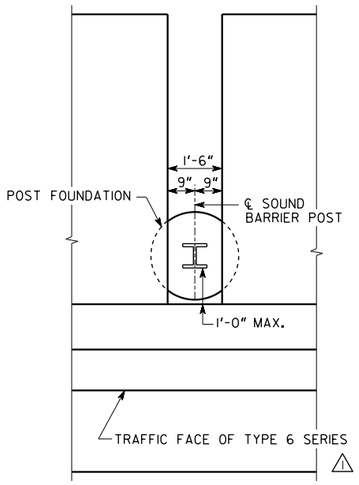

SECTION A-A

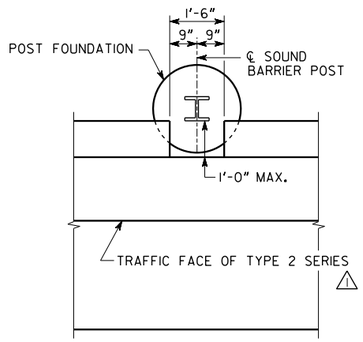

SECTION B-B

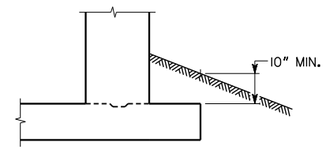

FOOTING DETAIL FOR SIDE BARRIER
(FOR USE WITH TYPE 2 SERIES CONCRETE SIDE BARRIER)
1

NOTE:
CONSTRUCTION OR EXPANSION JOINTS IN THE TYPE 2 SERIES AND TYPE 6 SERIES BARRIER SHALL BE LOCATED A MINIMUM OF 3'-0" FROM A BLOCK-OUT.

2 DRAINAGE DETAILS SHALL BE PROVIDED FOR PANELS BEHIND SIDE BARRIERS. SEE CONSTRUCTION DETAIL D-49 AND ROADWAY PLANS.

DATE	REVISION	BY
8-14-15	REV'D PANEL EMBEDMENT	DPD
4-22-15	REV'D. FLASHING, SERIES	DPD

DEPARTMENT OF TRANSPORTATION
STATE OF GEORGIA

CONSTRUCTION DETAIL
SOUND BARRIER DETAILS AT CONCRETE SIDE BARRIERS

SCALE 1/2"=1'-0"(UNLESS NOTED) MAY, 2004

DESIGNED JPT/DLC
DRAWN WMC
CHECKED SWW
DESIGN GROUP DPD

REVIEWED JPT/MCD
APPROVED PVL

NUMBER
N-02

STATE	PROJECT NUMBER	SHEET NO.	TOTAL SHEETS
GA.			

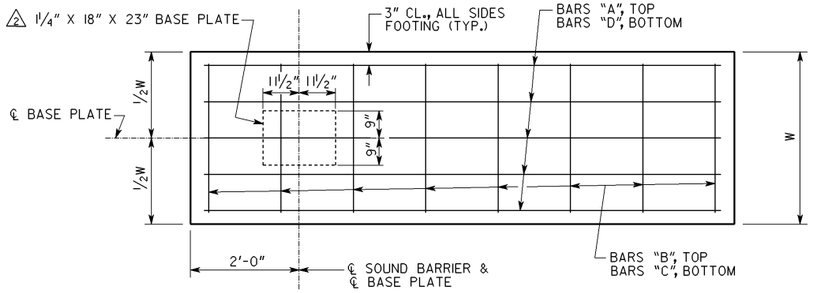

PLAN

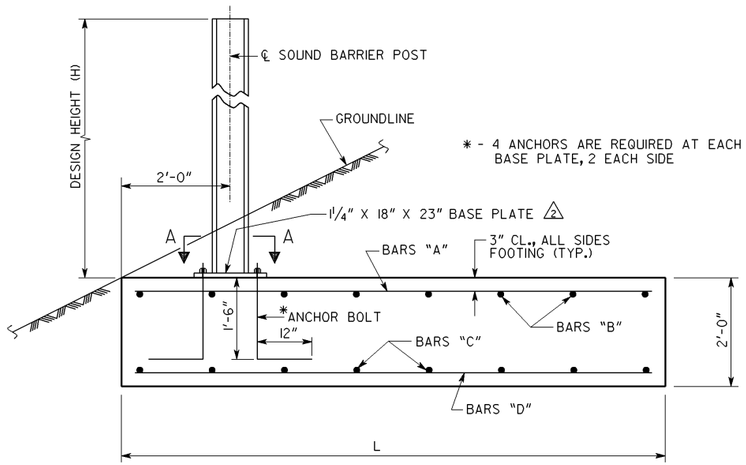

ELEVATION

* - 4 ANCHORS ARE REQUIRED AT EACH BASE PLATE, 2 EACH SIDE

NOTES

1. SPREAD FOOTING ALTERNATE SHALL BE USED ONLY WHEN THE DRILLED SHAFT FOUNDATION IS NOT FEASIBLE DUE TO SHALLOW ROCK.
2. SPREAD FOOTINGS ARE DESIGNED FOR AN ALLOWABLE SOIL BEARING CAPACITY OF 1.5 TONS PER SQ. FT.
3. ANCHOR BOLTS SHALL BE A-449 WITH WASHERS AND HEX NUTS.
4. ALL NUTS, BOLTS, WASHERS, PLATES AND HARDWARE REQUIRED FOR CONSTRUCTING SOUND BARRIERS SHALL BE HOT DIP GALVANIZED IN ACCORDANCE WITH ASTM-153. THREADS FOR NUTS SHALL BE UNC CLASS 2B, THREADS FOR BOLTS AND THREADED RODS SHALL BE UNC CLASS 2A. WASHERS SHALL BE COMPATIBLE WITH NUTS AND BOLTS.
5. COST FOR CONCRETE, REINFORCING, EXCAVATION, BACKFILL, ANCHOR BOLTS AND OTHER MATERIALS NECESSARY FOR INSTALLATION SHALL BE INCLUDED IN PRICE BID FOR SOUND BARRIER WALL.
6. THE POST SIZE SHALL BE AS SHOWN ON THE POST SUMMARY TABLE ON THE STANDARD SOUND BARRIER FOUNDATION AND POST DETAIL SHEET. THE WALL MOUNTED POST SIZE SHALL BE USED.
7. DESIGN DATA: CONCRETE ---------- CLASS A, f'_c = 3000 PSI
   REINFORCEMENT STEEL ----- GRADE 60, f_y = 60000 PSI
△1 8. MAXIMUM POST SPACING ALLOWED IS 10 FEET.

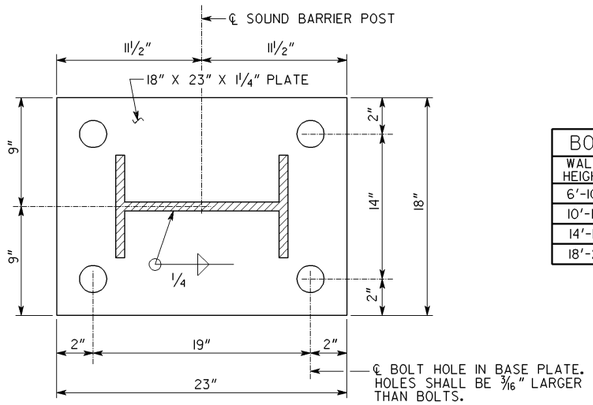

△2 SECTION A-A
NO SCALE

BOLT SIZE	
WALL HEIGHT	BOLT DIAMETER
6'-10'	¾"
10'-14'	1"
14'-18'	1¼"
18'-24'	1½"

** - FOR INFORMATION ONLY

TABLE OF LETTERED BARS AND DIMENSIONS											** QUANTITIES	
DESIGN HEIGHT (H)	L	W	BARS "A"		BARS "B"		BARS "C"		BARS "D"		CONCRETE (CU. YDS.)	REINF. STEEL (LBS.)
			NO. REQ'D.	BAR SIZE	NO. REQ'D.	BAR SIZE	NO. REQ'D.	BAR SIZE	NO. REQ'D.	BAR SIZE		
10'	7'-6"	3'-2"	4	#6	7	#4	7	#4	4	#6	1.8	113
12'	8'-0"	3'-2"	4	#6	7	#4	7	#4	4	#6	1.9	119
14'	9'-0"	3'-2"	4	#6	7	#4	7	#4	4	#6	2.1	131
16'	10'-0"	3'-2"	5	#6	8	#4	8	#4	5	#6	2.4	175
18'	10'-9"	3'-2"	6	#6	8	#4	8	#4	6	#6	2.5	218
20'	11'-0"	3'-8"	8	#6	8	#4	8	#4	8	#6	3.0	292
22'	12'-0"	3'-8"	4	#8	9	#4	9	#4	4	#8	3.3	289
24'	12'-9"	3'-8"	4	#8	9	#4	9	#4	4	#8	3.5	342

△2△1

BY	REVISION	DATE
SWW	REVISED PLATE DIMENSIONS	3-23-09
SWW	ADDED MAX. SPACING NOTE	5-27-04

DEPARTMENT OF TRANSPORTATION
STATE OF GEORGIA

CONSTRUCTION DETAIL

SPREAD FOOTING ALTERNATE FOR SOUND BARRIER WALL

SCALE ¾"=1'-0"(UNLESS NOTED)

DESIGNED JPT/SWW
DRAWN WMC
CHECKED SWW
DESIGN GROUP SWW

REVIEWED JPT/MCD
APPROVED PVL

NUMBER
N-03

STATE	PROJECT NUMBER	SHEET NO.	TOTAL SHEETS
GA.			

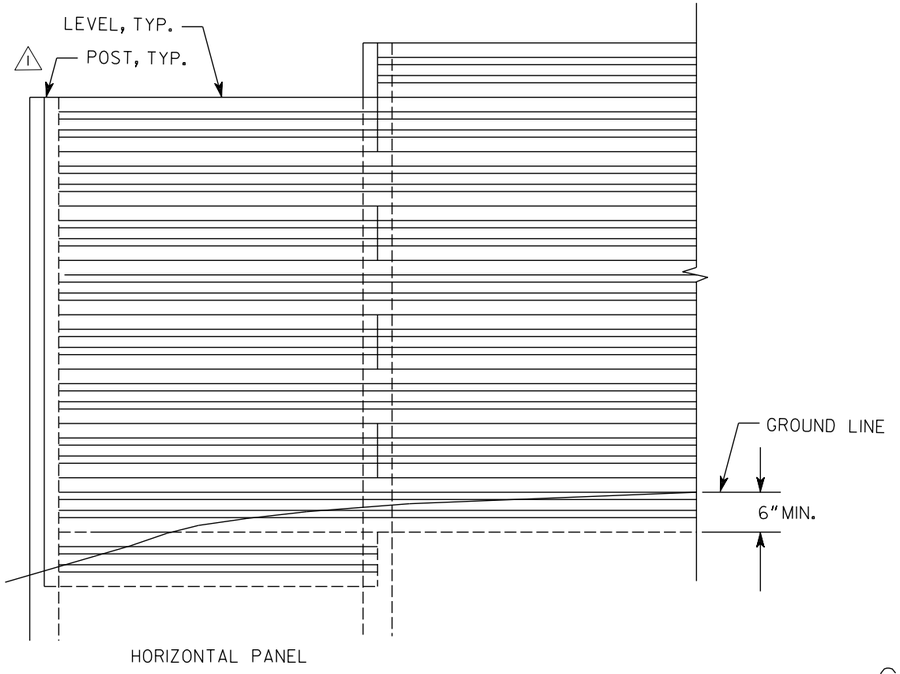

HORIZONTAL PANEL

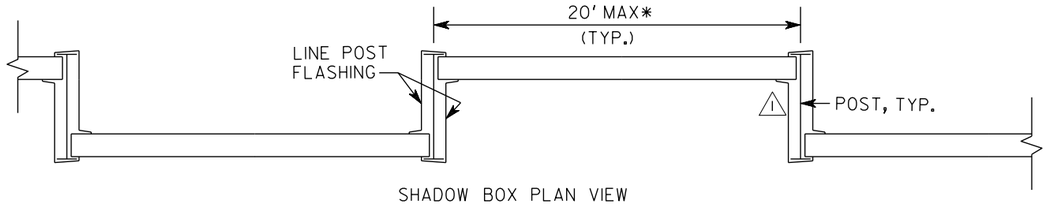

SHADOW BOX PLAN VIEW

1 * SEE SHEET N-1A AND N-1B FOR FOUNDATION AND POST DETAILS.

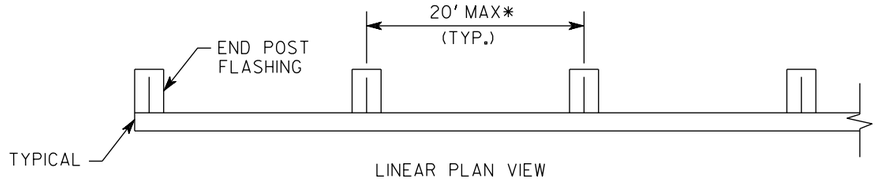

LINEAR PLAN VIEW

GENERAL NOTES:

1. ALL POSTS SHALL BE ENCLOSED WITH FLASHING.

2. THE TOP CAP OF THE WALL SHALL ALSO COVER THE AREA ENCLOSED BY THE POST FLASHING.

3. THE SOUND BARRIER PANELS SHALL BE ABLE TO RESIST A WIND LOAD OF 80 MPH (28 PSF). ADDITIONAL GIRTS, FASTENERS, ETC. SHALL BE SHOWN WHERE NECESSARY IN THE SHOP DRAWINGS, AND SHALL BE INCLUDED IN THE BID PRICE, PER SQUARE FOOT OF SOUND BARRIER.

4. THE WALL PANELS SHALL BE PLACED A MINIMUM OF 6"INTO THE BERM / EXISTING GROUND IF NO SIDE BARRIER PROTECTION DEVICE IS UTILIZED. SEE TYPICAL SECTION.

5. SEE SPECIFICATIONS SECTION 624 FOR ADDITIONAL CONDITIONS.

1 6. STEEL ANGLE SHALL BE PLACED AT THE TOP OF WALLS BETWEEN THE POST FOR PANEL PROTECTION. SEE CONSTRUCTION DETAIL SHEET N-1A FOR DETAILS.

7. THE PANELS, FLASHING, AND ALL EXPOSED SURFACES SHALL HAVE THE FOLLOWING COLOR: 16360 (T-ROCK GREEN) OR EQUIVALENT.

8. SOUND BARRIER PANELS SHALL BE PLACED ON THE ROADWAY SIDE OF THE SUPPORT POSTS WHEN MOUNTED ON BRIDGES.

9. WHERE PANELS BUTT UP AGAINST OTHER PANELS, FLASHING SHALL BE INSTALLED TO ENSURE "AIR TIGHT", NO GAP CONSTRUCTION.

2 10. SEE SHEET N-2 FOR PANEL EMBEDMENT DETAILS WHEN PANELS ARE INSTALLED BEHIND SIDE BARRIERS.

11. ALL SHOP DRAWINGS SHALL BE SUBMITTED FOR REVIEW AND APPROVAL BY THE ENGINEER. SHOP DRAWINGS SHALL INCLUDE ANY SIGN ATTACHMENT AND FLASHING FOR SIGN SUPPORTS.

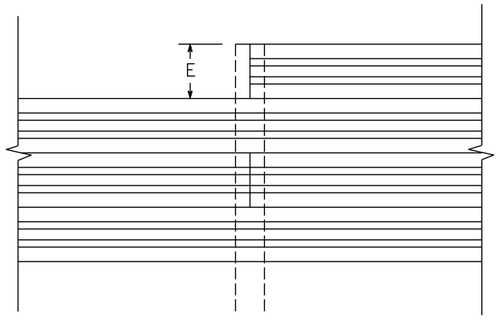

CHANGE IN HEIGHT
(TYPICAL)
E MIN = 1 PANEL WIDTH

BY	REVISION	DATE
DPD	REVISED PANEL EMBEDMENT	8-14-15
DPD	GENERAL REVISIONS	4-22-15

DEPARTMENT OF TRANSPORTATION
STATE OF GEORGIA

CONSTRUCTION DETAIL
SOUND BARRIER
TYPE B
INTERLOCKING STEEL PANELS

NO SCALE — JUNE 17, 2004

NUMBER
N-04

STATE	PROJECT NUMBER	SHEET NO.	TOTAL SHEETS
GA.			

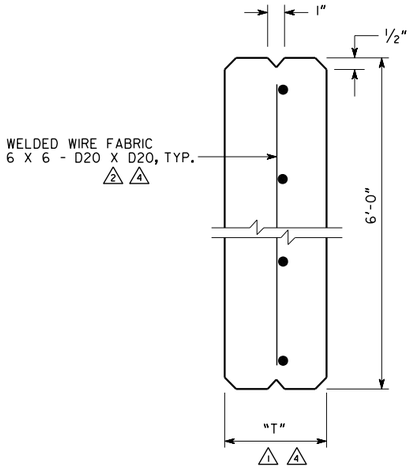

TYPICAL SECTION THRU SOUND BARRIER PANEL

(PRECAST CONCRETE PANEL)

4 "T" = 4" UP TO 10'-0" PILE SPACING
5" UP TO 15'-0" PILE SPACING
6" UP TO 20'-0" PILE SPACING

4 GENERAL NOTES

1. PANELS MAY BE TRANSPORTED VERTICALLY OR HORIZONTALLY. IF TRANSPORTED HORIZONTALLY EACH PANEL MUST BE SUPPORTED AT ITS 1/4 POINTS AT ALL TIMES. ONCE VERTICAL THE PANELS REQUIRE NO ADDITIONAL SUPPORT.
2. IF TEMPORARY #4 LIFTING HOOKS ARE USED, THEY SHALL BE PLACED AT 1/4 POINTS VERTICALLY. LIFTING HOOKS SHALL BE BURNED OFF AND PANEL REPAIRED WITH EPOXY GROUT AFTER INSTALLATION.
3. SEE SPECIFICATIONS AND SPECIAL PROVISIONS FOR ADDITIONAL INFORMATION.
3 4. CONCRETE PANELS WILL HAVE SURFACE FINISH AND A GRAFFITI PROTECTION SYSTEM ACCORDING TO THE GEORGIA STANDARD SPECIFICATIONS SECTION 624, CURRENT EDITION AND SUPPLEMENTS THERETO.
5. FABRICATOR RESPONSIBLE FOR ANY ADDITIONAL REINFORCEMENT NECESSARY FOR STORAGE, SHIPPING AND HANDLING.
6. PILES, VERTICAL AND HORIZONTAL SUPPORT PLATES AND WALL PANEL CLIPS SHALL BE GALVANIZED AFTER ALL FABRICATION IS COMPLETE.
5 7. SEE SHEET N-2 FOR PANEL EMBEDMENT DETAILS WHEN PANELS ARE INSTALLED BEHIND SIDE BARRIERS. WALL PANELS SHALL BE PLACED A MINIMUM OF 6" INTO THE BERM / EXISTING GROUND IF NO SIDE BARRIER PROTECTION DEVICE IS UTILIZED.

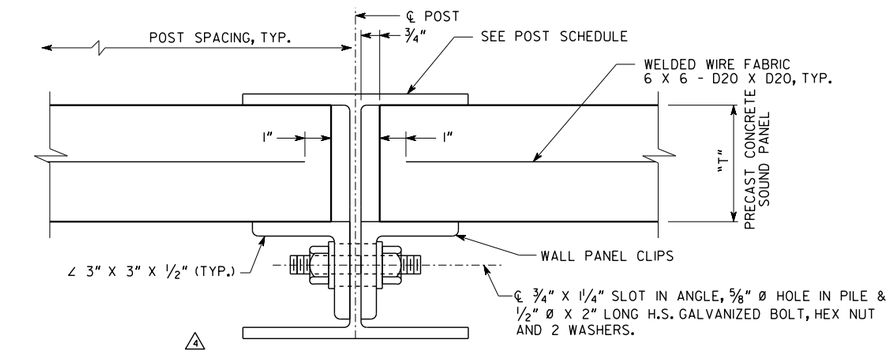

TYPICAL CONNECTION AT POST

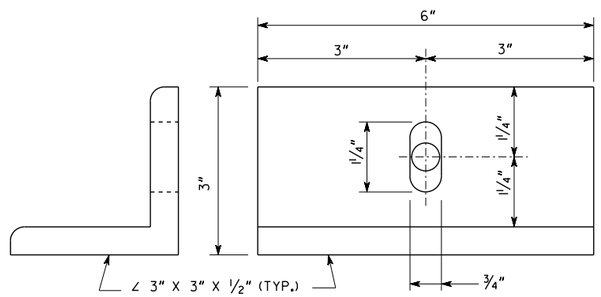

4 WALL PANEL CLIP DETAIL

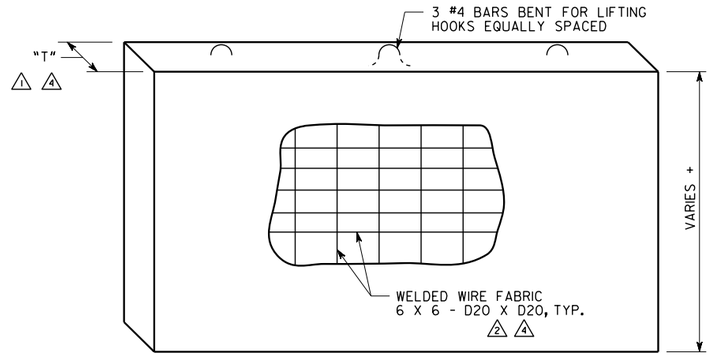

TYPICAL TOP SOUND BARRIER PANEL

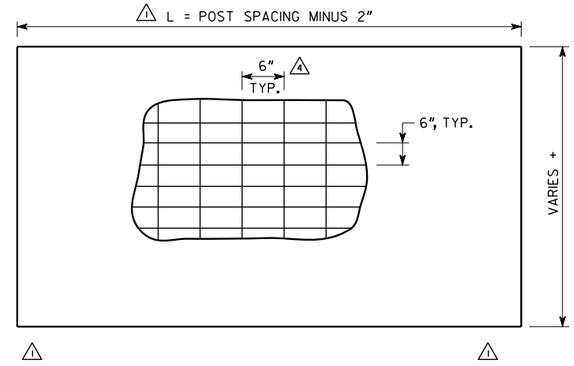

TYPICAL BOTTOM SOUND BARRIER PANEL

(+ PANEL HEIGHTS IN 2'-0" INCREMENTS WITH A MAXIMUM OF 6'-0")

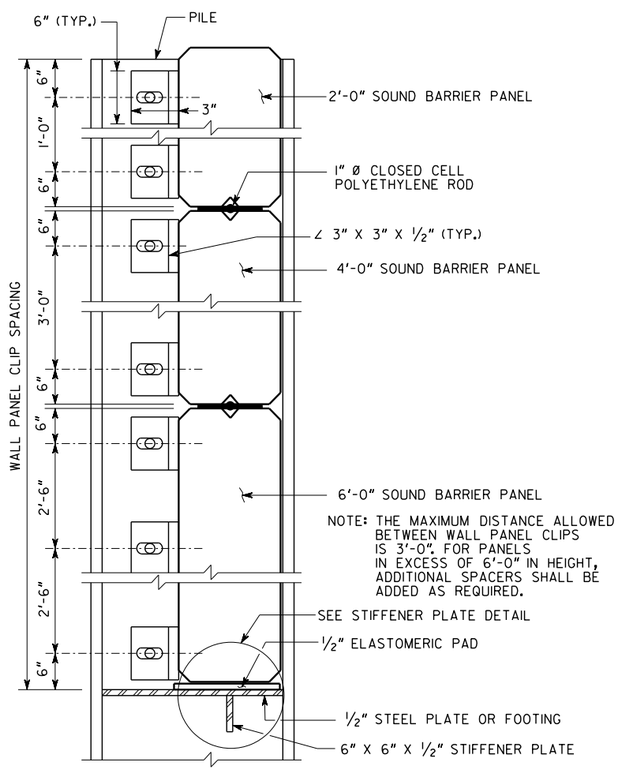

4 TYPICAL CONNECTION JOINT HORIZ.
(FOR ALL PANELS)

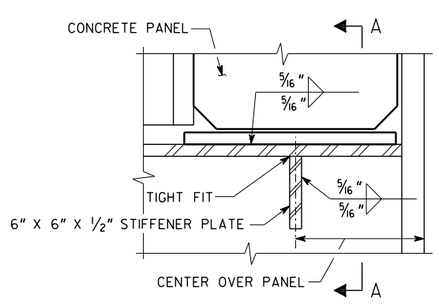

4 DETAIL FOR STIFFENER PLATE

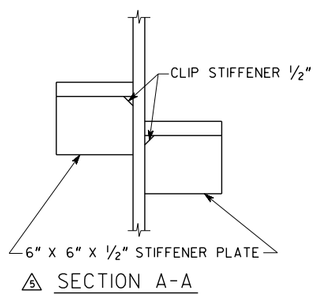

5 SECTION A-A

BY	REVISIONS	DATE
SWW	REVISED DETAILS	08-11-08
SWW	REVISED WELDED WIRE FABRIC	02-26-13
SWW	REVISED NOTE	07-30-13
DPD	REVISED AND ADDED DETAILS	04-22-15
DPD	REVISED PANEL EMBEDMENT AND STEEL SUPPORT DETAIL	08-14-15

DEPARTMENT OF TRANSPORTATION
STATE OF GEORGIA

CONSTRUCTION DETAIL SOUND BARRIER TYPE C PRECAST CONCRETE PANELS

NO SCALE — FEBRUAURY 2008

NUMBER N-05

STATE	PROJECT NUMBER	SHEET NO.	TOTAL SHEETS
GA.			

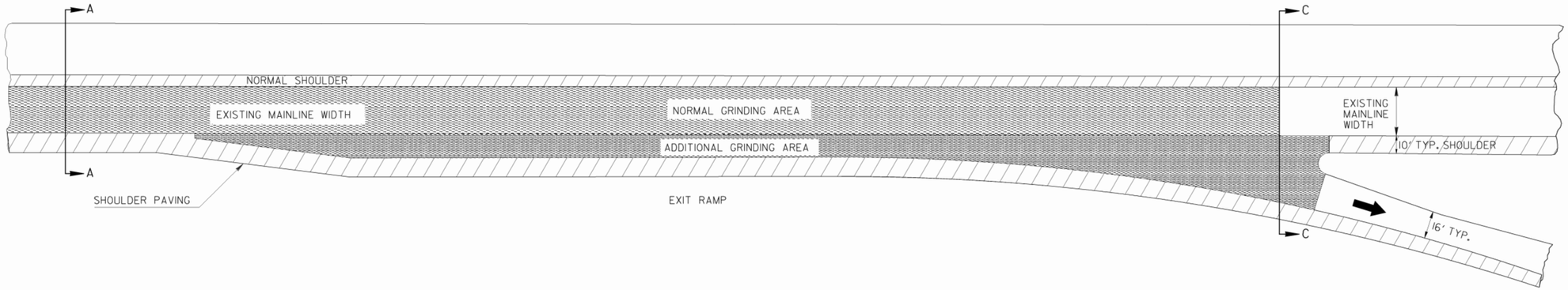

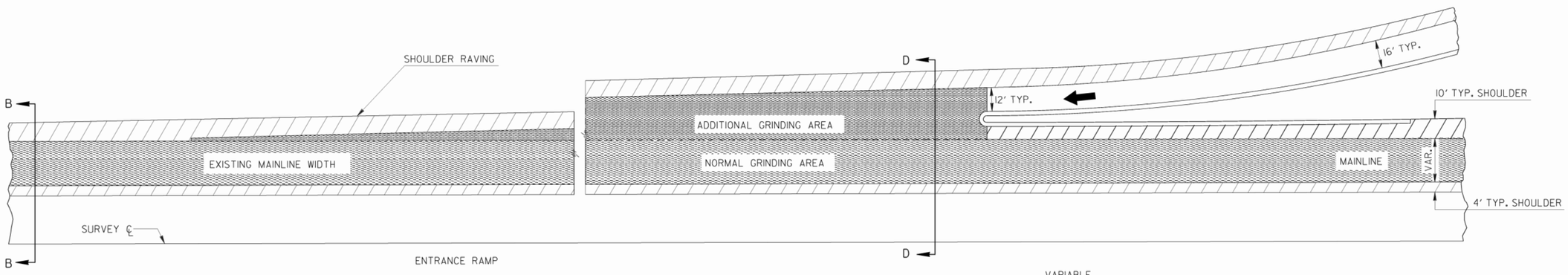

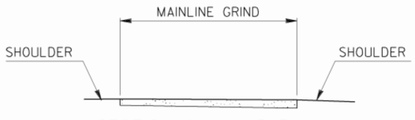

SECTION A-A + B-B
NORMAL ROADWAY SECTION

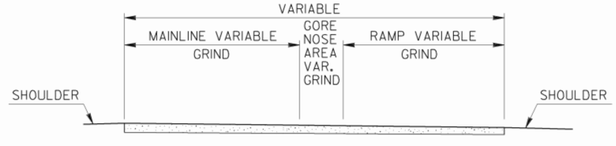

SECTIONS C & D

GENERAL NOTES:

1. WHERE THE CONCRETE PAVEMENT HAS BEEN RESURFACED WITH ASPHALTIC CONCRETE GRINDING WILL NOT BE REQUIRED.

2. GRINDING OF MAINLINE BRIDGES WILL NOT BE ALLOWED, GRINDING WILL TRANSITION TO ZERO AS REQUIRED TO PROVIDE A SMOOTH RIDING SURFACE. TRANSITIONING MAY BE DONE ON BRIDGE APPROACH SLABS.

3. GRINDING WILL OVERLAP A SUFFICIENT DISTANCE ON CONCRETE SHOULDERS TO MAINTAIN POSITIVE DRAINAGE AWAY FROM ROADWAY. COST TO BE INCLUDED IN 'GRIND CONCRETE PAVEMENT. OVERLAP WILL NOT BE MEASURED FOR PAYMENT.

DEPARTMENT OF TRANSPORTATION
STATE OF GEORGIA

CONSTRUCTION DETAILS

DETAILS FOR GRINDING PAVEMENT

SEPT. 1996

NUMBER P-01

DATE | REVISION | BY

STATE	PROJECT NUMBER	SHEET NO.	TOTAL SHEETS
GA.			

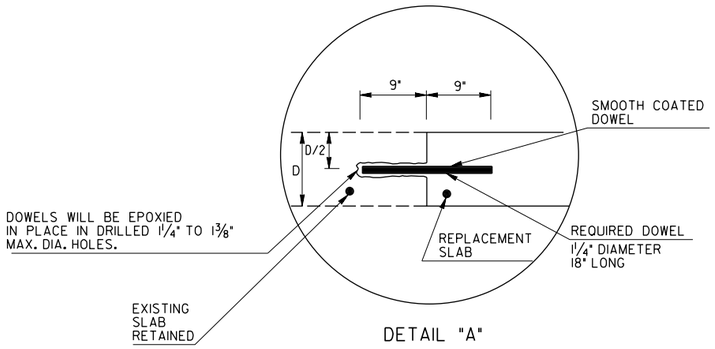

DETAIL "A"
"FREE JOINT"

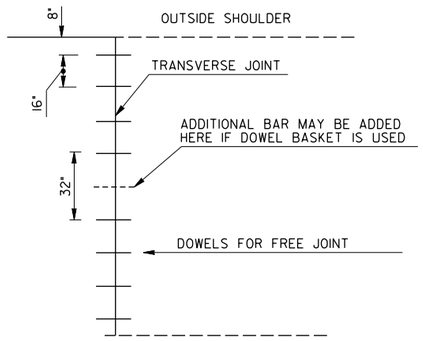

DETAIL "B"
DOWEL BAR SPACING FOR JOINTS

GUIDELINES FOR SELECTING SLAB REPLACEMENT LENGTHS

1. EXISTING SLABS TO BE RETAINED MUST HAVE A MINIMUM LENGTH OF 10 FT.
2. MINIMUM LENGTH OF A REPLACEMENT SLAB IS 6 FEET & MINIMUM WIDTH IS BETWEEN EXISTING LONGITUDINAL JOINTS OR BETWEEN A LONGITUDINAL JOINT AND PAVEMENT EDGE.
3. A JOINT SHALL BE REESTABLISHED AT THE ORIGINAL TRANSVERSE JOINT LOCATION.
4. AN INTERMEDIATE TRANSVERSE JOINT SHALL BE ESTABLISHED AT MID-LENGTH FOR FULL LENGTH SLAB REPLACEMENT 20 FEET OR MORE, NOT TO EXCEED 15 FEET TRANSVERSE JOINTS. (SEE GENERAL NOTE 2).
5. FOR PAVEMENTS WITH SKEWED JOINTS, THE REESTABLISHED JOINTS MUST BE PERPENDICULAR TO THE LONGITUDINAL JOINTS.
6. ALL REESTABLISHED LONGITUDINAL JOINTS WILL BE BUTT JOINTS WITH NO DOWELS OR REINFORCING BARS. ALL TRANSVERSE JOINTS SHALL HAVE DOWELS IN ACCORDANCE WITH THE PLAN DETAILS.
7. SPACING BETWEEN LONGITUDINAL JOINTS SHALL NOT EXCEED 14 FEET.

GENERAL NOTES:

1. THE ENGINEER SHALL DETERMINE WHICH SLABS TO REMOVE AND REPLACE AND WHETHER TO USE FULL OR PARTIAL SLAB REPLACEMENTS. (PARTIAL SLAB REPLACEMENTS ARE TO BE USED TO THE MAXIMUM EXTENT POSSIBLE). FOR PARTIAL SLAB REPLACEMENTS, THE ENGINEER SHALL DETERMINE THE SMALLEST LIMITS OF REMOVAL NECESSARY TO REPAIR THE FAILED AREA USING THE GUIDELINES FOR SLAB REPLACEMENT.
2. WHERE A TRANSVERSE JOINT IS COMMON TO TWO NEW REPLACEMENT SLABS WHICH ARE PLACED AT THE SAME TIME, THE DOWELS SHALL BE PLACED AT D/2 WHERE D IS THE THICKNESS OF THE NEW REPLACEMENT SLAB (SEE PLAN DETAILS A & B). THE REQUIRED DOWEL BARS SHALL BE SECURED IN PLACE BY APPROVED SUPPORTING ASSEMBLIES CAPABLE OF MAINTAINING DOWELS IN CORRECT POSITION WITH MINIMAL MOVEMENT DURING CONCRETE PLACEMENT. ASSEMBLIES SHALL BE SECURED IN POSITION ON THE SUB-BASE IN AN APPROVED MANNER THAT WILL HOLD THE ASSEMBLY WITHOUT DISRUPTION DURING CONSTRUCTION. DOWEL BARS SHALL BE PLACED TO A VERTICAL AND HORIZONTAL TOLERANCE OF PLUS OR MINUS 1 INCH OF THE PLAN POSITION. DOWEL BAR MISALIGNMENT SHALL NOT EXCEED 3/8 INCH PER FOOT IN A VERTICAL OR OBLIQUE PLANE. WHEN EPOXY COATED DOWELS ARE USED, THE ENTIRE SURFACE SHALL BE UNIFORMLY COATED WITH A THIN FILM OF HEAVY WEATHERPROOFING GREASE. POSITIVE MEANS OF IDENTIFYING DOWEL BAR ASSEMBLY LOCATIONS SHALL BE PROVIDED TO INSURE ACCURATE POSITIONING OF THE SAWED JOINT.
3. AN INITIAL SAW-CUT SHALL BE SAWED (1/8" MINIMUM WIDTH) TO WITHIN 1/2" - 1" OF THE TOP OF THE DOWEL BARS, WITHOUT HITTING THE DOWEL BARS. THE SAWING SHALL COMMENCE AS SOON AS THE CONCRETE HAS CURED SUFFICIENTLY TO PERMIT SAWING WITHOUT SURFACE RAVELING. THE SAWING SHALL CONTINUE, REGARDLESS OF WEATHER CONDITIONS, UNTIL COMPLETED AND BEFORE OPENING TO TRAFFIC.
4. ALL SAWED JOINTS SHALL BE SEALED WITH AN APPROVED SILICONE SEALANT.

BY	REVISION	DATE
HAC	REV C. LINES 1,2,4,5 ADD #7	1-12-21
	REV GEN NOTES 2,3 ADD #4	
	REV HOLE SIZE MAX TO 1 3/8"	8-5-99
	REV. LOCKED JOINT DETAIL	

DEPARTMENT OF TRANSPORTATION
STATE OF GEORGIA

CONSTRUCTION DETAILS

DETAILS AND GUIDELINES FOR FULL DEPTH SLAB REPLACEMENT

K.L.J. SEPT. 1988

DESIGNED ____
DRAWN ____
TRACED ____
CHECKED ____

NUMBER
P-02

STATE	PROJECT NUMBER	SHEET NO.	TOTAL SHEETS
GA.			

DETAILS FOR RESEALING JOINTS:

DETAIL A

(RESEAL TRANSVERSE JOINTS IN PCC PAVEMENT.)
(RESEAL "FREE JOINT" IN SLAB REPLACEMENT.)

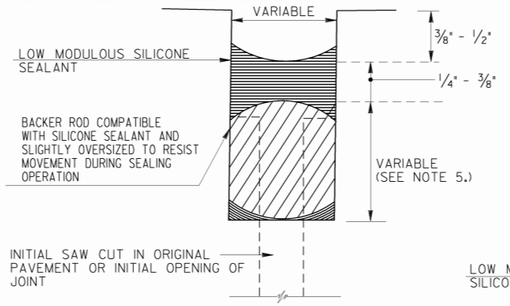

DETAIL B

(SEAL "LOCKED JOINTS" IN SLAB REPLACEMENT.)
(SEAL CRACKS IN PCC PAVEMENT.)
(RESEAL LONGITUDINAL JOINTS IN PCC PAVEMENT.)

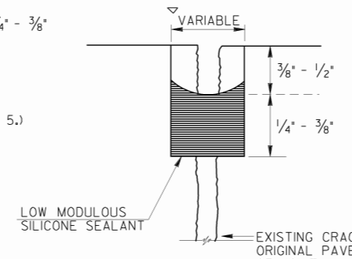

▽USE 1/2 INCH WIDTH FOR CRACKS.

*DETAIL C

(RESEAL JOINTS IN BRIDGE DECKS & APPROACH SLABS)

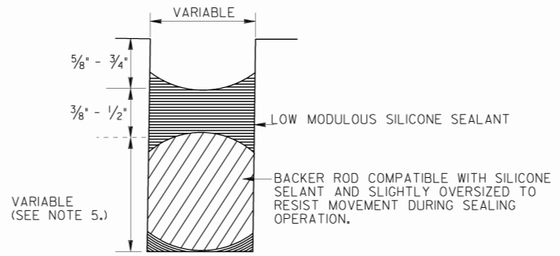

*NON-ARMORED JOINTS WITH ONE SEALANT RECEPTACLE AND ALL CONCRETE SURFACES ON JOINT FACES.

**NOTE: ON JOINTS LARGER THAN 1" IN WIDTH, USE BACK-UP MATERIAL SQUARE OR RECTANGULAR SHAPE CUT FROM APPROVED RESILIENT MATERIAL.

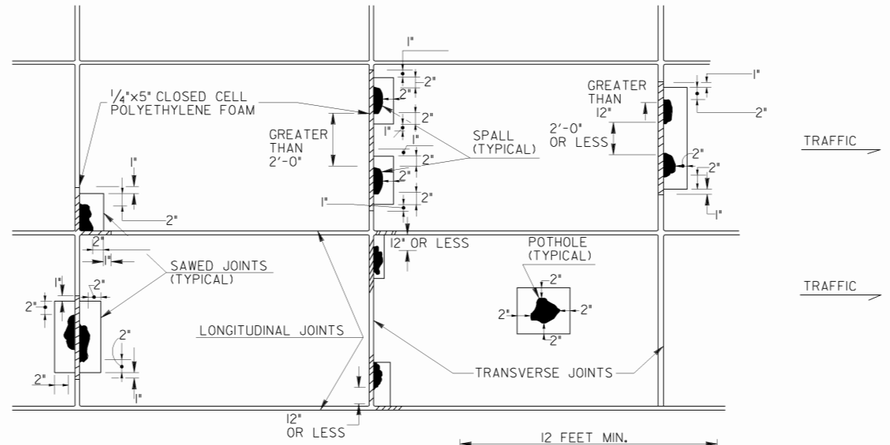

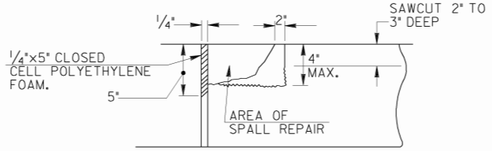

LONGITUDINAL SECTION THROUGH SPALL

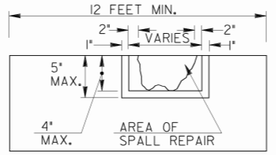

SECTION THROUGH TRANSVERSE JOINT

DEATILS FOR PATCHING PORTLAND CEMENT CONCRETE PAVEMENT

NOTES FOR RESEALING JOINTS:

1. UNLESS OTHERWISE INDICATED ON THE PLANS, IT IS THE INTENTION OF THIS PROJECT TO RESEAL ALL EXISTING PCC PAVEMENT JOINTS. THIS INCLUDES ALL LONGITUDINAL, TRANSVERSE OR SKEWED TRANSVERSE JOINTS ON THE MAINLINE, AUXILIARY LANES, ACCELERATION LANES, DECELERATION LANES, RAMPS, AND SHOULDERS THE ENGINEER SHALL DETERMINE THE EXTENT OF RESEALING REQUIRED FOR EACH JOINT.
2. THE SHOULDERS ON PCC PAVEMENT AND RAMPS ARE NORMALLY ASPHALTIC CONCRETE, BUT CAN BE PCC CONCRETE OR CONCRETE CURB AND GUTTER. UNLESS OTHERWISE INDICATED ON THE PLANS, THE LONGITUDINAL AND TRANSVERSE JOINTS IN PCC CONCRETE SHOULDERS AND CONCRETE AND GUTTER ARE TO BE RESEALED, BUT DO NOT RESEAL JOINT BETWEEN CONCRETE PAVEMENT AND ASPHALT SHOULDERS.
3. ALL EXISTING PAVEMENT CRACKS REMAINING AFTER SLAB REPLACEMENT HAS BEEN COMPLETED ARE ALSO TO BE RESEALED BY ROUTING THE CRACK CLEANING, AND SEALING WITH SILICONE SEALANT. THESE QUANTITIES ARE TO BE IN PAY QUANTITIES FOR PCC PAVEMENT JOINT SEALING.
4. PRIOR TO RESEALING THE EXISTING JOINTS, ALL JOINT SPALL REPAIRS, SLAB REPLACEMENTS, AND GRINDING SPECIFIED BY THE PLANS AND ENGINEER ARE TO BE SATISFACTORILY COMPLETED IN ACCORDANCE WITH APPLICABLE PLAN DETAILS, SPECIAL PROVISIONS, AND SPECIFICATIONS.
5. THE EXISTING DEPTH OF THE JOINT IS VARIABLE AND IS FURTHER AFFECTED BY THE EXISTING WIDTH OF THE JOINT AS THE BACKER ROD IS TO BE OVERSIZED TO FIT INTO THE EXISTING JOINT AND BE COMPRESSED ENOUGH TO RESIST MOVEMENT DURING THE SEALING OPERATION. IF NECESSARY, THE CONCTRACTOR WILL SAW THE JOINT DEEPER TO MAINTAIN THE SPECIFIED RECESS DEPTH AND DEPTH OF SEALANT MATERIAL.
6. IN THE EVENT THE EXISTING JOINTS (TRNASVERSE AND/OR LONGITUDINAL) CONTAIN A "UNITUBE", THE WIDTH AND DEPTH OF CUT FOR RESEALING THESE JOINTS SHALL BE MINIMUM NECESSARY TO COMPLETELY REMOVE THE "UNITUBE" DOWN TO THE BOTTOM OF "N" PORTION. IN THIS EVENT, A BACKER ROD WILL ALSO BE NECESSARY FOR THE LONGITUDINAL JOINT TO MAINTAIN THE SPECIFIED RECESS DEPTH AND DEPTH OF SEALANT MATERIAL.

HOWEVER, IT IS NOT NECESSARY TO REMOVE THE "STEM" OR ROOT" PORTION OF THE "UNITUBE". (SEE SKETCH BELOW.)

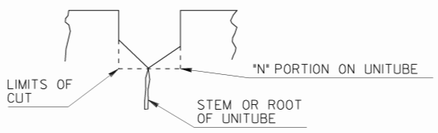

DEPARTMENT OF TRANSPORTATION
STATE OF GEORGIA

CONSTRUCTION DETAILS

RESEALING JOINTS IN PPC CONCRETE PAVEMENT & BRIDGE DECKS
PATCHING PPC CONCRETE PAVEMENT

K.L.J. SEPT. 1988

DATE | REVISION | BY

NUMBER P-03

STATE	PROJECT NUMBER	SHEET NO.	TOTAL SHEETS
GA.			

ASPHALT PAVEMENT - OVERLAY

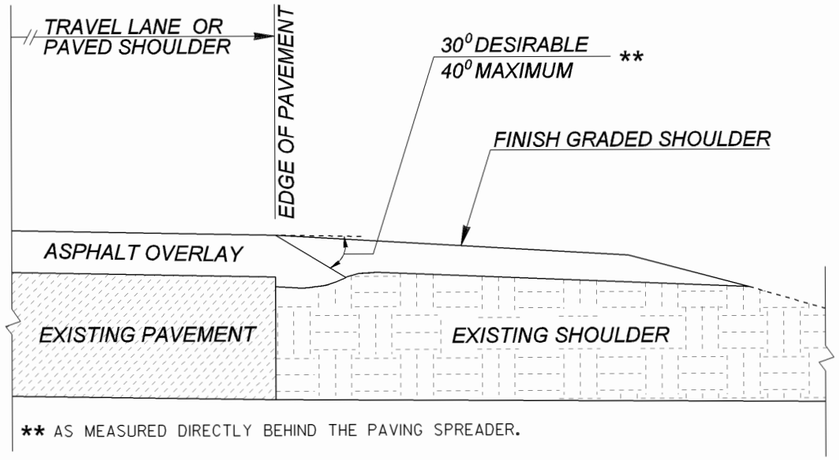

** AS MEASURED DIRECTLY BEHIND THE PAVING SPREADER.

ADDITIONAL QUANTITIES:
DEPTH OF OVERLAY (T), NO RUTTING
$(T)^2$ (IN.) X 0.000441 TN/IN.-FT X LENGTH (FT) = _____TN

DEPTH OF OVERLAY (T), WITH 1 IN. RUTTING
$(T)^2$ (IN.) X 0.000441 TN/IN.-FT X LENGTH (FT) + (T) (IN.) X 0.000882 TN/IN.-FT X LENGTH (FT) = _____TN

PLAIN PC CONCRETE PAVEMENT OR ROLLER COMPACTED CONCRETE PAVEMENT

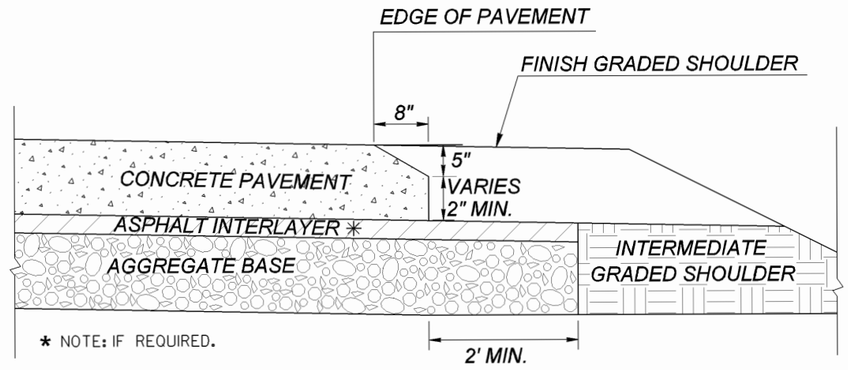

* NOTE: IF REQUIRED.

ADDITIONAL QUANTITIES:
CONCRETE
0.07407 SY/FT X LENGTH (FT) = _____SY

ASPHALT INTERLAYER, IF REQUIRED
(T) IN. X LENGTH (FT) X 0.004074 TN/IN.-FT = _____TN

AGGREGATE BASE (BASED ON 2.07 TN/CY)
(T) IN. X LENGTH (FT) X 0.0042592 TN/IN.-FT = _____TN

ASPHALT PAVEMENT - NEW

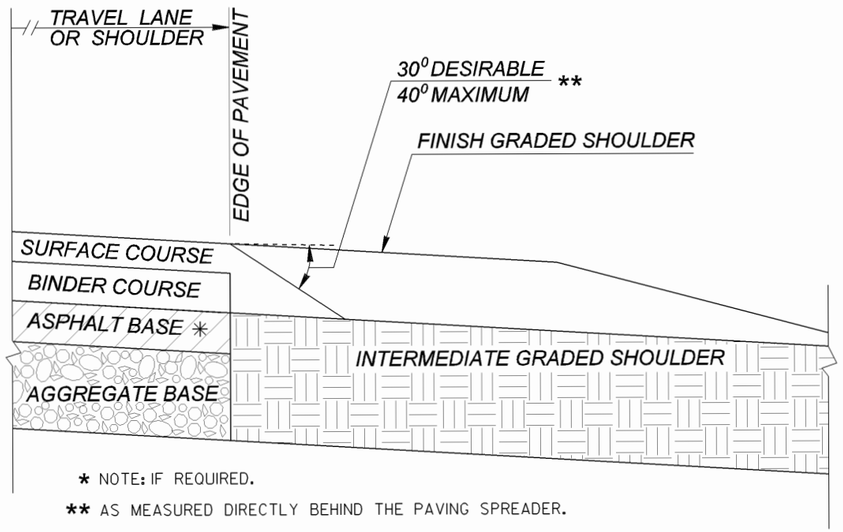

* NOTE: IF REQUIRED.

** AS MEASURED DIRECTLY BEHIND THE PAVING SPREADER.

ADDITIONAL QUANTITIES:
SURFACE COURSE PAVING DEPTH (T)
$(T)^2$ (IN.) X 0.000441 TN/IN.-FT X LENGTH (FT) = _____TN

GENERAL NOTES:
1. THE SAFETY EDGE SHALL BE CONSTRUCTED AS AN INTEGRAL OPERATION OF THE ROADWAY PAVEMENT PLACEMENT PROCESS.

(ASPHALT PAVEMENT)

2. USE AN APPROVED MECHANICAL DEVICE THAT WILL:
   1. APPLY COMPACTIVE EFFORT TO THE ASPHALT MIXTURE TO ELIMINATE OBJECTABLE VOIDS AS THE MIXTURE PASSES THROUGH THE WEDGE DEVICE.
   2. PRODUCE A WEDGE WITH A UNIFORM TEXTURE, SHAPE, AND DENSITY WHILE AUTOMATICALLY ADJUSTING TO VARYING HEIGHTS ENCOUNTERED ALONG THE ROADWAY SHOULDER.

3. A SINGLE-PLATE STRIKE-OFF METHOD SHALL NOT BE USED FOR BITUMINOUS PAVING, AS THE SINGLE-PLATE STRIKE-OFF METHOD HAS BEEN FOUND TO PRODUCE A NON-DURABLE EDGE.

4. COMPACTION OF THE EDGE SHOULD NOT BE DONE WITH THE FIRST PASS OF THE ROLLER: WITH THE ROLLER STAYING OFF THE EDGE AT LEAST 6 INCHES. THIS IS IN ORDER TO ALLOW THE EDGE MIX TO SLIGHTLY COOL PRIOR TO COMPACTION.

5. SHORT SECTIONS OF HANDWORK ARE ALLOWED, WHEN NECESSARY, FOR TRANSITIONS AND TURNOUTS.

CONTINUOUS REINFORCED CONCRETE PAVEMENT

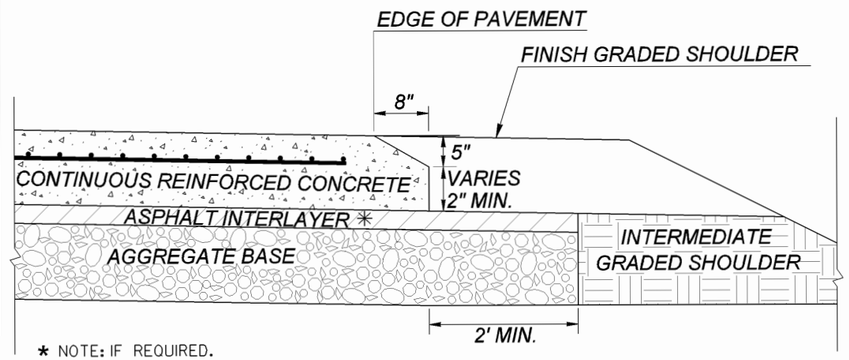

* NOTE: IF REQUIRED.

ADDITIONAL QUANTITIES:
CONCRETE
0.07407 SY/FT X LENGTH (FT) = _____SY

ASPHALT INTERLAYER, IF REQUIRED
(T) IN. X LENGTH (FT) X 0.004074 TN/IN.-FT = _____TN

AGGREGATE BASE (BASED ON 2.07 TN/CY)
(T) IN. X LENGTH (FT) X 0.0042592 TN/IN.-FT = _____TN

DATE	REVISION	BY
11-15-11	REVISED ANGLE TOLERANCE & ADDED NOTE.	TC

DEPARTMENT OF TRANSPORTATION
STATE OF GEORGIA

CONSTRUCTION DETAIL
PAVEMENT EDGE TREATMENT
ASPHALT AND CONCRETE PAVEMENT

NO SCALE — SEPTEMBER 2011

DES. B.A.S.
DRW. G.L.O.
CHK. D.G.P.
REVIEW B.A.S.

NUMBER
P-07

STATE	PROJECT NUMBER	SHEET NO.	TOTAL SHEETS
GA.			

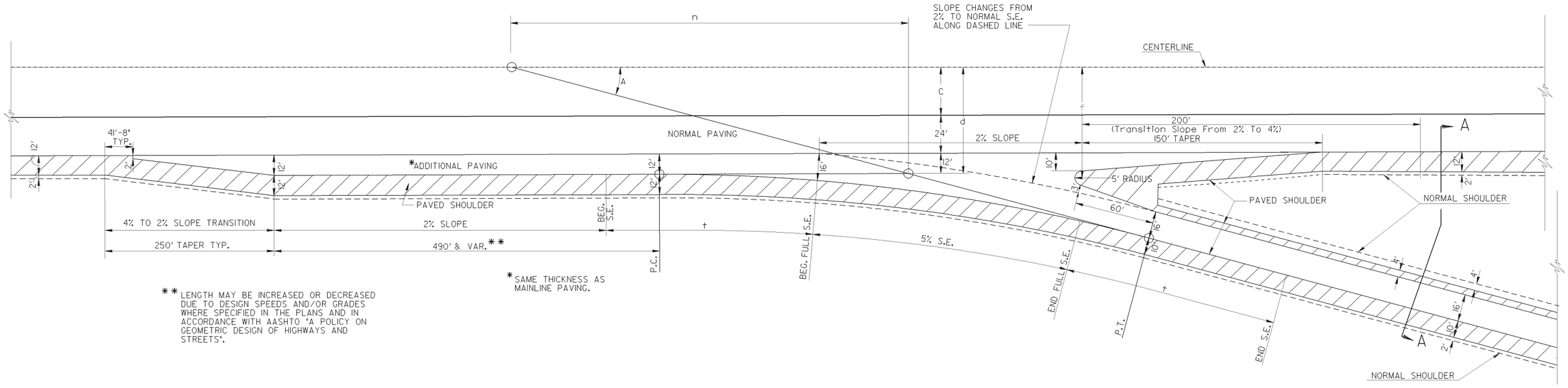

** LENGTH MAY BE INCREASED OR DECREASED DUE TO DESIGN SPEEDS AND/OR GRADES WHERE SPECIFIED IN THE PLANS AND IN ACCORDANCE WITH AASHTO "A POLICY ON GEOMETRIC DESIGN OF HIGHWAYS AND STREETS".

* SAME THICKNESS AS MAINLINE PAVING.

C = ½MEDIAN WIDTH
d = C+24'+12'
f = C+24'+15'
$n = \frac{d}{\text{Tan. A}}$
D = 5°-00' (For Diamond Interchanges)
S.E. = 5%
t = 125'

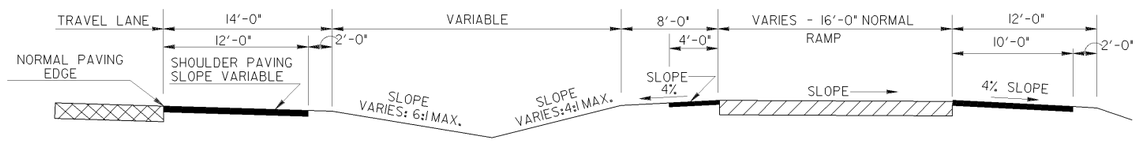

SECTION A-A

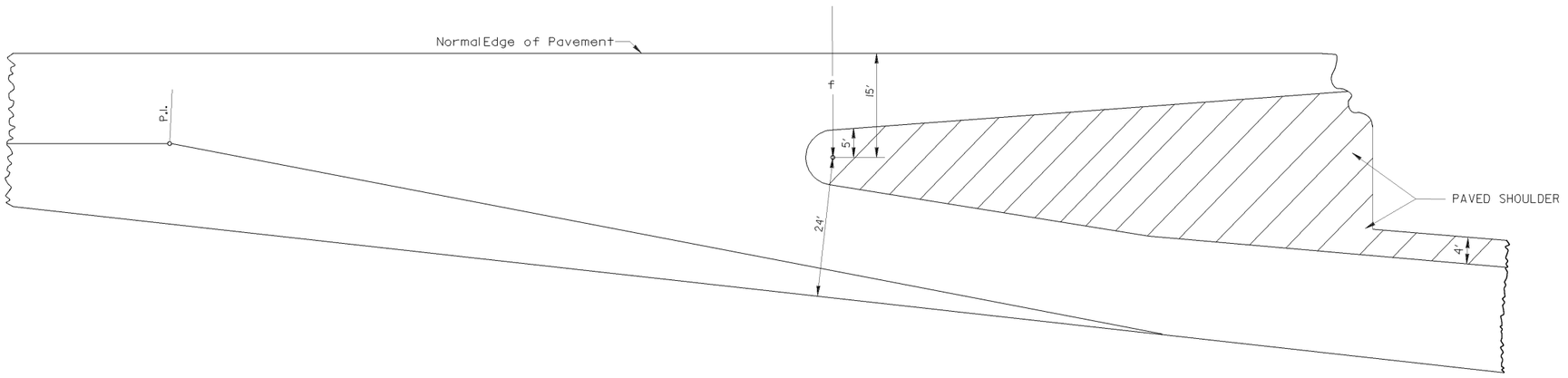

	DATE	DEPARTMENT OF TRANSPORTATION STATE OF GEORGIA	
	REVISION	CONSTRUCTION DETAIL DETAIL OF EXIT RAMPS FOR INTERCHANGES	
		NO SCALE	REDRAWN APRIL 2011
	BY		NUMBER R-01

STATE	PROJECT NUMBER	SHEET NO.	TOTAL SHEETS
GA.			

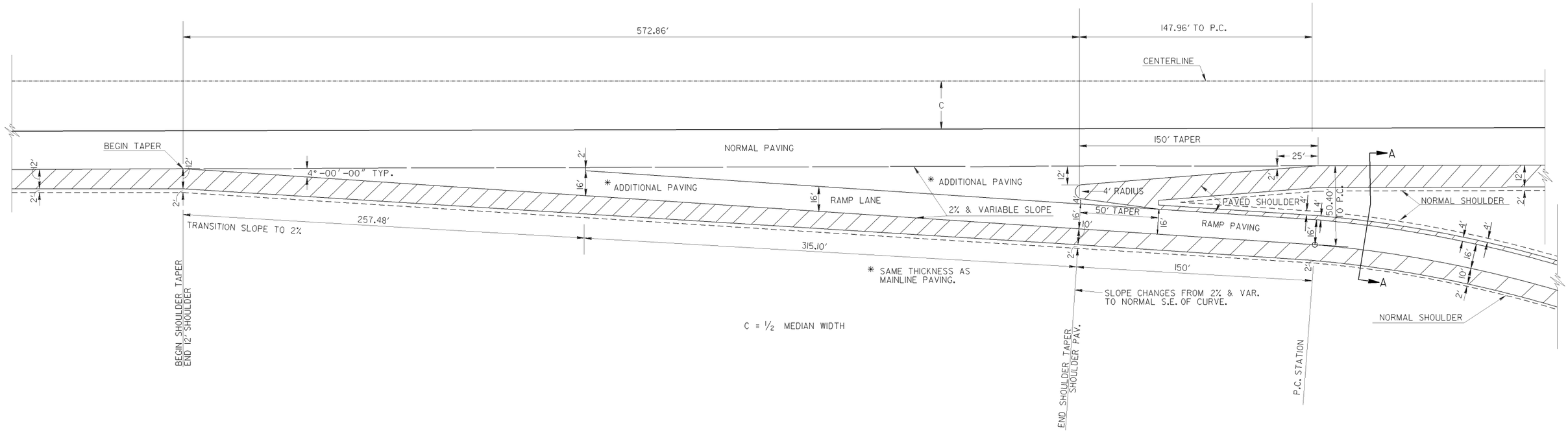

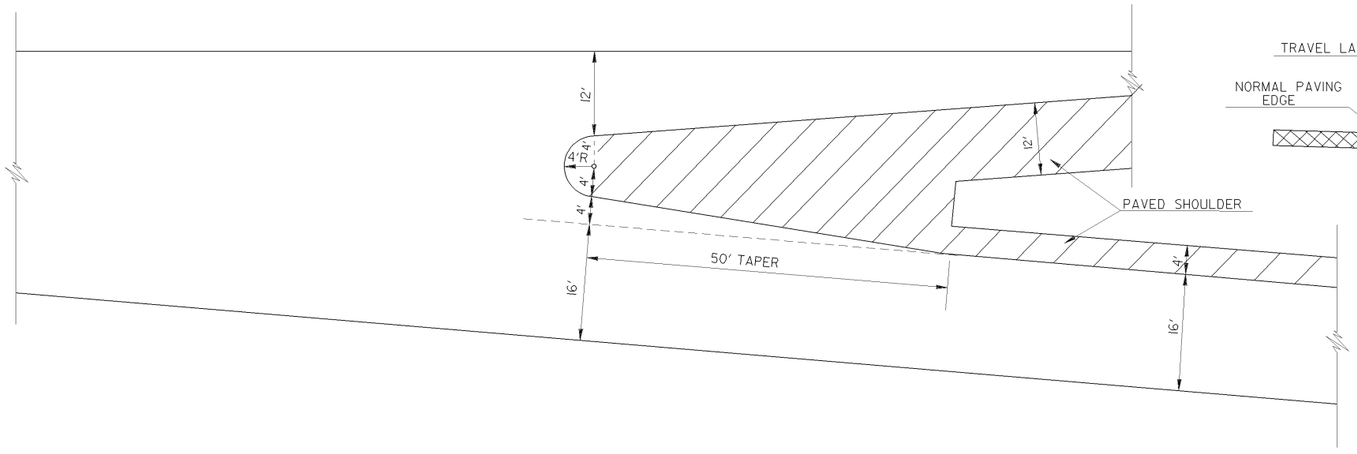

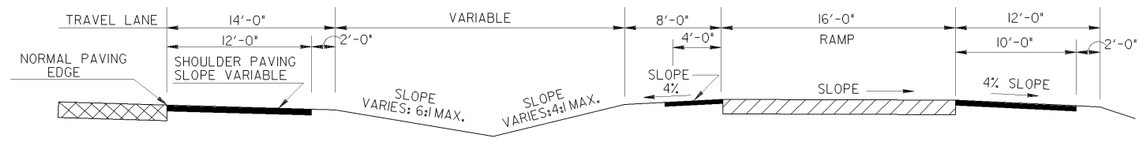

SECTION A-A

DATE	DEPARTMENT OF TRANSPORTATION STATE OF GEORGIA	
REVISION	CONSTRUCTION DETAIL DETAIL OF EXIT RAMPS FOR INTERCHANGES	
	NO SCALE	REDRAWN APRIL 2011
BY		NUMBER R-02

GDOT Georgia Department of Transportation | P. I. No.

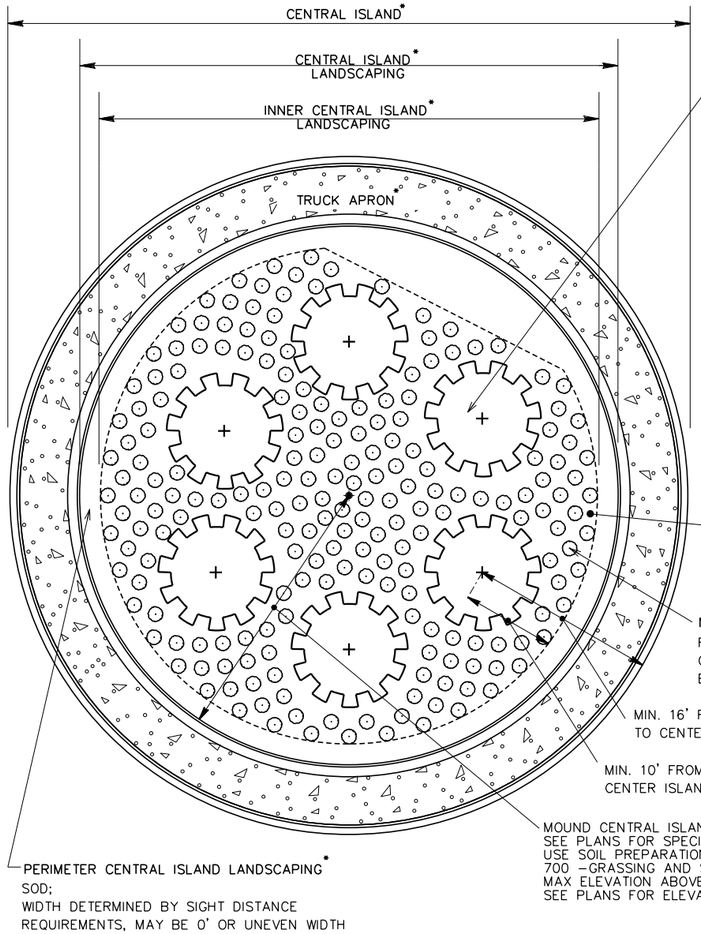

INNER CENTRAL ISLAND DIAMETER (')	TREE SPACING (CENTER TO CENTER)
20-29	1 TREE
30-54	10'
55-69	15'
70-85	20'
>85	25'

*SEE PLANS FOR DIMENSIONS

PLANTING LAYOUT

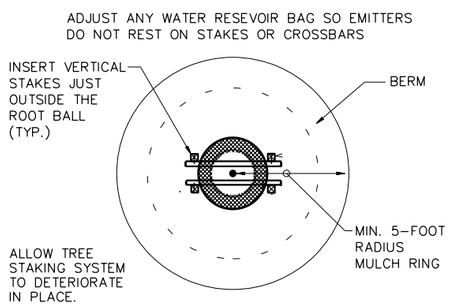

TREE PLANTING DETAIL - PLAN

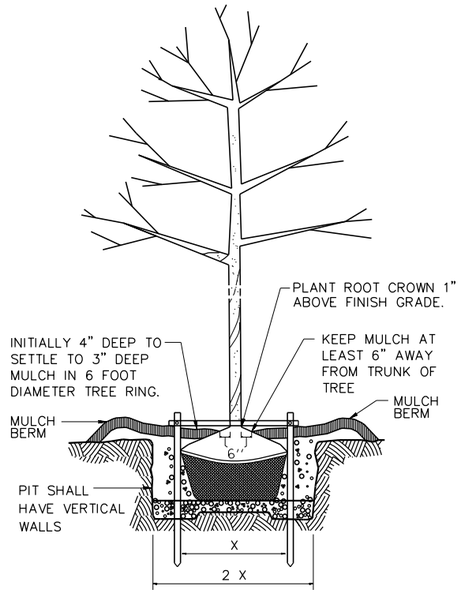

TREE PLANTING DETAIL ELEVATION

USE DRYWALL SCREWS TO ATTACH 4-FOOT LONG VERTICAL 2" X 2" HARDWOOD STAKES TO 2" X 2" CROSSBARS AT LEAST 6 INCHES LONGER THAN THE TREE ROOT BALL DIAMETER TO STABILIZE THE ROOT BALL AND PREVENT THE TREE FROM LEANING.

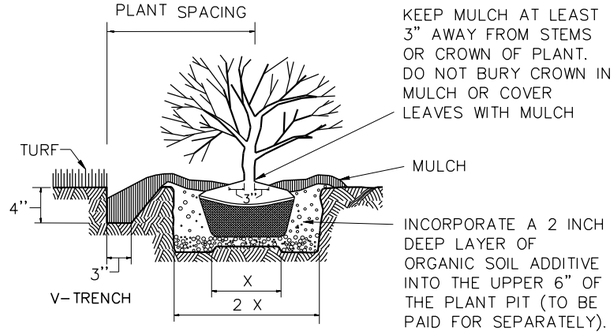

CONTAINER OR BALLED & BURLAPPED PLANTING DETAIL

PLANTING OPTIONS AND BASIS OF PAYMENT:

PAY ITEM #	UNIT	PAY ITEM DESCRIPTION	BOTANICAL NAME	COMMON NAME	SIZE	SPACING
NATIVE EVERGREEN TREES						
	EA					AS SHOWN
702-0707		OSMANTHUS AMERICANUS	CARTREMA AMERICANUS/ OSMANTHUS AMERICANUS	DEVILWOOD/WILD OLIVE	6'-8' MIN. HT	
702-0445		ILEX OPACA (AMERICAN HOLLY)	ILEX OPACA	AMERICAN HOLLY	8'-10' MIN. HT	
702-0471		ILEX VOMITORIA	ILEX VOMITORIA	YAUPON HOLLY	6'-8' MIN. HT	
702-0520		JUNIPERUS VIRGINIANA	JUNIPERUS VIRGINIANA	EASTERN RED CEDAR	8'-10' MIN. HT	
702-0630		MAGNOLIA GRANDIFLORA	MAGNOLIA GRANDIFLORA	SOUTHERN MAGNOLIA	8'-10' MIN. HT	
702-0640		MAGNOLIA VIRGINIANA	MAGNOLIA VIRGINIANA	SWEET BAY MAGNOLIA	8'-10' MIN. HT	
702-0825		PRUNUS CAROLINIANA	PRUNUS CAROLINIANA	CAROLINA CHERRYLAUREL	8'-10' MIN. HT	
NATIVE ORNAMENTAL GRASSES						
	EA				1 GAL OR LANDSCAPE PLUG	AS SHOWN
702-0060		ANDROPOGON TORNARIUS	ANDROPOGON TERNARIUS	SPLIT-BEARD BLUESTEM		
702-0234		BOUETLOUA GRACILIS (BLUE GRAMA)	BOUETLOUA GRACILIS	BLUE GRAMA		
702-0265		ERAGROSTSIS SPECTABILIS	ERAGROSTSIS SPECTABILIS	PURPLE LOVE GRASS		
702-0678		MULLENBERGIA CAPILLARIS	MUHLENBERGIA CAPILLARIS	PINK MUHLY GRASS		
702-0718		PANICUM VIRGATUM 'SHENANDOAH'	PANICUM VIRGATUM 'SHENANDOAH'	RED SWITCHGRASS		
702-0719		PANICUM VIRGATUM	PANICUM VIRGATUM	SWITCHGRASS		
702-1040		SCHIZACHYRIUM SCOPARIUM	SCHIZACHYRIUM SCOPARIUM	LITTLE BLUESTEM		
702-1061		SPORBOLUS HETEROLEPSIS	SPOROBOLUS HETEROLEPSIS	PRAIRIE DROPSEED		
702-1070		TRIPSACUM FLORIDANA	TRIPSACUM FLORIDANA	DWARF FAKAHATCHEE GRASS /EASTERN GAMAGRASS		
NATIVE WILDFLOWERS						
701-0010	AC	WILDFLOWER SEEDING	WILDFLOWERS SEED MIXES	WILDFLOWERS SEED MIXES	-	OVERSEED
OTHER						
700-9300	SY	SOD	CYNODON DACTYLON 'TIFWAY 419' SOD	HYBRID BERMUDA GRASS	-	-
702-9005	LB	SPRING APPLICATION FERTILIZER	SPRING FERTILIZER	FERTILIZER	-	-
702-9025	SY	LANDSCAPE MULCH	-	PINE STRAW MULCH	-	-

GENERAL NOTES:

1. SEE STANDARD SPECIFICATIONS 700 AND 702 FOR PLANTING REQUIREMENTS.
2. SEE PLAN SHEETS FOR THE CENTRAL ISLAND DIMENSIONS, CENTRAL ISLAND GRADES AND ELEVATIONS.
3. TREE, ORNAMENTAL GRASS AND WILD FLOWER SPECIES SHOULD BE CHOSEN FROM THE LIST BASED ON WHAT WILL THRIVE AND "FIT" BEST IN THE AREA.
4. IT IS RECOMMENDED THAT UP TO 3 DIFFERENT TYPES OF ORNAMENTAL GRASSES AND WILDFLOWER BE SELECTED FOR A LOCATION, AND SPREAD EVENLY AROUND THE CIRCLE.
5. THE DESIGNER MAY SPECIFY ALTERNATE PLANT MATERIALS, SUCH AS HIGHER MAINTENANCE PLANTINGS, WITH PRIOR REVIEW AND APPROVAL BY THE OFFICE OF MAINTENANCE. IF ALTERNATE MATERIALS/PLANTINGS ARE SPECIFIED, THEY WILL BE DESCRIBED ELSEWHERE IN THE PLANS.
6. MISCANTHUS AND ALL OTHER INVASIVE EXOTIC PEST PLANT SPECIES ARE NOT ALLOWED TO BE PLANTED ON THE RIGHT OF WAY.

ACP	BY	REVISION	DATE
		CENTRAL ISLAND & PLANTING DETAILS	09-2022
		PLANTING OPTIONS, G.N. 1-4 REV.	
		NEW G.N. 6	

DEPARTMENT OF TRANSPORTATION
STATE OF GEORGIA

CONSTRUCTION DETAIL

ROUNDABOUT LOW MAINTENANCE LANDSCAPING DETAILS

REV. & REDRAWN SEPTEMBER 2022
NO SCALE

NUMBER RA-01

GDOT Georgia Department of Transportation | P. I. No.

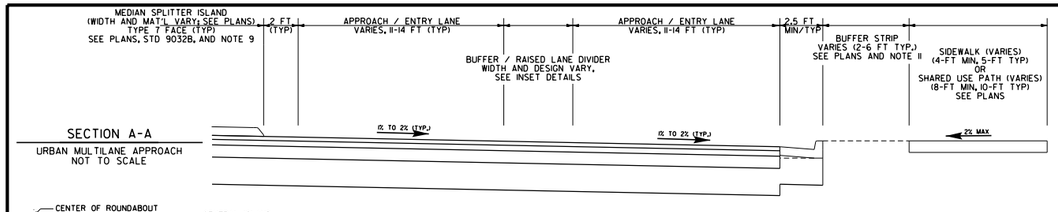

SECTION A-A
URBAN MULTILANE APPROACH
NOT TO SCALE

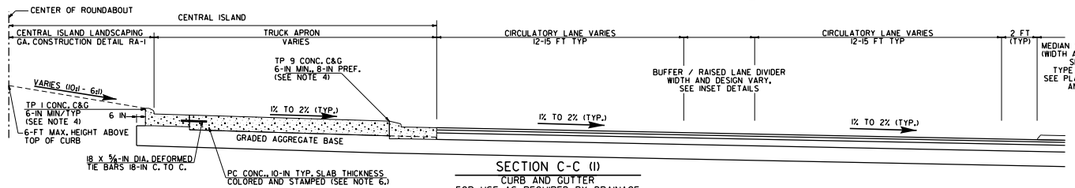

SECTION C-C (1)
CURB AND GUTTER
FOR USE AS REQUIRED BY DRAINAGE
NOT TO SCALE

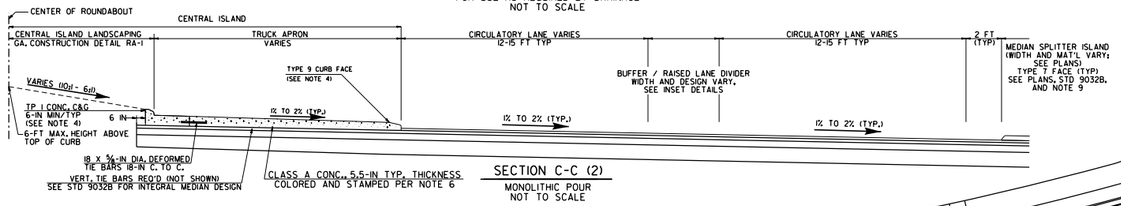

SECTION C-C (2)
MONOLITHIC POUR
NOT TO SCALE

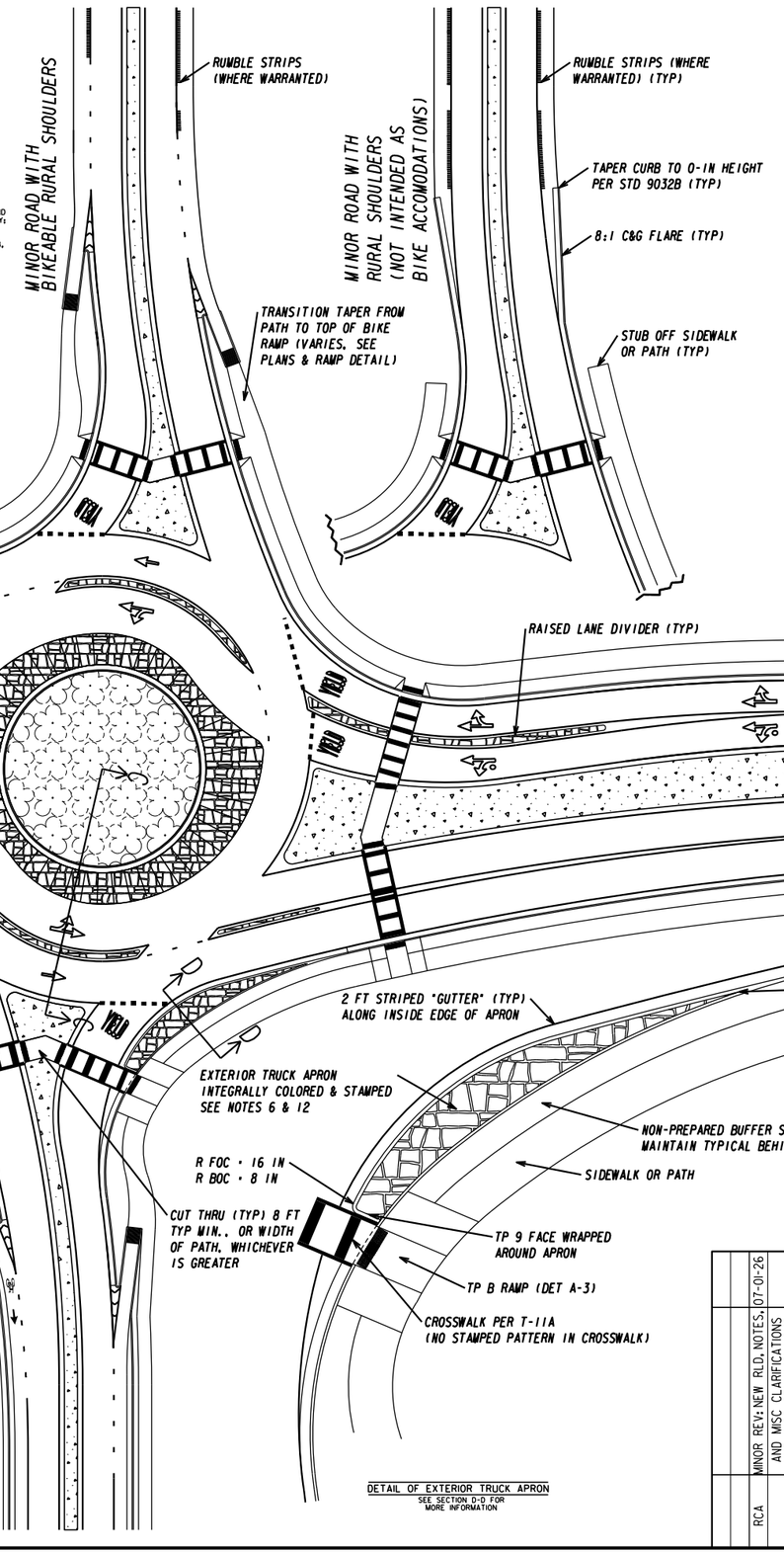

GENERAL NOTES:

1) GEORGIA STANDARD SPECIFICATIONS, CURRENT EDITION, AND SUPPLEMENTS THERETO APPLY.
2) A MULTILANE 2X1 "HYBRID" ROUNDABOUT WITH A "STAY-IN-LANE" DESIGN IS DEPICTED. THE DESIGN OF TRUCK APRONS AND EXTERIOR BORDER AREA MAY BE APPLIED TO SINGLE LANE ROUNDABOUTS OR OTHER MULTILANE CONFIGURATIONS. RAISED LANE DIVIDERS MAY BE SUBSTITUTED WITH RUMBLE STRIP LANE DIVIDERS FOR USE AT "STRADDLE LANE" MULTILANE ROUNDABOUTS WHEN SPECIFIED IN PLANS. (SEE DETAIL RA-3 FOR DESIGN OF RURAL ROUNDABOUT SECTIONS.)
3) THIS DETAIL GENERALLY SHOWS FLEXIBLE PAVEMENT, BUT MAY BE USED WITH RIGID PAVEMENT DESIGNS. SEE PLANS FOR PAVEMENT SCHEDULE, HORIZONTAL AND VERTICAL DESIGN, CROSS SLOPES, ETC.
4) SEE GA STD 9032B FOR CONCRETE CURB AND GUTTER AND MEDIAN DESIGN. TP 1 AND TP 9 FACES SHALL BE 4-IN IN HEIGHT ABOVE PAVEMENT AT INTERIOR TRUCK APRONS (OR AS SHOWN IN PLANS) AND 3-IN HEIGHT AT RAISED LANE DIVIDERS.
5) SEE DETAILS A-3 AND A-4 FOR DESIGN OF ADA CURB RAMPS, DETECTABLE WARNING SURFACES AND PEDESTRIAN CUT-THRUS. OUTSIDE OF TRUCK APRONS, TP A, B, AND C RAMPS ARE ACCEPTABLE FOR USE; IF PATH IS PRESENT, TP A RAMPS SHOULD BE USED IF FEASIBLE. REFER TO DETAIL OF EXTERIOR APRON FOR RAMP DESIGN AT APRONS. (IF PRESENT, TACTILE DIRECTIONAL INDICATORS REQUIRE A SPECIAL DETAIL. SEE PLANS.)
6) MOUNTABLE CONCRETE AREAS (TYPE 1 OR 9 FACE) SHALL BE INTEGRALLY COLORED WITH FEDERAL STANDARD NO. 30108 OR 30152, AND SHALL BE STAMPED WITH BRICK OR COBBLE PATTERNING. NON-MOUNTABLE AREAS (TYPE 2 OR 7 FACE) MAY BE INTEGRALLY COLORED WITH FEDERAL STANDARD NO. 30266 OR 33446.
7) TRUCK APRON TRANSVERSE CONTRACTION JOINTS SHALL BE EQUALLY SPACED; WHEN THE APRON IS A CONSTANT WIDTH, THE OUTSIDE CHORD SHALL BE LESS THAN OR EQUAL TO 15FT-0IN, AND THE INSIDE CHORD SHALL BE GREATER THAN OR EQUAL TO 4FT-0IN. APRON WIDTHS MAY VARY; REFER TO PLANS. IF APRON IS WIDER THAN 14-FT, LONGITUDINAL SAWED JOINTS, SEALS, AND TIE-BARS ARE REQUIRED; SEE GA STANDARD 5046H FOR ADDITIONAL PORTLAND CEMENT CONCRETE PAVING JOINT DETAILS.
8) FOR RIGID PAVEMENT DESIGNS, THE CONTRACTOR SHALL SUBMIT JOINT DETAILS TO THE ENGINEER.
9) SEE PLANS FOR THICKNESS, MATERIAL, AND CURB FACE OF APPROACH ROADWAY MEDIANS (IF PRESENT). MEDIAN SPLITTER ISLANDS SHOULD USE MOUNTABLE OR SLOPED CURB FACE WITHIN THE LIMITS OF ROUNDABOUT APPROACH AND DECELERATION ZONE, AND ADJACENT TO CIRCULATORY ROADWAY. (TYPICAL TREATMENT IS TP 7 FACE PER SECTION A-A; TP 1 OR TP 9 FACE SHOULD BE USED ALONG SPLITTER ISLANDS IF NEEDED TO FACILITATE THE ROADWAY CHECK VEHICLE OR AS OTHERWISE SHOWN IN THE PLANS.)
10) BIKE RAMPS ARE REQUIRED TO CONNECT SHARED-USE PATH TO BIKEABLE SHOULDER OR STREET-LEVEL BIKE LANES.
11) BUFFER STRIPS SHOULD CONSIST OF A NON-PREPARED SURFACE. (DO NOT USE STAMPED CONCRETE OR SIMILAR TREATMENTS.) SEE SECTION B-B FOR MORE INFORMATION ON CONSTRAINED BUFFERS.
12) CONCRETE SPLITTER ISLANDS, TRUCK APRONS, AND RAISED LANE DIVIDERS SHALL INCLUDE REINFORCING BARS OR WELDED WIRE FABRIC PER STD 9032B.
13) INTERIOR TRUCK APRON (C-C (1)) SHALL BE QUANTIFIED AND PAID FOR AS PLAIN PC CONC. PAVEMENT. INTERIOR TRUCK APRON (SECTION C-C (2)), EXTERIOR TRUCK APRON (SECTION D-D), AND RAISED LANE DIVIDERS SHALL BE QUANTIFIED AND PAID FOR AS CLASS A CONCRETE WITH REINFORCING STEEL. NON-MOUNTABLE MEDIAN SPLITTER ISLANDS SHALL BE PAID FOR AS CONCRETE MEDIAN, AND ANY MOUNTABLE MEDIAN SPLITTER ISLANDS SHOULD BE QUANTIFIED AND PAID FOR AS CLASS A CONCRETE WITH REINFORCING STEEL.

RAISED LANE DIVIDER GENERAL NOTES:
-OFFSET FROM FACE OF CURB TO ADJACENT LANE NOT SHOWN FOR DETAIL II OR III; VARIES AS SHOWN IN DETAIL I.
-HEIGHT OF CURB ABOVE PAVEMENT SHALL BE 3-IN FOR ALL DETAILS.
-LATERAL PLACEMENT OF TIE BARS SHALL BE AS SHOWN IN THE DETAILS. LATERAL TIE BAR SPACING MAY BE INCREASED PROPORTIONALLY WITH INCREASES IN OVERALL DIVIDER WIDTH, BUT SHALL NOT BE PLACED UNDER SLOPED CURB OR RADII.
-RAISED LANE DIVIDERS SHALL USE CLASS A CONCRETE.
-A TAPERED NOSE SHALL NOT BE USED WITH DETAIL III DIVIDERS ON RIGID PAVEMENT.

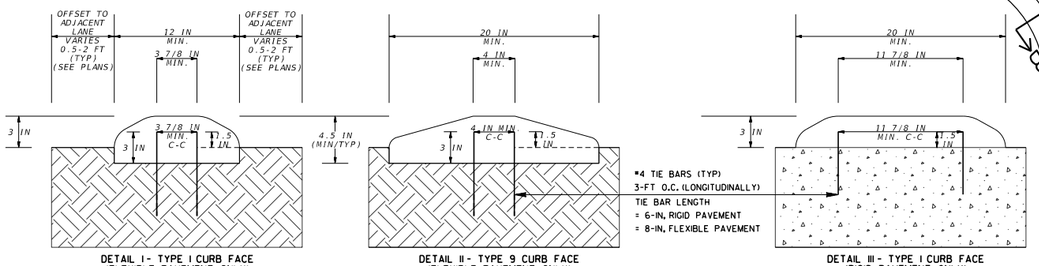

DETAIL I - TYPE I CURB FACE (FLEXIBLE PAVEMENT ONLY)

DETAIL II - TYPE 9 CURB FACE (FLEXIBLE PAVEMENT ONLY)

DETAIL III - TYPE I CURB FACE (RIGID PAVEMENT ONLY)

DETAILS OF RAISED LANE DIVIDERS

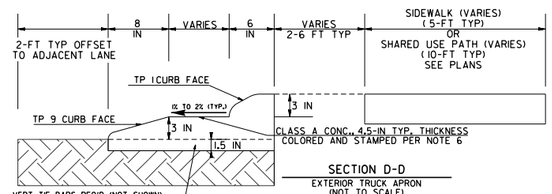

SECTION D-D
EXTERIOR TRUCK APRON
(NOT TO SCALE)

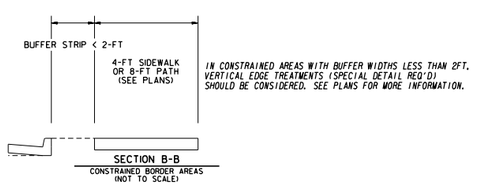

SECTION B-B
CONSTRAINED BORDER AREAS
(NOT TO SCALE)

IN CONSTRAINED AREAS WITH BUFFER WIDTHS LESS THAN 2FT, VERTICAL EDGE TREATMENTS (SPECIAL DETAIL REQ'D) SHOULD BE CONSIDERED. SEE PLANS FOR MORE INFORMATION.

BIKE RAMP DETAIL

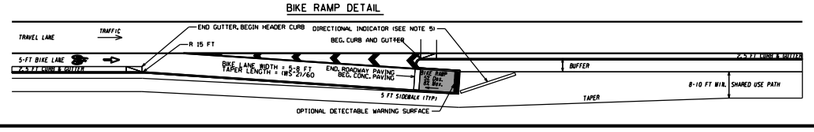

BIKE RAMP NOTES:
-SEE PLANS FOR SITE-SPECIFIC DETAILS
-RAMP IS SHOWN FROM FLUSH BIKE LANE TO PATH BUT THE DESIGN INTENT IS THE SAME FOR TRANSITIONS TO/FROM PAVED, BIKEABLE SHOULDER TO PATHS.

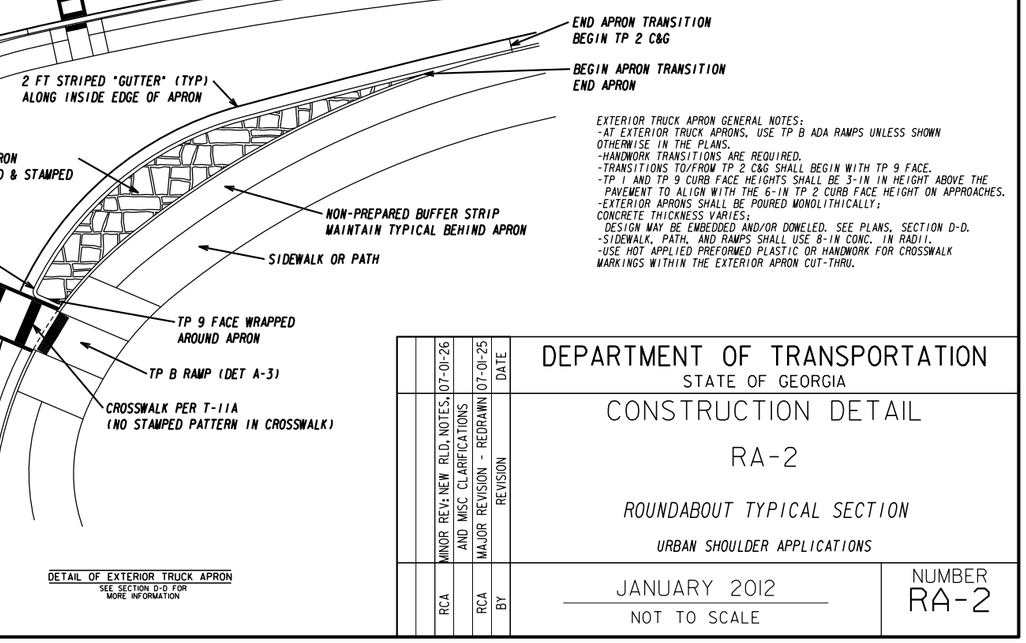

DETAIL OF EXTERIOR TRUCK APRON
SEE SECTION D-D FOR MORE INFORMATION

EXTERIOR TRUCK APRON GENERAL NOTES:
-AT EXTERIOR TRUCK APRONS, USE TP B ADA RAMPS UNLESS SHOWN OTHERWISE IN THE PLANS.
-HANDWORK TRANSITIONS ARE REQUIRED.
-TRANSITIONS TO/FROM TP 2 C&G SHALL BEGIN WITH TP 9 FACE.
-TP 1 AND TP 9 CURB FACE HEIGHTS SHALL BE 3-IN IN HEIGHT ABOVE THE PAVEMENT TO ALIGN WITH THE 6-IN TP 2 CURB FACE HEIGHT ON APPROACHES.
-EXTERIOR APRONS SHALL BE POURED MONOLITHICALLY; CONCRETE THICKNESS VARIES; DESIGN MAY BE EMBEDDED AND/OR DOWELED. SEE PLANS, SECTION D-D.
-SIDEWALK, PATH, AND RAMPS SHALL USE 8-IN CONC. IN RADII.
-USE HOT APPLIED PREFORMED PLASTIC OR HANDWORK FOR CROSSWALK MARKINGS WITHIN THE EXTERIOR APRON CUT-THRU.

DATE	REVISION
07-01-26	MINOR REV: NEW RLD, NOTES, AND MISC CLARIFICATIONS
07-01-25	MAJOR REVISION - REDRAWN
BY	
RCA	
RCA	

DEPARTMENT OF TRANSPORTATION
STATE OF GEORGIA

CONSTRUCTION DETAIL
RA-2

ROUNDABOUT TYPICAL SECTION

URBAN SHOULDER APPLICATIONS

JANUARY 2012
NOT TO SCALE

NUMBER RA-2

GDOT Georgia Department of Transportation | P.I. No. XXXXXXX

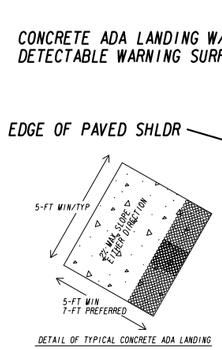

DETAIL OF TYPICAL CONCRETE ADA LANDING

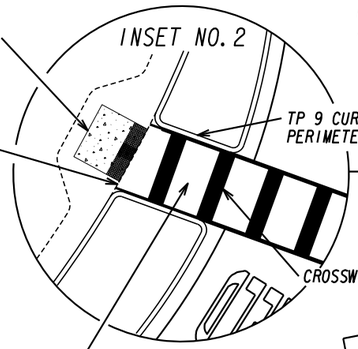

CONCRETE ADA LANDING W/ DETECTABLE WARNING SURFACE

EDGE OF PAVED SHLDR

TP 9 CURB FACE SHALL EXTEND PERIMETER OF EXTERIOR TRUCK APRON

CROSSWALK STRIPED THROUGH EXTERIOR APRON

APRON OR BLISTER CUT-THRUS SHALL BE MINIMUM 9FT-4IN WIDE.

PLACE ADA LANDING OUTSIDE PAVED SHOULDER AND EXTERIOR APRON OR BLISTER (TYP)

EXTERIOR TRUCK APRON (TYP) (SEE PLANS FOR LOCATIONS)

EDGE LINE RUMBLE STRIPS WHERE WARRANTED (DET T-35, T-36, AND T-37)

MARKED CROSSWALK PER DETAIL T-11A (BETWEEN ADA FACILITIES) (TYP)

CONCRETE ADA LANDING PAD (TYP)

IF PRESENT, DO NOT EXTEND RUMBLE STRIPS THROUGH CROSSWALK (TYP)

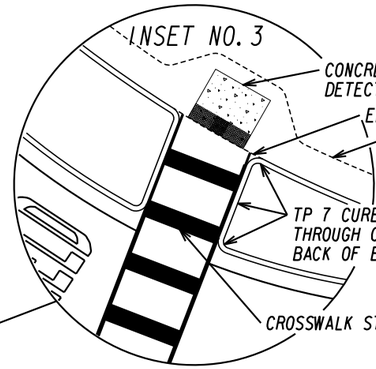

CONCRETE ADA LANDING W/ DETECTABLE WARNING SURFACE

EDGE OF PAVED SHOULDER

OUTER EDGE GRADED SHOULDER

TP 7 CURB FACE ADJACENT TO TRAVEL LANE AND THROUGH CUT-THRU; TP 2 FACE OPTIONAL AT BACK OF BLISTER (SEE SECTION B-B & NOTE 11)

CROSSWALK STRIPED THROUGH BLISTER

CONC. MEDIAN SPLITTER ISLAND, WIDTH VARIES; SEE PLANS
6-IN OR 7.5-IN W/ TP 7 CURB FACE (TYP)
SEE STD 9032B

8:1 TAPER (TYP) FOR TRANSITION FROM PAVED SHOULDER TO SPILLWAY

ADD DRAINAGE STRUCTURES AS NEEDED; WHEN ADJACENT TO EXTERIOR TRUCK APRONS, STRUCTURES SHOULD BE LOCATED OUTSIDE THE SWEPT PATHS.

LENGTH/WIDTH OF BLISTERS VARY: SEE PLANS AND NOTE 10

BLISTER (TYP) (USE UNLESS OTHERWISE SPECIFIED IN PLANS)

SEE PLANS AND DET. T-19 FOR LOCATION OF TRANSVERSE RUMBLE STRIPS

SHOULDER RUMBLE STRIPS WHERE WARRANTED (DET T-31 & T-32)

SPLITTER ISLAND CUT THRU 8-FT MIN/TYP WIDTH

DOTTED LINE FOR ENTRANCE OR EXIT TO/FROM BIKEABLE SHOULDERS WHERE REQ'D (TYP)

INTERIOR TRUCK APRON WIDTH VARIES BASED ON TRUCK SWEPT PATHS

TRANSVERSE SAWED CONTRACTION JOINTS SEE NOTE 7

LENGTH/WIDTH OF EXTERIOR TRUCK APRONS VARY: SEE PLANS. VEHICLES SHOULD NOT TRACK ONTO GRADED SHOULDER.

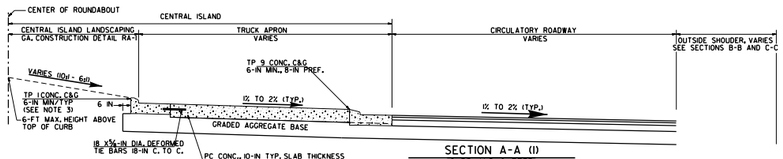

SECTION A-A (1)
CURB AND GUTTER FOR USE AS REQUIRED BY DRAINAGE
NOT TO SCALE

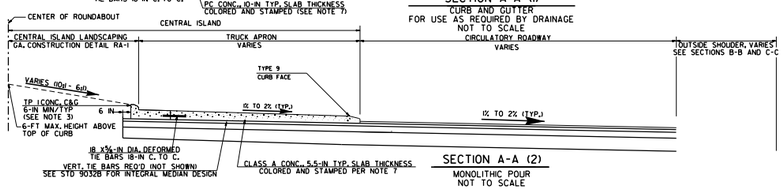

SECTION A-A (2)
MONOLITHIC POUR
NOT TO SCALE

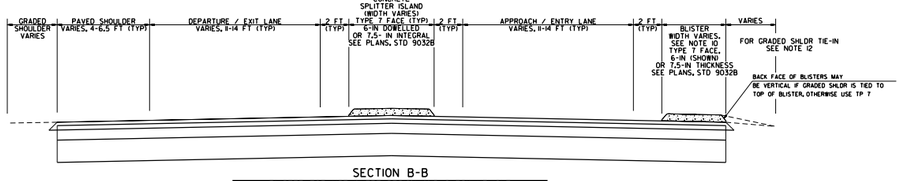

SECTION B-B
BLISTER FOR USE WHERE DESIGN AND CHECK VEHICLE REMAIN ENTIRELY WITHIN TRAVELED WAY OR NORMAL PAVEMENT
NOT TO SCALE

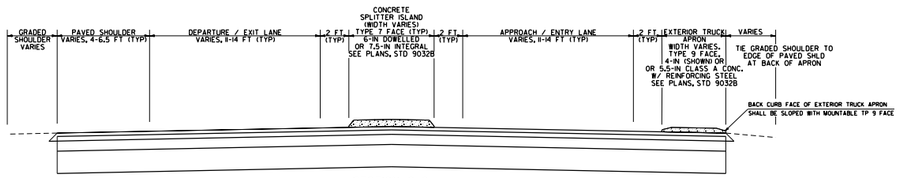

SECTION C-C
EXTERIOR TRUCK APRON FOR USE WHERE DESIGN OR CHECK VEHICLE OVERTRACK OUTSIDE OF TRAVEL WAY OR NORMAL PAVEMENT
NOT TO SCALE

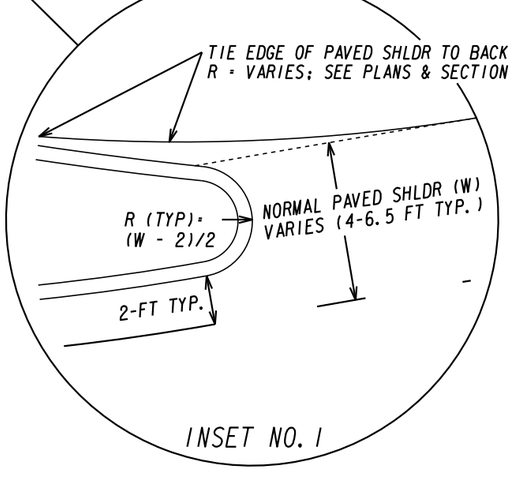

INSET NO. 1

GENERAL NOTES:

1) GEORGIA STANDARD SPECIFICATIONS, CURRENT EDITION, AND SUPPLEMENTS THERETO APPLY
2) THIS DETAIL MAY BE USED FOR SINGLE- OR MULTI-LANE ROUNDABOUTS IN RURAL CONTEXTS WHEN URBAN BORDER AREA IS NOT REQUIRED. (SEE DETAIL RA-2 FOR DESIGN OF MULTILANE ROUNDABOUT RAISED LANE DIVIDERS.) THIS DETAIL SHOWS FLEXIBLE PAVEMENT, BUT MAY BE USED WITH RIGID PAVEMENT DESIGNS.
3) SEE PLANS FOR PAVEMENT SCHEDULE, HORIZONTAL AND VERTICAL DESIGN, CROSS SLOPES, ETC.
4) SEE GA STANDARD 9032B FOR CONCRETE CURB AND GUTTER AND MEDIAN DESIGN. TP 1 & TP 9 FACES SHOULD BE 4-IN IN HEIGHT ABOVE PAVEMENT AT TRUCK APRONS.
5) SEE DETAIL A-4 FOR DETAILS OF ADA DETECTABLE WARNING SURFACES AND PED. CUT-THRUS.
6) REQUIRED PAVEMENT MARKINGS, STANDARD AND SPECIAL ROADSIDE SIGNS ARE NOT SHOWN. SEE PLANS AND GA CONSTRUCTION STANDARDS/DETAILS.
7) MOUNTABLE AREAS (TYPE 1 OR 9 FACE) SHALL BE INTEGRALLY COLORED WITH FEDERAL STANDARD NO. 30108 OR 30152, AND SHALL BE STAMPED WITH BRICK OR COBBLE PATTERNING. NON-MOUNTABLE AREAS (TYPE 2 OR 7 FACE) MAY BE INTEGRALLY COLORED WITH FEDERAL STANDARD NO. 30266 OR 33446.
8) TRANSVERSE CONTRACTION JOINTS SHALL BE EQUALLY SPACED; WHEN THE APRON IS A CONSTANT WIDTH, THE OUTSIDE CHORD SHALL BE LESS THAN OR EQUAL TO 15FT-0IN, AND THE INSIDE CHORD SHALL BE GREATER THAN OR EQUAL TO 4FT-0IN. APRON WIDTHS MAY VARY; REFER TO PLANS. IF APRON IS WIDER THAN 14-FT, LONGITUDINAL SAWED JOINTS, SEALS, AND TIE-BARS ARE REQUIRED; SEE GA STANDARD 5046H FOR ADDITIONAL PORTLAND CEMENT CONCRETE PAVING JOINT DETAILS.
9) FOR RIGID PAVEMENT DESIGNS, THE CONTRACTOR SHALL SUBMIT JOINT DETAILS TO THE ENGINEER.
10) EXTERIOR APRON AND BLISTER WIDTHS VARY; WHEN MEASURED AT THE APPROACH RADIUS, SHOULD NOT BE LESS THAN HALF THE WIDTH OF THE NARROWEST ADJACENT PAVED SHOULDER. SIZE MOUNTABLE EXTERIOR TRUCK APRONS BASED ON SWEPT PATHS.
11) PEDESTRIAN ACCOMMODATIONS INCL. LANDINGS, CUT-THRUS, AND DETECTABLE WARNING SURFACES SHALL BE PROVIDED AS SHOWN IN PLANS.
12) WHERE PEDESTRIAN LANDINGS ARE PROVIDED OUTSIDE BLISTERS, TIE THE GRADED SHOULDER TO THE PAVED SHOULDER.
13) USE HOT APPLIED PREFORMED PLASTIC OR HANDWORK FOR CROSSWALK MARKINGS WITHIN EXTERIOR APRON OR BLISTER CUT-THRUS.
14) CONCRETE SPLITTER ISLANDS, TRUCK APRONS, RAISED LANE DIVIDERS, AND BLISTERS SHALL INLCUDE REINFORCING BARS OR WELDED WIRE FABRIC PER STD 9032B.
15) INTERIOR TRUCK APRON (SECTION A-A (1)) SHALL BE QUANTIFIED AND PAID FOR AS PLAIN PC CONC. PAVEMENT. INTERIOR TRUCK APRON (SECTION A-A (2)), EXTERIOR TRUCK APRON (SECTION C-C), AND RAISED LANE DIVIDERS SHALL BE QUANTIFIED AND PAID FOR AS CLASS A CONCRETE WITH REINFORCING STEEL. NON-MOUNTABLE MEDIAN SPLITTER ISLANDS AND EXTERIOR BLISTERS SHALL BE PAID FOR AS CONCRETE MEDIAN. ANY MOUNTABLE MEDIAN SPLITTER ISLANDS SHOULD BE QUANIFIED AND PAID FOR AS CLASS A CONCRETE WITH REINFORCING STEEL.

BY	REVISION	DATE
RCA	MISC; ADDED NOTES 14 & 15	07/01/26

DEPARTMENT OF TRANSPORTATION
STATE OF GEORGIA

CONSTRUCTION DETAIL

RA-3

ROUNDABOUT TYPICAL SECTION

RURAL SHOULDER APPLICATIONS

JULY 2025
NOT TO SCALE

NUMBER RA-3

TYPICAL PAVEMENT MARKINGS

GUIDELINES FOR ADVANCE PLACEMENT OF WARNING SIGNS
(Source: 2023 Edition MUTCD)

SPEED (MPH)	ADVANCE PLACEMENT DISTANCE (FT) CONDITION B (0 MPH) MINIMUM
0-20	115
25	155
30	200
35	250
40	305
45	360
50	425
55	495
60	570
65	645

See Guidelines for
X = Advance Placement of
Warning Sign
Distance Table

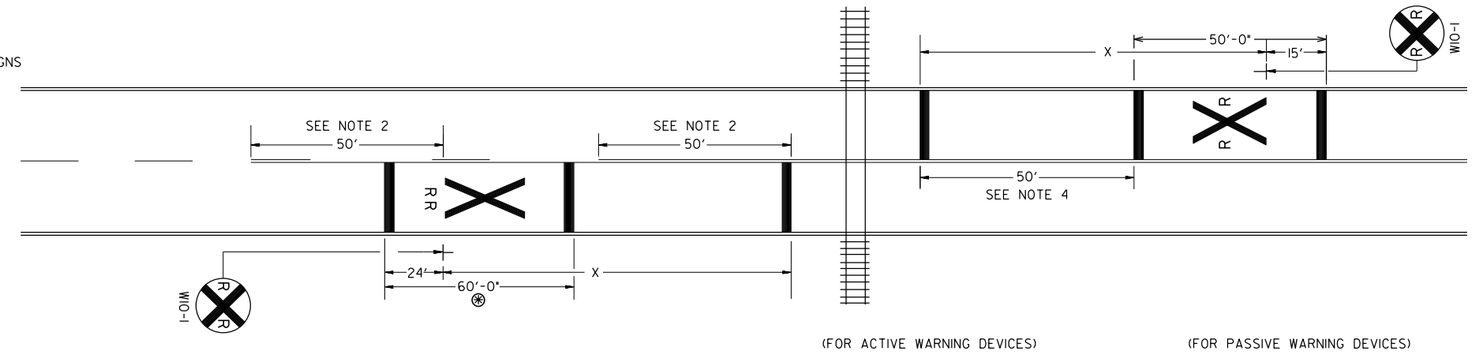

⊛ NARROW RR-HWY CROSSING SYMBOL TO BE USED IN LANES LESS THAN 11'-0". PAYMENT SHALL BE SAME AS RR-HWY CROSSING SYMBOL.

NOTES:
1. ROADWAY PAVEMENT MARKINGS SHALL BE ADDED FOR ALL RAILROAD CROSSING UPGRADES.
2. NO-PASSING ZONE MARKINGS IN APPROACH TO CROSSING SHALL BE INSTALLED A MINIMUM OF 50 FEET BEFORE RR ADVANCE WARNING SIGN (W10-1) AND 50 FEET BEYOND THE STOP LINE FOR THE OPPOSING TRAFFIC LANE.
3. WHERE CENTERLINE AND/OR EDGE LINES DO NOT EXIST, RR SYMBOL MARKINGS SHALL EXTEND FROM THE EDGE OF TRAVELED WAY TO AT LEAST HALFWAY ACROSS THE PAVEMENT.
4. THE DOWNSTREAM TRANSVERSE LINE OF THE RR-HWY CROSSING SYMBOL SHOULD BE AT LEAST 50 FEET UPSTREAM FROM THE STOP OR YIELD LINE AT THE GRADE CROSSING.
5. IF GRADE CROSSING PAVEMENT MARKINGS ARE USED ON A MULTI-LANE APPROACH TO A GRADE CROSSING, IDENTIAL MARKINGS SHALL BE PLACED IN EACH APPROACH LANE THAT CROSSES THE TRACKS.

(FOR ACTIVE WARNING DEVICES)

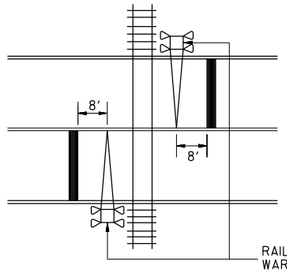

RAILROAD ACTIVE WARNING DEVICES

(FOR PASSIVE WARNING DEVICES)

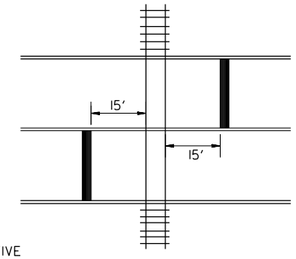

CROSSINGS WITH LIMITED STORAGE

GDOT Georgia Department of Transportation | P. I. No. XXXXXXX

NOTES:
1. A W10-11 SIGN SUPPLEMENTED BY A W10-11A SIGN SHOULD BE USED WHERE THERE IS A HIGHWAY INTERSECTION IN CLOSE PROXIMITY TO THE GRADE CROSSING AND AN ENGINEERING STUDY DETERMINES THAT ADEQUATE SPACE IS NOT AVAILABLE TO STORE A DESIGN VEHICLE(S) BETWEEN THE HIGHWAY INTERSECTION AND THE TRAIN.
2. THE W10-11 AND W10-11a SIGNS SHOULD BE MOUNTED IN ADVANCE OF THE GRADE CROSSING AT AN APPROPRIATE LOCATION TO ADVISE DRIVERS OF THE SPACE AVAILABLE FOR HIGHWAY VEHICLE STORAGE BETWEEN THE HIGHWAY INTERSECTION AND THE GRADE CROSSING.
3. OPTIONAL - A STORAGE SPACE (W10-11B) SIGN MAY BE MOUNTED BEYOND THE GRADE CROSSING AT THE HIGHWAY INTERSECTION UNDER THE STOP OR YIELD SIGN OR JUST PRIOR TO THE SIGNALIZED INTERSECTION TO REMIND DRIVERS OF THE STORAGE SPACE BETWEEN THE TRACKS AND THE HIGHWAY INTERSECTION.

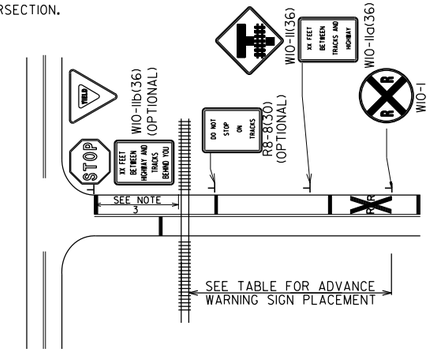

TYPICAL SIGN SYSTEM WHERE PARALLEL ROADWAY IS LESS THAN 100 FEET FROM CROSSING

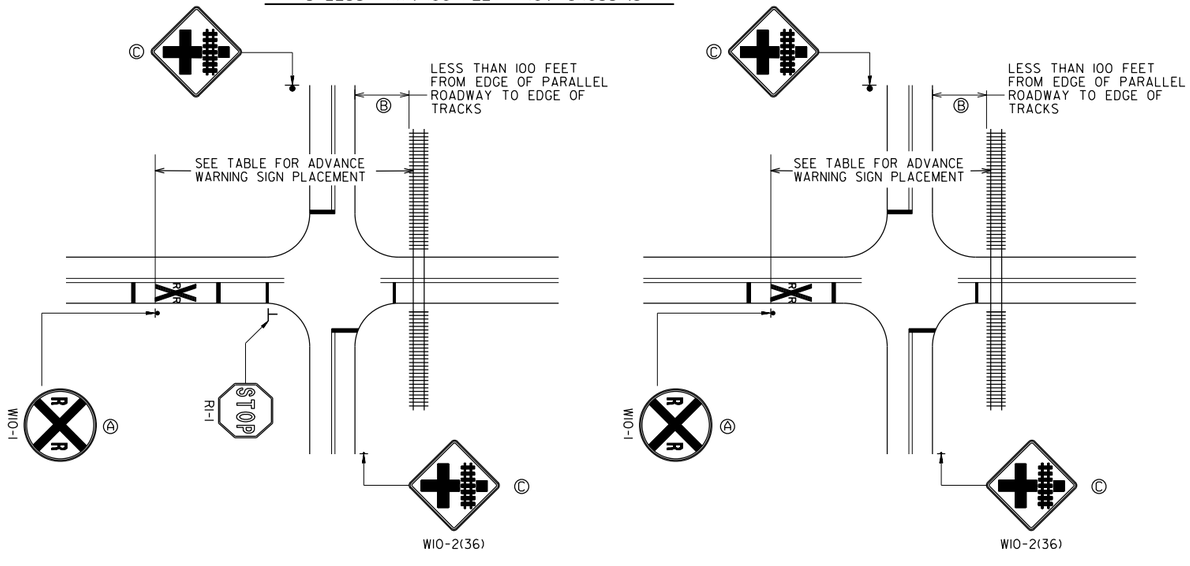

TYPICAL SIGN SYSTEM WHERE PARALLEL ROADWAY IS 100 FEET OR GREATER FROM CROSSING

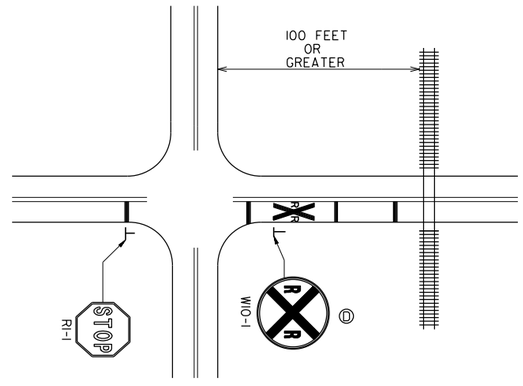

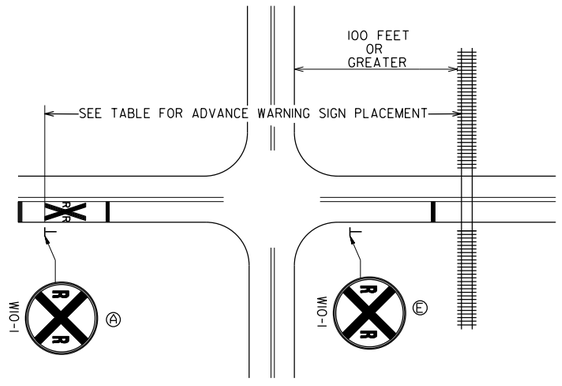

NOTES:

Ⓐ IF A YIELD AHEAD OR STOP AHEAD SIGN IS INSTALLED TO WARN ABOUT A STOP OR YIELD CONDITION AT THE CROSSING, THE W10-1 SIGN SHALL BE INSTALLED UPSTREAM FROM THE YIELD AHEAD OR STOP AHEAD SIGN. THE W10-1 SIGN, YIELD AHEAD OR STOP AHEAD SIGN SHALL BE LOCATED IN ACCORDANCE WITH TABLE 2C-3 OF THE M.U.T.C.D. THE MINIMUM DISTANCE BETWEEN THE SIGNS SHALL BE IN ACCORDANCE WITH SECTION 2C.04 AND TABLE 2C-3 OF THE M.U.T.C.D.

Ⓑ IF THE DISTANCE BETWEEN THE TRACKS AND A PARALLEL HIGHWAY, FROM THE EDGE OF THE TRACKS TO THE EDGE OF THE PARALLEL ROADWAY, IS LESS THAN 100 FEET, W10-2, W10-3, OR W10-4 SIGNS SHALL BE INSTALLED ON EACH APPROACH OF THE PARALLEL HIGHWAY TO WARN ROAD USERS MAKING A TURN THAT THEY WILL ENCOUNTER A GRADE CROSSING SOON AFTER MAKING A TURN, AND A W10-1 SIGN FOR THE APPROACH TO THE TRACKS SHALL NOT BE REQUIRED TO BE BETWEEN THE TRACKS AND THE PARALLEL HIGHWAY. IF A DEDICATED TURN ONLY LANE EXISTS FOR THE MOVEMENT TOWARD THE CROSSING, A RRX MARKING SYMBOL SHOULD BE INSTALLED IN THE DEDICATED TURN LANE.

Ⓒ SIGN PLACEMENT SHOULD BE IN ACCORDANCE WITH THE GUIDELINES FOR INTERSECTION WARNING SIGNS IN THE M.U.T.C.D.

Ⓓ IF STOP OR YIELD SIGNS ARE PRESENT AT THE INTERSECTION PRIOR TO THE CROSSING, THE W10-1 SIGN AND RR-HWY CROSSING SYMBOL ARE REQUIRED ONLY BETWEEN THE INTERSECTION AND THE CROSSING.

Ⓔ IF THERE ARE NO STOP OR YIELD SIGNS AT THE INTERSECTION PRIOR TO THE CROSSING, OR A TRAFFIC SIGNAL IS PRESENT, THE W10-1 AND RR-HWY CROSSING SYMBOL ADVANCE PLACEMENT BY SPEED IS REQUIRED. A SECONDARY W10-1 SIGN SHOULD BE INSTALLED BETWEEN THE CROSSING AND THE INTERSECTION. IF A SECONDARY W10-1 SIGN CANNOT BE INSTALLED, W10-2, W10-3, OR W10-4 SIGNS SHOULD BE PLACED ON THE PARALLEL ROADWAYS THAT INTERSECT BETWEEN THE INSTALLED W10-1 AND CROSSING.

DEPARTMENT OF TRANSPORTATION
STATE OF GEORGIA

CONSTRUCTION DETAIL

RAILROAD GRADE CROSSINGS SIGNING AND MARKING AT CROSSINGS WITH RR SIGNALS AND/OR GATES

DATE | REVISION | BY

JULY 2025
NOT TO SCALE

NUMBER
RR-01

STATE	PROJECT NUMBER	SHEET NO.	TOTAL SHEETS
GA.			

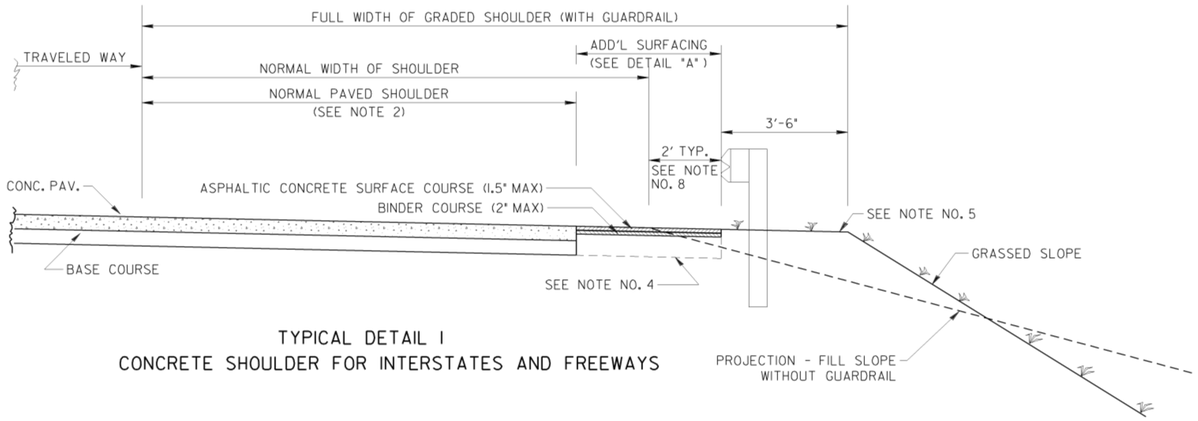

TYPICAL DETAIL 1
CONCRETE SHOULDER FOR INTERSTATES AND FREEWAYS

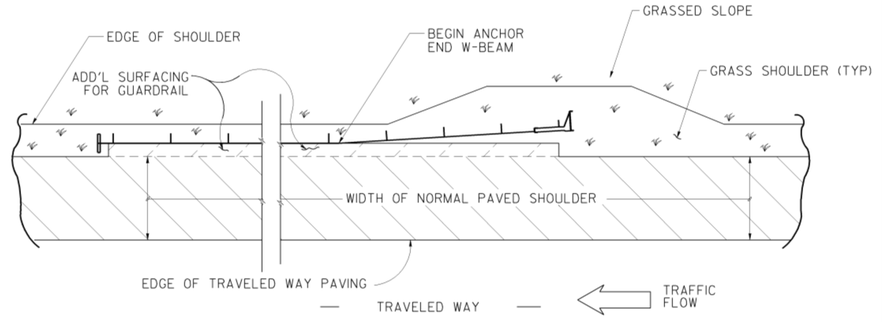

DETAIL "A"
ADDITIONAL SURFACING AT GUARDRAIL
TYPICAL PLAN VIEW

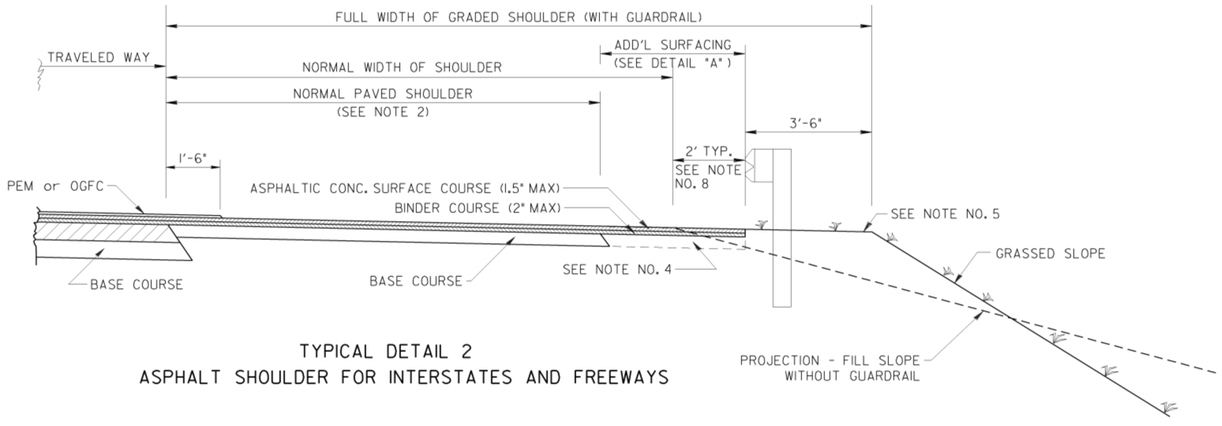

TYPICAL DETAIL 2
ASPHALT SHOULDER FOR INTERSTATES AND FREEWAYS

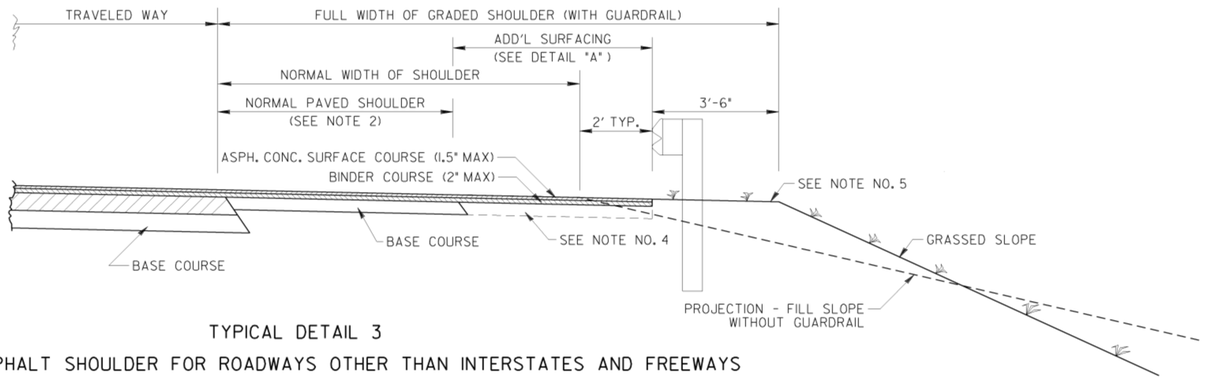

TYPICAL DETAIL 3
ASPHALT SHOULDER FOR ROADWAYS OTHER THAN INTERSTATES AND FREEWAYS

GENERAL NOTES:

1. USE OF THESE DETAILS IS WHERE A PAVED SHOULDER WIDTH IS SPECIFIED AND GUARDRAIL IS REQUIRED
2. DETAILS OF NORMAL SHOULDER PAVING ARE SHOWN FOR ILLUSTRATIVE PURPOSES ONLY. SEE PROJECT PLANS FOR MATERIALS AND DIMENSIONS.
3. ADDITIONAL SURFACING SHALL TERMINATE AT THE FACE OF THE GUARDRAIL.
4. THE NORMAL PAVED SHOULDER WIDTH MAY BE EXTENDED TO THE FACE OF THE GUARDRAL, WHERE SPECIFIED ON PROJECT PLANS.
5. IN AREAS WITH HIGHLY ERODIBLE SOIL, TEMPORARY EROSION CONTROL MEASURES SHALL BE PLACED ON THE SHOULDER UNTIL THE FORESLOPE IS FULLY GRASSED AND STABILIZED.
6. SEE GUARDRAIL STANDARDS FOR SHOULDER WIDENING DIMENSIONS AT ANCHORAGE, WHERE REQUIRED
7. SEE PROJECT PLANS FOR SHOULDER DIMENSIONS.
8. THE 2-FT OFFSET IS NOT REQUIRED FOR FREEWAYS AND INTERSTATES WITH 14-FT WIDE NORMAL SHOULDERS

BY	REVISION	DATE
BJO	ADDED NOTE 8	4-19-16
FBF	REM PVMT UNDER GUARDRAIL	3-1-16
	REV NOTES 3 &5, DETAIL A	
	COMBINED TWO S-4 DETAILS	9-30-02
	REVISED	4-23-02
	REVISED	

DEPARTMENT OF TRANSPORTATION
STATE OF GEORGIA

CONSTRUCTION DETAIL

SHOULDER PAVING AND SURFACING AT GUARDRAIL

NO SCALE

RE-DRAWN APRIL 2013

NUMBER
S-04

GDOT Georgia Department of Transportation | P. I. No. XXXXXXX

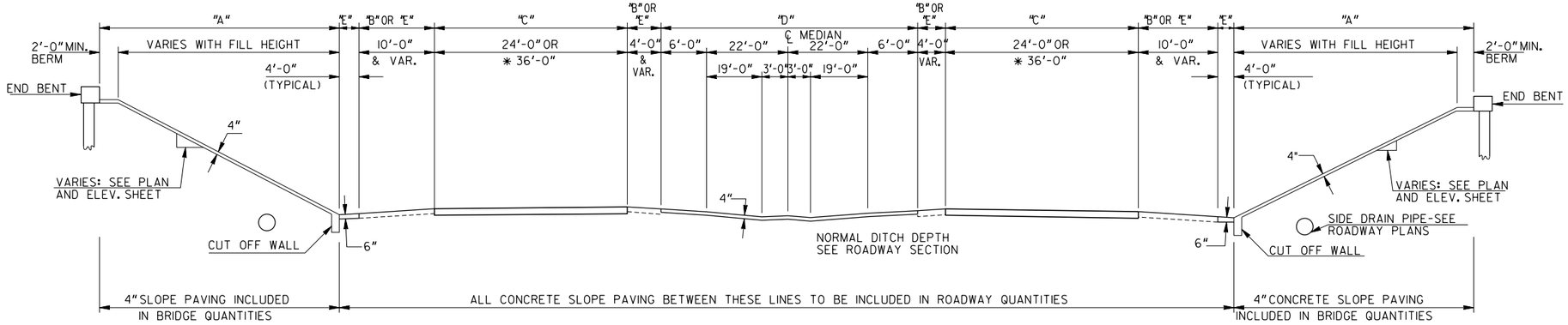

MAINLINE WITHOUT SIDE DITCHES

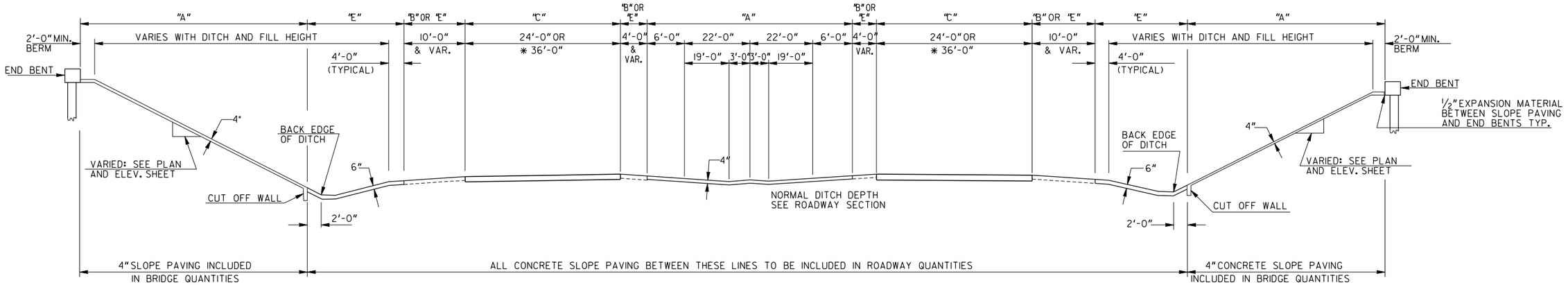

MAINLINE WITH SIDE DITCHES

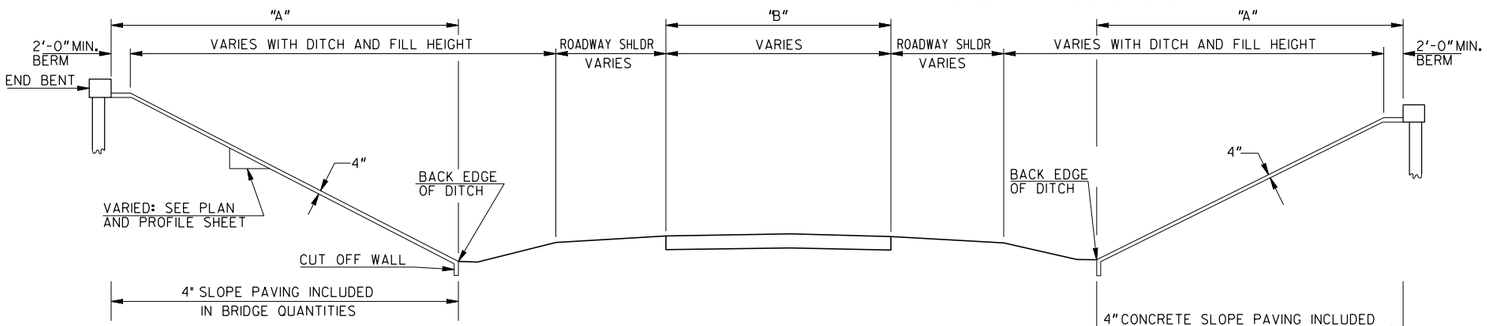

CROSS ROAD WITHOUT PAVED SHOULDER

* WHERE ROADWAY PAVEMENT WIDTH IS 36'-0", 6"CONCRETE SLOPE PAVING WILL BE USED IN MEDIAN INSTEAD OF THE 4"CONCRETE SLOPE PAVING SHOWN.

GENERAL NOTES:
"A" - 4"CONCRETE SLOPE PAVING
"B" - SHOULDER PAVEMENT PER ROADWAY PLANS
"C" - ROADWAY PAVEMENT PER ROADWAY PLANS

SECTIONS SHOWN ARE TYPICAL. FOR ACTUAL TEMPLATE SEE ROADWAY PLANS.

SECTIONS ARE SHOWN NORMAL TO ℄ MEDIAN. LIMIT OF 4"SLOPE PAVING IS OUT TO OUT WIDTH OF UNDERPASS PLUS 5'-0"EACH SIDE

"D" - OMIT 4"CONCRETE SLOPE PAVING IN MEDIAN BRIDGES 28 FT. WIDE OR LESS

"E" - 6"CONCRETE SLOPE PAVING

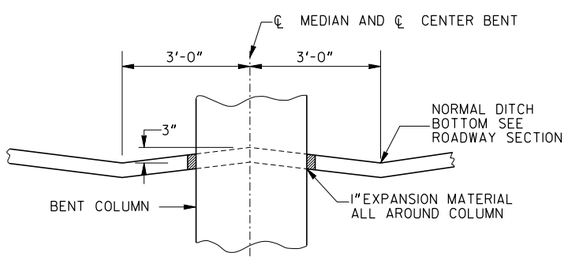

DETAIL AT MEDIAN

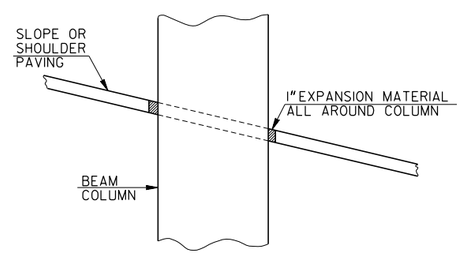

DETAIL AT COLUMN IN DITCH OR END FILL

BY	REVISION	DATE
R.M.U.	"B" OR "E" ON SHLD.	11-29-88
R.M.U.	ADDED 6" CONC. SLOPE PAV.	11-29-77

DEPARTMENT OF TRANSPORTATION
STATE OF GEORGIA

CONSTRUCTION DETAIL

TYPICAL SLOPE PAVING DETAILS

MARCH 1976
NOT TO SCALE

NUMBER S-06

STATE	PROJECT NUMBER	SHEET NO.	TOTAL SHEETS
GA.			

BENCHING DETAIL

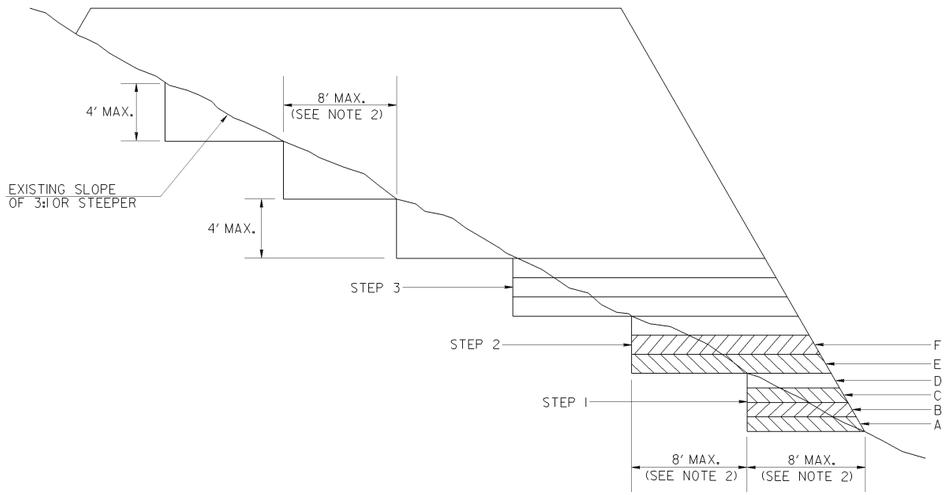

NOTES :

1. WHERE THE EMBANKMENT IS TO BE PLACED ON A HILLSIDE OR ANOTHER EXISTING EMBANKMENT HAVING A SLOPE OF 3 TO 1 OR STEEPER, THE FOUNDATION MUST BE BENCHED WHILE THE EMBANKMENT IS BEING MADE.(SEE DIAGRAM ABOVE)

2. THE DIAGRAM SHOWS THAT BEFORE LAYER "A" IS PLACED THE FIRST STEP (1) IS CUT INTO THE SLOPE A MAXIMUM DISTANCE OF ABOUT 8 FEET (ABOUT ¾ THE WIDTH OF THE TYPICIAL D-8 BULLDOZER BLADE). SUCCESSIVE LAYERS B, C, AND D ARE THEN PLACED BEFORE LAYER "E" IS PLACED, THE SECOND STEP IS CUT 8 FEET INTO THE SLOPE AND SUCCESSIVE LAYERS ARE AGAIN PLACED. IF IT IS ANTICIPATED THAT THE VERTICAL PART OF THE STEP WILL EXCEED 4 FEET IF A 8 FEET HORIZONTAL CUT IS MADE, THEN THE ACTUAL CUT STOPS WHEN THE VERTICAL PART REACHES A MAXIMUM OF 4 FEET ALLOWING THE HORIZONTAL DISTANCE TO VARY.

3. THE PROCESS OF BENCHING IS CONSIDERED INCIDENTAL TO THE ITEM OF UNCLASSIFIED EXCAVATION AND BORROW OR GRADING COMPLETE IN CONSTRUCTION OF THE EMBANKMENT AND NO ADDITIONAL MEASUREMENT OF QUANTITY OR PAYMENT WILL BE MADE FOR BENCHING.

SERRATED SLOPE DETAIL

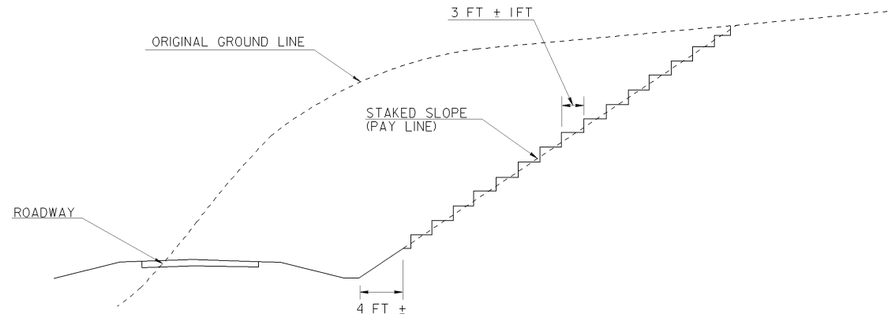

NO SCALE

NOTES :

1. SLOPES STEEPER THAN 3:1 SHALL BE SERRATED.

2. WIDTH OF STEP SHALL BE 3 FT \ 1FT.

3. HEIGHT OF STEP IS A FUNCTION OF WIDTH AND STAKED SLOPE.

4. TREAD OF STEP SHALL BE APPROXIMATELY HORIZONTAL.

5. SERRATED SLOPES SHALL BE USED ON ALL PROJECTS IN DISTRICTS 1, 6, AND 7, EXCEPT WHERE SPECIFICALLY EXCEPTED BY THE GEO-TECHNICAL BUREAU IN THE SOIL SURVEY REPORT. SERRATED SLOPES SHALL NOT BE USED IN DISTRICTS 2, 3, 4, AND 5, UNLESS REQUIRED BY THE SOIL SURVEY.

BY	REVISION	DATE
G.L.O.	REVISED BENCHING DETAIL &	6-18-09
R.M.U.	REVISED TITLE BLOCK.	
	GEN. REVISION	1-28-82

DEPARTMENT OF TRANSPORTATION
STATE OF GEORGIA

CONSTRUCTION DETAIL

SERRATED SLOPE DETAIL
BENCHING DETAIL

NO SCALE

JULY, 1981

NUMBER
S-07

STATE	PROJECT NUMBER	SHEET NO.	TOTAL SHEETS
GA.			

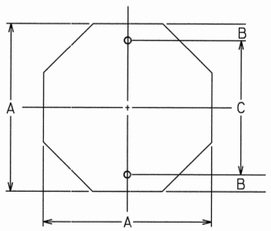

OCTAGON

A	B	C
24	3	18
30	3	24
36	3	30

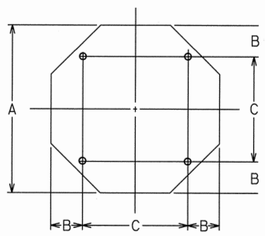

A	B	C
48	9	30

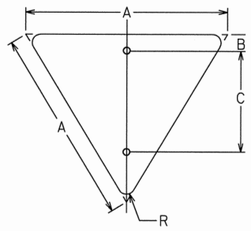

EQUILATERAL TRIANGLE

A	B	C	R
30	3	18	1 1/2
36	3	21	2
48	3	27	3

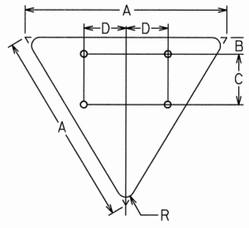

A	B	C	D	R
60	3	18	15	3

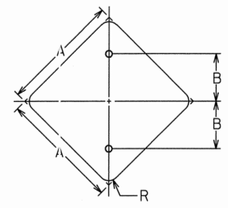

DIAMOND

A	B	R
24	12	1 1/2
30	15	1 7/8
36	18	2 1/4

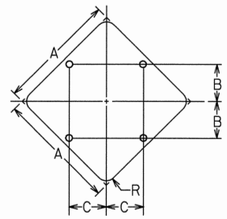

A	B	C	R
*36	10	10	2 1/4
48	15	15	3
60	18	18	3 3/4

* FOR TWO POST ERECTION

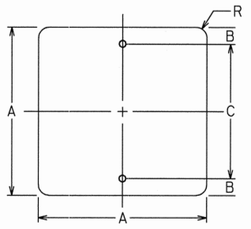

SQUARE

A	B	C	R
18	3	12	1 1/2
24	3	18	1 1/2
30	3	24	1 7/8

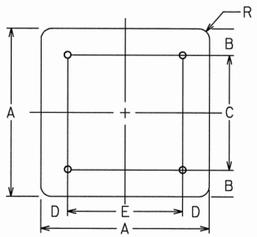

A	B	C	D	E	R
36	6	24	6	24	2 1/4
48	6	36	6	36	3

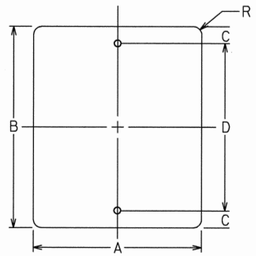

VERTICAL RECTANGLE

A	B	C	D	R
12	18	1 1/2	15	1 1/2
18	24	3	18	1 1/2
24	30	3	24	1 1/2
30	36	3	30	1 7/8

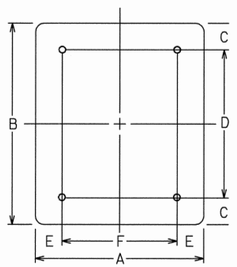

A	B	C	D	E	F	R
36	48	6	36	6	24	2 1/4
48	60	6	48	9	30	3

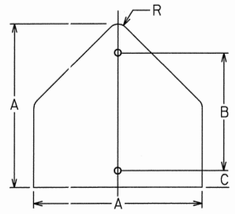

PENTAGON

A	B	C	R
30	21	3	1 7/8
36	24	3	2 1/4

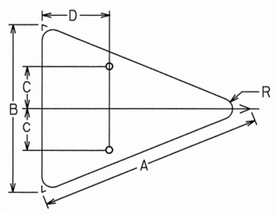

ISOSCELES TRIANGLE

A	B	C	D	R
40	30	7 1/2	12	1 7/8
48	36	9	15	2 1/4

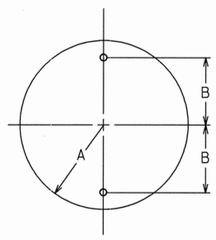

CIRCLE

A	B
15	12
18	15

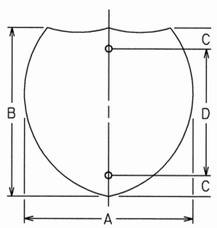

INTERSTATE SHIELD

A	B	C	D
24	24	3	18
30	24	3	18
36	36	6	24
45	36	6	24

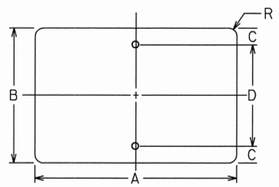

HORIZONTAL RECTANGLE

A	B	C	D	R
21	15	1 1/2	12	1 1/2
24	12	1 1/2	9	1 1/2
24	18	3	12	1 1/2
30	15	1 1/2	12	1 1/2
30	24	3	18	1 1/2
36	12	1 1/2	9	1 1/2
36	24	3	18	1 1/2
48	12	1 1/2	9	1 1/2
48	24	3	18	1 7/8

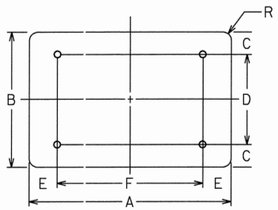

A	B	C	D	E	F	R
48	36	6	24	9	30	2 1/4
60	24	3	18	12	36	1 1/2
60	36	6	24	12	36	2 1/4

DATE	REVISIONS

GEORGIA DEPARTMENT OF TRANSPORTATION
OFFICE OF TRAFFIC SAFETY & DESIGN

NO SCALE — JANUARY 2000

DETAILS OF SIGN PLATES

T-01

STATE	PROJECT NUMBER	SHEET NO.	TOTAL SHEETS
GA.			

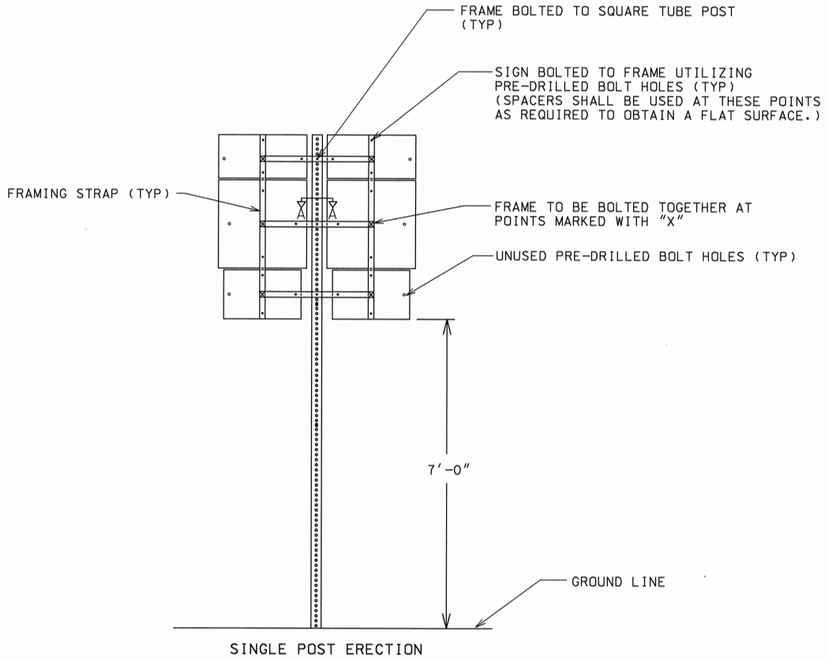

SINGLE POST ERECTION

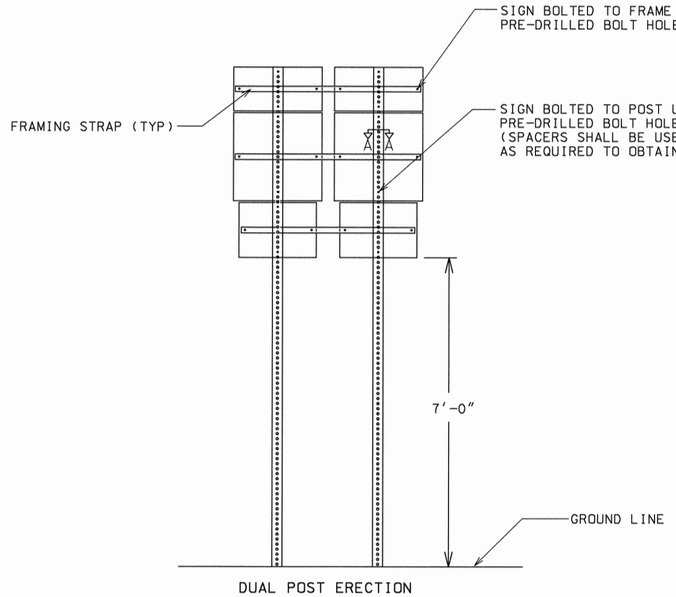

DUAL POST ERECTION

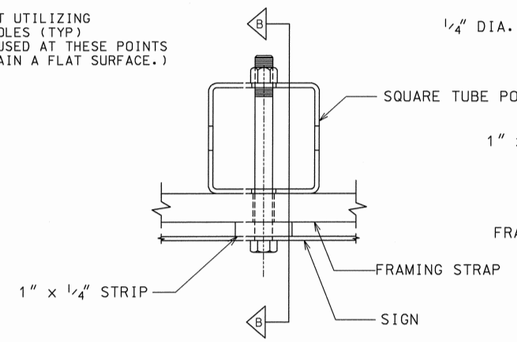

SECTION A-A

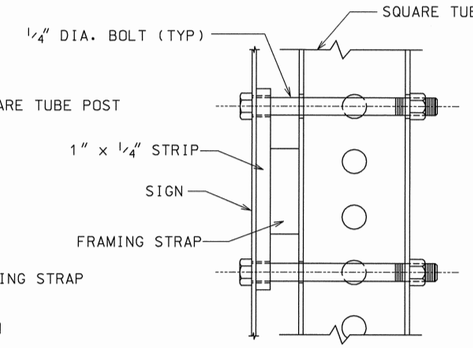

SECTION B-B
(ROTATED 90°)

OPTION #1 - FRAMING STRAP WITHOUT MOUNTING HOLE

(ALL FRAMING STRAPS SHALL BE 1 1/2" x 1/2" x REQUIRED LENGTH)

TYPICAL ASSEMBLY UNIT (BACK VIEW)

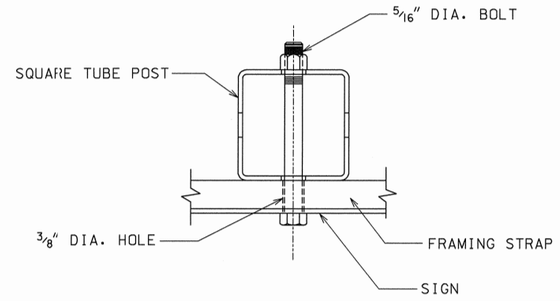

OPTION #2 - FRAMING STRAP WITH MOUNTING HOLE

(ALL FRAMING STRAPS SHALL BE 2" x 1/2" x REQUIRED LENGTH)

GENERAL NOTES:

1. STYLE OF FRAMING IS OPTIONAL. ALTERNATE DESIGNS ARE ACCEPTABLE UPON APPROVAL OF THE ENGINEER. FRAME SHALL BE DESIGNED SO AS TO HOLD THE ASSEMBLY IN A FIXED, RIGID POSITION.
2. FRAMING STRAPS SHALL BE GALVANIZED STEEL OR ALUMINUM.
3. STEEL SHALL BE A.S.T.M. DESIGNATION A-283, GRADE D, GALVANIZED IN ACCORDANCE WITH A.S.T.M. DESIGNATION A-123.
4. ALUMINUM SHALL BE ALLOY 6061-T6.
5. BOLTS, NUTS, WASHERS, AND SPACERS SHALL CONFORM TO THE STANDARD SPECIFICATIONS AND/OR SPECIAL PROVISIONS.
6. FRAMING STRAPS ON A DUAL POST ERECTION SHALL NOT BE BOLTED TO THE POST.

DATE	REVISIONS
3/31/00	CHANGED U-CHANNEL POST TO SQUARE TUBE POST

GEORGIA DEPARTMENT OF TRANSPORTATION

OFFICE OF TRAFFIC OPERATIONS

NO SCALE — JANUARY 2000

DETAILS FOR TYPICAL FRAMING

T-02

STATE	PROJECT NUMBER	SHEET NO.	TOTAL SHEETS
GA.			

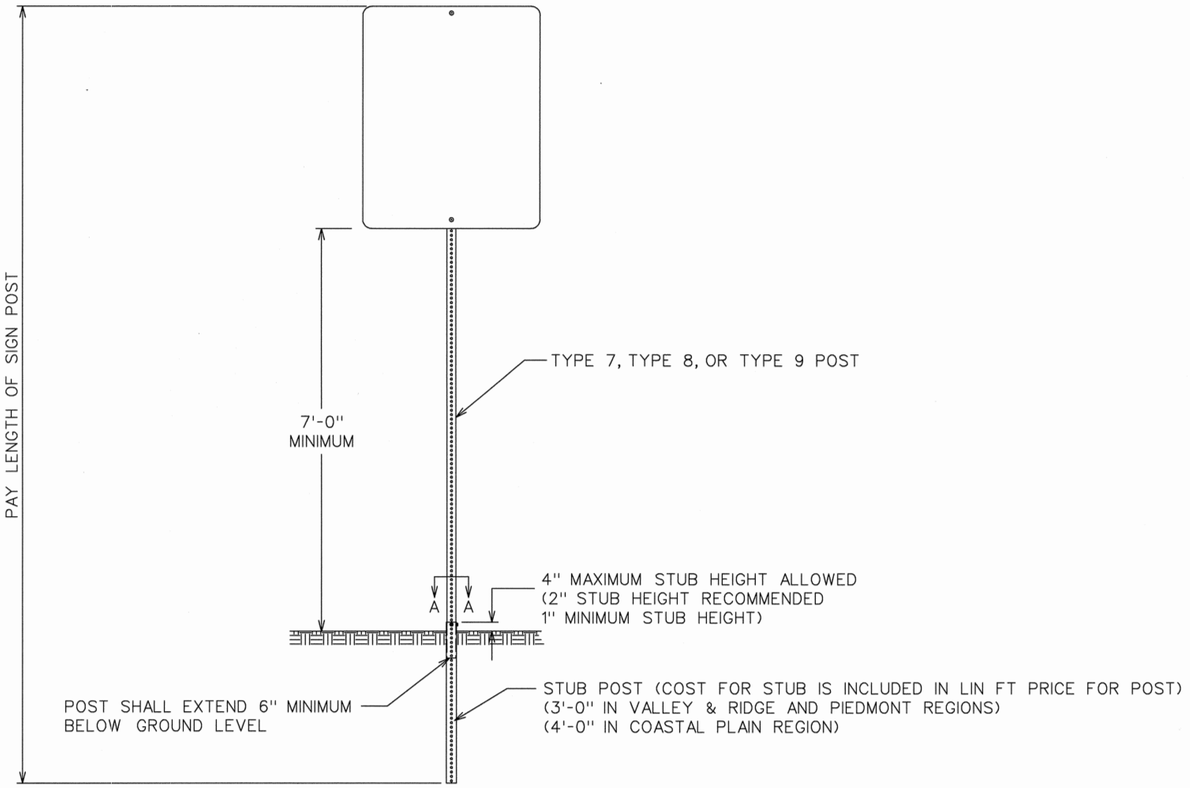

FRONT VIEW

POST	STUB SIZE
TYPE 7	2¼" x 2¼"
TYPE 8	2¾" x 2¾"
TYPE 9	2½" x 2½"

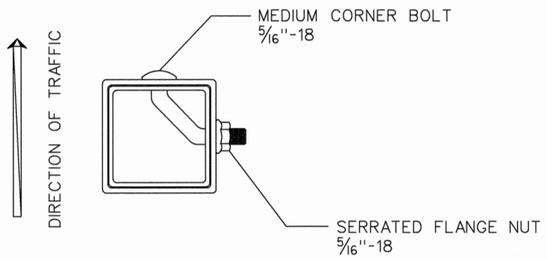

SECTION A-A

SIGN POST SELECTION CHART

70 MPH Wind Load Chart + 15% Gust Factor

	SLIP BASE NOT REQUIRED				GROUND MOUNTED BREAKAWAY SIGN SUPPORT REQUIRED				
	TYPE 7 2" 14 ga.		TYPE 9 2-1/4" 14 ga	TYPE 8 2-1/2" 12 ga.	TYPE 8 2-1/2" 12 ga.		TYPE 8 w/TYPE 9 Insert* 2-1/2" 12 ga. W/2-1/4" 14 ga.		
Sign Centroid	1 Post	2 Post	1 Post	1 Post	2 Post	3 Post	1 Post	2 Post	3 Post
	SQUARE FOOTAGE				SQUARE FOOTAGE				
6'	13.50	27.00	19.25	30.00	60.00	90.00	49.25	98.50	147.75
7'	11.60	23.20	16.50	25.75	51.50	77.25	42.25	84.50	126.75
8'	10.15	20.30	14.45	22.55	45.10	67.65	37.00	74.00	111.00
9'	9.00	18.00	12.85	20.00	40.00	60.00	32.85	65.70	98.55
10'	8.10	16.20	11.55	18.00	36.00	54.00	29.55	59.10	88.65
11'	7.40	14.80	10.50	16.40	32.80	49.20	26.90	53.80	80.70
12'	6.80	13.60	9.65	15.00	30.00	45.00	24.65	49.30	73.95
13'	6.25	12.50	8.90	13.85	27.70	41.55	22.75	45.50	68.25
14'	5.80	11.60	8.25	12.90	25.80	38.70	21.15	42.30	63.45
15'	5.00	10.00	6.45	10.10	20.20	30.30	16.55	33.10	49.65
16'	4.70	9.40	6.05	9.45	18.90	28.35	15.50	31.00	46.50
17'	4.40	8.80	5.70	8.90	17.80	26.70	14.60	29.20	43.80
18'	4.15	8.30	5.40	8.40	16.80	25.20	13.80	27.60	41.40
19'	3.95	7.90	5.10	7.95	15.90	23.85	13.05	26.10	39.15
20'	3.75	7.50	4.85	7.55	15.10	22.65	12.40	24.80	37.20

SIGN CENTROID IS DISTANCE FROM GROUND LEVEL TO BOTTOM OF SIGN *PLUS* HALF THE HEIGHT OF SIGN.
EXAMPLE: 24" X 48" SIGN THAT IS 7 FEET FROM GROUND TO BOTTOM OF SIGN. ADD HALF OF 48" (24" OR 2 FT) *PLUS* 7 FT. = 9' CENTROID.

SIGN PLATE SHALL NOT EXCEED 48" IN WIDTH ON A SINGLE POST.

* TYPE 9 INSERT SHALL BE A CONTINOUS POST INSERTED INTO THE TYPE 8 POST WHERE REQUIRED. THE INSERT POST SHALL EXTEND FROM THE BOTTOM OF THE SLIP BASE UPPER ASSEMBLY TO 4" BELOW THE BOTTOM OF THE SIGN. THE INSERT POST SHALL NOT EXTEND ABOVE THE BOTTOM OF THE SIGN. PAYMENT FOR THE INSERT POST SHALL BE PER LINEAR FOOT OF TYPE 9 POST.

GROUND MOUNTED BREAKAWAY SIGN SUPPORT WILL BE MEASURED AND PAID FOR SEPARATELY. THE COST FOR THIS WORK SHALL INCLUDE THE UPPER AND LOWER ASSEMBLY, STUB POST, CLASS "A" CONCRETE, ALL HARDWARE NECESSARY TO COMPLETE THE INSTALLATION, AND BE INCLUDED IN THE BID PRICE SUBMITTED FOR ITEM 636-3010.

DATE	REVISIONS

GEORGIA DEPARTMENT OF TRANSPORTATION
OFFICE OF TRAFFIC SAFETY & DESIGN

NO SCALE — JULY 2002

TYPE 7, 8, AND 9
SQUARE TUBE POST
INSTALLATION DETAIL

T-03A

STATE	PROJECT NUMBER	SHEET NO.	TOTAL SHEETS
GA.			

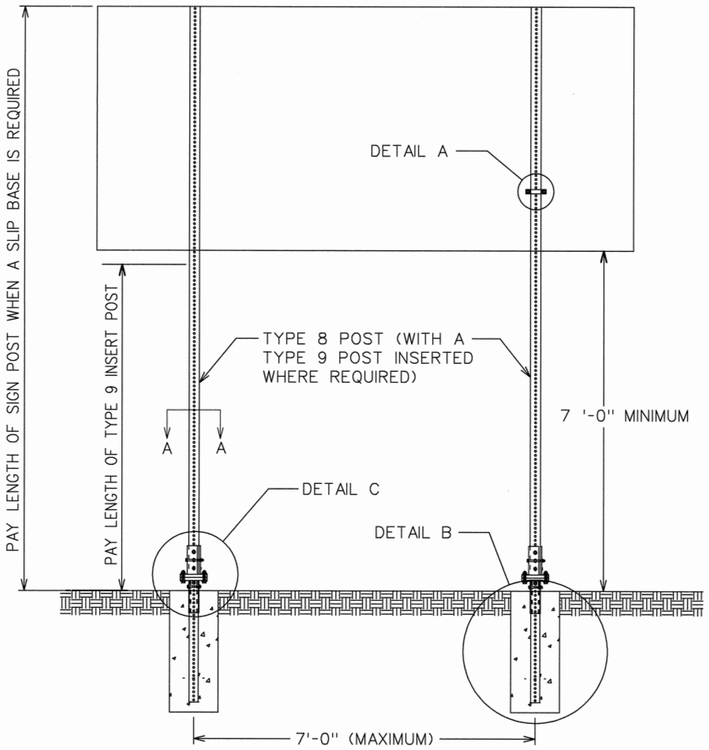

BACK VIEW

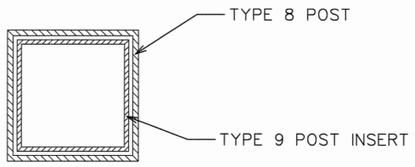

SECTION A-A

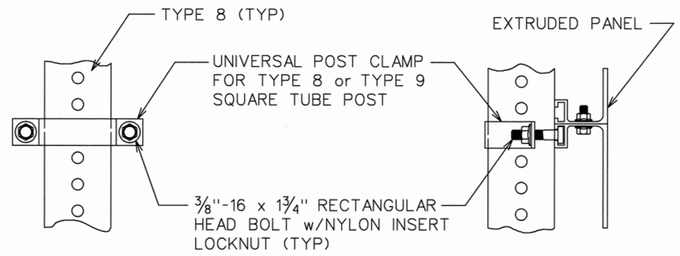

BACK VIEW SIDE VIEW

DETAIL A

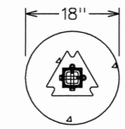

TOP VIEW

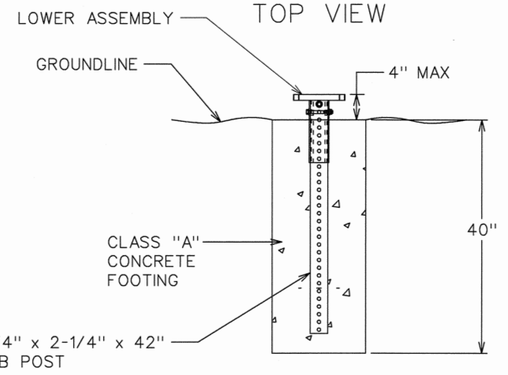

DETAIL B

GROUND MOUNTED BREAKAWAY SIGN SUPPORT

SIGN POST SELECTION CHART

70 MPH Wind Load Chart + 15% Gust Factor

	SLIP BASE NOT REQUIRED				GROUND MOUNTED BREAKAWAY SIGN SUPPORT REQUIRED				
	TYPE 7 2" 14 ga.		TYPE 9 2-1/4" 14 ga.	TYPE 8 2-1/2" 12 ga.	TYPE 8 2-1/2" 12 ga.		TYPE 8 w/TYPE 9 Insert* 2-1/2" 12 ga. W/2-1/4" 14 ga.		
Sign Centroid	1 Post	2 Post	1 Post	1 Post	2 Post	3 Post	1 Post	2 Post	3 Post
	SQUARE FOOTAGE				SQUARE FOOTAGE				
6'	13.50	27.00	19.25	30.00	60.00	90.00	49.25	98.50	147.75
7'	11.60	23.20	16.50	25.75	51.50	77.25	42.25	84.50	126.75
8'	10.15	20.30	14.45	22.55	45.10	67.65	37.00	74.00	111.00
9'	9.00	18.00	12.85	20.00	40.00	60.00	32.85	65.70	98.55
10'	8.10	16.20	11.55	18.00	36.00	54.00	29.55	59.10	88.65
11'	7.40	14.80	10.50	16.40	32.80	49.20	26.90	53.80	80.70
12'	6.80	13.60	9.65	15.00	30.00	45.00	24.65	49.30	73.95
13'	6.25	12.50	8.90	13.85	27.70	41.55	22.75	45.50	68.25
14'	5.80	11.60	8.25	12.90	25.80	38.70	21.15	42.30	63.45
15'	5.00	10.00	6.45	10.10	20.20	30.30	16.55	33.10	49.65
16'	4.70	9.40	6.05	9.45	18.90	28.35	15.50	31.00	46.50
17'	4.40	8.80	5.70	8.90	17.80	26.70	14.60	29.20	43.80
18'	4.15	8.30	5.40	8.40	16.80	25.20	13.80	27.60	41.40
19'	3.95	7.90	5.10	7.95	15.90	23.85	13.05	26.10	39.15
20'	3.75	7.50	4.85	7.55	15.10	22.65	12.40	24.80	37.20

SIGN CENTROID IS DISTANCE FROM GROUND LEVEL TO BOTTOM OF SIGN *PLUS* HALF THE HEIGHT OF SIGN.
EXAMPLE: 24" X 48" SIGN THAT IS 7 FEET FROM GROUND TO BOTTOM OF SIGN. ADD HALF OF 48" (24" OR 2 FT) *PLUS* 7 FT. = 9' CENTROID.

SIGN PLATE SHALL NOT EXCEED 48" IN WIDTH ON A SINGLE POST.

* TYPE 9 INSERT SHALL BE A CONTINOUS POST INSERTED INTO THE TYPE 8 POST WHERE REQUIRED. THE INSERT POST SHALL EXTEND FROM THE BOTTOM OF THE SLIP BASE UPPER ASSEMBLY TO 4" BELOW THE BOTTOM OF THE SIGN. THE INSERT POST SHALL NOT EXTEND ABOVE THE BOTTOM OF THE SIGN. PAYMENT FOR THE INSERT POST SHALL BE PER LINEAR FOOT OF TYPE 9 POST.

GROUND MOUNTED BREAKAWAY SIGN SUPPORT WILL BE MEASURED AND PAID FOR SEPARATELY. THE COST FOR THIS WORK SHALL INCLUDE THE UPPER AND LOWER ASSEMBLY, STUB POST, CLASS "A" CONCRETE, ALL HARDWARE NECESSARY TO COMPLETE THE INSTALLATION, AND BE INCLUDED IN THE BID PRICE SUBMITTED FOR ITEM 636-3010.

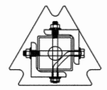

TOP VIEW

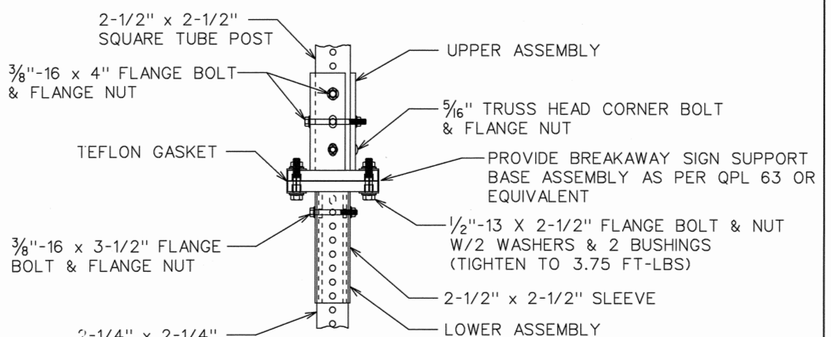

DETAIL C

(CONCRETE NOT SHOWN)

DATE	REVISIONS

GEORGIA DEPARTMENT OF TRANSPORTATION

OFFICE OF TRAFFIC SAFETY & DESIGN

NO SCALE — July 2002

DETAILS OF SQUARE TUBE POST (BREAKAWAY SIGN SUPPORT)

T-03B

STATE	PROJECT NUMBER	SHEET NO.	TOTAL SHEETS
GA.			

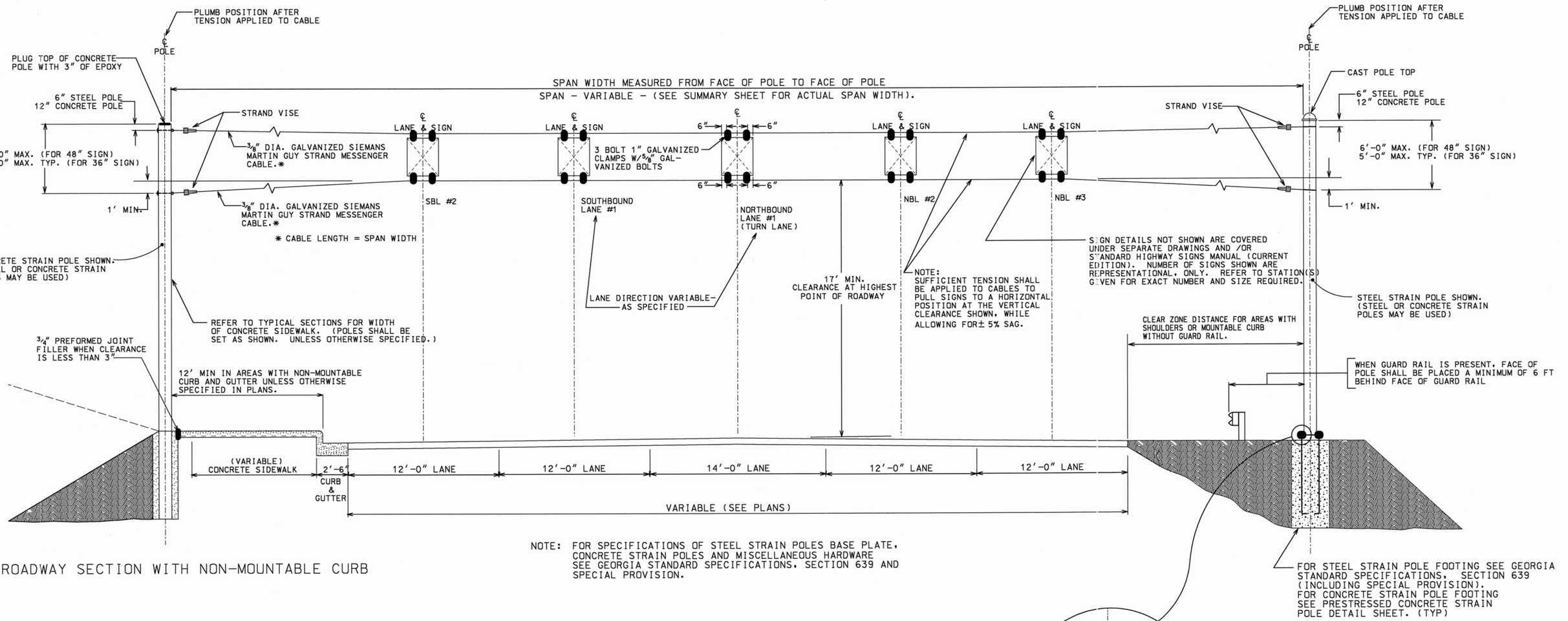

ROADWAY SECTION WITH NON-MOUNTABLE CURB

ROADWAY SECTION WITHOUT CURB

NOTE: FOR SPECIFICATIONS OF STEEL STRAIN POLES BASE PLATE, CONCRETE STRAIN POLES AND MISCELLANEOUS HARDWARE SEE GEORGIA STANDARD SPECIFICATIONS, SECTION 639 AND SPECIAL PROVISION.

CLEAR ZONE DISTANCES (IN FEET FROM EDGE OF DRIVING LANE)

DESIGN SPEED	DESIGN ADT	FILL SLOPES			CUT SLOPES		
		6:1 OR FLATTER	5:1 TO 4:1	3:1	3:1	4:1 TO 5:1	6:1 OR FLATTER
40 MPH OR LESS	UNDER 750	7-10	7-10	••	7-10	7-10	7-10
	750-1500	10-12	12-14	••	10-12	10-12	10-12
	1500-6000	12-14	14-16	••	12-14	12-14	12-14
	OVER 6000	14-16	16-18	••	14-16	14-16	14-16
45-50 MPH	UNDER 750	10-12	12-14	••	8-10	8-10	10-12
	750-1500	12-14	16-20	••	10-12	12-14	14-16
	1500-6000	16-18	20-26	••	12-14	14-16	16-18
	OVER 6000	18-20	24-28	••	14-16	18-20	20-22
55 MPH	UNDER 750	12-14	14-18	••	8-10	10-12	10-12
	750-1500	16-18	20-24	••	10-12	14-16	16-18
	1500-6000	20-22	24-30	••	14-16	16-18	20-22
	OVER 6000	22-24	26-32	••	16-18	20-22	22-24

•• POLES SHOULD NOT BE PLACED IN THE VICINITY OF THE TOP OF THESE SLOPES.

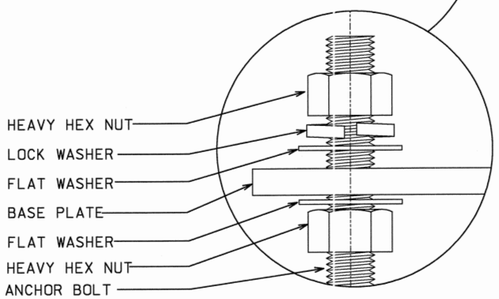

DETAIL OF ANCHOR BOLT AND HARDWARE

DATE	REVISIONS

GEORGIA DEPARTMENT OF TRANSPORTATION
OFFICE OF TRAFFIC SAFETY & DESIGN

NO SCALE — JANUARY 2000

DETAILS OF STRAIN POLE ERECTION FOR OVERHEAD SIGNS

T-03C

STATE	PROJECT NUMBER	SHEET NO.	TOTAL SHEETS
GA.			

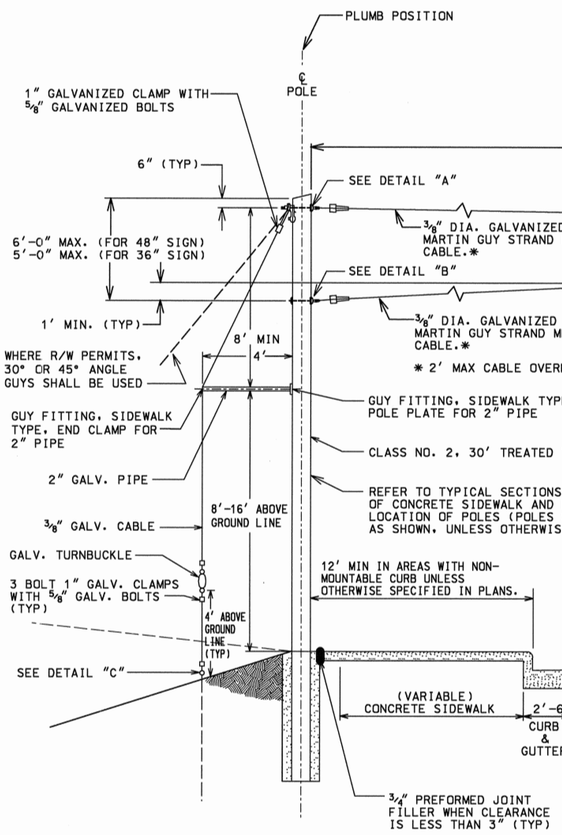

ROADWAY SECTION WITH NON-MOUNTABLE CURB

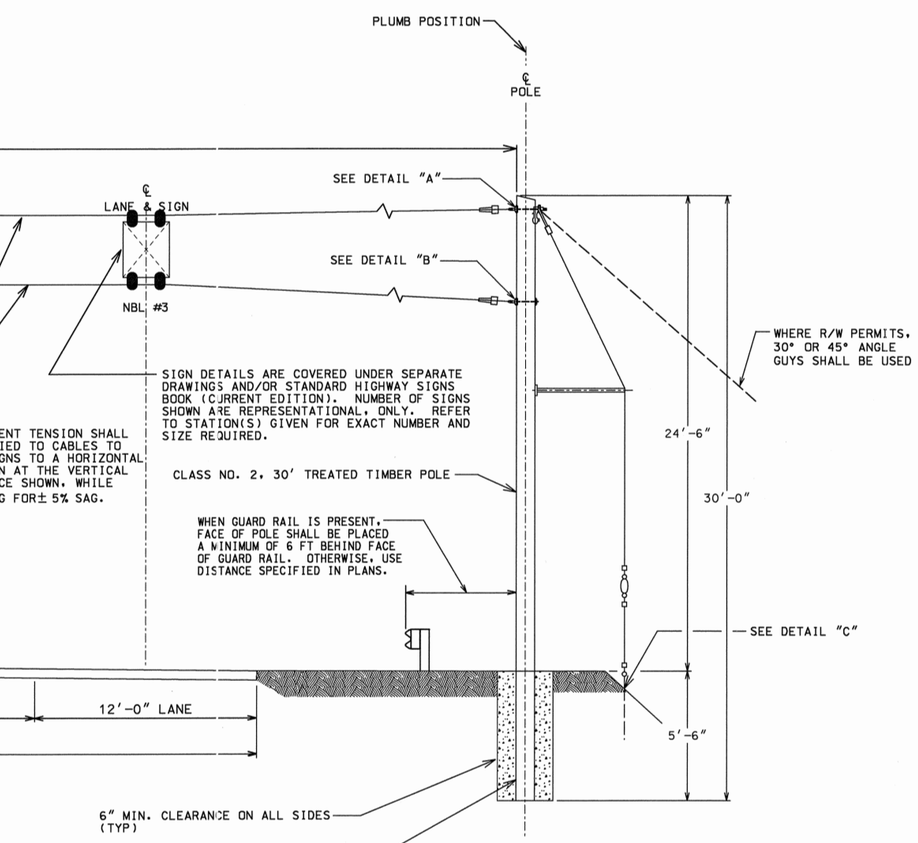

ROADWAY SECTION WITHOUT CURB

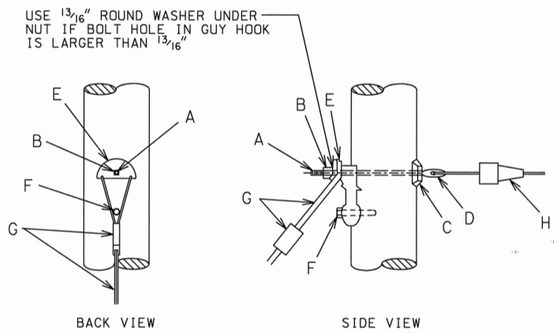

DETAIL "A"
(SEE PARTS LIST)

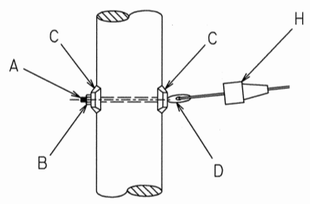

DETAIL "B"
(SEE PARTS LIST)

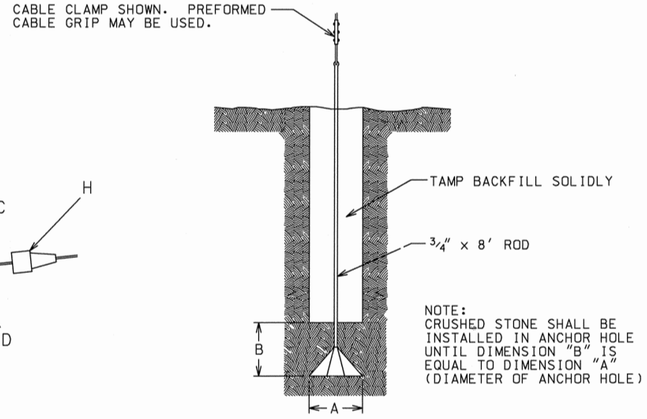

DETAIL "C"
(INSTALLATION SHOWN FOR 8" CONE TYPE GUY ANCHOR (6M). COMPARABLE SCREW TYPE (6M) MAY BE USED)

A	3/4" SPACE BOLTS
B	3/4" M F LOCKNUTS
C	4" x 4" CURVED WASHERS, 13/16" HOLE
D	3/4" THIMBLE EYE NUT
E	HEAVY DUTY GUY HOOK
F	1/2" x 4" LAG SCREW
G	3/8" GLAV. CABLE AND CLAMPS
H	STRANDVISE

NOTE: PREFORMED CABLE GRIPS MAY BE USED IN LIEU OF CABLE CLAMPS.

PARTS LIST

DATE	REVISIONS

GEORGIA DEPARTMENT OF TRANSPORTATION
OFFICE OF TRAFFIC SAFETY & DESIGN

T-03D

DETAILS OF TIMBER POLE ERECTION FOR OVERHEAD SIGNS

NO SCALE JANUARY 2000

STATE	PROJECT NUMBER	SHEET NO.	TOTAL SHEETS
GA.			

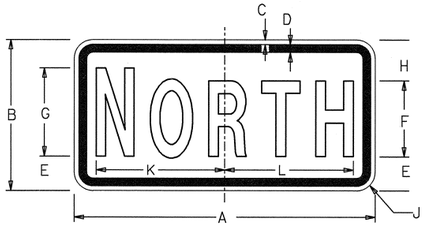

M3-1

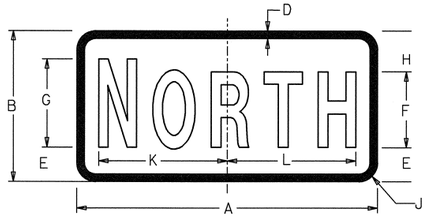

MB3-1 & MG3-1

DIMENSIONS (INCHES)											
SIGN	A	B	C	D	E	F	G	H	J	K	L
BIKE	12	4	-	1/4	1	2D	2 1/4 D	1	3/4	4 1/4	4 1/4
MIN & STD	24	12	3/8	5/8	2 3/4	6C	7C	3 1/4	1 1/2	10 1/4	10 1/4
SPECIAL	30	15	3/8	5/8	3 1/4	8C	9C	3 3/4	1 1/2	12 11/16	12 11/16

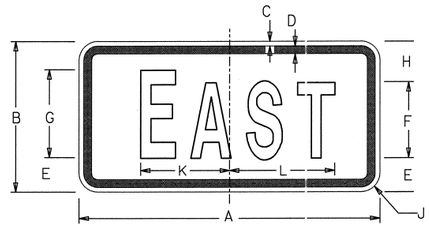

M3-2

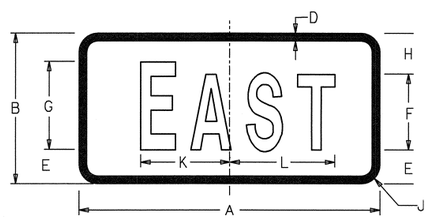

MB3-2 & MG3-2

DIMENSIONS (INCHES)											
SIGN	A	B	C	D	E	F	G	H	J	K	L
BIKE	12	4	-	1/4	1	2D	2 1/4 D	1	3/4	3 3/8	3 3/8
MIN & STD	24	12	3/8	5/8	2 3/4	6C	7C	3 1/4	1 1/2	7 7/8	8 3/4
SPECIAL	30	15	3/8	5/8	3 1/4	8C	9C	3 3/4	1 1/2	10 3/8	11 1/8

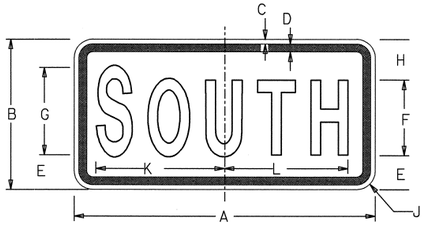

M3-3

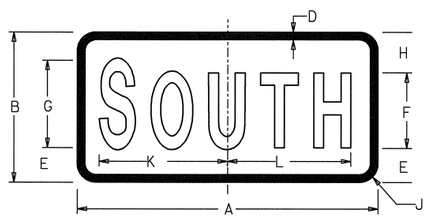

MB3-3 & MG3-3

DIMENSIONS (INCHES)											
SIGN	A	B	C	D	E	F	G	H	J	K	L
BIKE	12	4	-	1/4	1	2D	2 1/4 D	1	3/4	4 1/4	4 1/4
MIN & STD	24	12	3/8	5/8	2 3/4	6C	7C	3 1/4	1 1/2	10 1/4	9 11/16
SPECIAL	30	15	3/8	5/8	3 1/4	8C	9C	3 3/4	1 1/2	12 11/16	12 1/2

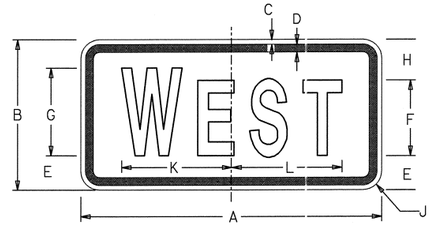

M3-4

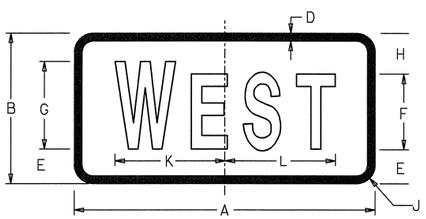

MB3-4 & MG3-4

DIMENSIONS (INCHES)											
SIGN	A	B	C	D	E	F	G	H	J	K	L
BIKE	12	4	-	1/4	1	2D	2 1/4 D	1	3/4	3 1/2	3 1/2
MIN & STD	24	12	3/8	5/8	2 3/4	6C	7C	3 1/4	1 1/2	8 3/4	8 3/4
SPECIAL	30	15	3/8	5/8	3 1/4	8C	9C	3 3/4	1 1/2	10 3/8	11 1/8

GENERAL NOTES:

1. M3 (CONVENTIONAL ROADWAYS) SIGNS SHALL HAVE BLACK LEGENDS AND BORDERS ON WHITE REFLECTORIZED BACKGROUNDS.

2. MB3 (INTERSTATE HIGHWAYS) SIGNS SHALL HAVE WHITE REFLECTORIZED LEGENDS AND BORDERS ON BLUE REFLECTORIZED BACKGROUNDS.

3. MG3 (BIKE LANES) SIGNS SHALL HAVE WHITE REFLECTORIZED LEGENDS AND BORDERS ON GREEN REFLECTORIZED BACKGROUNDS.

DATE	REVISIONS

GEORGIA DEPARTMENT OF TRANSPORTATION
OFFICE OF TRAFFIC SAFETY & DESIGN

T-04

DETAILS OF
CARDINAL DIRECTION SIGNS

NO SCALE JANUARY 2000

STATE	PROJECT NUMBER	SHEET NO.	TOTAL SHEETS
GA.			

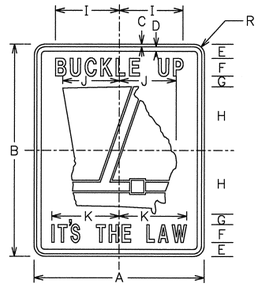

R560-1

SIGN	DIMENSIONS (INCHES)										
	A	B	C	D	E	F	G	H	I	J	K	R
MIN & STD	30	36	1/2	3/4	2 1/2	3C	1 1/2	11	8 1/2	10	11	1 7/8
FWY	48	60	3/4	1 1/4	4	5C	3	18	15 1/2	16	18	3

COLORS

STATE SHIELD & BORDER – RED (REFL)
LEGEND & BELT – BLACK (NON-REFL)
BACKGROUND – WHITE (REFL)

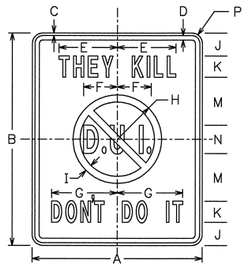

R560-2

SIGN	DIMENSIONS (INCHES)														
	A	B	C	D	E	F	G	H	I	J	K	L	M	N	P
MIN & STD	30	36	1/2	3/4	11	5	12 1/2	7 1/2	1 1/4	4	4C	3	4 1/2	5C	1 7/8
FWY	48	60	3/4	1 1/4	16 1/2	9 1/2	18 1/2	12 1/2	2	6 1/2	6C	5	8 1/2	8C	3

COLORS

CIRCLE & DIAGONAL – RED (REFL)
LEGEND & BORDER – BLACK (NON-REFL)
BACKGROUND – WHITE (REFL)

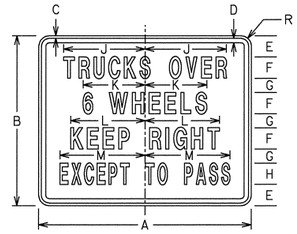

R560-3

SIGN	DIMENSIONS (INCHES)												
	A	B	C	D	E	F	G	H	J	K	L	M	R
MIN & STD	36	30	1/2	3/4	3 1/2	3 1/2 C	3	3 1/2 B	14	10	11 1/2	14 1/2	1 7/8
FWY	60	48	3/4	1 1/4	6	6C	4	6B	23	17 1/2	21	24	3

COLORS

LEGEND & BORDER – BLACK (NON-REFL)
BACKGROUND – WHITE -(REFL)

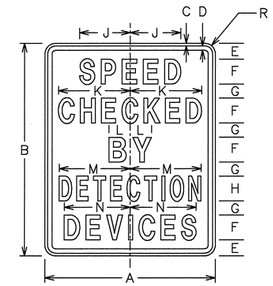

I550-1

SIGN	DIMENSIONS (INCHES)												
	A	B	C	D	E	F	G	H	J	K	L	M	N	R
MIN & STD	30	36	1/2	3/4	4	4D	2	4C	8 3/16	11 9/16	3 1/16	11 7/16	10 5/8	1 7/8
FWY	48	60	3/4	1 1/4	4 1/2	7D	4	7C	14 5/16	20 3/16	6	20	18 3/16	3

COLORS

LEGEND & BORDER – BLACK (NON-REFL)
BACKGROUND – WHITE (REFL)

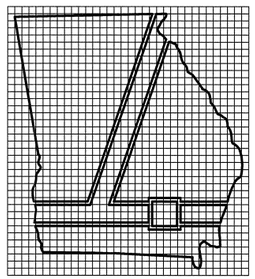

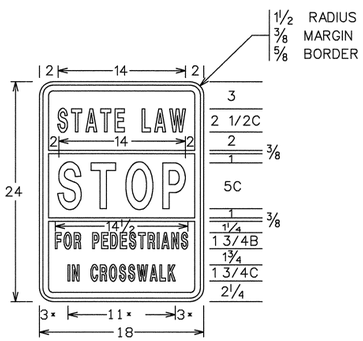

R560-5

COLORS

LEGEND & BORDER–BLACK (NON-REFL)
WORD "STOP" –RED (REFL)
BACKGROUND –WHITE (REFL)

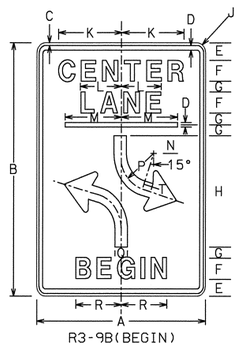

R3-9B(BEGIN)



R3-9B(END)

SIGN	DIMENSIONS (INCHES)																		
	A	B	C	D	E	F	G	H	J	K	L	M	N	P	Q	R	S	T
STD & MIN	24	36	3/8	5/8	2 1/2	3E	1 1/2	16	1 1/2	8 7/16	5 3/4	8	2 1/2	6	2	6 7/16	4 3/16	1 1/2
SPECIAL	36	48	5/8	7/8	3 1/2	5E	1 1/2	20	2 1/4	14 1/16	9 1/2	12	3	8	3	7 11/16	4 15/16	2

COLORS

LEGEND & BORDER – BLACK (NON-REFL)
BACKGROUND –WHITE (REFL)

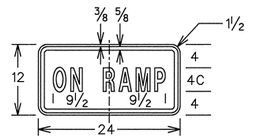

R8-3aP

COLORS

LEGEND & BORDER - RED (REFL)
BACKGROUND - WHITE (REFL)

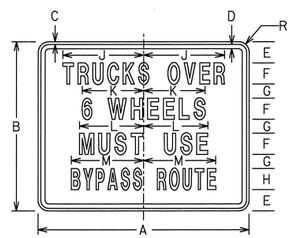

R560-4

SIGN	DIMENSIONS (INCHES)												
	A	B	C	D	E	F	G	H	J	K	L	M	R
MIN & STD	36	30	1/2	3/4	3 1/2	3 1/2 C	3	3 1/2 B	14	10	10	12 1/2	1 7/8
FWY	60	48	3/4	1 1/4	6	6C	4	6C	23	17 1/2	17 1/2	25 1/2	3

COLORS

LEGEND & BORDER – BLACK (NON-REFL)
BACKGROUND –WHITE (REFL)

THE I550-1 SIGN SHALL BE ERECTED:

1. ON EVERY HIGHWAY THAT COMPRISES A PART OF THE STATE HIGHWAY SYSTEM AT THAT POINT ON THE HIGHWAY WHICH INTERSECTS THE STATE LINE,
2. AT THE TERMINI OF EVERY HIGHWAY THAT COMPRISES A PART OF THE STATE HIGHWAY SYSTEM WHICH BEGINS OR ENDS WITHIN THE STATE BOUNDARIES,
3. ON EVERY HIGHWAY THAT COMPRISES A PART OF THE STATE HIGHWAY SYSTEM AT THAT POINT ON THE HIGHWAY WHERE TRAFFIC FROM OUTSIDE THE COUNTY FIRST ENTERS A COUNTY THAT HAS A PERMIT TO OPERATE SPEED DETERCTION DEVICES, AND
4. ON EVERY HIGHWAY THAT COMPRISES A PART OF THE STATE HIGHWAY SYSTEM AT THAT POINT ON THE HIGHWAY WHERE TRAFFIC FIRST ENTERS THE CORPORATE LIMITS OF ANY MUNICIPALITY THAT HAS A PERMIT TO OPERATE SPEED DETECTION DEVICES.

DATE	REVISIONS
5-24-00	ADDED R9-8 DETAIL
1-21-03	DELETED R1-4 SIGNS
1-21-03	REV SIGN CODES FOR R3-9 SIGNS

GEORGIA DEPARTMENT OF TRANSPORTATION
OFFICE OF TRAFFIC SAFETY & DESIGN

DETAILS OF REGULATORY SIGNS
SHEET 1 OF 2

T-05A

NO SCALE JANUARY 2000

STATE	PROJECT NUMBER	SHEET NO.	TOTAL SHEETS
GA.			

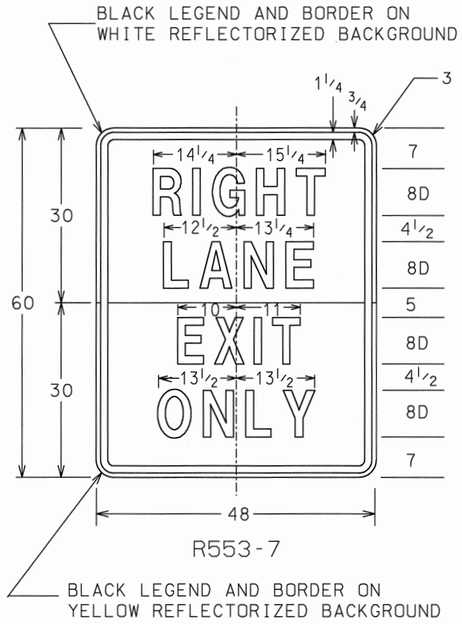

R553-7

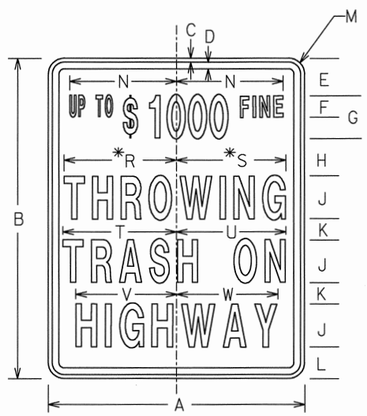

R553-1

* REDUCE SPACING 20%

SIGN	DIMENSIONS (INCHES)																		
	A	B	C	D	E	F	G	H	J	K	L	M	N	R	S	T	U	V	W
STD & MIN	24	30	3/8	5/8	3 1/2	2B	4C	3 1/2	4C	2	3	1 1/2	10	10 1/2	10 1/4	10 3/4	10 1/8	9 3/8	9 1/2
EXPWY	36	48	5/8	7/8	6	3B	6C	6	6C	3	6	2 1/4	15	15 3/4	15 3/8	16 1/8	15 3/16	14 1/16	14 1/4
FWY	48	60	3/4	1 1/4	7	4B	7C	8	8C	4	6	3	20	21	20 1/2	21 1/2	20 1/4	18 3/4	19

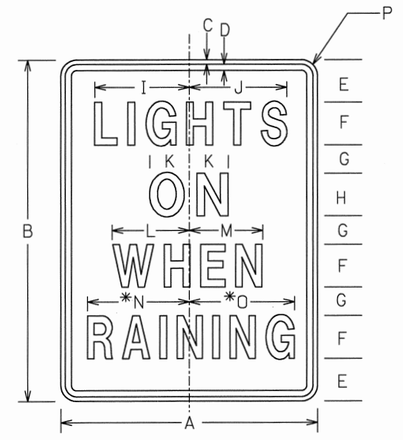

R554-1

* REDUCE SPACING 30%

SIGN	DIMENSIONS (INCHES)														
	A	B	C	D	E	F	G	H	I	J	K	L	M	N	O	P
STD & MIN	24	30	3/8	5/8	3 5/8	4D	2 1/4	4E	8 3/4	9 1/4	4	6 3/4	7 1/4	9 1/4	9 3/4	1 1/2
EXPWY	36	48	5/8	7/8	6	6D	4	6E	13 1/4	13 3/4	5 1/2	10 3/4	10 1/4	14 1/4	14 3/4	2 1/4
FWY	48	60	3/4	1 1/4	7 1/4	8D	4 1/2	8E	17 1/8	17 7/8	7	14 3/8	13 5/8	18 5/8	19 3/8	3

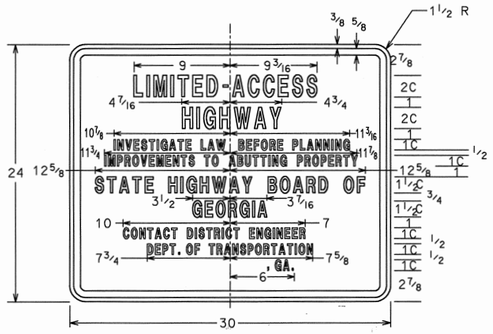

R552-1



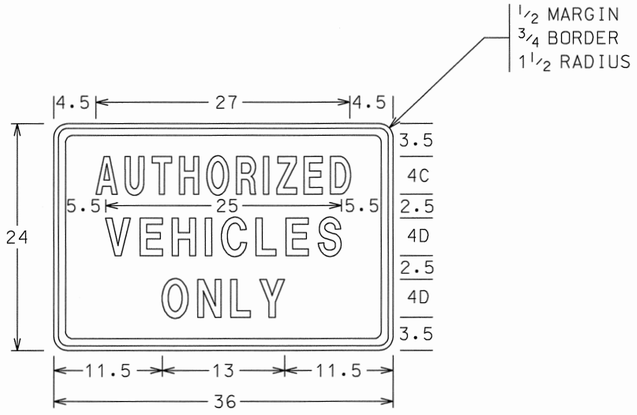

R552-2

DATE	REVISIONS

GEORGIA DEPARTMENT OF TRANSPORTATION
OFFICE OF TRAFFIC SAFETY & DESIGN

DETAILS OF REGULATORY SIGNS
SHEET 2 OF 2

T-05B

NO SCALE

JANUARY 2000

STATE	PROJECT NUMBER	SHEET NO.	TOTAL SHEETS
GA.			

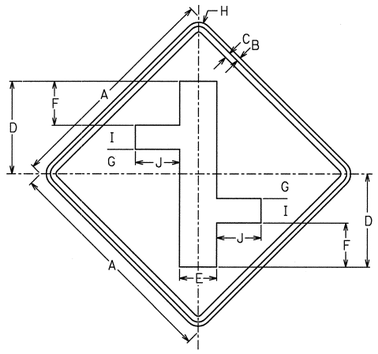

W552-1

SIGN	DIMENSIONS (INCHES)									
	A	B	C	D	E	F	G	H	I	J
STD & MIN	30	1/2	3/4	12 1/2	5	6	3 1/4	1 7/8	3 1/4	6
EXPWY	36	5/8	7/8	15	6	7	4	2 1/4	4	7
FWY	48	7/8	1 1/4	20	8	9 1/2	5 1/4	3	5 1/4	9 1/2

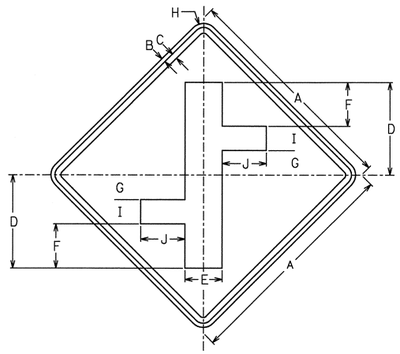

W552-2

SIGN	DIMENSIONS (INCHES)									
	A	B	C	D	E	F	G	H	I	J
STD & MIN	30	1/2	3/4	12 1/2	5	6	3 1/4	1 7/8	3 1/4	6
EXPWY	36	5/8	7/8	15	6	7	4	2 1/4	4	7
FWY	48	7/8	1 1/4	20	8	9 1/2	5 1/4	3	5 1/4	9 1/2

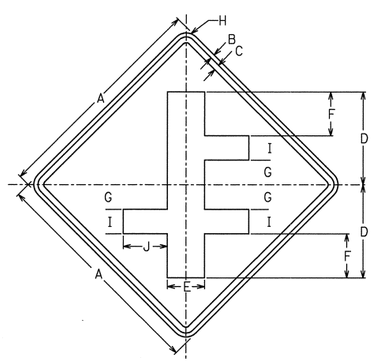

W552-3

SIGN	DIMENSIONS (INCHES)									
	A	B	C	D	E	F	G	H	I	J
STD & MIN	30	1/2	3/4	12 1/2	5	6	3 1/4	1 7/8	3 1/4	6
EXPWY	36	5/8	7/8	15	6	7	4	2 1/4	4	7
FWY	48	7/8	1 1/4	20	8	9 1/2	5 1/4	3	5 1/4	9 1/2

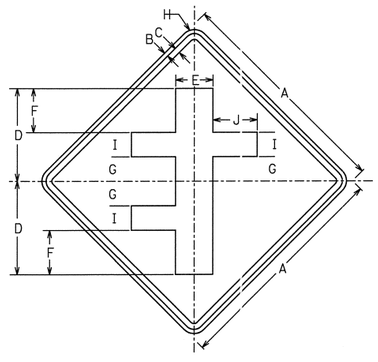

W552-4

SIGN	DIMENSIONS (INCHES)									
	A	B	C	D	E	F	G	H	I	J
STD & MIN	30	1/2	3/4	12 1/2	5	6	3 1/4	1 7/8	3 1/4	6
EXPWY	36	5/8	7/8	15	6	7	4	2 1/4	4	7
FWY	48	7/8	1 1/4	20	8	9 1/2	5 1/4	3	5 1/4	9 1/2

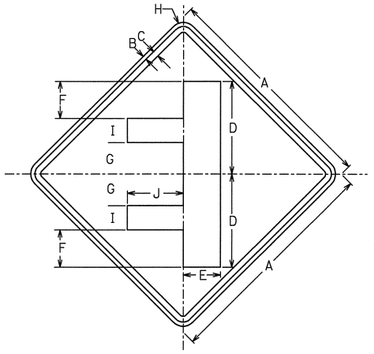

W552-5

SIGN	DIMENSIONS (INCHES)									
	A	B	C	D	E	F	G	H	I	J
STD & MIN	30	1/2	3/4	12 1/2	5	5	4 1/4	1 7/8	3 1/4	8
EXPWY	36	5/8	7/8	15	6	6	5	2 1/4	4	10
FWY	48	7/8	1 1/4	20	8	8	6 3/4	3	5 1/4	12

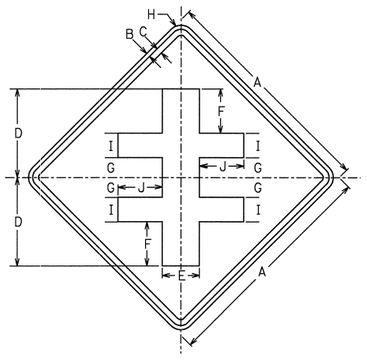

W552-6

SIGN	DIMENSIONS (INCHES)								
	A	B	C	D	E	F	G	H	I	J
STD & MIN	30	1/2	3/4	12 1/2	5	5	3 1/4	1 7/8	3 1/4	6
EXPWY	36	5/8	7/8	15	6	7	4	2 1/4	4	7
FWY	48	7/8	1 1/4	20	8	9 1/2	5 1/4	3	5 1/4	9 1/2

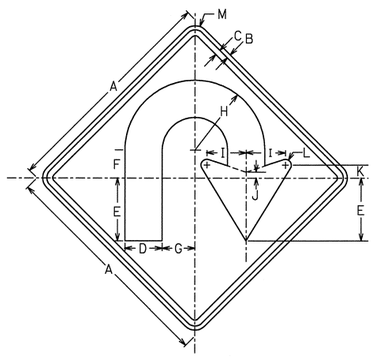

W551-1

SIGN	DIMENSIONS (INCHES)												
	A	B	C	D	E	F	G	H	I	J	K	L	M
STD & MIN	30	1/2	3/4	5	8 1/2	3 3/4	4 3/8	9 3/8	5 3/4	3/4	1 5/8	3/4	1 7/8
EXPWY	36	5/8	7/8	6	10	4 1/2	5 1/4	11 1/4	6 7/8	15/16	2 3/16	15/16	2 1/4
FWY	48	7/8	1 1/4	8	13 1/2	6	7	15	8 7/16	1 1/4	2 3/4	1 1/4	3

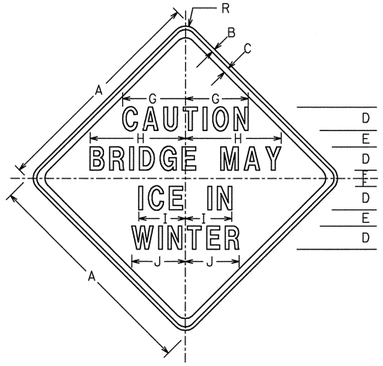

W560-1

SIGN	DIMENSIONS (INCHES)										
	A	B	C	D	E	F	G	H	I	J	R
MIN & STD	30	1/2	3/4	3D	2 3/16	1 3/32	8	12 1/2	6	7	1 7/8
EXPWY	36	5/8	7/8	4D	2 5/8	1 5/16	11	16 1/2	8	9	2 1/4
FWY	48	3/4	1 1/4	5D	3 1/2	1 3/4	13 1/2	20 1/2	10	11 1/2	3

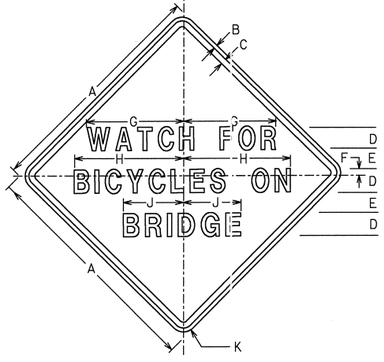

W560-2

SIGN	DIMENSIONS (INCHES)									
	A	B	C	D	E	F	G	H	J	K
MIN & STD	30	1/2	3/4	3C	1 1/2	1 3/32	9 1/2	11 1/2	6	1 7/8
EXPWY	36	5/8	7/8	4C	3 1/4	2	13	15	7 1/2	2 1/4

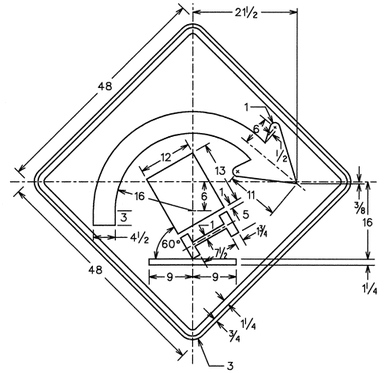

W560-3

SIGNS SHALL HAVE YELLOW REFLECTORIZED BACKGROUNDS WITH BLACK LEGENDS, BORDERS, AND SYMBOLS.

DATE	REVISIONS

GEORGIA DEPARTMENT OF TRANSPORTATION
OFFICE OF TRAFFIC SAFETY & DESIGN

T-05C

DETAILS OF
WARNING SIGNS

NO SCALE

JANUARY 2000

STATE	PROJECT NUMBER	SHEET NO.	TOTAL SHEETS
GA.			

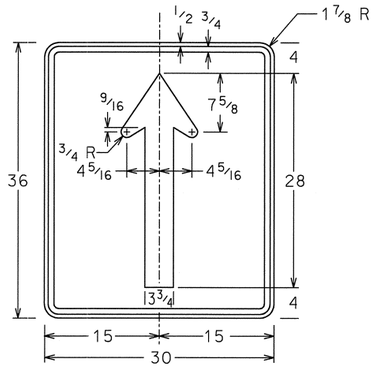

R3-5Ta

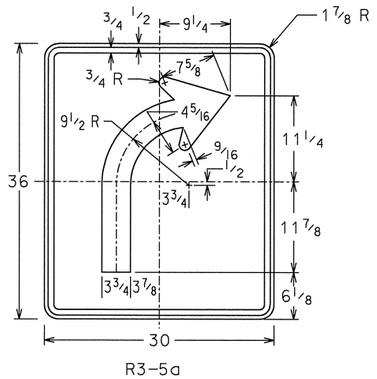

R3-5a

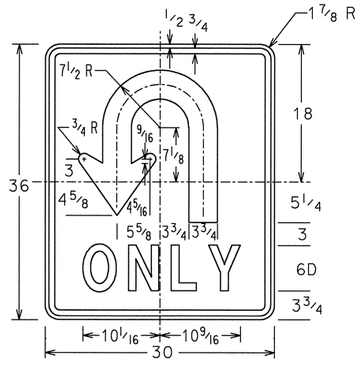

R553-5

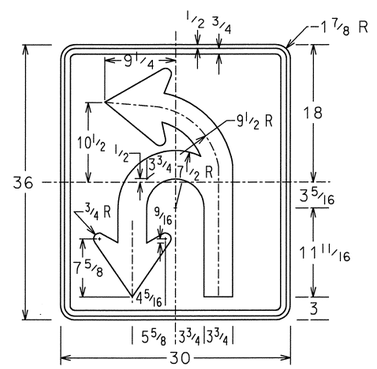

R553-6

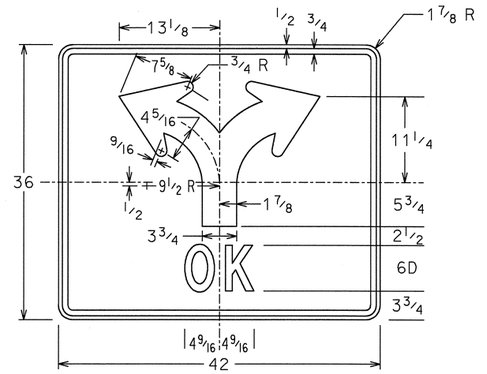

R553-8

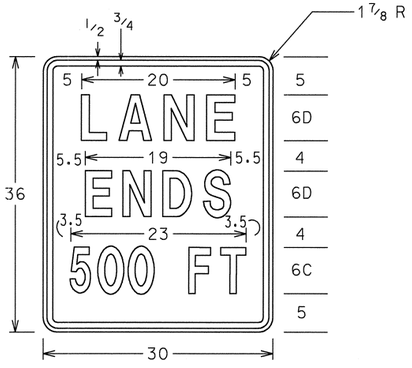

W559-1

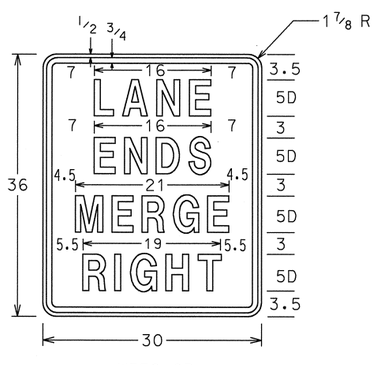

W559-2R

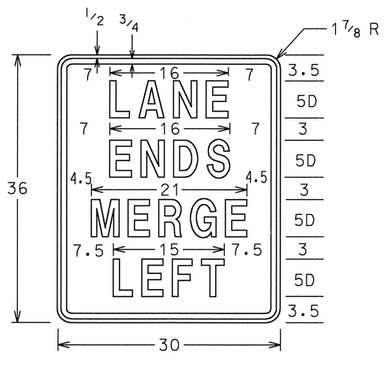

W559-2L

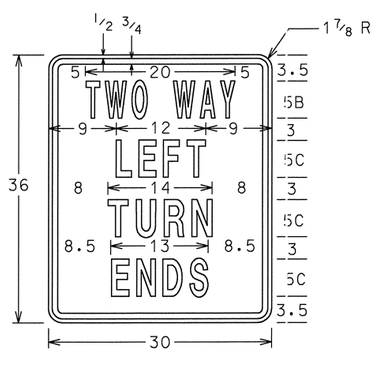

W553-9

GENERAL NOTES:

1. R SIGNS SHALL HAVE WHITE REFLECTORIZED BACKGROUNDS WITH BLACK LEGENDS, BORDERS, AND SYMBOLS.
2. W SIGNS SHALL HAVE YELLOW REFLECTORIZED BACKGROUNDS WITH BLACK LEGENDS AND BORDERS.
3. ALL DIMENSIONS ARE IN INCHES.

DATE	REVISIONS

GEORGIA DEPARTMENT OF TRANSPORTATION
OFFICE OF TRAFFIC SAFETY & DESIGN

T-06

DETAILS OF
OVERHEAD SIGNS

NO SCALE

JANUARY 2000

STATE	PROJECT NUMBER	SHEET NO.	TOTAL SHEETS
GA.			

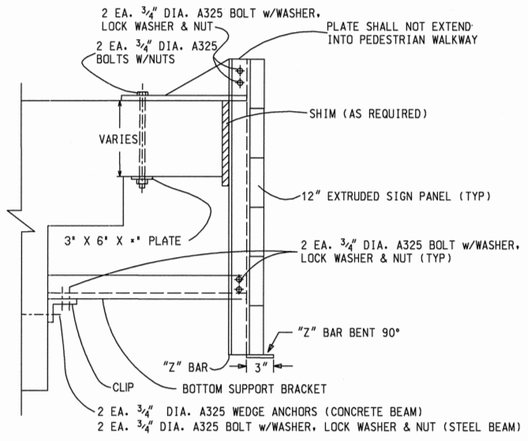

DECK OVERHANG ATTACHMENT DETAIL

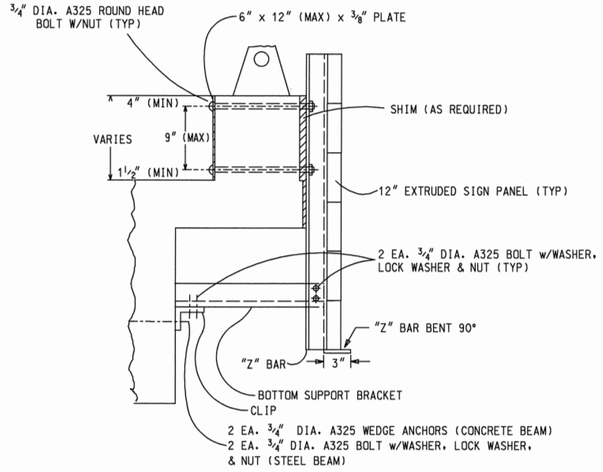

PARAPET ATTACHMENT DETAIL

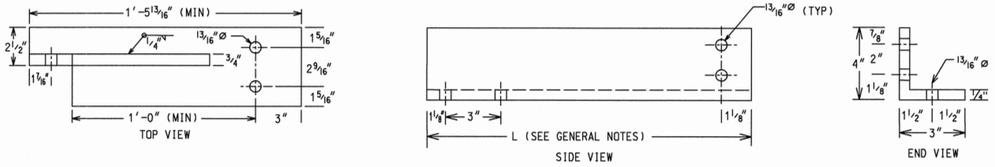

BOTTOM SUPPORT BRACKET DETAIL

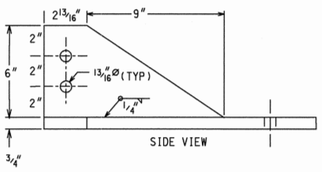

MOUNTING PLATE DETAIL

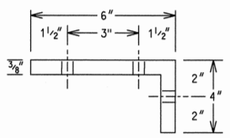

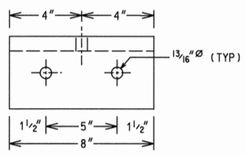

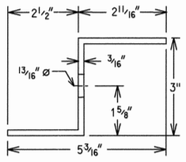

"Z" BAR DETAIL

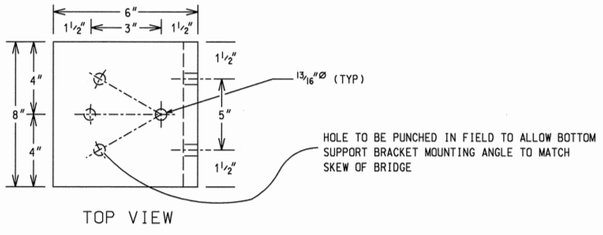

CLIP DETAIL

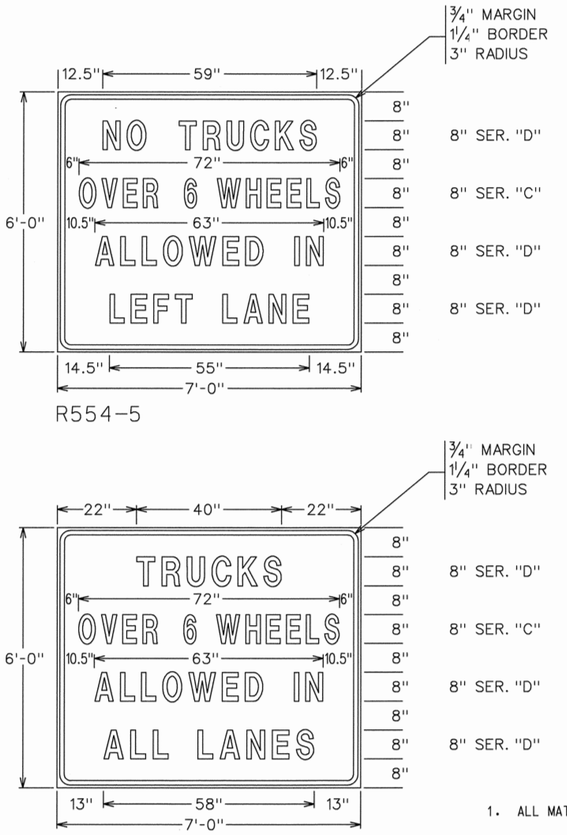

R554-5

R554-10

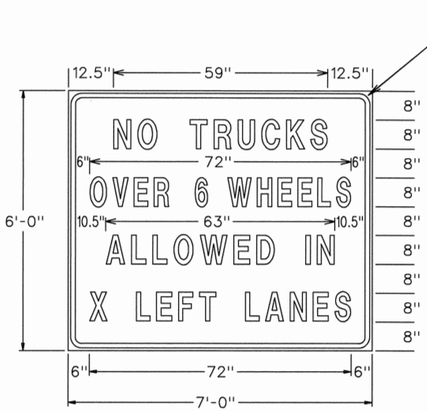

SIGN CODE	X
R554-6	2
R554-7	3
R554-8	4
R554-9	5

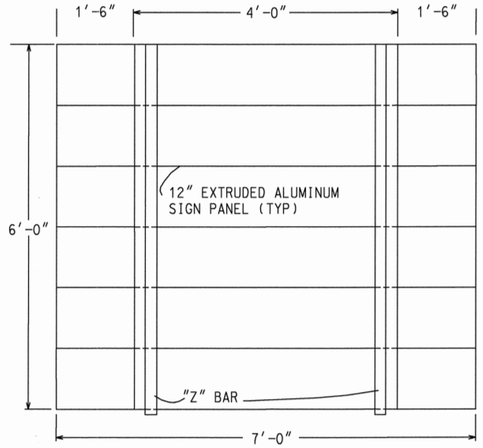

SIGN ASSEMBLY DETAIL
(BACK VIEW)

GENERAL NOTES

1. ALL MATERIALS SHALL BE A709 GRADE 36 GALVANIZED STEEL UNLESS SPECIFIED OTHERWISE.
2. ALL CONNECTIONS SHALL BE MADE WITH SELF LOCKING NUTS OR SPOT WELDED. THE THREADED PORTION OF BOLTS SHALL EXTEND A MINIMUM OF 1/2 INCH BEYOND NUT.
3. THE R554-5 SIGN SHALL BE USED ON ROADWAYS WITH 3 LANES OF TRAVEL IN ONE DIRECTION. THE R554-6, 7, OR 8 SIGNS SHALL BE USED ON ROADWAYS OF 4, 5, OR 6 LANES, RESPECTIVELY, OF TRAVEL IN ONE DIRECTION.
4. WHEN USED, SHIMS SHALL BE ATTACHED TO THE "Z" BARS SUPPORTING THE SIGN. ON BRIDGES WITH A DECK OVERHANG, THE LENGTH OF THE MOUNTING PLATE SHALL BE INCREASED IN PROPORTION TO THE NUMBER OF SHIMS USED. ON BRIDGES WITH A PAPAPET, THE LENGTH OF THE BOLTS SHALL BE INCREASED IN PROPORTION TO THE NUMBER OF SHIMS USED.
5. ON BRIDGES WITH A SLOPE OTHER THAN ZERO, SHIMS SHALL BE USED TO ADJUST THE SIGN SO THAT THE BOTTOM OF THE SIGN IS LEVEL. WHEN USED, SHIMS SHALL BE ATTACHED TO THE BOTTOM OF THE MOUNTING PLATE.

   ON BRIDGES WITH A DECK OVERHANG, THE LENGTHS OF THE BOLTS SHALL BE INCREASED IN PROPORTION TO THE NUMBER OF SHIMS USED. ON BRIDGES WITH A PARAPET, THE HOLES FOR BOLTS SHALL BE DRILLED SO THAT THE SIGN IS LEVEL.
6. THE BOTTOM OF THE SIGN SHALL NOT EXTEND BELOW THE BOTTOM OF THE BRIDGE BEAM.
7. FOR DETAILS OF ALUMINUM EXTRUDED SIGN PANELS, POST CLIPS, AND BOLTS, SEE THE CURRENT VERSION OF GEORGIA STANDARD 9042.
8. THE LENGTH (L) OF THE BOTTOM SUPPORT BRACKET DEPENDS UPON THE BRIDGE BEAM SETBACK, AND SHALL BE DETERMINED IN THE FIELD.

DATE	REVISIONS
9/11/01	REV DETAILS FOR R554 SERIES; ADDED DETAIL FOR R554-10

GEORGIA DEPARTMENT OF TRANSPORTATION
OFFICE OF TRAFFIC SAFETY & DESIGN

T-07

DETAILS OF
BRIDGE ATTACHMENT

NO SCALE JANUARY 2000

GDOT Georgia Department of Transportation | P. I. No. XXXXXXX

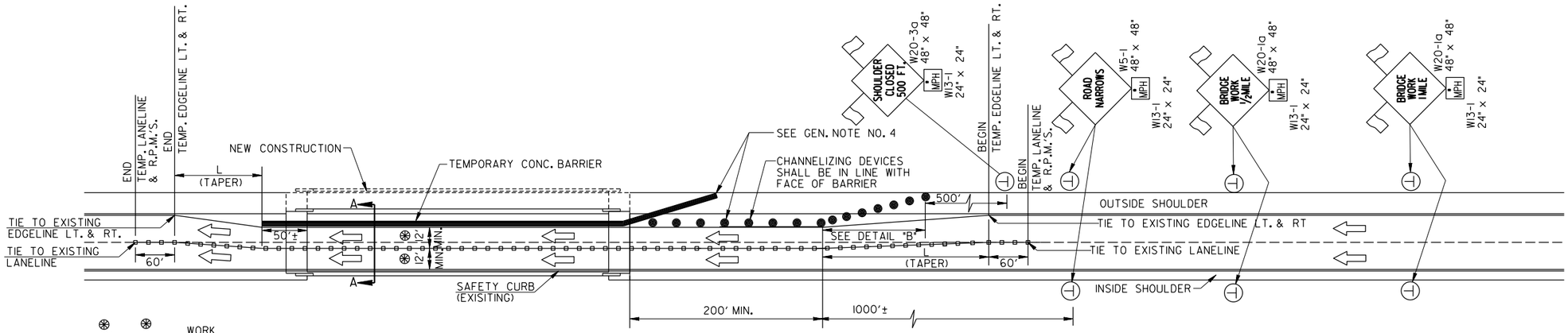

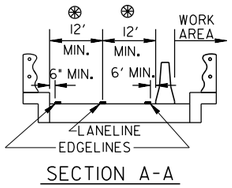

SECTION A-A

DETAIL "A" - WIDEN BRIDGES TO OUTSIDE

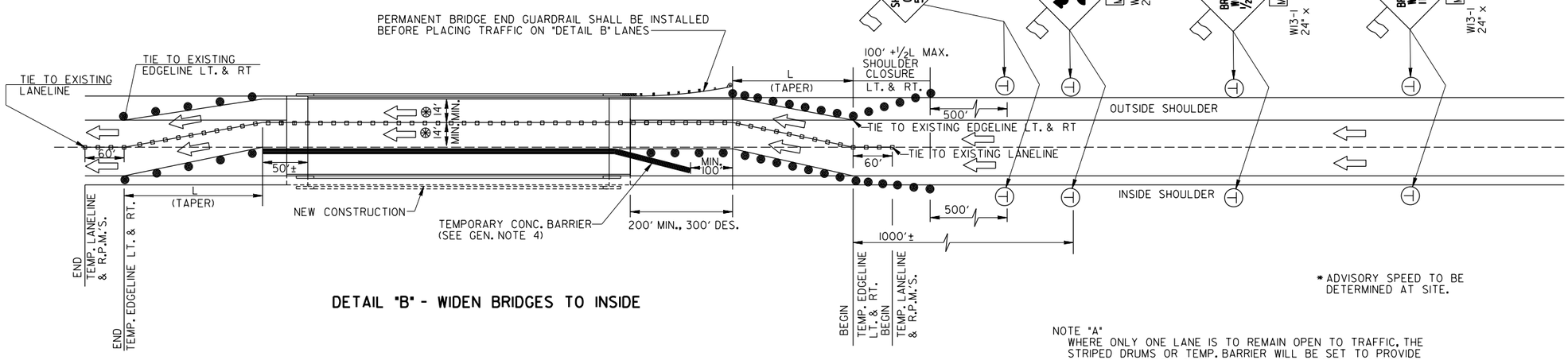

DETAIL "B" - WIDEN BRIDGES TO INSIDE

* ADVISORY SPEED TO BE DETERMINED AT SITE.

NOTE "A"
WHERE ONLY ONE LANE IS TO REMAIN OPEN TO TRAFFIC, THE STRIPED DRUMS OR TEMP. BARRIER WILL BE SET TO PROVIDE A 16 FT. UNOBSTRUCTED WIDTH ON THE BRIDGE IN ORDER TO REDUCE POSSIBLE CONTACT WITH WIDE LOADS.

⊛ WHEN DUE TO EXTREME CONDITIONS THESE MINIMUM WIDTHS CANNOT BE PROVIDED, THE ENGINEER MAY APPROVE WIDTHS REDUCED TO 11 FEET MINIMUM.

GENERAL NOTES:

1. CONSTRUCTION STAGES NOT SHOWN: STAGING SHALL BE AS SPECIFIED.
2. A TWO-MILE ADVANCE WARNING SIGN MAY BE REQUIRED IF TRAFFIC CONDITIONS WARRANT, BY ORDER OF THE ENGINEER. ADVISORY SPEED SHALL BE REDUCED IN NO MORE THAN 10 M.P.H. INCREMENTS ON THE ADVISORY SPEED PLATES FOR THE ADVANCE WARNING SIGNS.
3. REFER TO CONSTRUCTION DETAILS, "GENERAL NOTES, STD. LEGEND, MISC. DETAILS" FOR DETAILS OF WI-5R SPEC. & TEMP RAISED PAVEMENT MARKER DETAIL & OTHER DATA.
4. REFER TO GA. STD. 4960 FOR TEMPORARY CONCRETE BARRIER FLARE RATES, APPROACH END TREATMENT, AND/OR OTHER DETAILS RELATED TO TEMPORARY CONCRETE BARRIERS.
5. THE OFFICE OF PERMITS AND ENFORCEMENT WILL BE CONTACTED IN ADVANCE OF AND BEFORE CONSTRUCTION BEGINS, SO THAT MOBILE HOMES OR OTHER LARGE LOADS MAY BE REDIRECTED.
6. THE "BRIDGE CONSTRUCTION 1 MILE" ADVANCE WARNING SIGN (W20-1a, 48"X48") SHALL BE PLACED IN ADVANCE OF THE FIRST BRIDGE ONLY ON PROJECTS HAVING A SERIES OF BRIDGES UNDER CONSTRUCTION ON THE SAME ROADWAY.

TAPER FORMULA

L=WXS (BUT NOT LESS THAN 150') FOR SPEEDS OF 45 OR MORE;

$L = WS^2/60$ (BUT NOT LESS THAN 150') FOR SPEEDS OF 40 OR LESS,

WHERE:

½L=MINIMUM LENGTH OF TAPER(FEET)
L=DESIRABLE LENGTH OF TAPER
S=POSTED SPEED LIMIT PRIOR TO WORK AREA
W=WIDTH OF OFFSET(FEET)

NOTICE TO CONTRACTOR

THE CONTRACTOR SHALL MAINTAIN APPLICABLE EXISTING CENTERLINES, LANELINES, EDGELINES AND SHALL INSTALL AND MAINTAIN ALL TEMPORARY CENTERLINES, LANELINES, AND EDGELINES. DESIRABLE PATTERN LINES SHALL BE USED AT ALL TIMES IN ACCORDANCE WITH SECTION 150-SPECIAL PROVISIONS AND/OR SUPPLEMENTAL SPECIFICATIONS. ANY EXISTING TRAFFIC STRIPES IN CONFLICT WITH THE TEMPORARY MARKINGS SHALL BE REMOVED OR OVERLAID.

LEGEND

- ● STRIPED DRUM
- ▫ ▫ ▫ TEMPORARY RAISED PAVEMENT MARKERS, TYPE 2 (CLEAR) SPACED AT 20' O.C.
- Ⓣ TEMPORARY POST MOUNTED SIGN - NO FLAGS REQ'D.
- Ⓚ PORTABLE MOUNTED SIGN - FLAGS REQ'D.
- → SEQUENTIAL OR FLASHING ARROW

BY	REVISION	REV.	REV.	DATE
			05-25-99	
			08-25-94	

DEPARTMENT OF TRANSPORTATION
STATE OF GEORGIA

CONSTRUCTION DETAIL

TYPICAL SLOPE PAVING DETAILS

SEPTEMBER 1988
NOT TO SCALE

NUMBER T-08

STATE	PROJECT NUMBER	SHEET NO.	TOTAL SHEETS
GA.			

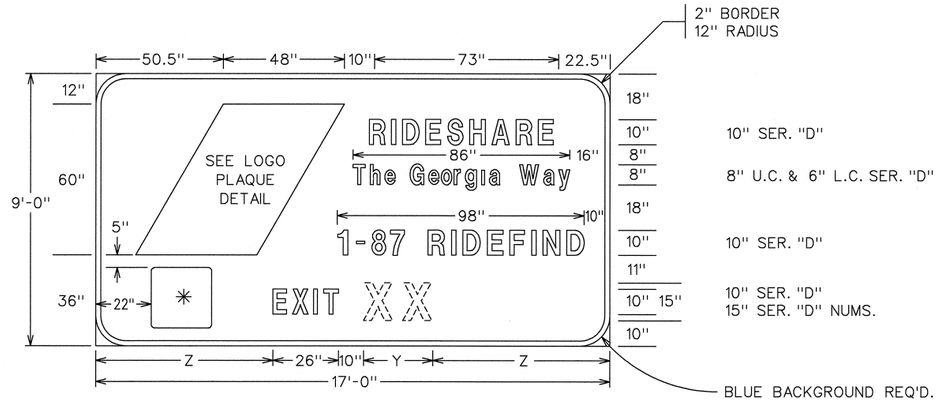

Y DETERMINED BY USING TAKEOUTS PROGRAM
Z (168"-Y)/2

*STANDARD SIZE BUS LOGO PLAQUE (SEE PAGE 3-73 IN THE STANDARD HIGHWAY SIGNS BOOK) TO BE USED ON SIGNS FOR MARTA RIDESHARE LOTS, EXCEPT THAT PLAQUE SHALL HAVE STANDARD INTERSTATE BLUE REFLECTORIZED BACKGROUND WITH WHITE REFLECTORIZED SYMBOL.

SPECIAL ROADSIDE AND OVERHEAD SIGN DETAIL

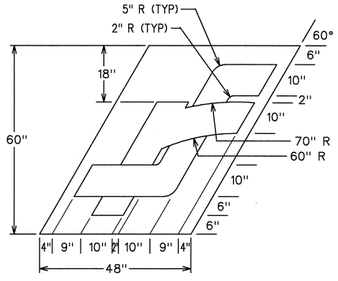

LOGO PLAQUE DETAIL

COLORS
LETTER R - RED (REFL)
LETTER S - BLACK (NON-REFL)
BACKGROUND - WHITE (REFL)

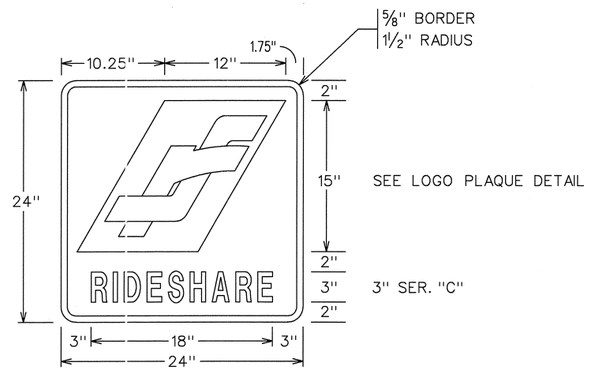

NOTES:
1. SIGN SHALL HAVE STANDARD INTERSTATE BLUE REFLECTORIZED BACKGROUND WITH WHITE REFLECTORIZED BORDER AND LEGEND.
2. THE APPROPRIATE MB6 SIGN SHALL BE MOUNTED ON THE SAME POST BELOW THIS SIGN.

STANDARD (FLAT SHEET ALUMINUM) SIGN DETAIL

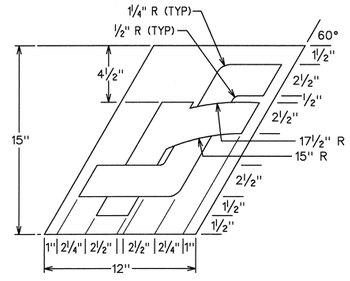

LOGO PLAQUE DETAIL

COLORS
LETTER R - RED (REFL)
LETTER S - BLACK (NON-REFL)
BACKGROUND - WHITE (REFL)

DATE	REVISIONS

GEORGIA DEPARTMENT OF TRANSPORTATION
OFFICE OF TRAFFIC SAFETY & DESIGN

T-09A

DETAILS OF
RIDESHARE SIGNS

NO SCALE NOVEMBER 1999

STATE	PROJECT NUMBER	SHEET NO.	TOTAL SHEETS
GA.			

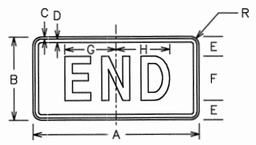

M4-6

SIGN	DIMENSIONS (INCHES)								
	A	B	C	D	E	F	G	H	R
STD & MIN	24	12	3/8	5/8	3	6D	7	7 1/4	1 1/2
SPECIAL	30	15	3/8	5/8	3 1/2	8D	9 1/4	9 3/4	1 1/2

COLORS

LEGEND & BORDER - BLACK (NON-REFL)
BACKGROUND - WHITE (REFL)

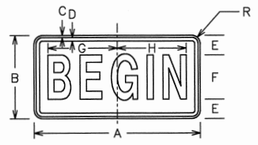

M10-5

SIGN	DIMENSIONS (INCHES)								
	A	B	C	D	E	F	G	H	R
STD & MIN	24	12	3/8	5/8	3	6C	9 1/2	9 1/2	1 1/2
SPECIAL	30	15	3/8	5/8	3 1/2	8C	12 1/2	12 1/2	1 1/2

COLORS

LEGEND & BORDER - BLACK (NON-REFL)
BACKGROUND - WHITE (REFL)

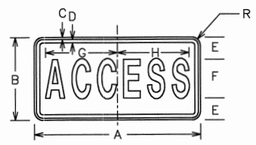

M10-6

SIGN	DIMENSIONS (INCHES)								
	A	B	C	D	E	F	G	H	R
STD & MIN	24	12	3/8	5/8	3	6C	*10 1/2	*10 1/2	1 1/2
SPECIAL	30	15	3/8	5/8	4	7C	**13	**13	1 1/2

*REDUCE INTER-LETTER SPACING 78%
**REDUCE INTER-LETTER SPACING 50%

COLORS

LEGEND & BORDER - BLACK (NON-REFL)
BACKGROUND - WHITE (REFL)

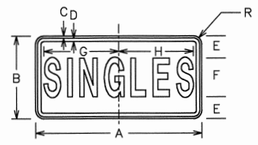

M10-7

SIGN	DIMENSIONS (INCHES)								
	A	B	C	D	E	F	G	H	R
STD & MIN	24	12	3/8	5/8	3 1/2	5C	*10 1/2	*10 1/2	1 1/2
SPECIAL	30	15	3/8	5/8	4	7C	**13	**13	1 1/2

*REDUCE INTER-LETTER SPACING 25%
**REDUCE INTER-LETTER SPACING 55%

COLORS

LEGEND & BORDER - BLACK (NON-REFL)
BACKGROUND - WHITE (REFL)

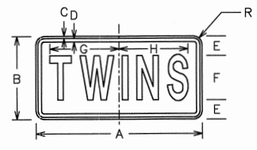

M10-8

SIGN	DIMENSIONS (INCHES)								
	A	B	C	D	E	F	G	H	R
STD & MIN	24	12	3/8	5/8	3	6C	9 1/2	9 1/2	1 1/2
SPECIAL	30	15	3/8	5/8	3 1/2	8C	12 1/2	12 1/2	1 1/2

COLORS

LEGEND & BORDER - BLACK (NON-REFL)
BACKGROUND - WHITE (REFL)

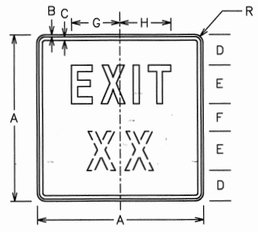

M10-9

SIGN	DIMENSIONS (INCHES)								
	A	B	C	D	E	F	G	H	R
STD & MIN	24	3/8	5/8	4	6D	4	7 3/4	8 1/4	1 1/2
SPECIAL	30	3/8	5/8	5 1/2	7D	5	8 3/4	9 1/4	1 1/2

NOTE: OPTICALLY SPACE EXIT NUMBER ABOUT VERTICAL CENTERLINE

COLORS

LEGEND & BORDER - BLACK (NON-REFL)
BACKGROUND - WHITE (REFL)

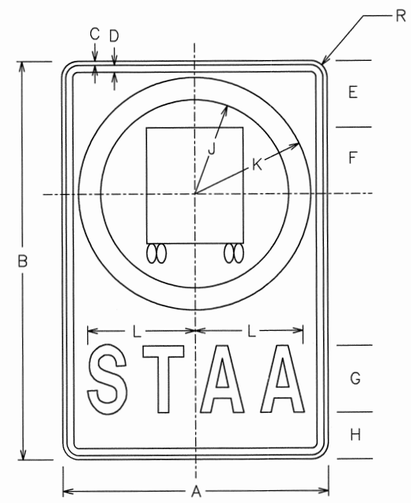

R14-4a

SIGN	DIMENSIONS (INCHES)											
	A	B	C	D	E	F	G	H	J	K	L	R
STD & MIN	24	36	3/8	5/8	6	6	6D	4 1/4	10 1/2	8 1/2	9 3/4	1 1/2
SPECIAL	30	48	1/2	3/4	7	8	8D	6 5/8	13 1/8	10 5/8	13	1 7/8
SPECIAL	36	60	5/8	7/8	8 1/2	9 1/2	10C	8 7/8	15 3/4	12 3/4	13	2 1/4
SPECIAL	48	72	3/4	1 1/4	12	12	12D	8 1/2	21	17	19 1/2	3

COLORS

LEGEND, SYMBOL, BORDER - BLACK (NON-REFL)
BACKGROUND - WHITE (REFL)
CIRCLE - GREEN (REFL)

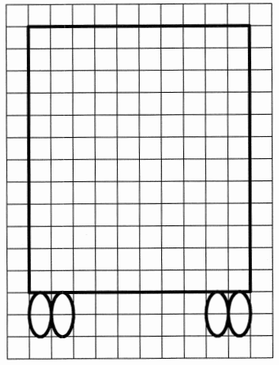

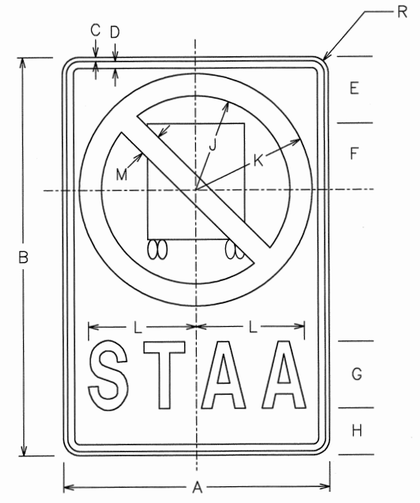

R14-5a

SIGN	DIMENSIONS (INCHES)												
	A	B	C	D	E	F	G	H	J	K	L	M	R
STD & MIN	24	36	3/8	5/8	6	6	6D	4 1/4	10 1/2	8 1/2	9 3/4	2	1 1/2
SPECIAL	30	48	1/2	3/4	7	8	8D	6 5/8	13 1/8	10 5/8	13	2 1/2	1 7/8
SPECIAL	36	60	5/8	7/8	8 1/2	9 1/2	10C	8 7/8	15 3/4	12 3/4	13	3	2 1/4
SPECIAL	48	72	3/4	1 1/4	12	12	12D	8 1/2	21	17	19 1/2	4	3

COLORS

LEGEND, SYMBOL, BORDER - BLACK (NON-REFL)
BACKGROUND - WHITE (REFL)
CIRCLE & DIAGONAL - RED (REFL)

DATE	REVISIONS

GEORGIA DEPARTMENT OF TRANSPORTATION
OFFICE OF TRAFFIC SAFETY & DESIGN

T-09B

DETAILS OF
TRUCK RESTRICTION SIGNS

NO SCALE FEBRUARY 2000

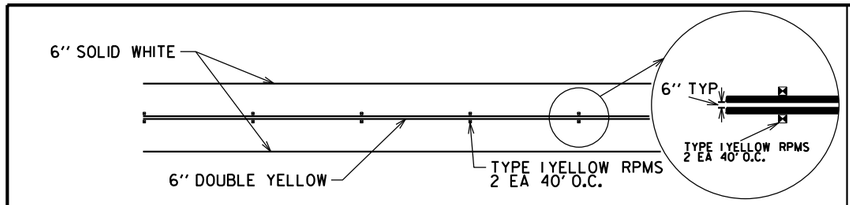

TWO-WAY NO PASSING ZONE

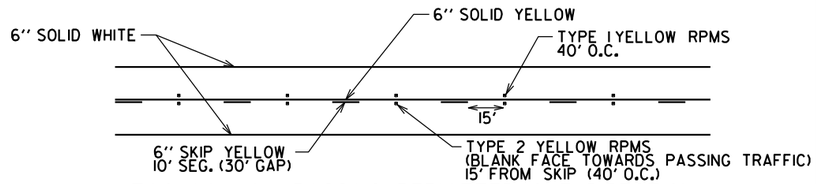

TWO-WAY W/ PASSING PERMITTED ONE DIRECTION

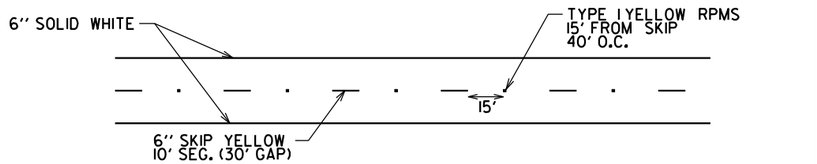

TWO-WAY PASSING PERMITTED IN BOTH DIRECTIONS

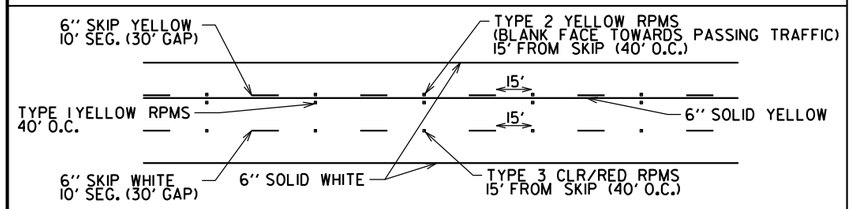

TWO-WAY, SINGLE LANE DIRECTION PERMITTED TO PASS

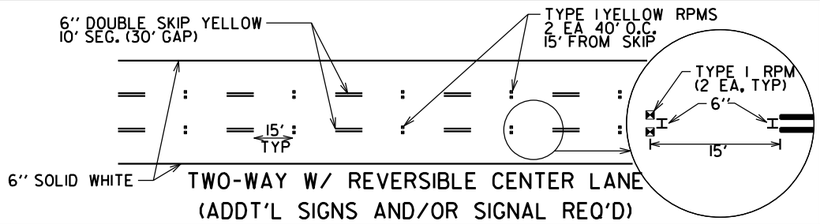

TWO-WAY W/ REVERSIBLE CENTER LANE (ADDT'L SIGNS AND/OR SIGNAL REQ'D)

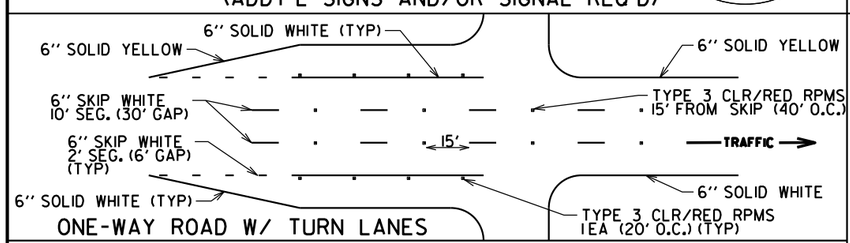

ONE-WAY ROAD W/ TURN LANES

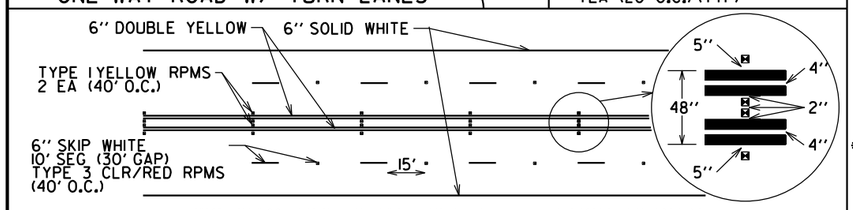

TWO-WAY MULTILANE W/ 4 FT FLUSH MEDIAN

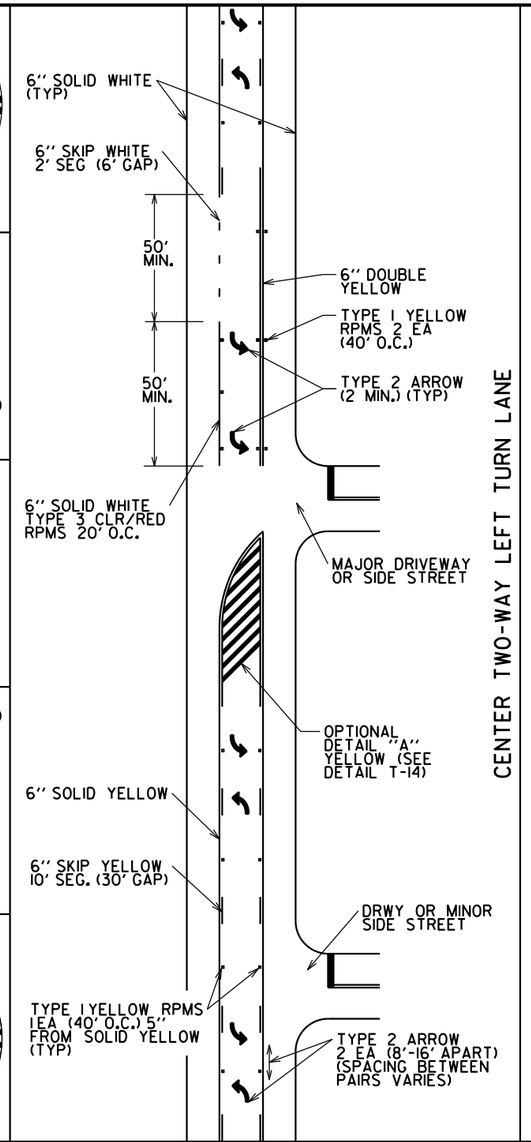

CENTER TWO-WAY LEFT TURN LANE

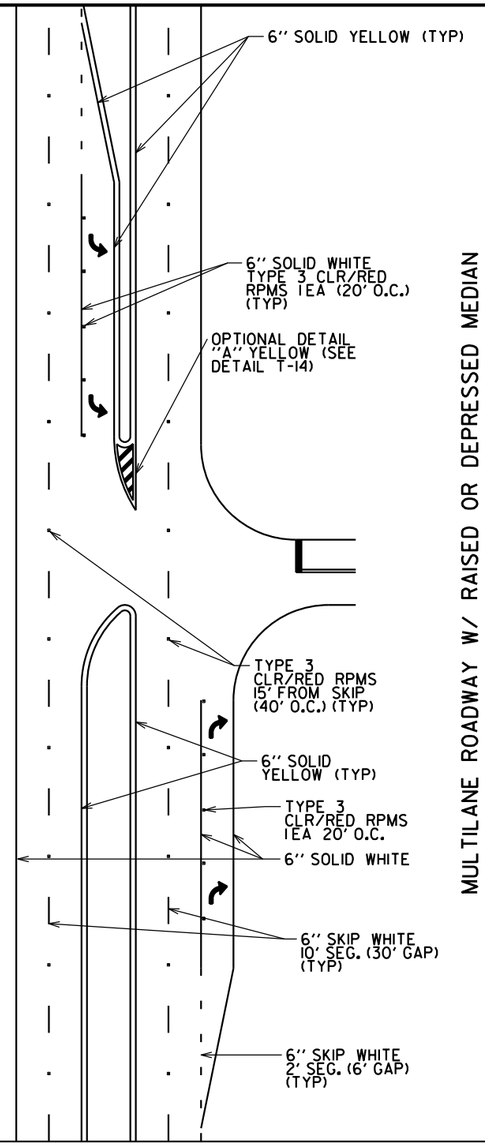

MULTILANE ROADWAY W/ RAISED OR DEPRESSED MEDIAN

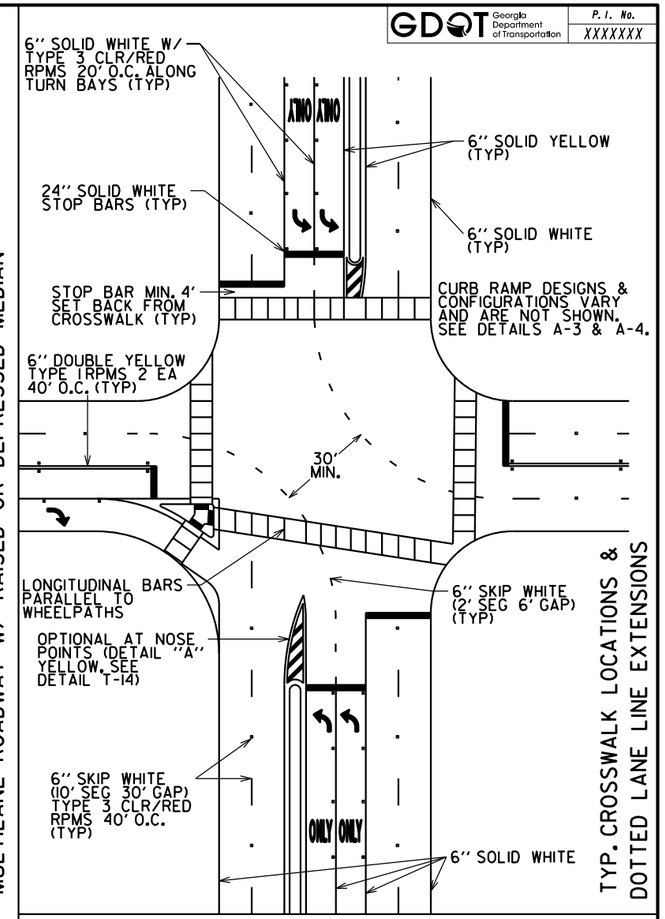

TYP. CROSSWALK LOCATIONS & DOTTED LANE LINE EXTENSIONS

CROSSWALK DETAIL

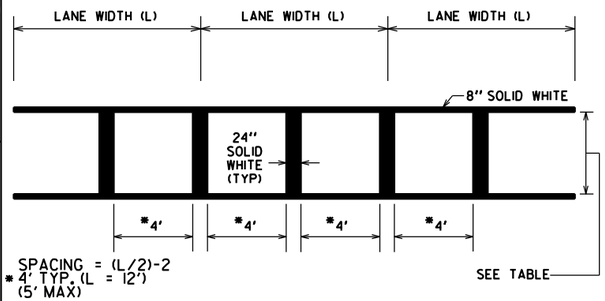

Sidewalk or Path Width (FT)	Crosswalk Width (FT)		
	Minimum	Preferred	Maximum
5	8	8	8
6	8	10	10
7	8	10	10
8	8	10	10
9	9	10	11
10	10	11	12
11	11	11	13
12	12	12	14
13	13	13	15
14	14	14	16

GENERAL NOTES:

1. LONGITUDINAL PAVEMENT MARKINGS ON CONCRETE SURFACES SHALL INCLUDE CONTRAST. REFER TO DETAIL T-11B FOR DETAILS OF CONTRAST PAVEMENT MARKINGS AND RAISED PAVEMENT MARKER (RPM) PLACEMENT ON LIMITED ACCESS ROADWAYS.

2. SPACING BETWEEN ADJACENT LONGITUDINAL LINES SHALL BE MEASURED CENTER TO CENTER UNLESS OTHERWISE DEPICTED IN THIS DETAIL (i.e. 4 FT FLUSH MEDIANS & CROSSWALKS). SPACING BETWEEN DOUBLE YELLOW LINES SHALL EQUAL TO LANE WIDTH IN INCHES (12" TYP. C-C).

3. EDGE LINES SHALL BE PLACED 4" FROM NORMAL EDGE OF PAVEMENT.

4. LONGITUDINAL STRIPING SHALL BE PLACED MIN. 2" FROM ADJACENT PAVEMENT JOINTS.

5. REFER TO DETAIL T-15C FOR DESIGN OF RPMS

6. TYPE I YELLOW RPMS SHALL BE PLACED 40' ON CENTER.

7. RPMS SHALL BE PLACED 5" LATERALLY (EDGE TO EDGE) FROM NEAREST ADJACENT LONGITUDINAL STRIPE UNLESS OTHERWISE NOTED.

8. THE CLEAR FACE OF TYPE 3 CLR/RED RPMS SHALL BE ORIENTED TOWARDS NORMAL APPROACHING TRAFFIC

GDOT Georgia Department of Transportation | P. I. No. XXXXXXX

DEPARTMENT OF TRANSPORTATION
STATE OF GEORGIA

CONSTRUCTION DETAIL

PAVEMENT MARKING & RAISED PAVEMENT MARKER PLACEMENT; CONVENTIONAL ROADWAYS

BY	DATE	REVISION
RCA	7-01-24	MAJ. REVS., RPMS, X-WALK
ACP	7-01-24	ADDED GENERAL NOTE 3
	7-01-24	ADDED 6' STRIPING
CDR	9-15-16	ADDED GENERAL NOTE 4

JANUARY 2000
NOT TO SCALE

NUMBER T-11A

TAPERED EXIT RAMP

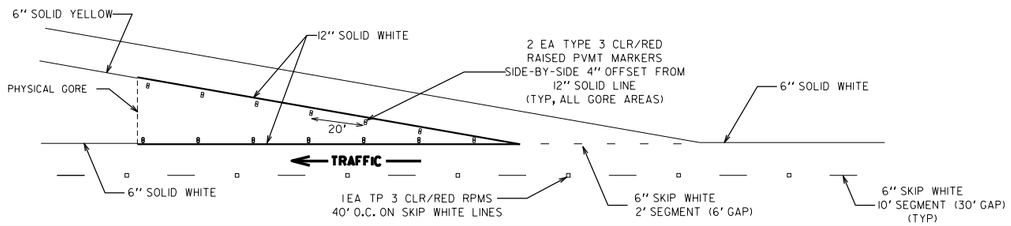

EXIT RAMP W/ DECEL LANE

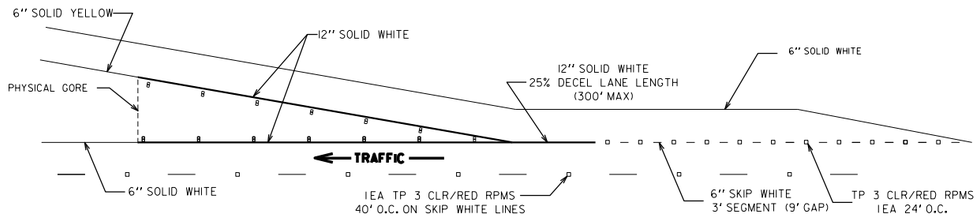

EXIT RAMP W/ LANE DROP

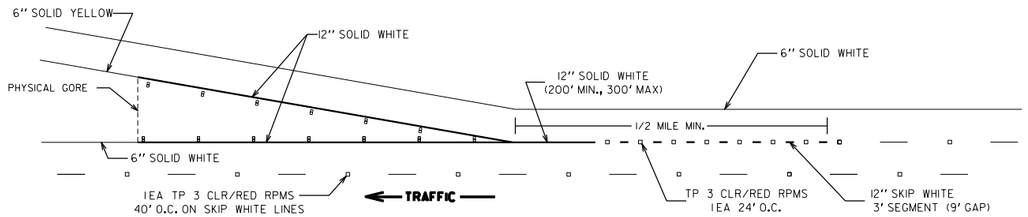

TAPERED ENTRANCE RAMP

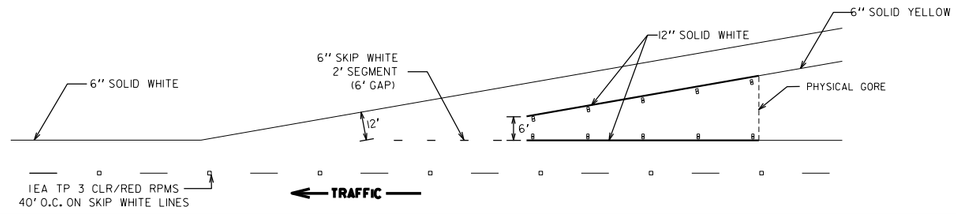

FREE-FLOW ENTRANCE RAMP

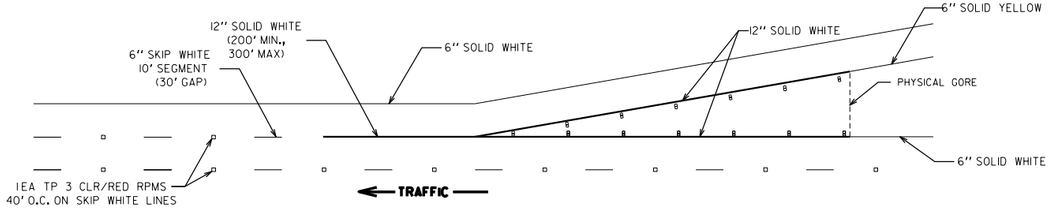

PARALLEL ENTRANCE RAMP

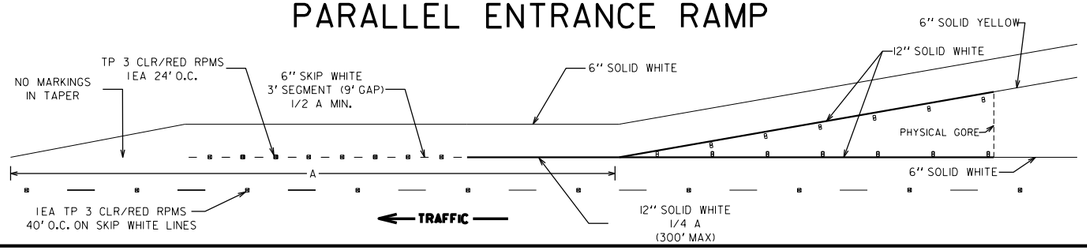

SKIP WHITE 10' SEGMENT (30' GAP)

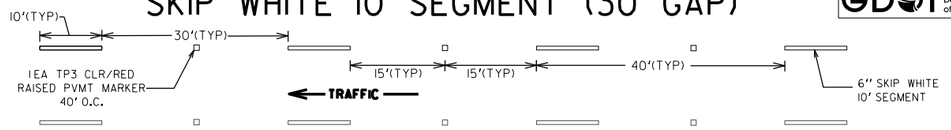

SKIP WHITE W/ CONTRAST 20' SEGMENT (20' GAP)

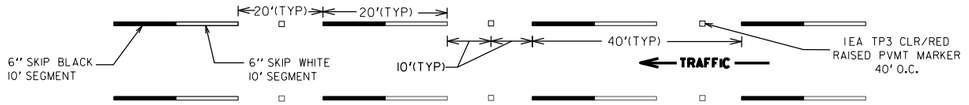

SKIP WHITE 2' SEGMENT (6' GAP)

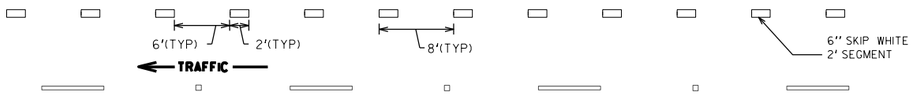

SKIP WHITE W/ CONTRAST 4' SEGMENT (4' GAP)

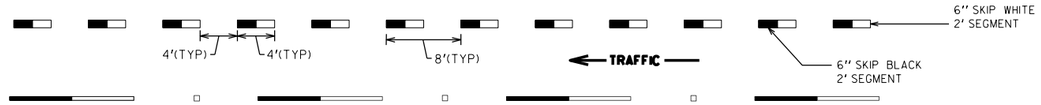

SKIP WHITE 2' SEGMENT (2' GAP) *



SKIP WHITE W/ CONTRAST 2' SEGMENT (2' GAP) *

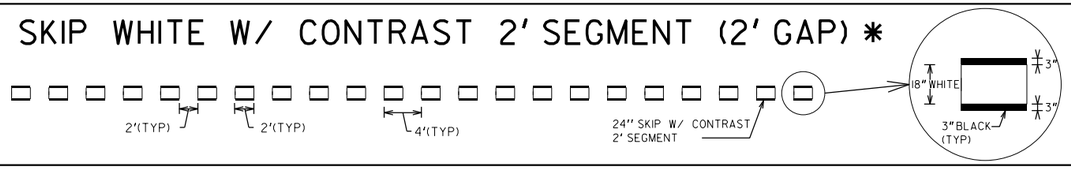

SKIP WHITE 3' SEGMENT (9' GAP)

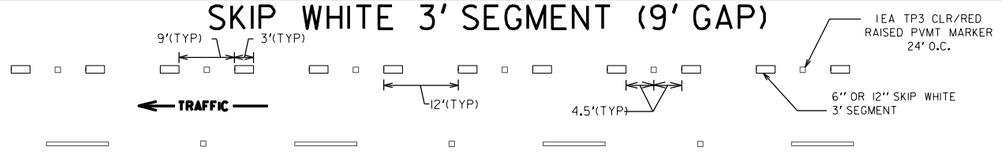

SKIP WHITE W/ CONTRAST 6' SEGMENT (6' GAP)



GENERAL NOTES:

1. EDGE LINES SHALL BE OFFSET 4 INCHES FROM NORMAL EDGE OF PAVEMENT.
2. CONTRAST MARKINGS ARE TO BE USED ON CONCRETE SURFACES, OR AS OTHERWISE SPECIFIED IN THE PLANS/CONTRACT.
3. SOLID LONGITUDINAL STRIPING WITH CONTRAST SHALL INCLUDE THE STANDARD WIDTH PLUS 1.5" OF BLACK ON EACH SIDE.
4. CLEAR FACE OF TYPE 3 RPMS SHALL BE ORIENTED TOWARDS APPROACHING TRAFFIC.

* EDGE LINE EXTENSION FOR USE ONLY AT ROUNDABOUT ENTRIES OR OTHER CHANNELIZED TURNS AS SPECIFIED IN THE PLANS/CONTRACT.

GDOT Georgia Department of Transportation | P. I. No. XXXXXXX

BY	DATE	REVISION
RCA	07-01-24	REDRAWN, NEW FIGURES, RPMS
ACP	07-01-24	ADDED 6" STRIPING
	07-01-24	ADDED 15' SKIPS W/ 25' GAPS
	07-01-24	ADDED 30' CONTRAST SKIPS W/ 10' GAPS
CDR	9-15-16	REDRAWN

DEPARTMENT OF TRANSPORTATION
STATE OF GEORGIA

CONSTRUCTION DETAIL

PAVEMENT MARKING & RAISED PAVEMENT MARKER PLACEMENT, LIMITED ACCESS ROADWAYS

JANUARY 2000
NOT TO SCALE

NUMBER T-11B

STATE	PROJECT NUMBER	SHEET NO.	TOTAL SHEETS
GA.			

EXIT RAMPS

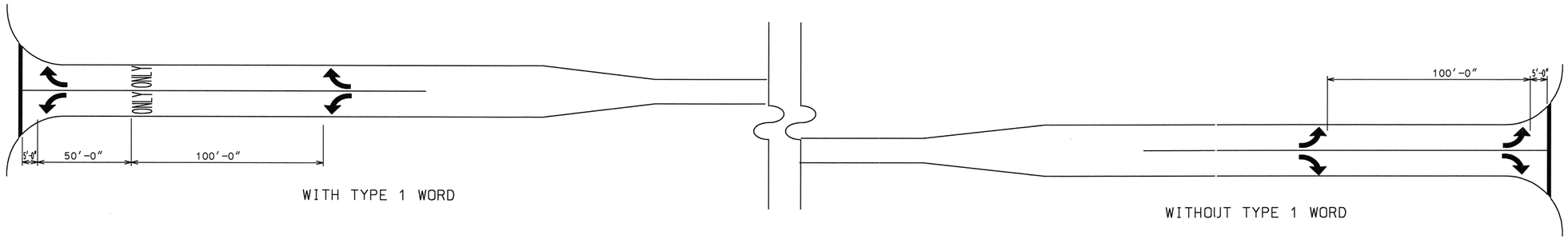

WITH TYPE 1 WORD

WITHOUT TYPE 1 WORD

SHORT TURN LANES

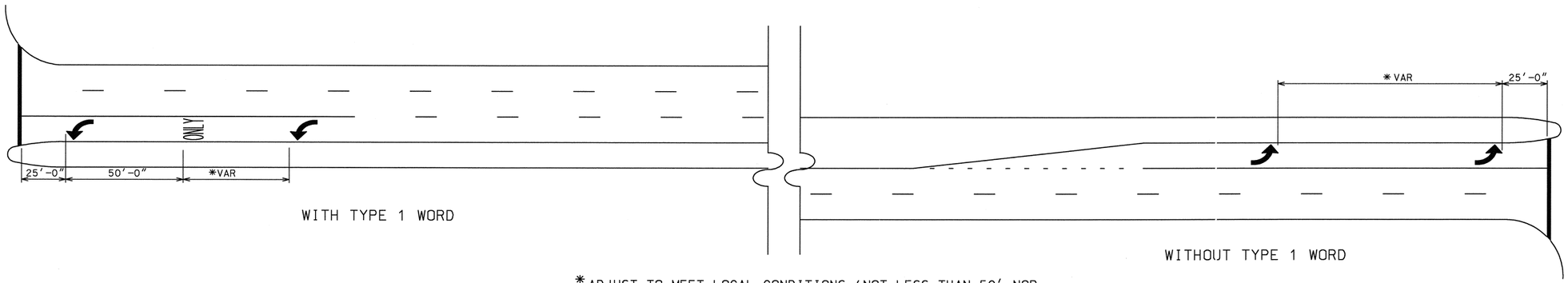

WITH TYPE 1 WORD

WITHOUT TYPE 1 WORD

*ADJUST TO MEET LOCAL CONDITIONS (NOT LESS THAN 50' NOR MORE THAN 100')

LONG TURN LANES

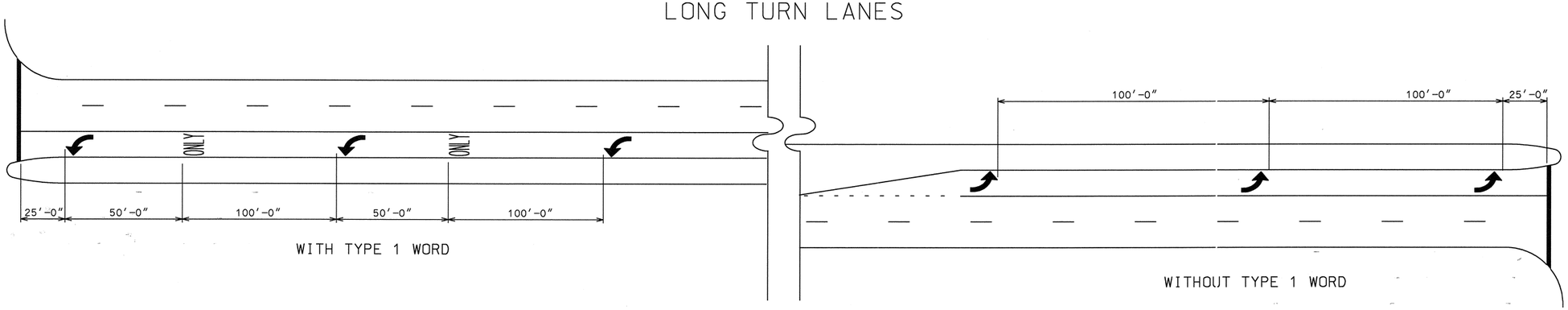

WITH TYPE 1 WORD

WITHOUT TYPE 1 WORD

GENERAL NOTES:

1. SPACING OF TYPE 2 ARROW IS REPRESENTATIVE OF SPACING FOR TYPE 1, TYPE 3, TYPE 4, & TYPE 5 ARROWS.
2. ALL TURNING LANES SHALL HAVE A MINIMUM OF 2 ARROWS.
3. GROUND MOUNTED OR OVERHEAD SIGNING SHALL BE SUPPLEMENTED BY TYPE 1 WORD.

DATE	REVISIONS

GEORGIA DEPARTMENT OF TRANSPORTATION
OFFICE OF TRAFFIC SAFETY & DESIGN

NO SCALE JAN 2000

DETAILS OF PAVEMENT MARKING ARROW LOCATION

T-12A

STATE	PROJECT NUMBER	SHEET NO.	TOTAL SHEETS
GA.			

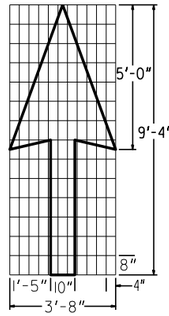

PAVEMENT MARKING, ARROW, TYPE 1
WHITE

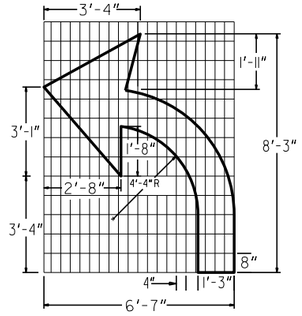

PAVEMENT MARKING, ARROW, TYPE 2
WHITE

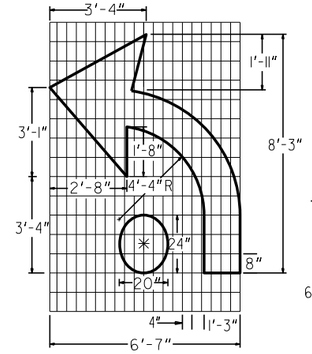

PAVEMENT MARKING, ARROW, TYPE 2A
WHITE

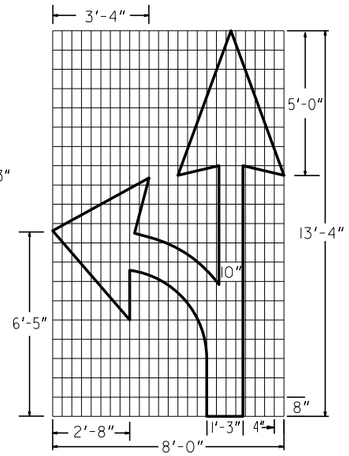

PAVEMENT MARKING, ARROW, TYPE 3
WHITE

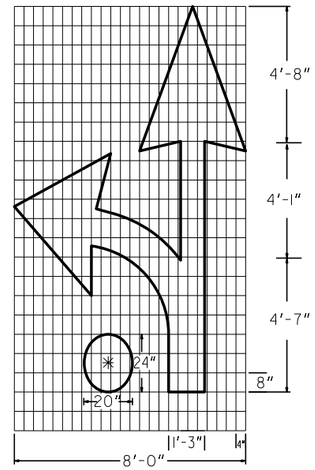

PAVEMENT MARKING, ARROW, TYPE 3A
WHITE

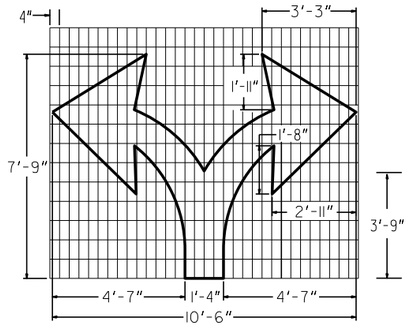

PAVEMENT MARKING, ARROW, TYPE 5
WHITE

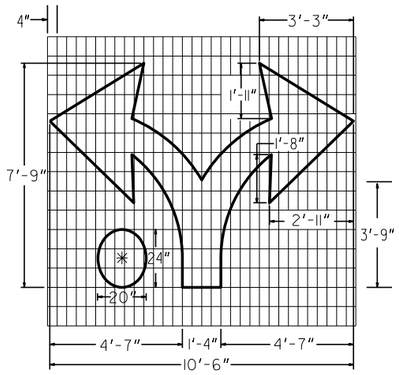

PAVEMENT MARKING, ARROW, TYPE 5A
WHITE

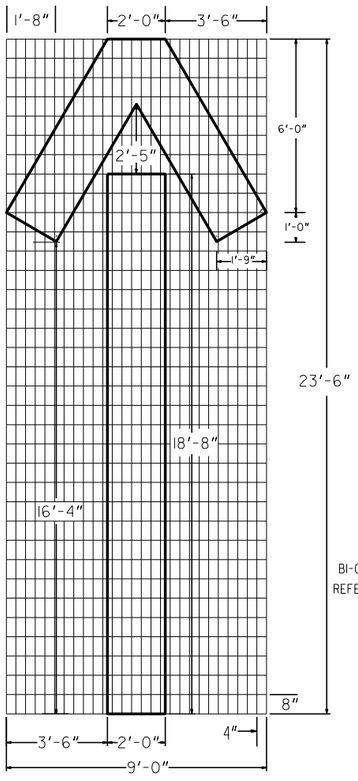

PAVEMENT MARKING, ARROW, TYPE 4
WHITE

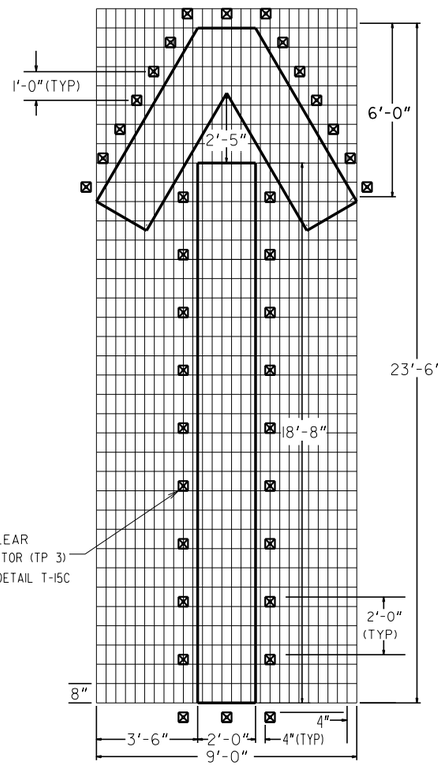

PAVEMENT MARKING, ARROW, WRONG WAY
WHITE

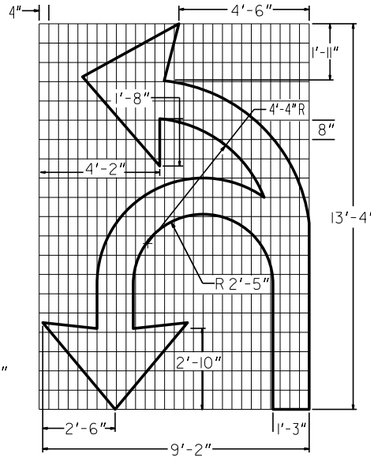

PAVEMENT MARKING, ARROW, TYPE 6
WHITE

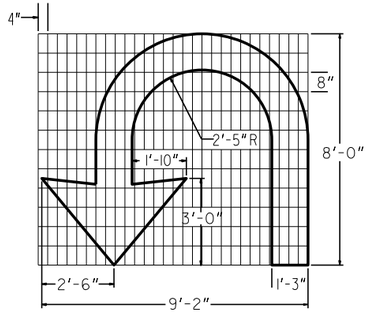

PAVEMENT MARKING, ARROW, TYPE 7
WHITE

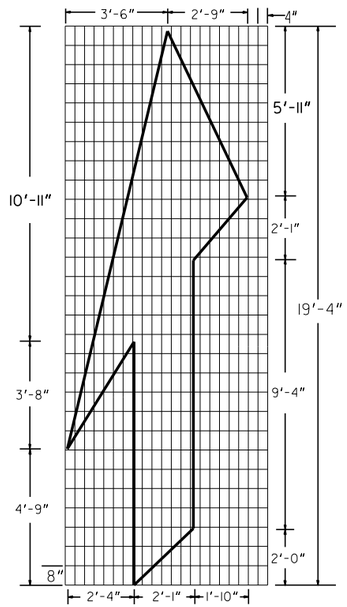

PAVEMENT MARKING, ARROW, TYPE 8
WHITE

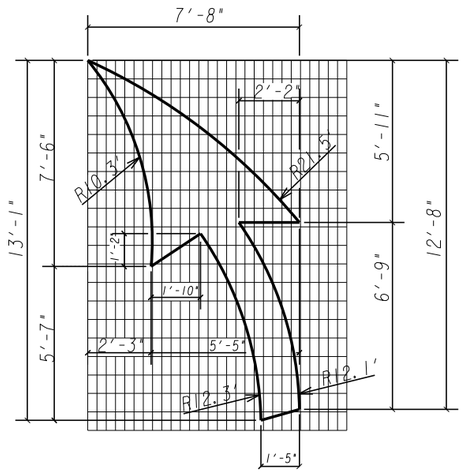

PAVEMENT MARKING, ARROW, TYPE 9
WHITE (MINI ROUNDABOUTS)

NOTES
1. PAVEMENT MARKING ARROWS WITH A DOT (2A, 3A, 5A) SHALL BE USED ALONG MULTI-LANE ROUNDABOUT APPROACHES ALONG THE INSIDE LANE ONLY

BY	REVISION	DATE
ACP	ADDED TP 9 PAVEMENT MARKING ARROWS FOR MINI ROUNDABOUTS	11-04-20
ACP	ADDED PAVEMENT MARKING ARROWS FOR ROUNDABOUTS	05-30-19
ACP	CHANGED LOCATION OF REFLECTORS ON WRONG WAY ARROW	04-11-00

DEPARTMENT OF TRANSPORTATION
STATE OF GEORGIA

CONSTRUCTION DETAILS
PAVEMENT MARKINGS - ARROWS

NO SCALE — APRIL 2000

DESIGNED ____
DRAWN ____
TRACED ____
CHECKED ____

NUMBER
T-12B

STATE	PROJECT NUMBER	SHEET NO.	TOTAL SHEETS
GA.			

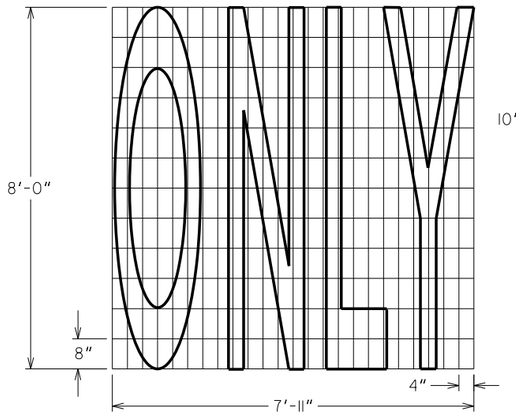

TYPE 1

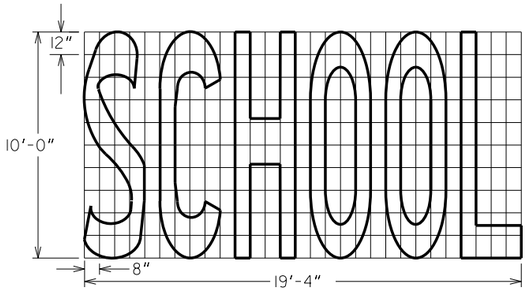

TYPE 3B
(TWO LANES)

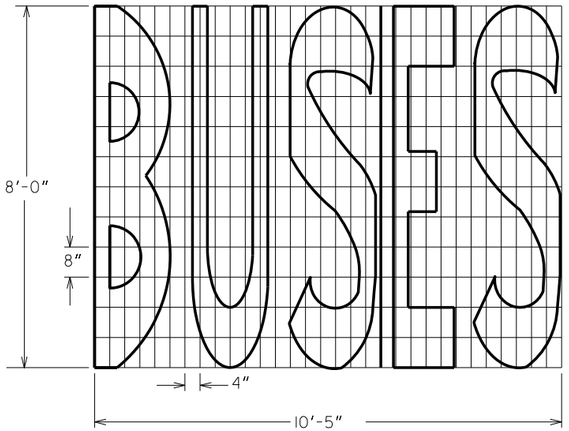

TYPE 6

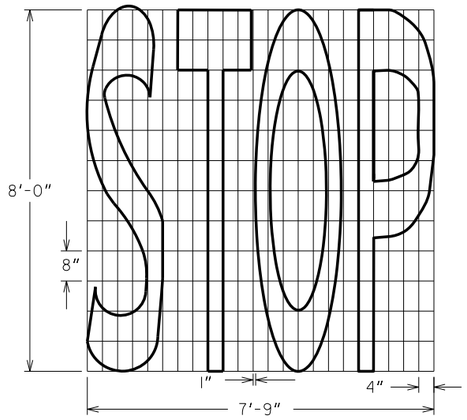

TYPE 2

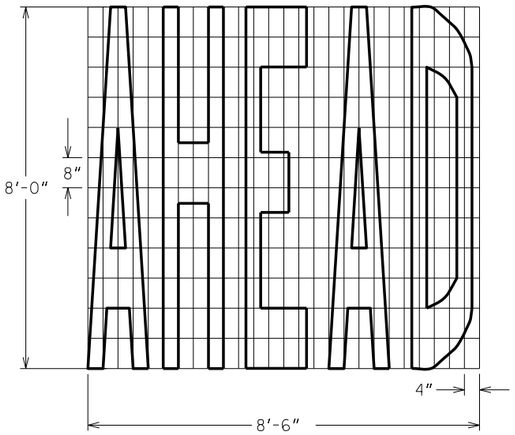

TYPE 4

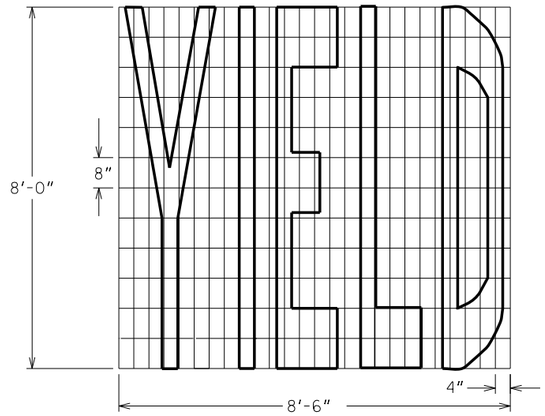

TYPE 15

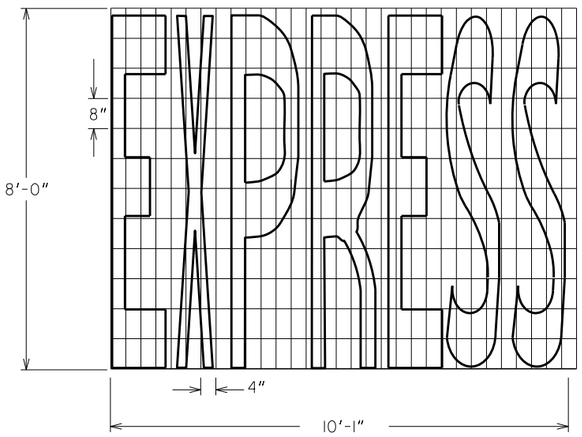

TYPE 20

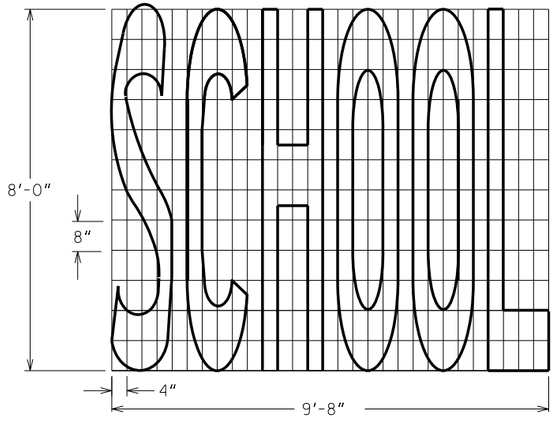

TYPE 3A (SINGLE LANE)

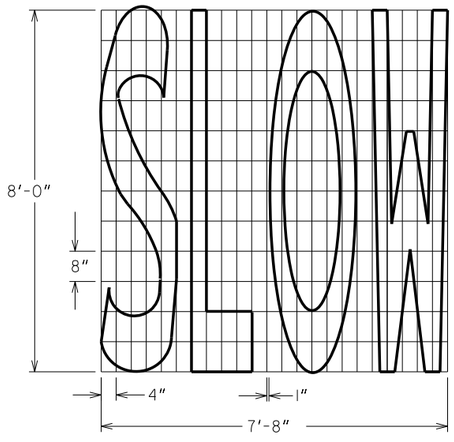

TYPE 5

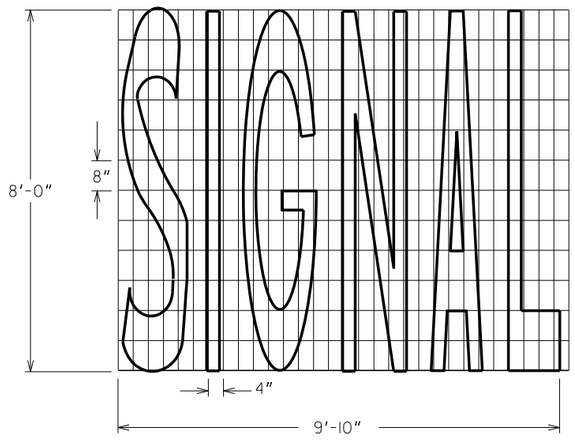

TYPE 16

DATE	REVISION	BY
11-04-20	ADDED "EXPRESS" PAVEMENT MARKING. ADDED "SIGNAL" PAVEMENT MARKING.	ACP

DEPARTMENT OF TRANSPORTATION
STATE OF GEORGIA

CONSTRUCTION DETAILS
PAVEMENT MARKINGS WORDS
SHEET 1 OF 2

NO SCALE — JAN. 2000

DESIGNED ____
DRAWN ____
TRACED ____
CHECKED ____

NUMBER
T-13A

STATE	PROJECT NUMBER	SHEET NO.	TOTAL SHEETS
GA.			

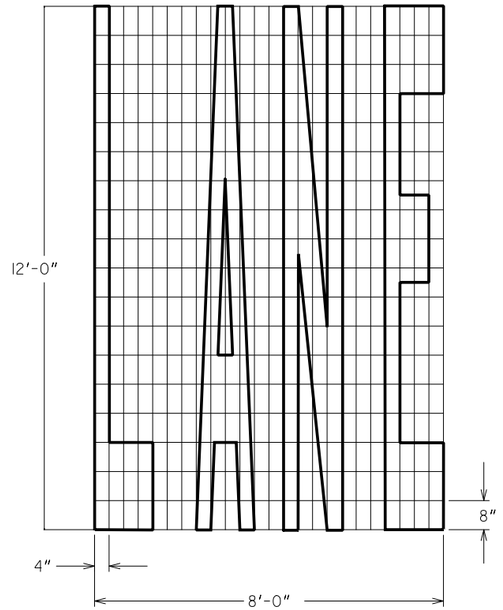

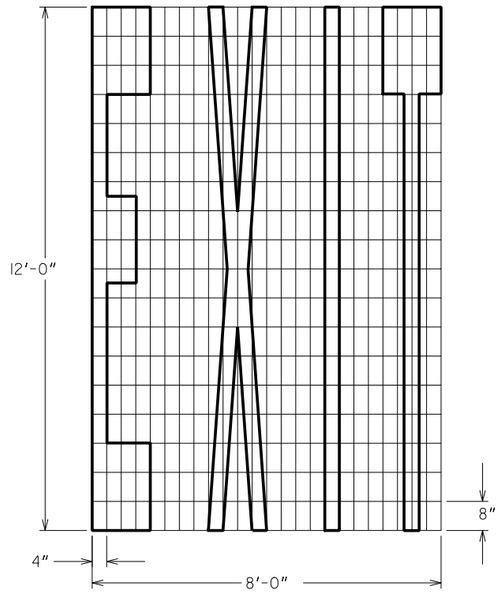

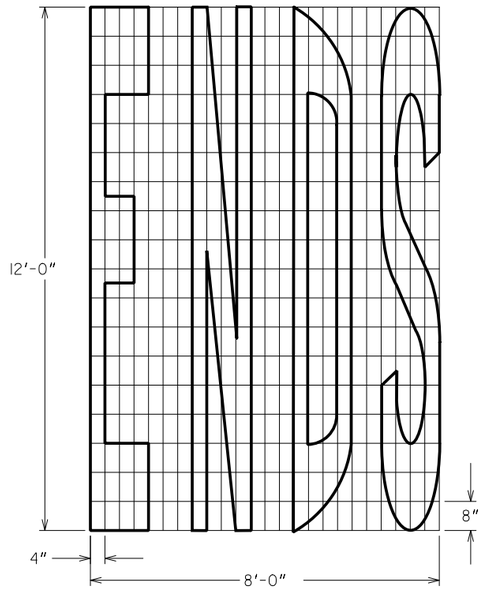

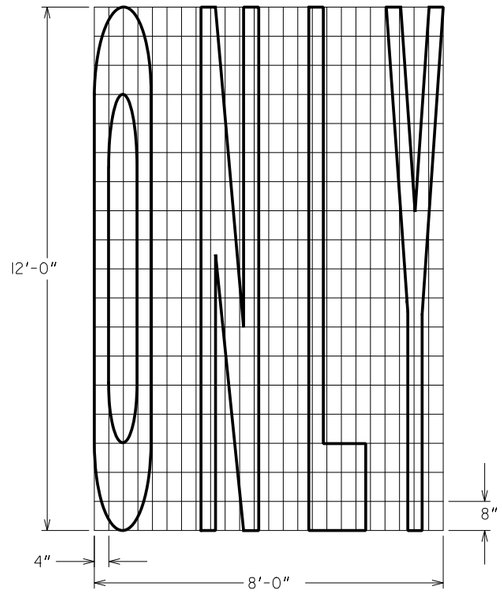

NOTE:
EACH OF THE PAVEMENT WORDS ON THIS DETAIL DEPICTS WORDS BASED ON A DESIGN SPEED OF 50-70 MPH. (A= 12 FT DISTANCE).

FOR DESIGN SPEEDS OF 35-45 MPH (A=8 FT DISTANCE), USE PAVEMENT WORDS WITH THE FOLLOWING DIMENSIONS: VERTICAL 8′-0" AND HORIZONTAL 5′-4".

SEE CONSTRUCTION DETAIL T-13C FOR SPEED LIMIT DISTANCE TABLE.

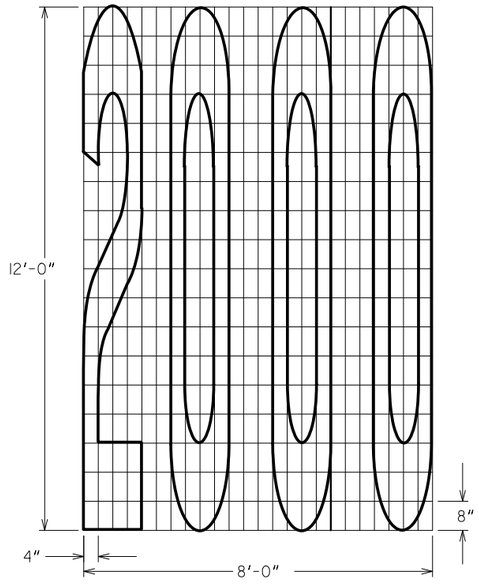

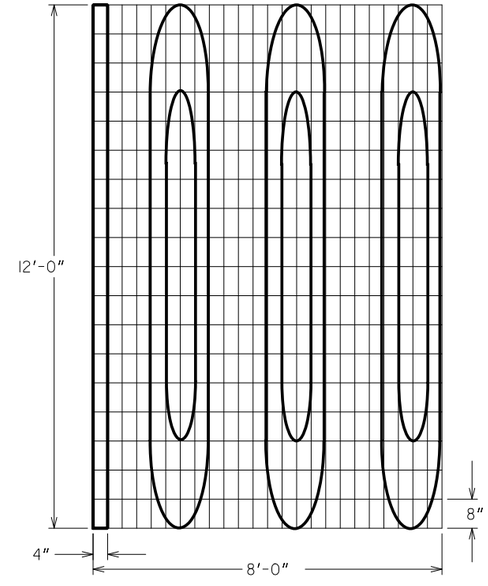

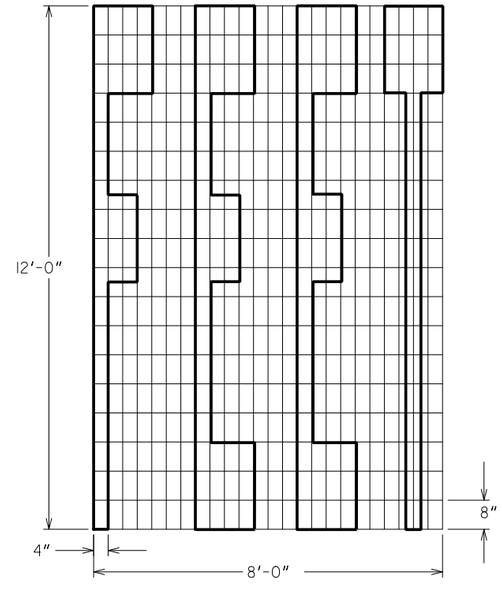

BY	DATE	REVISION
CDR	9-15-16	ADD PVMT WORD "ONLY"
		REM (AREA SF) PER WORD
		ADD WORD DIM NOTE A=8 FT
		RENUMBER TO SH 2 OF 3

DEPARTMENT OF TRANSPORTATION
STATE OF GEORGIA

CONSTRUCTION DETAILS

DETAILS OF
PAVEMENT MARKING WORDS

NO SCALE

SHEET 2 OF 3

JANUARY 2000

DESIGNED ____
DRAWN ____
TRACED ____
CHECKED ____

NUMBER
T-13B

STATE	PROJECT NUMBER	SHEET NO.	TOTAL SHEETS
GA.			



TYPE 7

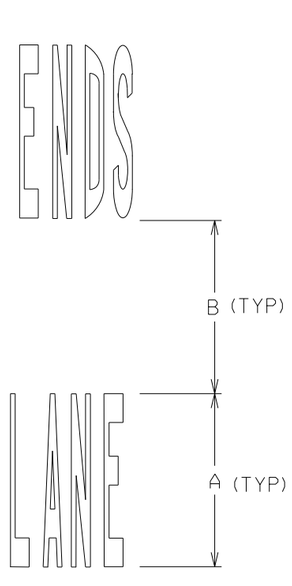

TYPE 10

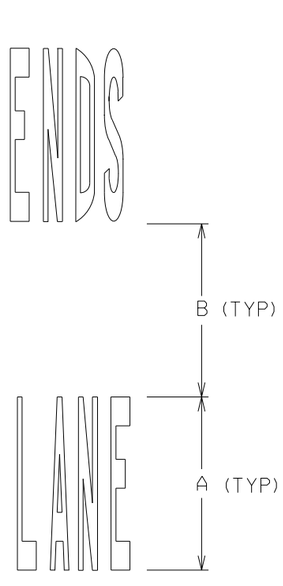

TYPE 11

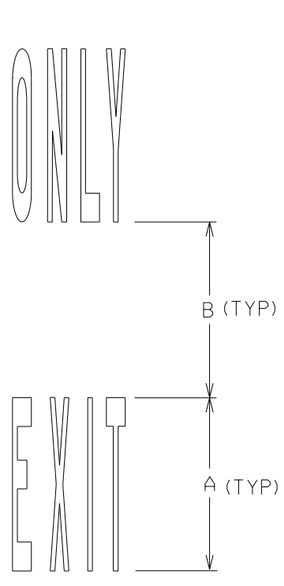

TYPE 12

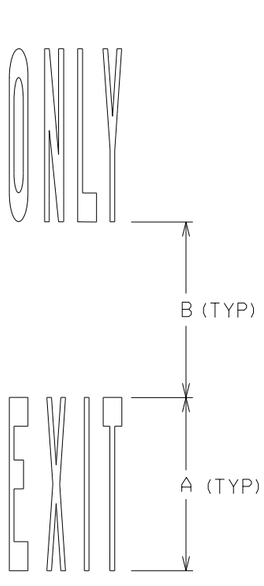

TYPE 13

SPEED LIMIT	DISTANCE (FEET)	
	A	B
35	8	80
45	8	80
55+	12	120

NOTE:
REFER TO GDOT DETAIL T-13B, MUTCD
OR STANDARD HIGHWAY SIGNS GUIDE
FOR ADDITIONAL GUIDANCE

BY	REVISION	DATE
ACP	ADD TYPE 7 PVMT MARKING	09-13-19
	REV TO DIMENSION TABLE	
COR	REV TO EXIT ONLY 1000 FT	9-15-16
	REV TO EXIT ONLY 2000 FT	
	REV DIST/SPEED LMT CHART	
	REM (AREA SF) WORD TOTAL	
	RENUMBER TO SH 3 OF 3	

DESIGNED ____
DRAWN ____
TRACED ____
CHECKED ____

DEPARTMENT OF TRANSPORTATION
STATE OF GEORGIA

CONSTRUCTION DETAILS

DETAILS OF PAVEMENT MARKING WORDS PLACEMENT

NO SCALE SHEET 3 OF 3 JANUARY 2000

NUMBER T-13C

STATE	PROJECT NUMBER	SHEET NO.	TOTAL SHEETS
GA.			

INTERSTATE SHIELD AND WORDS
PAVEMENT DETAILS

REFER TO MUTCD
STANDARD HIGHWAY SIGNS GUIDE
FOR DIMENSIONS

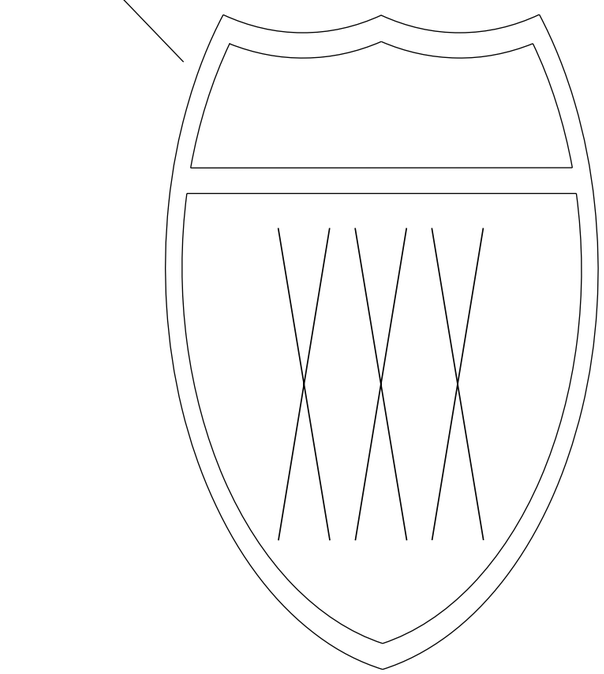

TYPE 5

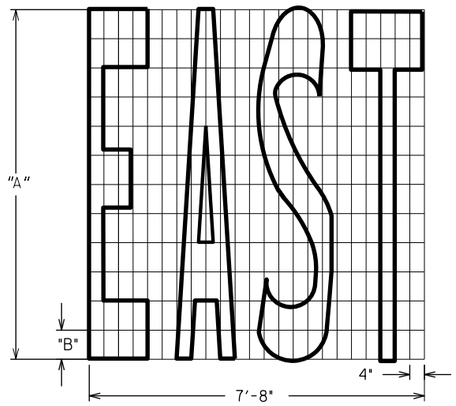

TYPE 21

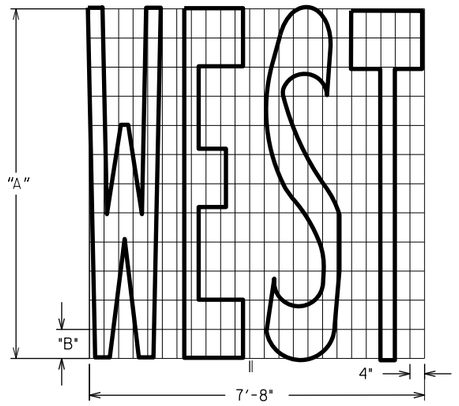

TYPE 22

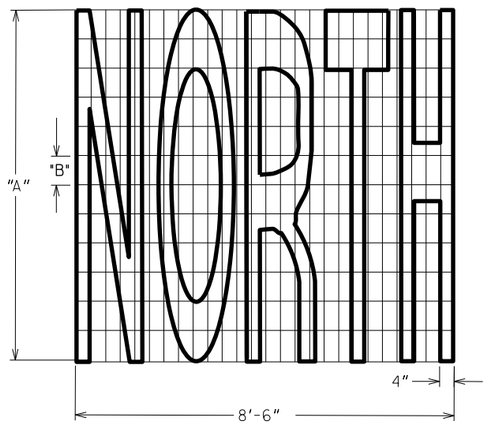

TYPE 23

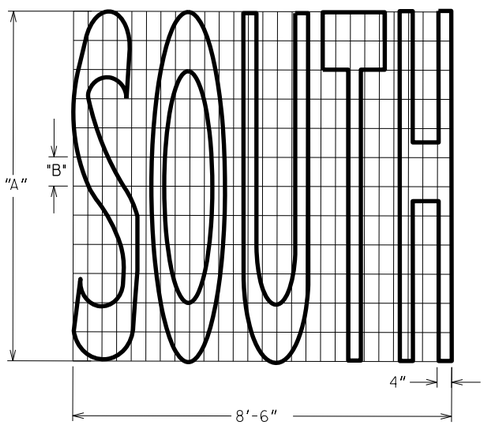

TYPE 24

SPEED LIMIT	DIMENSIONS		
	A	B	C
<50	8'	8"	80'
50+	12'	12"	120'

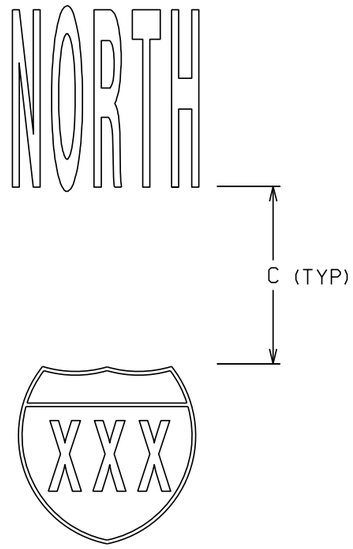

NOTE: SEE PLANS FOR LOCATIONS

DEPARTMENT OF TRANSPORTATION
STATE OF GEORGIA

CONSTRUCTION DETAILS

PAVEMENT MARKINGS -
INTERSTATE SHIELDS AND WORDS

NO SCALE — September 2019

DESIGNED ____
DRAWN ACP
TRACED ____
CHECKED JAHR

NUMBER
T-13D

GDOT Georgia Department of Transportation | P. I. No. XXXXXXX

DETAIL ''A'' (YELLOW)

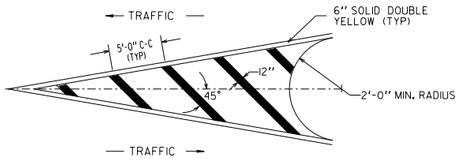

DETAIL ''B'' (YELLOW)

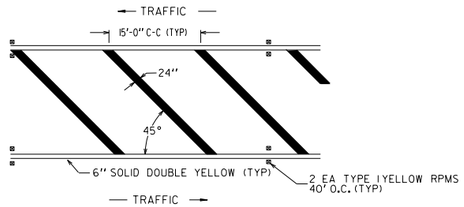

DETAIL ''C'' (YELLOW)

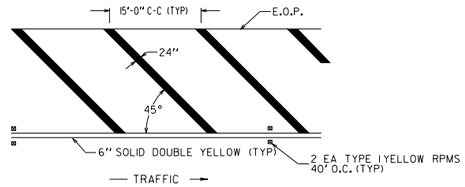

DETAIL ''D'' (YELLOW)

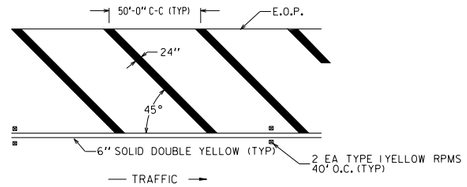

DETAIL ''A'' (WHITE)

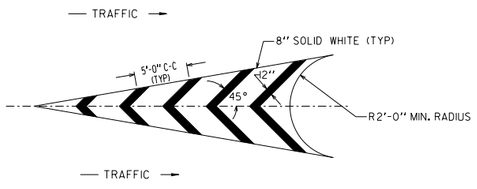

DETAIL ''B'' (WHITE)

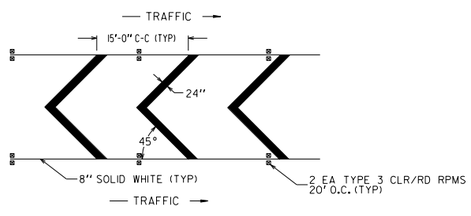

DETAIL ''C'' (WHITE)

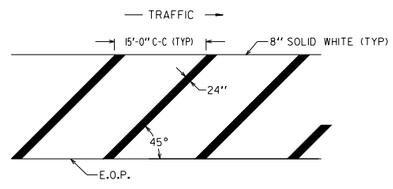

DETAIL ''D'' (WHITE)

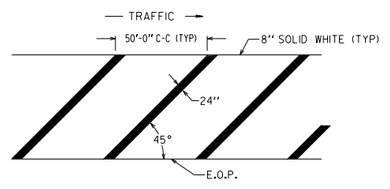

GENERAL NOTES:

1. FOR YELLOW STRIPING, THE SQUARE YARDS SHOWN ON PLANS, SUMMARY OF QUANTITIES, OR DETAILED ESTIMATE SHEETS INCLUDES THE AREA WITHIN THE BORDERS. THE 6'' SOLID DOUBLE YELLOW LINE BORDERS SHALL BE SUMMARIZED AND PAID FOR SEPARATELY.
2. FOR WHITE STRIPING, THE SQUARE YARDS SHOWN ON PLAN, SUMMARY AND DETAILED ESTIMATE SHEETS INCLUDES THE AREA WITHIN THE BORDERS AS WELL AS THE 8'' SOLID WHITE BORDER.
3. REFER TO DETAIL T-IIA FOR LATERAL RPM PLACEMENT
4. HATCHING ALONG OUTSIDE EDGES OF THE TRAVELED WAY SHALL EXTEND TO THE EDGE OF PAVEMENT (E.O.P.)

BY	REVISION	DATE
RCA	REM RPM FM DET C&D (WT)	07-01-25
RCA	RPM NOTE AND DEPICTION	07-01-24
ACP	REVISED TO 6'' DYL	07-01-24
	ADDED GN 3, 4, & 5	07-01-24
	REV. GN 1 FOR 6'' STRIPING	07-01-24
T.OPS.	REVISED GN 1	11-21-08
T.OPS.	REVISED GN 1	6-25-04

DEPARTMENT OF TRANSPORTATION
STATE OF GEORGIA

CONSTRUCTION DETAIL

DETAILS OF PAVEMENT MARKING HATCHING

JANUARY 2000

NOT TO SCALE

NUMBER T-14

STATE	PROJECT NUMBER	SHEET NO.	TOTAL SHEETS
GA.			

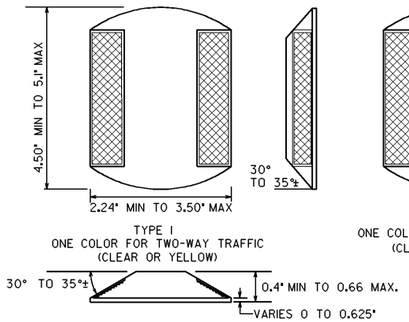

TYPE 1
ONE COLOR FOR TWO-WAY TRAFFIC
(CLEAR OR YELLOW)

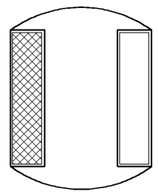

TYPE 2
ONE COLOR FOR ONE-WAY TRAFFIC
(CLEAR, YELLOW OR RED)

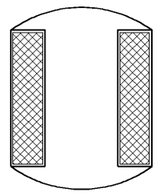

TYPE 3
TWO COLOR FOR ONE-WAY TRAFFIC
(ANY COMBINATION OF CLEAR, YELLOW OR RED)

RAISED REFLECTIVE MARKERS

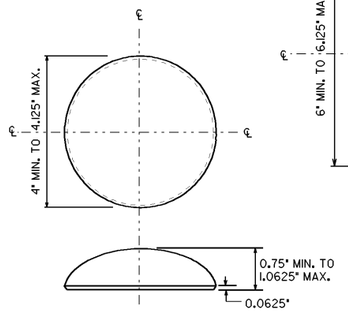

TYPE 4
OPAQUE CERAMIC MARKER
(WHITE, YELLOW OR BLACK)

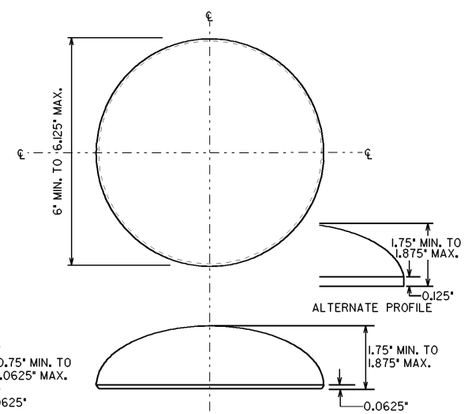

TYPE 4
OPAQUE CERAMIC MARKER
(WHITE, YELLOW OR BLACK)

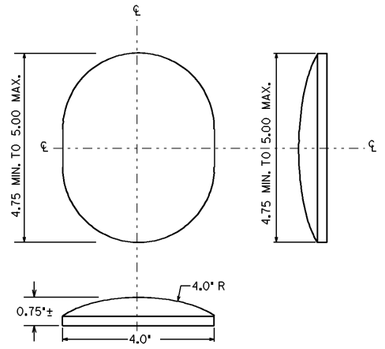

TYPE 5
OVAL CERAMIC MARKER
(NON-REFLECTIVE WHITE, YELLOW OR BLACK)

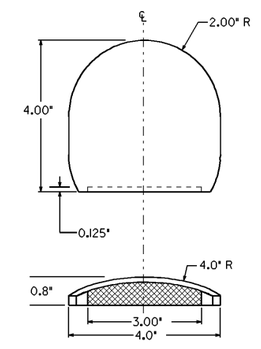

TYPE 6
REFLECTIVE CERAMIC MARKER
(REFLECTIVE WHITE, YELLOW OR BLACK)

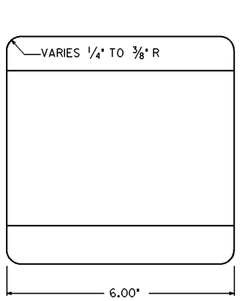

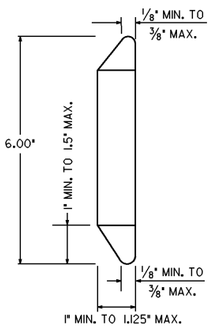

TYPE 7
NON-REFLECTIVE MARKER
(WHITE OR YELLOW)

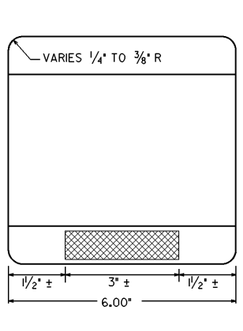

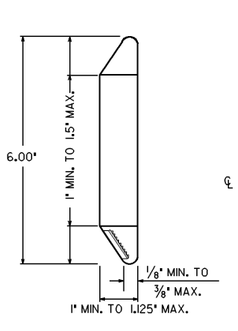

TYPE 8
REFLECTIVE MARKER
(WHITE OR YELLOW)

CERAMIC JIGGLE BAR MARKER

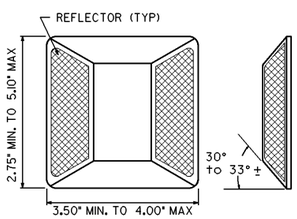

TYPE 11
ONE COLOR FOR TWO-WAY TRAFFIC
(CLEAR OR YELLOW)

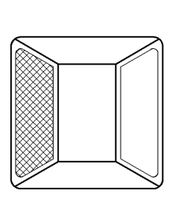

TYPE 12
ONE COLOR FOR ONE-WAY TRAFFIC
(CLEAR, YELLOW, OR RED)

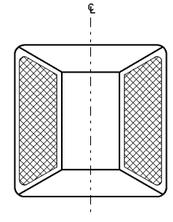

TYPE 13
TWO COLOR FOR ONE-WAY TRAFFIC
(ANY COMBINATION OF CLEAR, YELLOW, OR RED)

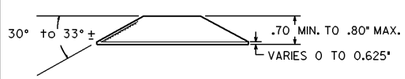

ALTERNATE RAISED REFLECTIVE MARKERS

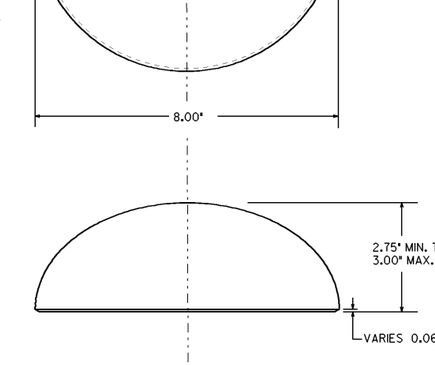

TYPE 9
NON-REFLECTIVE
(WHITE OR YELLOW)

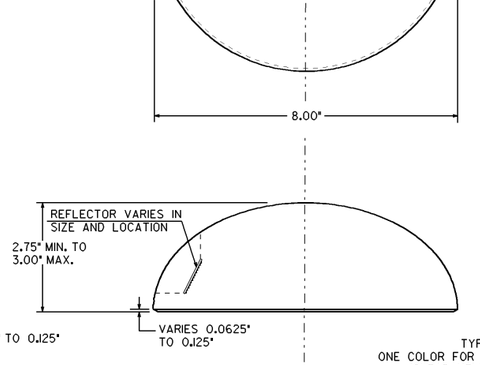

TYPE 10
REFLECTIVE
ONE REFLECTOR
(WHITE OR YELLOW)

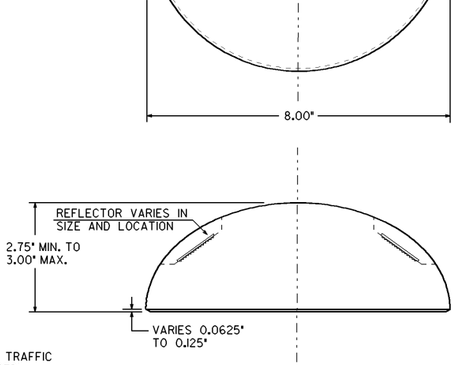

TYPE 10
REFLECTIVE
TWO REFLECTOR
(WHITE OR YELLOW)

TYPE 12
ONE COLOR FOR ONE-WAY TRAFFIC
(CLEAR, YELLOW, OR RED)

CERAMIC CHANNEL MARKER

GENERAL NOTES:

1. SPECIFICATIONS: GEORGIA STANDARD, CURRENT EDITION, AND SUPPLEMENTS THERE TO.
2. THE CONTRACTOR SHALL USE RAISED PAVEMNT MAKER SOURCES AS LISTED IN QPL 76.
3. COLORS FOR REFLECTIVE ELEMENTS SHALL BE EITHER CLEAR, YELLOW, OR RED AS SPECIFIED.
4. THE SHELL OF THE REFLECTIVE MARKERS SHALL BE OF ONE COLOR OR OF A COMBINATION OF TWO COLORS, WHICH SHALL BE THE SAME AS THE REFLECTIVE ELEMENT.
5. THE SURFACE OF OPAQUE CERAMIC MARKERS SHALL BE GLAZED AND OF THE COLOR SPECIFIED IN THE PLANS WITH A WHITE, VITREOUS, CERAMIC BASE.
6. COLORS FOR ALL RAISED PAVEMENT MARKERS SHALL BE AS SPECIFIED IN THE PLANS.

DATE	REVISIONS
9-22-11	REV. DIMENSIONS, ADDED
	NOTES TO MARKERS
	AND REV. GEN. NOTES.

GEORGIA DEPARTMENT OF TRANSPORTATION
OFFICE OF TRAFFIC SAFETY & DESIGN

NO SCALE JANUARY 2000

DETAILS OF
RAISED PAVEMENT MARKERS

T-15C

PCPRSH

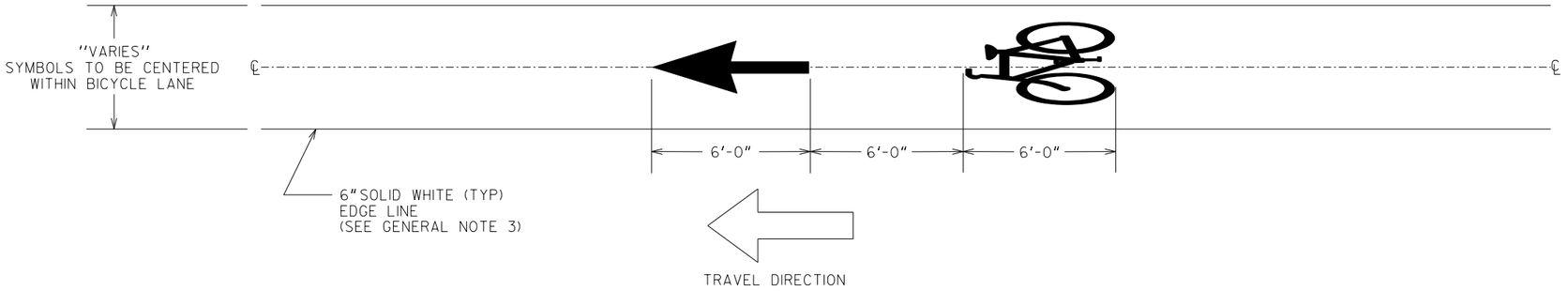

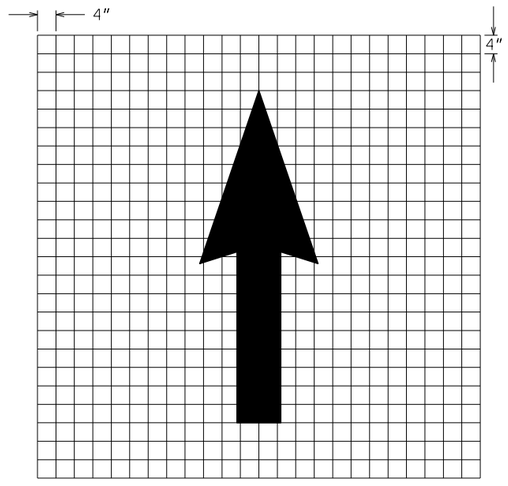

TYPE I ARROW (WHITE) - BICYCLE LANE

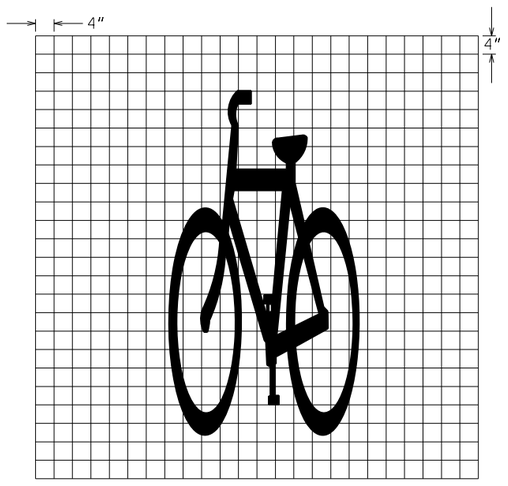

TYPE 4 SYMBOL (WHITE) - BICYCLE LANE

GENERAL NOTES:

1. BICYCLE LANE SYMBOLS SHALL BE PLACED ON THE FAR SIDE OF EACH INTERSECTION 6 FEET BEYOND THE CROSS WALK OR END OF INTERSECTING ROAD RADII. ADDITIONAL SYMBOLS MAY BE SPECIFIED WITHIN THE PLANS/CONTRACT FOR LONG, UNINTERRUPTED SECTIONS OF ROADWAY BASED ON ENGINEERING JUDGEMENT.

2. ALL BICYCLE LANE PAVEMENT SYMBOLS SHALL BE HOT APPLIED PREFORMED PLASTIC (THERMOPLASTIC - 659) FOR BOTH ASPHALT AND CONCRETE PAVEMENTS.

3. MATERIAL FOR BIKE LANE EDGE LINES SHALL MATCH THAT OF THE THE OTHER LONGITUDINAL STRIPING SPECIFIED WITHIN THE PLANS/CONTRACT.

BY	REVISION	DATE
RWK	REV. SYMBOL PER '23 MUTCD	07-01-24
HAC	REV. PER '09 MUTCD MANUAL	3-30-16

DEPARTMENT OF TRANSPORTATION
STATE OF GEORGIA

CONSTRUCTION DETAIL

BICYCLE LANE PAVEMENT MARKINGS

JANUARY 2000
NOT TO SCALE

NUMBER
T-16

GDOT Georgia Department of Transportation | P. I. No. XXXXXXX

SHARED LANE ARROW PLACEMENT WITH NO STREET PARKING

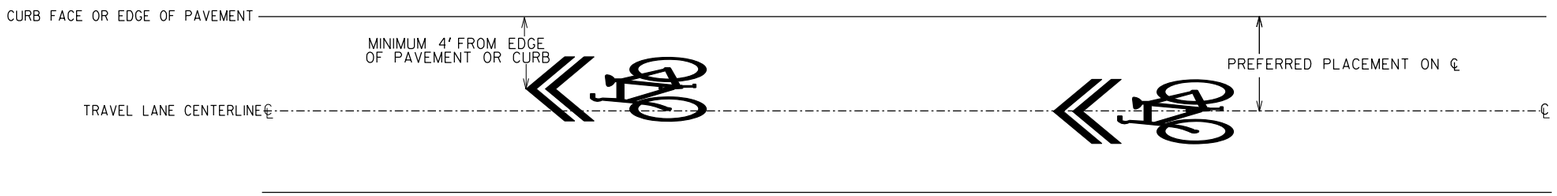

NOT TO SCALE

SHARED LANE ARROW PLACEMENT WITH ON-STREET* PARKING

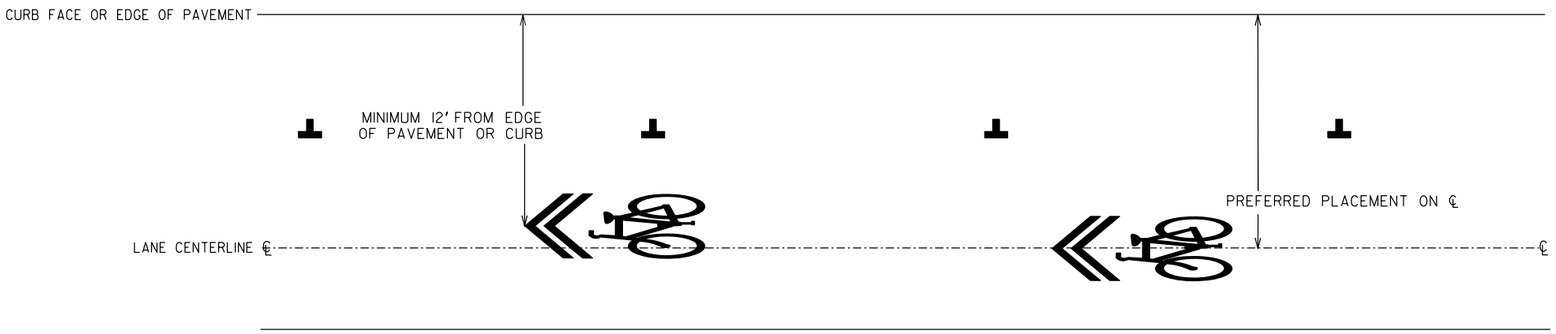

NOT TO SCALE
(* PARALLEL PARKING SHOWN, BUT PLACEMENT IS THE SAME FOR ANGLE PARKING)

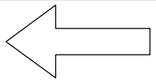

TRAVEL DIRECTION

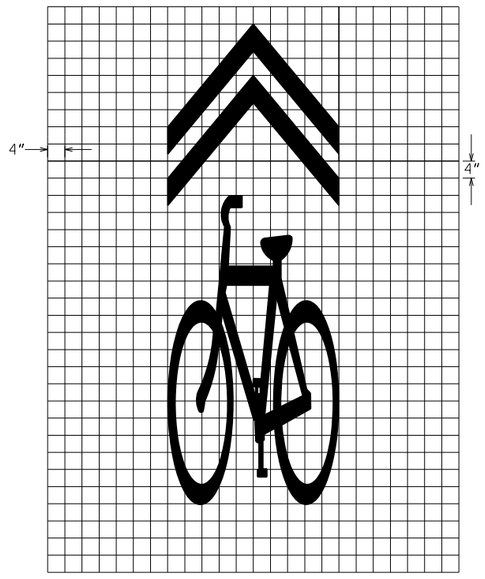

BIKE SHARED LANE SYMBOL (WHITE)

GENERAL NOTES:

1. SHARED LANE MARKINGS SHALL BE PLACED ON THE FAR SIDE OF EACH INTERSECTION 6 FEET BEYOND THE CROSS WALK OR END OF INTERSECTING ROAD RADII. ADDITIONAL SYMBOLS SHOULD BE PLACED NOT GREATER THAN EVERY 250 FEET THEREAFTER.
2. SHARED LANE MARKINGS SHALL NOT BE PLACED ON SHOULDERS OR IN DESIGNATED BIKE LANES.
3. ALL SHARED BICYCLE LANE PAVEMENT SYMBOLS SHALL BE HOT APPLIED PREFORMED PLASTIC (THERMOPLASTIC - 659) FOR BOTH ASPHALT AND CONCRETE PAVEMENTS.

BY	DATE	REVISION
RCA	07-01-24	MIN. OFFSET W/ PARKING

DEPARTMENT OF TRANSPORTATION
STATE OF GEORGIA

CONSTRUCTION DETAIL

DETAILS OF SHARED LANE PAVEMENT MARKING

MARCH 2016
NOT TO SCALE

NUMBER T-16A

GDOT Georgia Department of Transportation | P. I. No.

CONTIGUOUS / NON-BUFFERED LANE

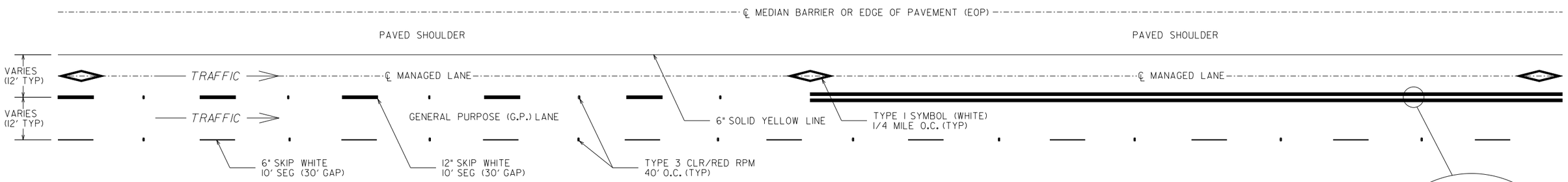

BUFFERED LANE

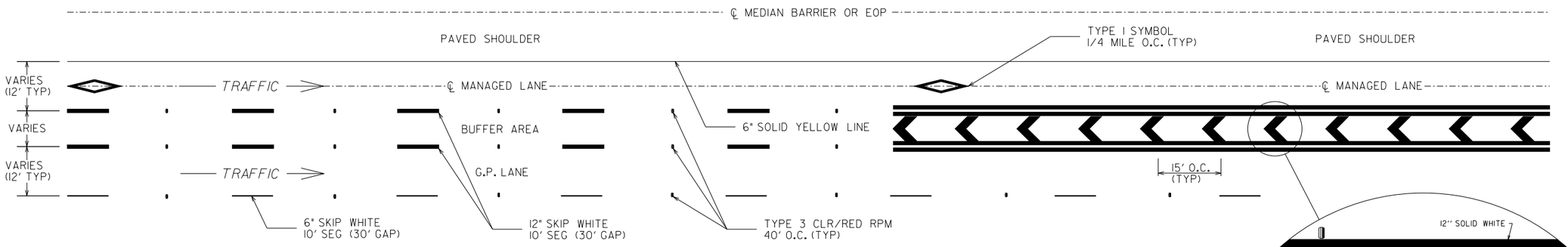

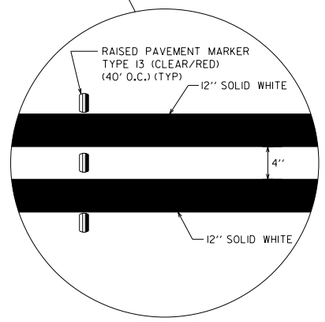

INSET A

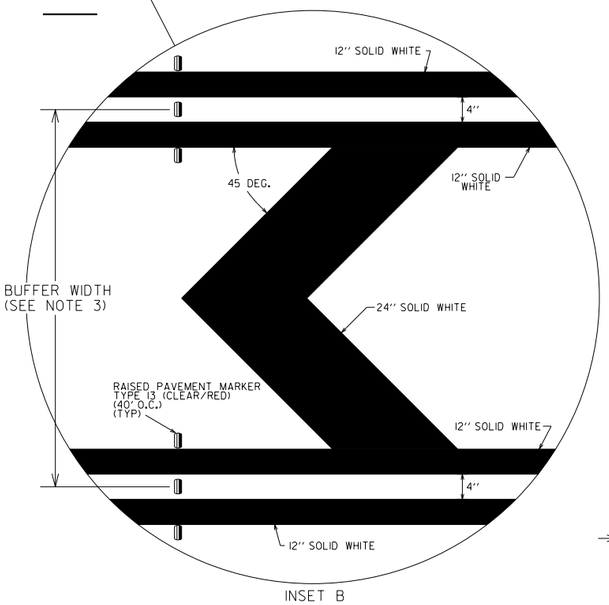

INSET B

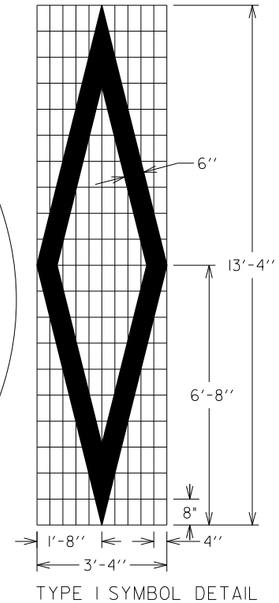

TYPE I SYMBOL DETAIL

ONE-WAY BARRIER-SEPARATED LANES

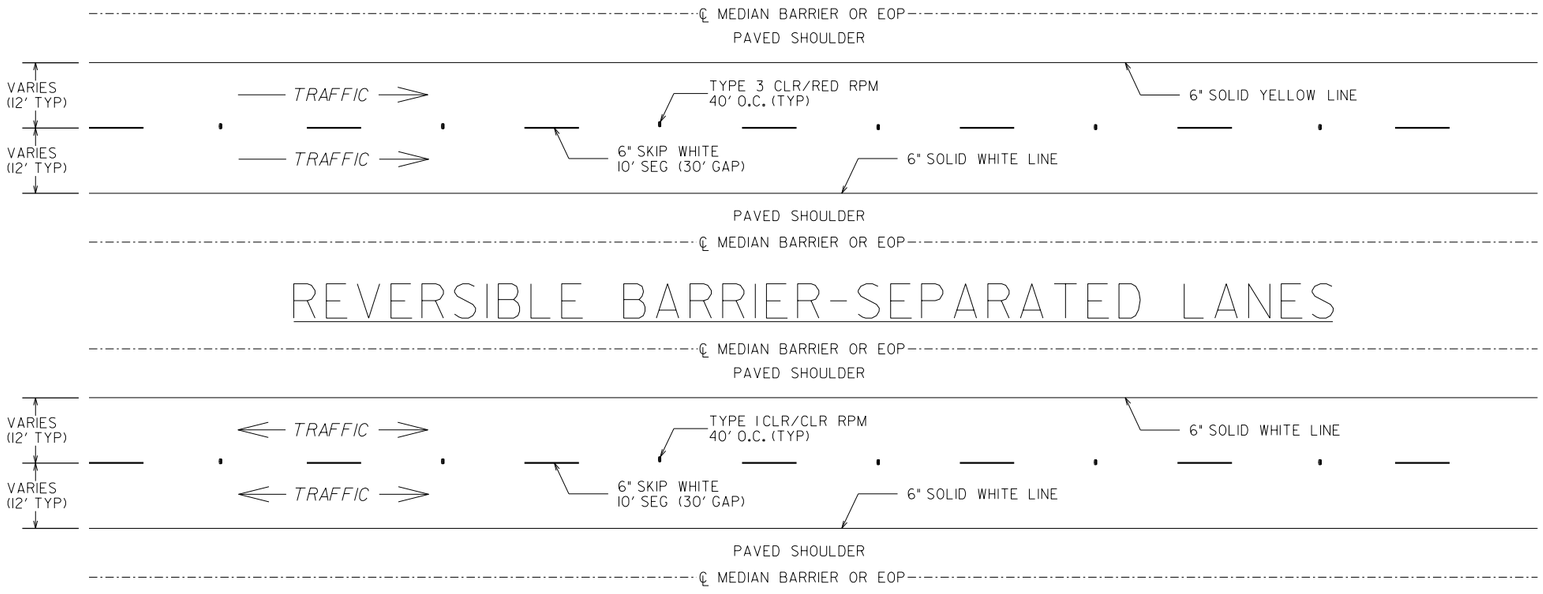

REVERSIBLE BARRIER-SEPARATED LANES

GENERAL NOTES:
1. HOV TYPE I SYMBOL ONLY REQ'D IN HOV LANES, AND MAY BE REMOVED OR SUBSTITUTED WITH "EXPRESS" TYPE 20 WORD (SEE DET. T-13A) IN OTHER MANAGED LANES.
2. PAVEMENT MARKINGS ON CONCRETE SHALL INCLUDE CONTRAST PER DETAIL T-11B.
3. CHEVRON MARKINGS FOR BUFFER-SEPARATED LANES TO BE USED WHEN BUFFER IS GREATER THAN 4' IN WIDTH.
4. CLEAR FACE OF TYPE 3 OR 13 CLR/RED RPMS SHALL BE ORIENTED TOWARDS NORMAL APPROACHING TRAFFIC.

BY	DATE	REVISION
RCA	07-01-25	REV'D RPM IN INSET A/B TO TP 13 & ADD'D TO GN4
RCA	07-01-24	MAJOR REV.; ADDT'L FIGS.
ACP	07-01-24	6" STRIPING WIDTH

DEPARTMENT OF TRANSPORTATION
STATE OF GEORGIA

CONSTRUCTION DETAIL

MANAGED LANE PAVEMENT MARKINGS

JANUARY 2000
NOT TO SCALE

NUMBER T-17A

GDOT Georgia Department of Transportation | P.I. No. XXXXXXX

TAPERED EXIT

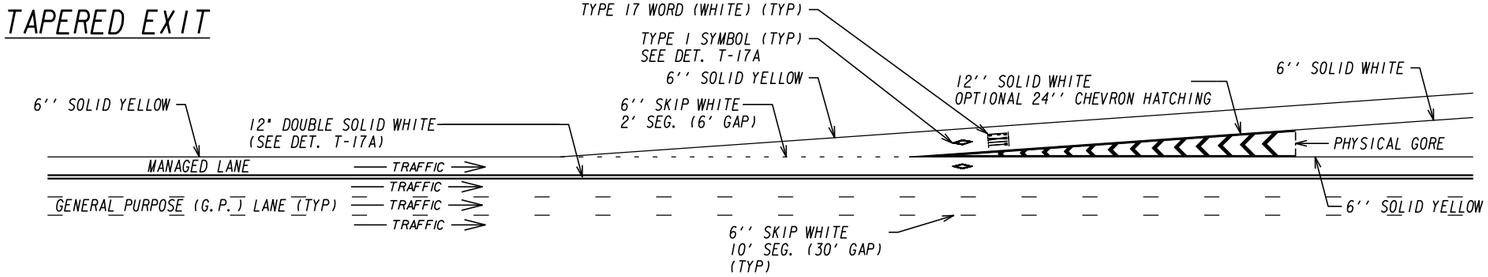

TAPERED ENTRANCE

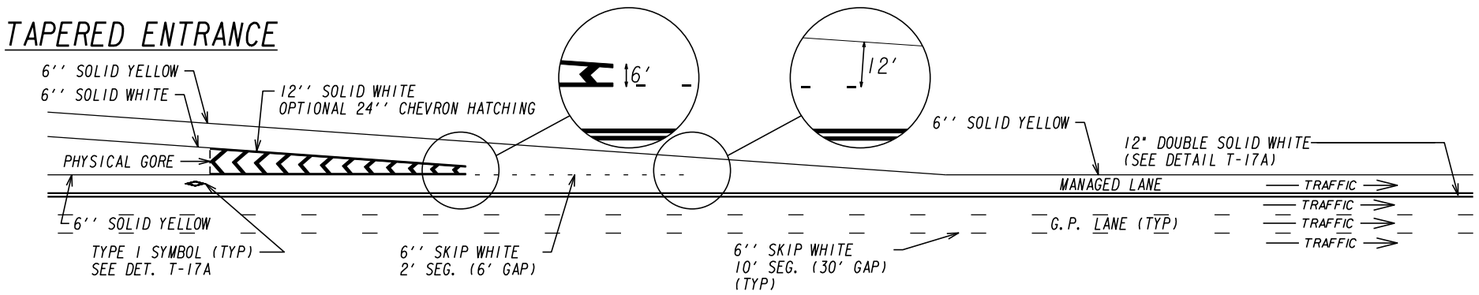

PARALLEL ENTRANCE

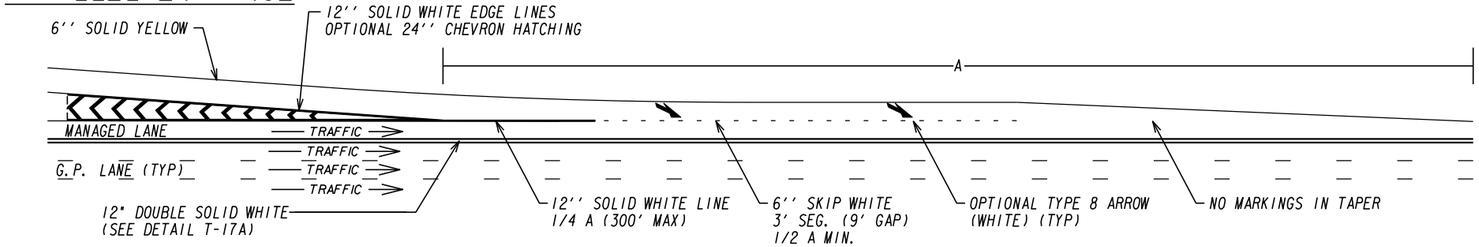

ONE-WAY BARRIER SEPARATED DIVERGE

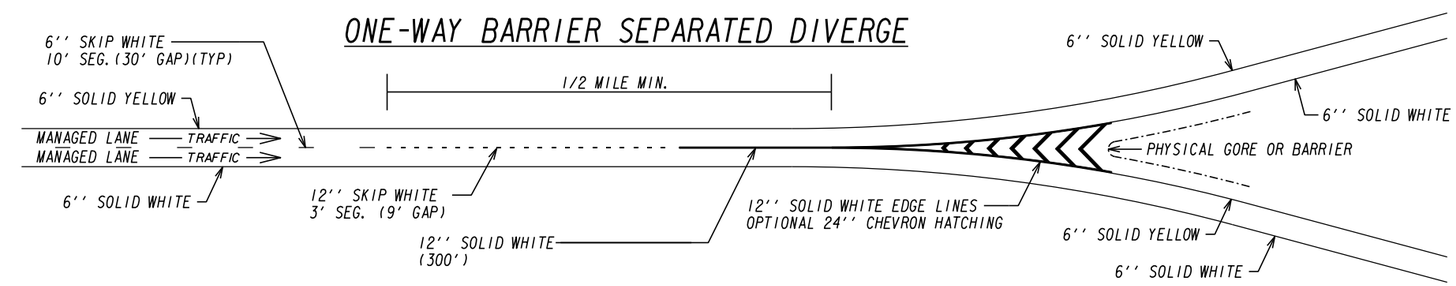

REVERSIBLE BARRIER SEPARATED MERGE/DIVEREGE

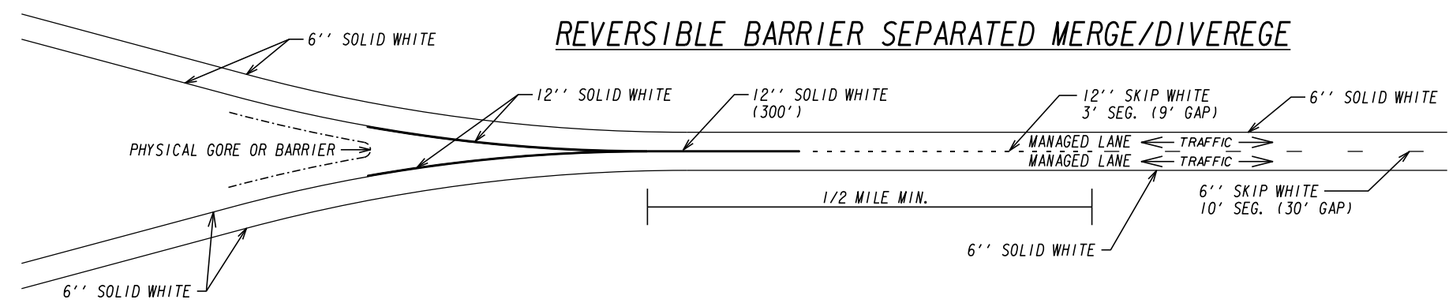

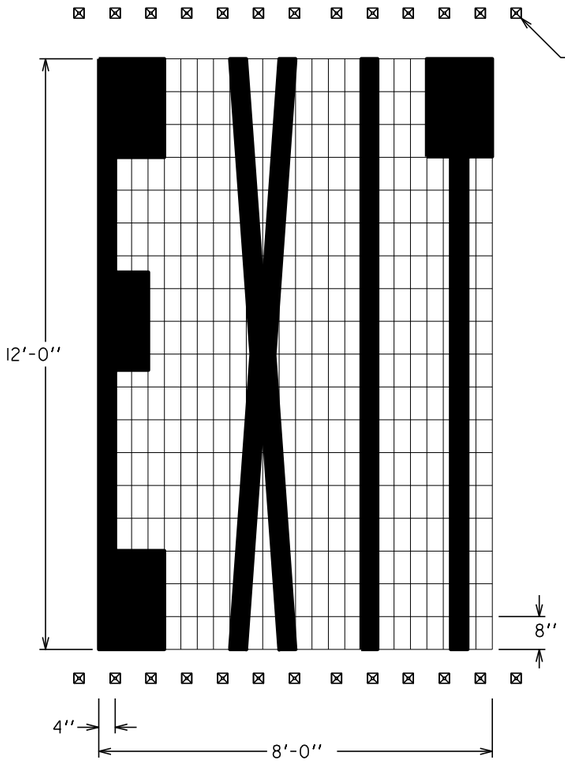

TYPE 17 WORD DETAIL

AREA = 27.7 FT²

GENERAL NOTES:

1. REFER TO DETAIL T-17A FOR ADDITIONAL DETAILS OF PAVEMENT MARKING TREATMENTS ALONG MANAGED LANES
2. PAVEMENT MARKINGS ON CONCRETE SHALL INCLUDE CONTRAST PER DETAIL T-11B.
3. REFER TO DETAILS T-11B AND T-17A FOR RPM PLACEMENT.
4. HOV TYPE I SYMBOL ONLY REQ'D IN HOV LANES, AND MAY BE REMOVED OR SUBSTITUTED WITH ''EXPRESS'' TYPE 20 WORD (SEE DET. T-13A) IN OTHER MANAGED LANES.
5. OTHER OPTIONAL PAVEMENT MARKINGS SUCH AS ROUTE SHIELDS ARE NOT SHOWN. REFER TO DETAIL T-13D AND/OR CONTRACT AND PLANS FOR SHIELD DESIGN AND PLACEMENT.
6. LEFT-HAND ENTRANCES AND EXITS SHOWN; RIGHT-HAND ENTRANCES AND EXITS ARE MIRROR IMAGE.
7. FOR OPTIONAL 24" WHITE CHEVRON HATCHING, REFER TO DETAIL T-14.
8. THE CLEAR FACE OF TYPE 3 CLR/RED RPMS SHALL BE ORIENTED TOWARDS NORMAL APPROACHING TRAFFIC.

BY	REVISION	DATE
RCA	MAJOR CHANGES AND NEW FIGS	07-01-24
ACP	REVISED 6" STRIPING	07-01-24
T.OPS.	REVISED STRIPE CALLOUT	09-16-09
T.OPS.	ADDED TP 17 WORD WITH RPMS	11-04-08
T.OPS.	DEL. SKIP LINES IN HOV BUFFER	9-26-01

DEPARTMENT OF TRANSPORTATION
STATE OF GEORGIA

CONSTRUCTION DETAIL

DETAILS OF
MANAGED LANE GORE AREA
PAVEMENT MARKING

JANUARY 2000
NOT TO SCALE

NUMBER
T-17B

STATE	PROJECT NUMBER	SHEET NO.	TOTAL SHEETS
GA.			

REQ'D. 6.22 SQ. YDS.- WHITE *
(PER EACH PARKING SPACE)

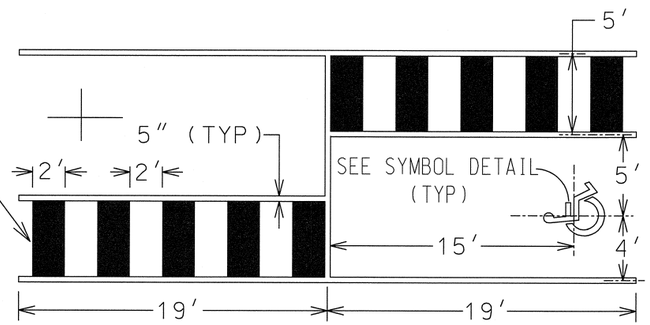

PERPENDICULAR PARKING

REQ'D. 4.15 SQ. YDS.- WHITE *
(PER EACH PARKING SPACE)

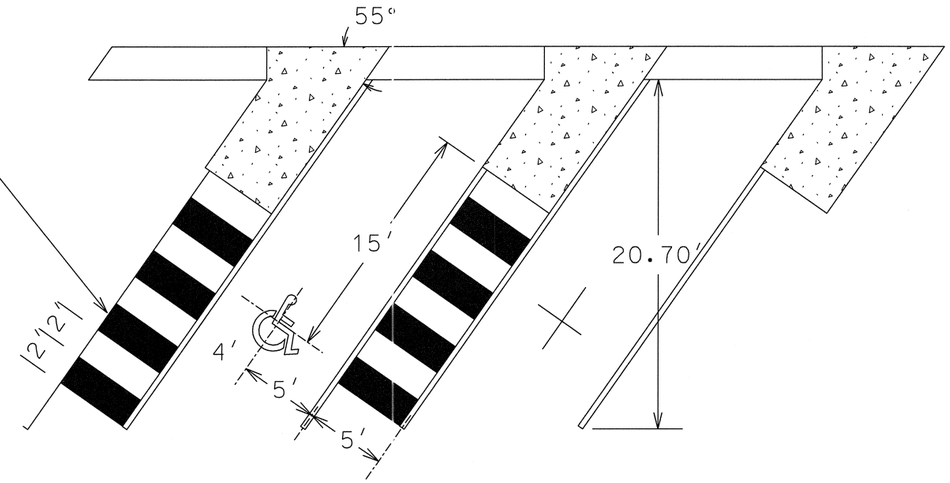

SINGLE ROW 55° ANGULAR PARKING
WITH RAMP

REQ'D. 5.19 SQ. YDS.- WHITE *
(PER EACH PARKING SPACE)

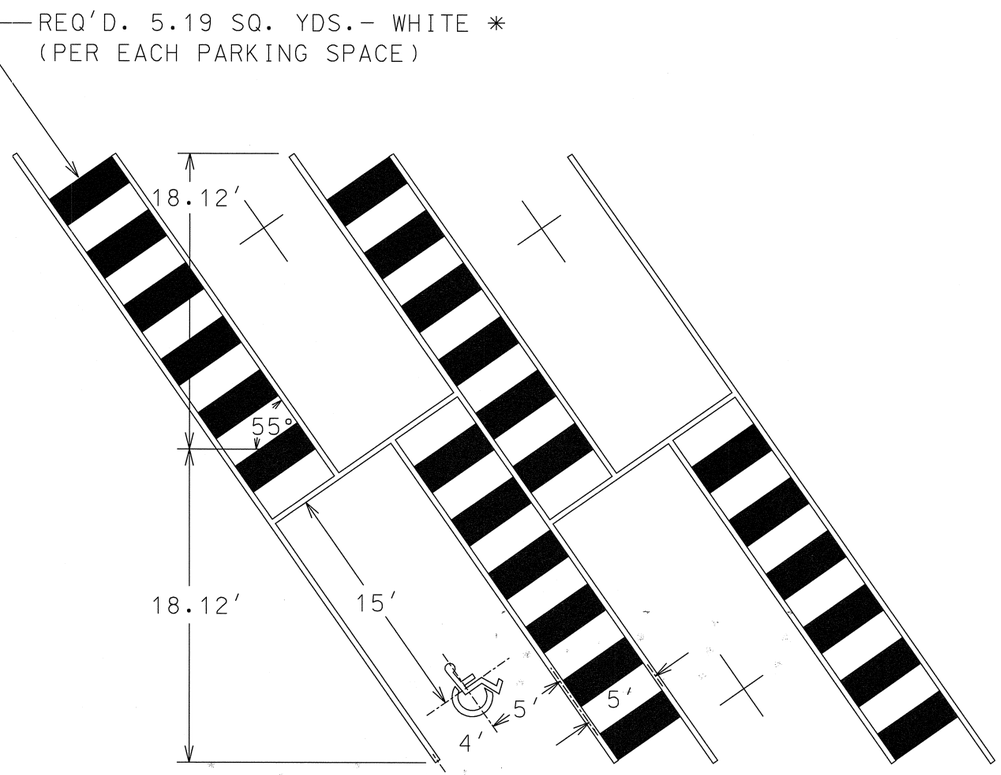

DOUBLE ROW 55° ANGULAR PARKING

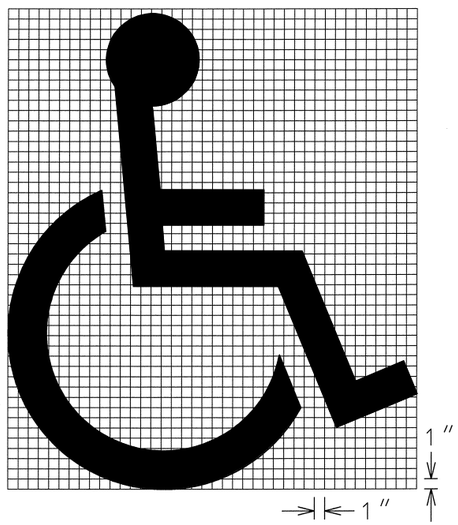

HANDICAPPED SYMBOL DETAIL
- NO SCALE -

* SQ. YDS. STRIPING MEASUREMENT SHALL BEGIN AND END WITH A MARKED STRIPE AND SHALL NOT INCLUDE PARKING LANE LINES. PARKING LANE LINES SHALL BE PAID FOR PER LINEAR FOOT.

DATE	REVISIONS

GEORGIA DEPARTMENT OF TRANSPORTATION
OFFICE OF TRAFFIC SAFETY & DESIGN
NO SCALE JANUARY 2000
DETAILS OF
HANDICAPPED PAVEMENT
MARKINGS
T-18

STATE	PROJECT NUMBER	SHEET NO.	TOTAL SHEETS
GA.			

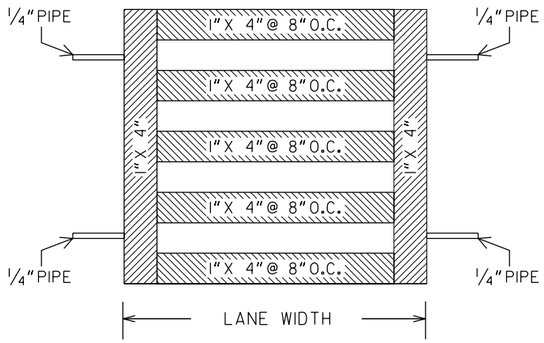

RUMBLE STRIP FORM

ROUNDABOUT

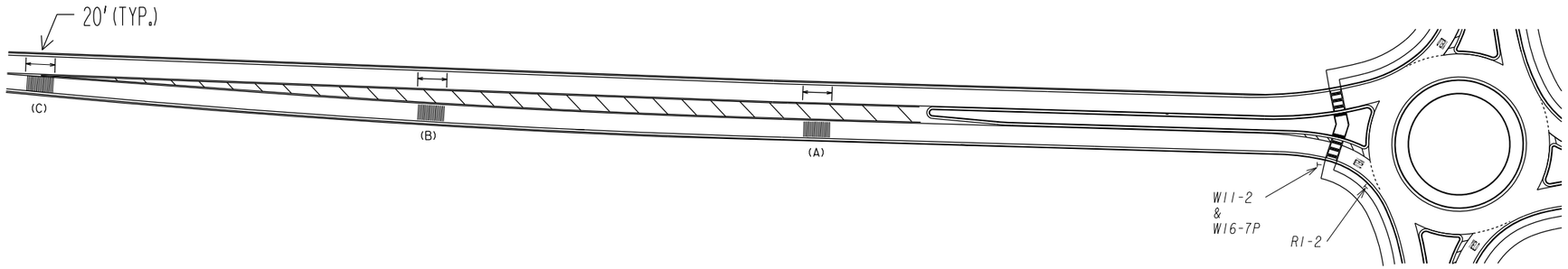

GENERAL NOTES

1. FORM SHALL BE FULL WIDTH OF LANE. (NOTE: NOT TO EXCEED CENTER LINE OR EDGE LINE PAVEMENT MARKINGS INCLUDING, IF APPLICABLE, RAISED PAVEMENT MARKERS). FOR MULTILANE APPROACHES, RUMBLE STRIPS SHALL BE PLACED ACROSS BOTH LANES

2. SEE SECTION 429 OF THE CURRENT EDITION OF THE STANDARD SPECIFICATIONS CONSTRUCTION OF TRANSPORTATION SYSTEMS FOR MATERIALS, CONSTRUCTION REQUIREMENTS, MEASUREMENT, AND PAYMENT.

3. FORM SHOWN FOR REQUIRED SIZE AND SPACING OF RUMBLE STRIPS. OTHER MATERIALS FOR CONSTRUCTION OF FORM MAY BE USED AS APPROVED BY THE ENGINEER.

4. THERMOPLASTIC REFLECTORIZED PAVEMENT MARKING COMPOUND RUMBLE STRIPS SHOULD BE USED ON APPROACHES WITH 50 MPH OR GREATER SPEED LIMIT. FOR APPROACHES WITH SPEED LIMITS LESS THAN 50 MPH THERMOPLASTIC REFLECTORIZED PAVEMENT MARKING COMPOUND MAY BE USED IN LIEU OF ASPHALTIC CONCRETE IF APPROVED BY THE DISTRICT MAINTENANCE ENGINEER.

STOP CONTROLLED INTERSECTION

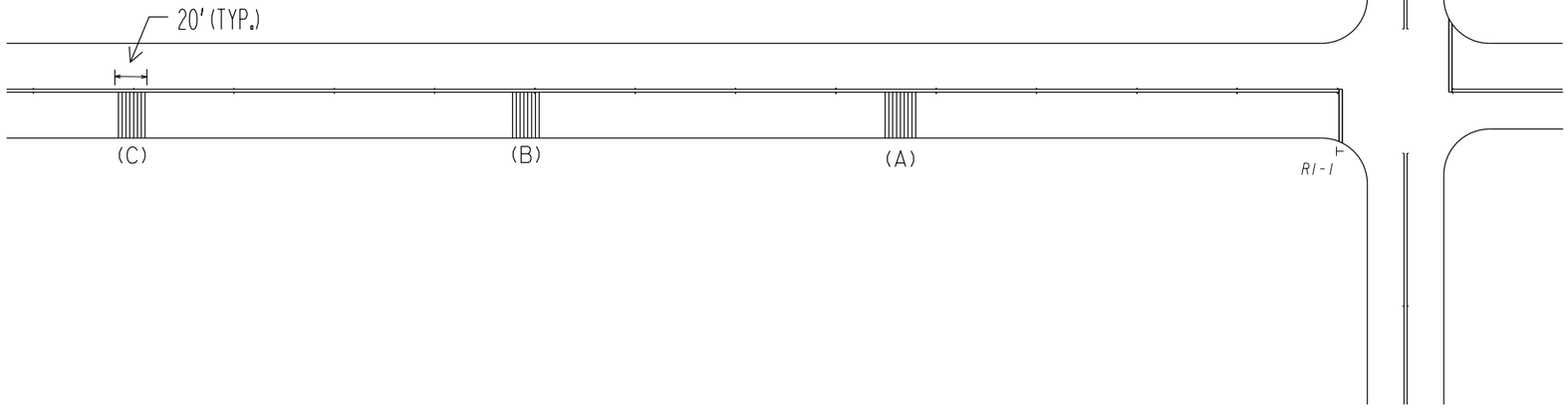

SPACING DIMENSIONS FROM STOP BAR/YIELD LINE			
SPEED LIMIT	(A)	(B)	(C)
40 MPH	200'	325'	475'
45 MPH		325'	550'
50 MPH		375'	625'
55 MPH		450'	700'
60 MPH	300'	500'	775'
65 MPH		550'	850'

DRAWINGS ARE NOT TO SCALE

BY	DATE	REVISION
ACP	11-04-20	ADJUSTED RUMBLE STRIP SPACING
ACP		ADD ROUNDABOUT DTL.
		ADJUSTED W3-1a SIGN LOC.
	4-08-03	CHANGED LANE WIDTH OF
ACP		RUMBLE STRIP. GEN. NOTES
	3-31-00	CHANGED R1-1 SIGN TO 36 IN

DESIGNED ____
DRAWN ____
TRACED ____
CHECKED ____

DEPARTMENT OF TRANSPORTATION
STATE OF GEORGIA

CONSTRUCTION DETAILS

RUMBLE STRIPS: ROUNDABOUTS AND STOP CONTROLLED INTERSECTIONS

NO SCALE JANUARY 2000

NUMBER T-19

STATE	PROJECT NUMBER	SHEET NO.	TOTAL SHEETS
GA.			

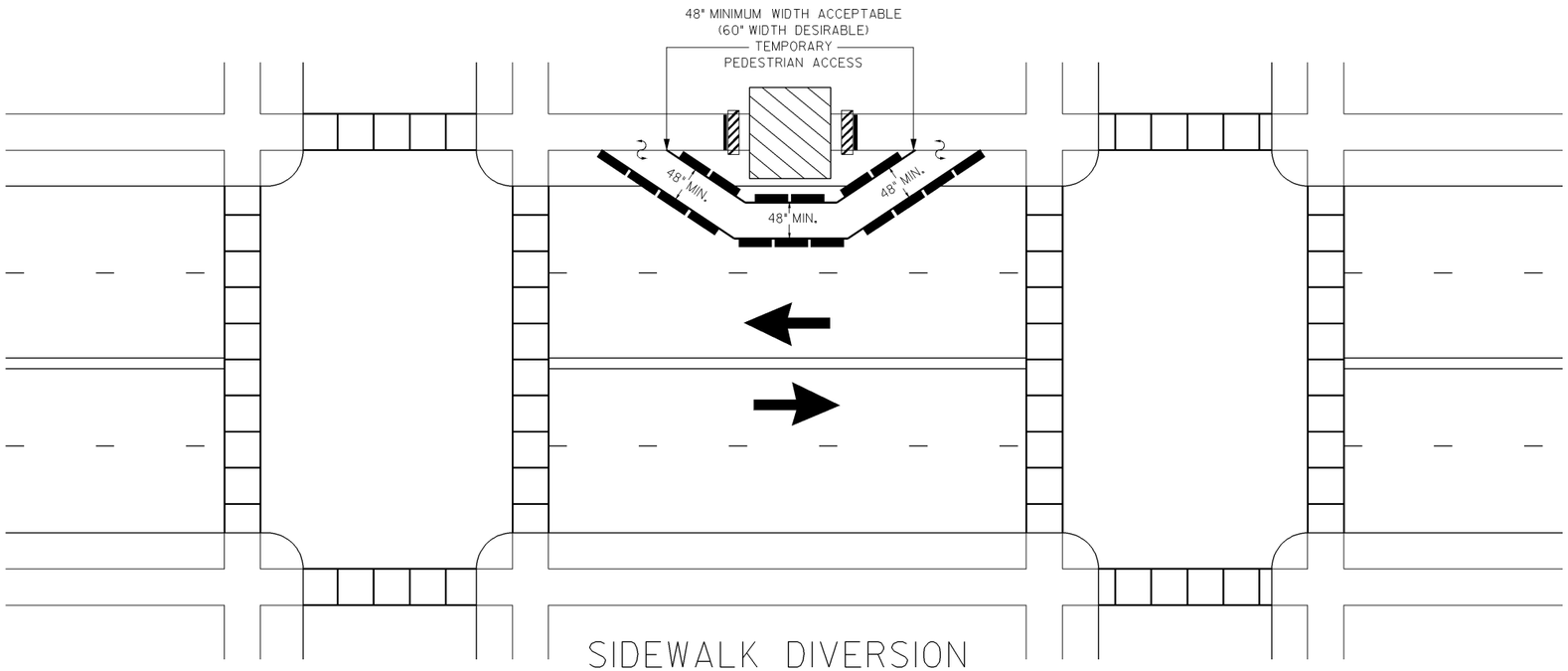

SIDEWALK DIVERSION
THROUGH ON-STREET PAVEMENT

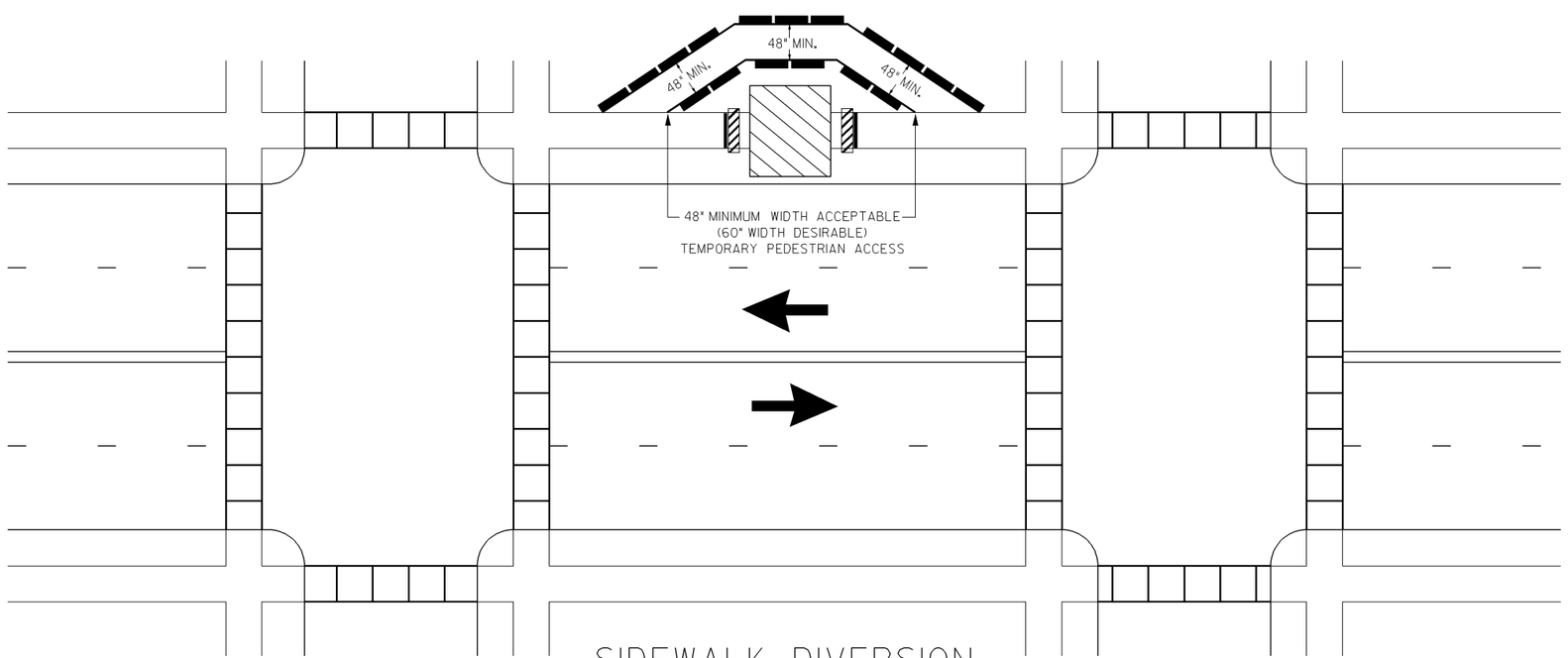

SIDEWALK DIVERSION
BEHIND CLOSED SIDEWALK

GENERAL NOTES:

1. CLOSURES OF EXISTING PEDESTRIAN FACILITIES SHALL HAVE PRIOR WRITTEN APPROVAL OF THE ENGINEER.

2. ALL TRAFFIC CONTROL DEVICES SHALL BE MADE AND ERECTED IN ACCORDANCE WITH THE DETAILS SHOWN ON THE PLANS, THE MUTCD, THE GEORGIA STANDARD SPECIFICATIONS, AND/OR SPECIAL PROVISIONS. (SEE SECTION 150) DETECTABLE EDGING AND DETECTABLE BARRIERS SHALL BE IN COMPLIANCE WITH THE MUTCD AND ADA REGULATIONS.

3. SIGNS AND OTHER DEVICES SHALL BE PLACED SUCH THAT THEY DO NOT NARROW OR RESTRICT ANY PEDESTRIAN PASSAGE TO LESS THAN 48 INCHES (4 FT) IN WIDTH. SIGNS AND OTHER DEVICES MOUNTED LOWER THAN SEVEN (7) FEET ABOVE THE TEMPORARY PEDESTRIAN WALKWAY SHALL NOT PROJECT MORE THAN FOUR (4) INCHES INTO THE ACCESSIBLE PEDESTRIAN FACILITIES.

4. NO PAYMENT WILL BE MADE FOR TEMPORARY WALKWAYS WITH DETECTABLE EDGING WHERE EXISTING PAVEMENTS OR EXISTING EDGING (THAT MEETS THE REQUIREMENTS OF MUTCD) ARE UTILIZED FOR THE TEMPORARY WALKWAY. PAYMENT FOR TEMPORARY DETECTABLE EDGING, INCLUDING APPROVED BARRIERS AND CHANNELIZING DEVICES, THAT ARE INSTALLED ON EXISTING PAVEMENTS SHALL BE INCLUDED IN TRAFFIC CONTROL-LUMP SUM.

5. REGARDLESS OF THE MATERIALS USED, THE CONTRACTOR SHALL CONSTRUCT TEMPORARY WALKWAYS (WITH DETECTABLE EDGING) OF SUFFICIENT THICKNESS AND DURABILITY TO WITHSTAND THE INTENDED USE FOR THE DURATION OF THE CONSTRUCTION PROJECT (SEE SECTION 150 FOR MINIMUM DESIGN PARAMETERS). THE USE OF COMPACTED SOILS, SANDS, CRUSHED STONE, OR ASPHALTIC PAVEMENT MILLINGS SHALL NOT BE USED AS A SURFACE COURSE FOR TEMPORARY PEDESTRIAN WALKWAYS.

6. A 60-INCH MINIMUM WIDTH PEDESTRIAN FACILITY SHOULD BE MAINTAINED WHEN POSSIBLE. WHEN A 60-INCH MINIMUM WIDTH CANNOT BE ACHIEVED, A MINIMUM WIDTH OF 48 INCHES SHALL BE PROVIDED WITH PASSING ZONES (60 INCHES BY 60 INCHES) AT LEAST EVERY 200 FEET.

7. TEMPORARY AUDIBLE INFORMATION DEVICES SHOULD BE USED WHERE MIDBLOCK CLOSINGS AND CHANGED CROSSWALK AREAS CAUSE INADEQUATE COMMUNICATION TO BE PROVIDED TO PEDESTRIANS WHO HAVE VISUAL DISABILITIES.

8. WHEN CURB CUT RAMP IS NOT PRESENT, TEMPORARY OR PERMANENT CURB CUT RAMP WILL BE PROVIDED BY CONTRACTOR.

STANDARD LEGEND	
DETECTABLE BARRIER	CURB CUT RAMP WITH DETECTABLE SURFACE WARNING
DETECTABLE EDGING	SIGN
WORK SITE	DIRECTION OF TRAFFIC LANE(S)

REVISED TITLE BLOCK	10-16-08
REVISION	DATE
GLO	
BY	

DEPARTMENT OF TRANSPORTATION
STATE OF GEORGIA

CONSTRUCTION DETAIL
TRAFFIC CONTROL
PEDESTRIAN ACCESSIBILITY
AROUND WORKZONE -
SIDEWALK DIVERSION

NO SCALE — SEPTEMBER 2008

T-20

STATE	PROJECT NUMBER	SHEET NO.	TOTAL SHEETS
GA.			

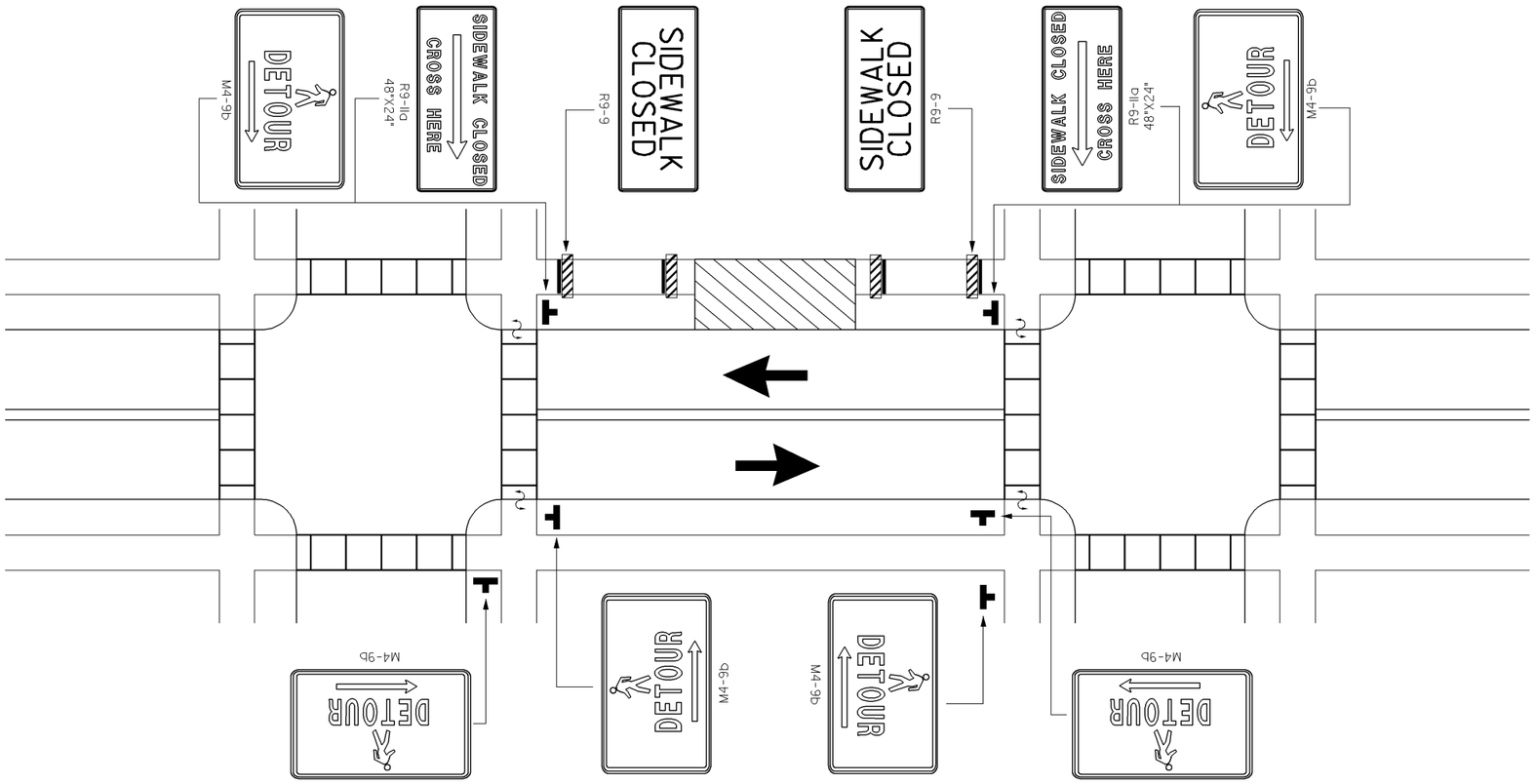

SIDEWALK DETOUR

GENERAL NOTES:

1. CLOSURES OF EXISTING PEDESTRIAN FACILITIES SHALL HAVE PRIOR WRITTEN APPROVAL OF THE ENGINEER.

2. ALL TRAFFIC CONTROL DEVICES SHALL BE MADE AND ERECTED IN ACCORDANCE WITH THE DETAILS SHOWN ON THE PLANS, THE MUTCD, THE GEORGIA STANDARD SPECIFICATIONS, AND/OR SPECIAL PROVISIONS. (SEE SECTION 150) DETECTABLE EDGING AND DETECTABLE BARRIERS SHALL BE IN COMPLIANCE WITH THE MUTCD AND ADA REGULATIONS.

3. SIGNS AND OTHER DEVICES SHALL BE PLACED SUCH THAT THEY DO NOT NARROW OR RESTRICT ANY PEDESTRIAN PASSAGE TO LESS THAN 48 INCHES (4 FT) IN WIDTH. SIGNS AND OTHER DEVICES MOUNTED LOWER THAN SEVEN (7) FEET ABOVE THE TEMPORARY PEDESTRIAN WALKWAY SHALL NOT PROJECT MORE THAN FOUR (4) INCHES INTO THE ACCESSIBLE PEDESTRIAN FACILITIES.

4. NO PAYMENT WILL BE MADE FOR TEMPORARY WALKWAYS WITH DETECTABLE EDGING WHERE EXISTING PAVEMENTS OR EXISTING EDGING (THAT MEETS THE REQUIREMENTS OF MUTCD) ARE UTILIZED FOR THE TEMPORARY WALKWAY. PAYMENT FOR TEMPORARY DETECTABLE EDGING, INCLUDING APPROVED BARRIERS AND CHANNELIZING DEVICES, THAT ARE INSTALLED ON EXISTING PAVEMENTS SHALL BE INCLUDED IN TRAFFIC CONTROL-LUMP SUM.

5. REGARDLESS OF THE MATERIALS USED, THE CONTRACTOR SHALL CONSTRUCT TEMPORARY WALKWAYS (WITH DETECTABLE EDGING) OF SUFFICIENT THICKNESS AND DURABILITY TO WITHSTAND THE INTENDED USE FOR THE DURATION OF THE CONSTRUCTION PROJECT (SEE SECTION 150 FOR MINIMUM DESIGN PARAMETERS). THE USE OF COMPACTED SOILS, SANDS, CRUSHED STONE, OR ASPHALTIC PAVEMENT MILLINGS SHALL NOT BE USED AS A SURFACE COURSE FOR TEMPORARY PEDESTRIAN WALKWAYS.

6. A 60-INCH MINIMUM WIDTH PEDESTRIAN FACILITY SHOULD BE MAINTAINED WHEN POSSIBLE. WHEN A 60-INCH MINIMUM WIDTH CANNOT BE ACHIEVED, A MINIMUM WIDTH OF 48 INCHES SHALL BE PROVIDED WITH PASSING ZONES (60 INCHES BY 60 INCHES) AT LEAST EVERY 200 FEET.

7. TEMPORARY AUDIBLE INFORMATION DEVICES SHOULD BE USED WHERE MIDBLOCK CLOSINGS AND CHANGED CROSSWALK AREAS CAUSE INADEQUATE COMMUNICATION TO BE PROVIDED TO PEDESTRIANS WHO HAVE VISUAL DISABILITIES.

8. WHEN CURB CUT RAMP IS NOT PRESENT, TEMPORARY OR PERMANENT CURB CUT RAMP WILL BE PROVIDED BY CONTRACTOR.

STANDARD LEGEND

- DETECTABLE BARRIER
- DETECTABLE EDGING
- WORK SITE
- CURB CUT RAMP WITH DETECTABLE SURFACE WARNING
- SIGN
- DIRECTION OF TRAFFIC LANE(S)

GLO	REVISED TITLE BLOCK	10-16-08	DEPARTMENT OF TRANSPORTATION STATE OF GEORGIA
BY	REVISION	DATE	CONSTRUCTION DETAIL TRAFFIC CONTROL PEDESTRIAN ACCESSIBILITY AROUND WORKZONE - SIDEWALK DETOUR NO SCALE — SEPTEMBER 2008
			T-21

STATE	PROJECT NUMBER	SHEET NO.	TOTAL SHEETS
GA.			

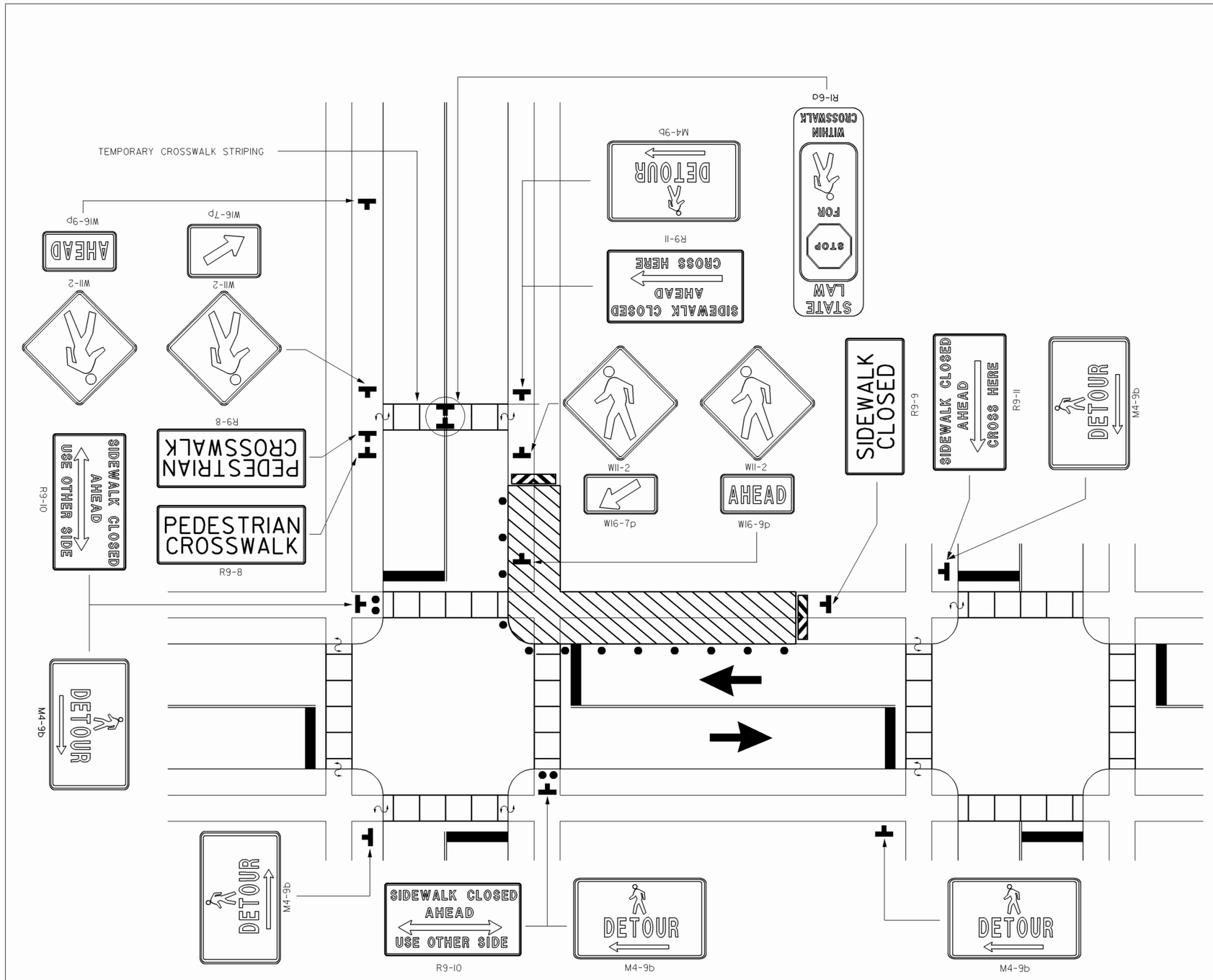

MIDBLOCK CROSSING AND SIDEWALK DETOUR

GENERAL NOTES:

1. CLOSURES OF EXISTING PEDESTRIAN FACILITIES SHALL HAVE PRIOR WRITTEN APPROVAL OF THE ENGINEER.

2. ALL TRAFFIC CONTROL DEVICES SHALL BE MADE AND ERECTED IN ACCORDANCE WITH THE DETAILS SHOWN ON THE PLANS, THE MUTCD, THE GEORGIA STANDARD SPECIFICATIONS, AND/OR SPECIAL PROVISIONS. (SEE SECTION 150) DETECTABLE EDGING AND DETECTABLE BARRIERS SHALL BE IN COMPLIANCE WITH THE MUTCD AND ADA REGULATIONS.

3. SIGNS AND OTHER DEVICES SHALL BE PLACED SUCH THAT THEY DO NOT NARROW OR RESTRICT ANY PEDESTRIAN PASSAGE TO LESS THAN 48 INCHES (4 FT) IN WIDTH. SIGNS AND OTHER DEVICES MOUNTED LOWER THAN SEVEN (7) FEET ABOVE THE TEMPORARY PEDESTRIAN WALKWAY SHALL NOT PROJECT MORE THAN FOUR (4) INCHES INTO THE ACCESSIBLE PEDESTRIAN FACILITIES.

4. NO PAYMENT WILL BE MADE FOR TEMPORARY WALKWAYS WITH DETECTABLE EDGING WHERE EXISTING PAVEMENTS OR EXISTING EDGING (THAT MEETS THE REQUIREMENTS OF MUTCD) ARE UTILIZED FOR THE TEMPORARY WALKWAY. PAYMENT FOR TEMPORARY DETECTABLE EDGING, INCLUDING APPROVED BARRIERS AND CHANNELIZING DEVICES, THAT ARE INSTALLED ON EXISTING PAVEMENTS SHALL BE INCLUDED IN TRAFFIC CONTROL-LUMP SUM.

5. REGARDLESS OF THE MATERIALS USED, THE CONTRACTOR SHALL CONSTRUCT TEMPORARY WALKWAYS (WITH DETECTABLE EDGING) OF SUFFICIENT THICKNESS AND DURABILITY TO WITHSTAND THE INTENDED USE FOR THE DURATION OF THE CONSTRUCTION PROJECT (SEE SECTION 150 FOR MINIMUM DESIGN PARAMETERS). THE USE OF COMPACTED SOILS, SANDS, CRUSHED STONE, OR ASPHALTIC PAVEMENT MILLINGS SHALL NOT BE USED AS A SURFACE COURSE FOR TEMPORARY PEDESTRIAN WALKWAYS.

6. A 60-INCH MINIMUM WIDTH PEDESTRIAN FACILITY SHOULD BE MAINTAINED WHEN POSSIBLE. WHEN A 60-INCH MINIMUM WIDTH CANNOT BE ACHIEVED, A MINIMUM WIDTH OF 48 INCHES SHALL BE PROVIDED WITH PASSING ZONES (60 INCHES BY 60 INCHES) AT LEAST EVERY 200 FEET.

7. TEMPORARY AUDIBLE INFORMATION DEVICES SHOULD BE USED WHERE MIDBLOCK CLOSINGS AND CHANGED CROSSWALK AREAS CAUSE INADEQUATE COMMUNICATION TO BE PROVIDED TO PEDESTRIANS WHO HAVE VISUAL DISABILITIES.

8. CURB PARKING SHALL BE PROHIBITED FOR AT LEAST 50 FEET IN ADVANCE OF THE MIDBLOCK CROSSWALK.

9. PLACEMENT AND REMOVAL OF TEMPORARY CROSSWALK STRIPING SHALL BE INCLUDED IN LUMP SUM TRAFFIC CONTROL.

10. WHEN CURB CUT RAMP IS NOT PRESENT, TEMPORARY OR PERMANENT CURB CUT RAMP WILL BE PROVIDED BY CONTRACTOR.

STANDARD LEGEND

DETECTABLE BARRIER	CURB CUT RAMP WITH DETECTABLE SURFACE WARNING
DETECTABLE EDGING	SIGN
WORK SITE	DIRECTION OF TRAFFIC LANE(S)
STRIPED DRUM	

DEPARTMENT OF TRANSPORTATION
STATE OF GEORGIA

CONSTRUCTION DETAIL
TRAFFIC CONTROL
PEDESTRIAN ACCESSIBILITY
AROUND WORKZONE -
MIDBLOCK CROSSING AND SIDEWALK DETOUR

NO SCALE — SEPTEMBER 2008

REVISED TITLE BLOCK REVISION	DATE	GLO BY
	10-16-08	

T-22

STATE	PROJECT NUMBER	SHEET NO.	TOTAL SHEETS
GA.			

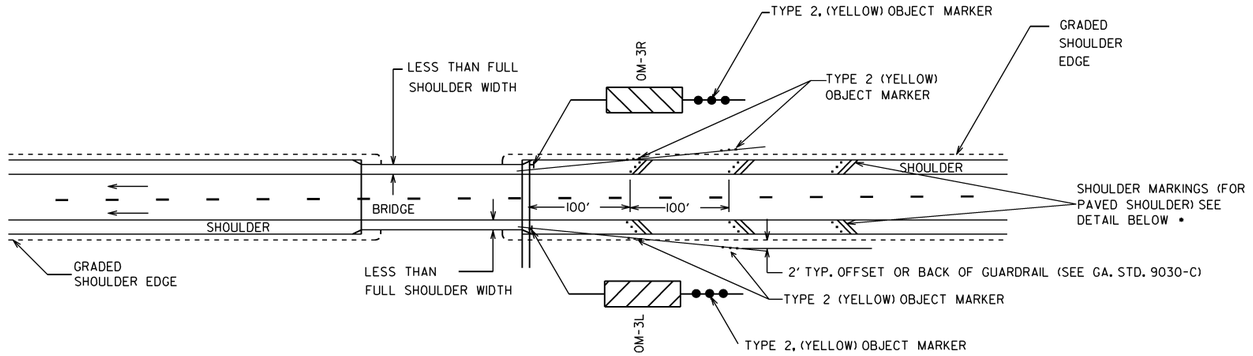

BRIDGE WITH LESS THAN STANDARD WIDTH

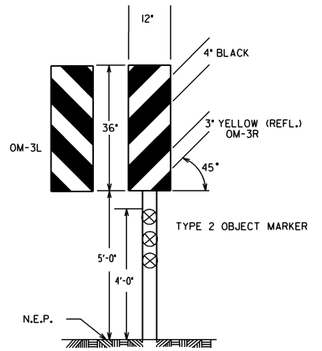

DETAIL - OBJECT MARKER - TYPE 3
(NO SCALE)

SUMMARY OF MATERIALS		
DESCRIPTION	UNIT	QUAN.
OBJECT MARKERS, TYPE IX SIGN MATERIAL 12" x 36" (BLACK ON YELLOW)	SQ. FT.	6.00
GALVANIZED STEEL POSTS, TYPE 2, 11 LIN. FT. EACH	LIN.FT.	22
OBJECT MARKERS, TYPE 2, (YELLOW) (INCL POST)	EACH	4
OBJECT MARKERS, TYPE 2, (YELLOW) (MOUNT ON OBJECT MARKER POSTS)	EACH	2
THERMOPLASTIC SOLID TRAFFIC STRIPE, 18" WHITE	LIN.FT.	VARIES
RAISED PAVEMENT MARKERS, TYPE 3	EACH	VARIES

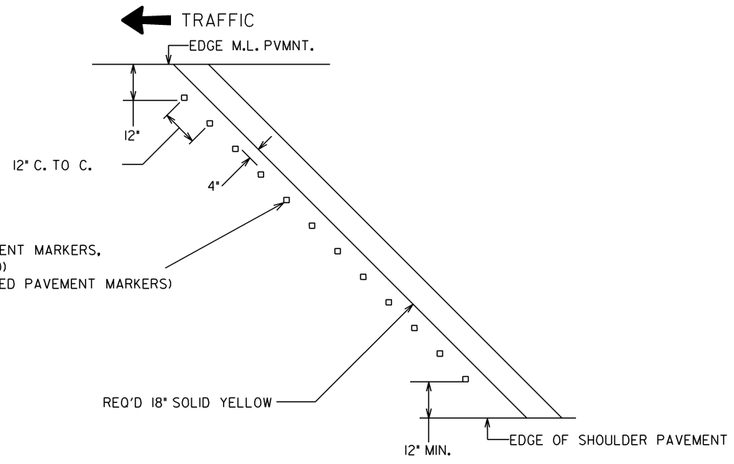

TYPICAL MARKING FOR 10' PAVED INSIDE SHOULDER

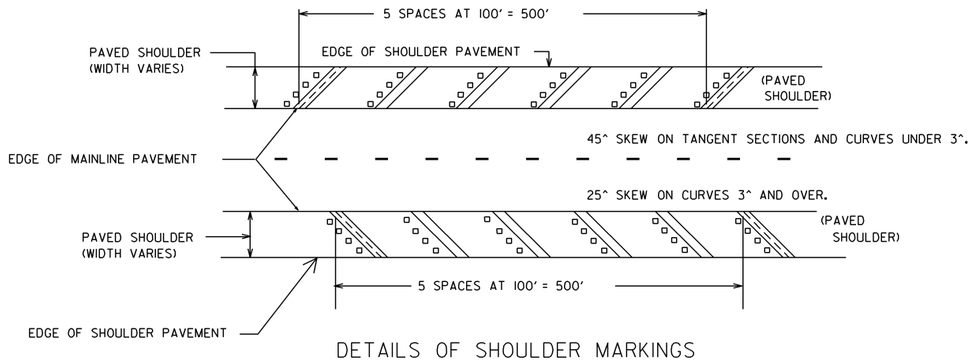

DETAILS OF SHOULDER MARKINGS
(FOR SHOULDER ENCROACHMENTS)

GENERAL NOTES:

1. OBJECT MARKERS SHALL BE PLACED IN A STRAIGHT LINE FLARE WITH THE FIRST UNIT OFFSET AS SHOWN.
2. ALL OBJECT MARKERS SHALL CONFORM TO GEORGIA STANDARD 9030-C AND SECTION 3D OF THE M.U.T.C.D. OBJECT MARKERS SHALL BE PER SECTION 3C OF THE M.U.T.C.D.
3. REFLECTIVE SHEETING FOR OBJECT MARKERS SHALL BE TYPE IX.
4. TREATMENT SHOWN IS MINIMAL. ADDITIONAL DELINEATION MAY BE ADDED AT THE ENGINEER'S DISCRETION.
5. DELINEATION DETAILS APPLY WHERE BRIDGE WIDTH ON DIVIDED HIGHWAYS IS LESS THAN IS REQUIRED BY M.O.G. DIRECTIVE #4265. SHOULDER MARKINGS APPLY TO SAME IF SHOULDERS ARE PAVED.
6. SEE GEORGIA STANDARD 9030-C FOR DELINEATION AT FULL WIDTH BRIDGES.
7. DIAGONAL STRIPES SHALL BE WHITE ON OUTSIDE SHOULDER AND YELLOW ON INSIDE SHOULDER.
8. TYPE 3 RAISED PAVEMENT MARKERS SHALL BE CLEAR/RED ON OUTSIDE SHOULDER AND YELLOW/RED ON INSIDE SHOULDER.
9. CLEAR AND YELLOW FACE OF TYPE 3 RAISED PAVEMENT MARKERS SHALL BE ORIENTED TOWARD APPROACHING TRAFFIC.

LENGTH OF STRIPE		
SHOULDER WIDTH	45° SKEW	25° SKEW
10' PAVED SHOULDER	14.14'	18.11'
8' PAVED SHOULDER	11.31'	14.63'
4' PAVED SHOULDER	5.66'	7.35'

NO. OF RAISED PAVEMENT MARKERS		
SHOULDER WIDTH	45° SKEW	25° SKEW
10' PAVED SHOULDER	12 ea.	15 ea.
8' PAVED SHOULDER	9 ea.	11 ea.
4' PAVED SHOULDER	4 ea.	4 ea.

DATE	REVISIONS
9-7-06	REVISED TITLE BLOCK AND
	REV. TYP. MARKING DETAIL

GEORGIA DEPARTMENT OF TRANSPORTATION
OFFICE OF TRAFFIC SAFETY & DESIGN

T-22A

DETAILS FOR
BRIDGE DELINEATION
ON DIVIDED HIGHWAYS

NO SCALE JANUARY 2000

BRIDGE DELINEATION DETAILS

STATE	PROJECT NUMBER	SHEET NO.	TOTAL SHEETS
GA.			

TYPE 1 - NORMAL BRIDGE

BRIDGES THAT ARE 4 FEET OR MORE WIDER THAN THE APPROACH PAVEMENT, EACH SIDE

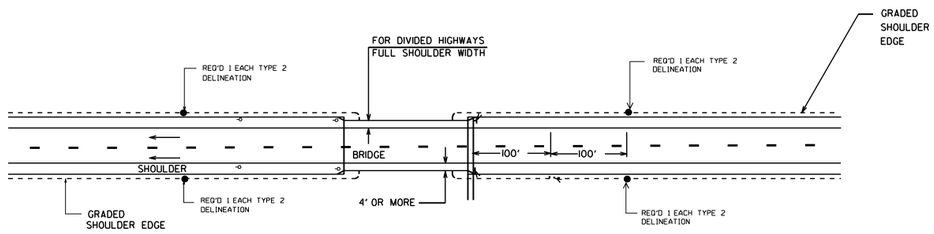

TWO WAY OPERATION SHOWN

SUMMARY OF MATERIALS		
DESCRIPTION	UNIT	QUAN.
TWO WAY OPERATION		
DELINEATORS, TYPE 2, WHITE	EACH	12
ONE WAY OPERATION		
DELINEATORS, TYPE 1, WHITE	EACH	3
DELINEATORS, TYPE 1, YELLOW	EACH	3

GENERAL NOTES

1. PLACE DELINEATORS IN A STRAIGHT LINE FLARE WITH THE FIRST ONE OFFSET AS SHOWN.
2. THE INSIDE EDGE OF THE DELINEATOR NEAREST THE BRIDGE SHALL BE IN LINE WITH THE INNER EDGE OF RAIL OR ABUTMENT OR FACE OF BRIDGE CURB (IF PRESENT).
3. ALL DELINEATORS SHALL CONFORM TO GEORGIA STANDARD 9030-C AND SECT 3-D OF THE M.U.T.C.D.
4. TREATMENT SHOWN IS MINIMAL. ADDITIONAL DELINEATION MAY BE ADDED AT THE ENGINEER'S DESCRETION.

TYPE 2 - INTERMEDIATE BRIDGE

2 OR MORE LANE OPERATION - WIDTH GREATER THAN ROADWAY WIDTH, BUT LESS THAN 4' IN EXCESS OF APPROACH PAVEMENT WIDTH, EACH SIDE

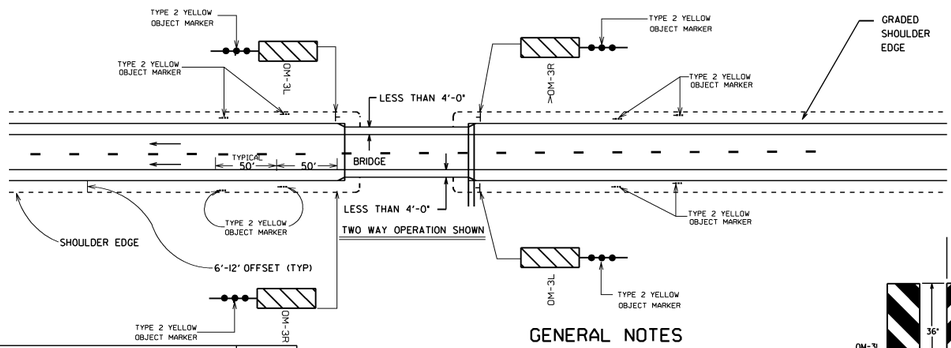

SUMMARY OF MATERIALS			
DESCRIPTION	UNIT	QUAN.	QUAN. TWO WAY
OBJECT MARKERS, TYPE IX SIGN MATERIAL 12" x 36" (BLACK ON YELLOW)	SQ FT	2:6.00	4:12.00
GALVANIZED STEEL POSTS, TYPE 1 12 LIN FT EACH (2#)	LIN FT	2:24	4:48
OBJECT MARKER, TYPE 2 YELLOW (MOUNT ON OBJECT MARKER POSTS)	EACH	4	8
SOLID TRAFFIC STRIPE, 4" WHITE (EDGELINE)	LIN FT	1100	2200
SOLID TRAFFIC STRIPE, 4" YELLOW (EDGELINE)	LIN FT	1100	

GENERAL NOTES

1. ON BRIDGES WITH ONE WAY OPERATION, BRIDGE APPROACH DELINEATION (INCL. SIGNS AND MARKINGS) SHALL BE INSTALLED ON THE APPROACH END ONLY.
2. THE INSIDE EDGE OF THE OBJECT MARKER NEAREST THE BRIDGE SHALL BE IN LINE WITH THE INNER EDGE OF THE ABUTMENT OR RAIL, OR FACE OF BRIDGE CURB IF PRESENT.
3. OBJECT MARKERS SHALL BE PLACED IN A STRAIGHT LINE FLARE WITH THE FIRST UNIT OFFSET AS SHOWN.
4. ALL OBJECT MARKERS SHALL CONFORM TO GEORGIA STANDARD 9030-C AND SECT 3-D.02 OF THE M.U.T.C.D. OBJECT MARKERS SHALL BE PER SECT. 3-6 OF THE M.U.T.C.D.
5. REFLECTIVE SHEETING FOR OBJECT MARKERS SHALL BE TYPE IX, LEVEL A.
6. TREATMENT SHOWN IS MINIMAL ADDITIONAL DELINEATION MAY BE ADDED AT THE ENGINEER DISCRETION. N.E.P.

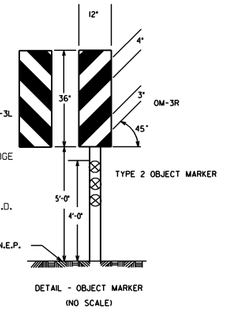

DETAIL - OBJECT MARKER
(NO SCALE)

TYPE 3 - NARROW BRIDGE

(A.) 2 LANE OPERATION - BETWEEN 18' AND 24' WIDE (B.) 3 OR MORE LANE OPERATION EQUAL TO OR LESS THAN APPROACH PAVEMENT WIDTH

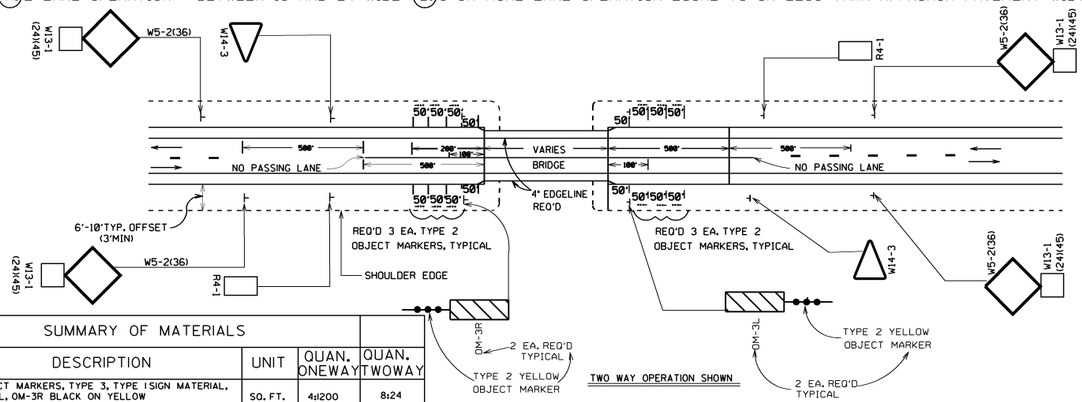

SUMMARY OF MATERIALS			
DESCRIPTION	UNIT	QUAN. ONEWAY	QUAN. TWOWAY
OBJECT MARKERS, TYPE 3, TYPE I SIGN MATERIAL, OM-3L, OM-3R BLACK ON YELLOW	SQ. FT.	4:1200	8:24
GALVANIZED STEEL POSTS, TYPE 1, 12 LIN FT EACH FOR OBJECT MARKERS	LIN.FT.	4:48	8:96
OBJECT MARKER, TYPE 2, (YELLOW)	EACH	8	16
W5-2(36)SIGNS, TYPE III SIGN MATL.	SQ. FT.	2:18:00	4:36
W13-1(24)(45), SIGNS, TYPE III SIGN MATL - MOUNT W/W5-2	SQ. FT.	2:18:00	4:36
GALV. STEEL POSTS, TYPE 1, PB, (4#) 16 LIN FT EA FOR W5-2	LIN.FT.	2:64	4:128
R4-1(24) SIGNS, TYPE I SIGN MATL	SQ. FT.		2:10:00
GALV. STEEL POSTS, TYPE III (2#) 13 LIN FT EA FOR R4-1	LIN.FT.		2:26
W14-3(48)SIGNS, TYPE III SIGN MATL.	SQ. FT.		2:11
GALV. STEEL POSTS, TYPE 2 (3#) 12 LIN FT EA FOR W14-3	LIN.FT.		2:24
RAISED PAVEMENT MARKERS TYPE I FOR CENTERLINES SPACING 40'-0"	EACH	CLEAR 18	YELLOW 36
4" SOLID TRAF. STRIPE FOR EDGELINES	LIN.FT.	100 WHITE 100 YELLOW	YELLOW 2:200
4" SOLID YELLOW - PASSING LINES	LIN.FT.		1400
4" SKIP WHITE - CENTERLINE (ONEWAY)	GR LIN.FT.	700	

GENERAL NOTES

1. ON BRIDGES WITH ONE WAY OPERATION, BRIDGE APPROACH SIGNS AND MARKINGS SHALL BE INSTALLED ON THE APPROACH END OF THE BRIDGE ONLY. SIGNS AND MARKINGS FOR NO PASSING ZONES ARE NOT REQUIRED. LEFT EDGE LINES AND RAISED PAVEMENT MARKERS SHALL BE YELLOW. RIGHT EDGE LINES AND PAVEMENT MARKERS SHALL BE WHITE. LANE LINE SHALL BE SKIP WHITE.
2. PAVEMENT MARKERS FOR THE CENTERLINE/LANELINE SHALL BE RAISED IN APPLICABLE AREA IN ACCODANCE WITH DEPARTMENT POLICY.
3. THE INSIDE EDGE OF THE OBJECT MARKER NEAREST THE BRIDGE SHALL BE IN LINE WITH THE INNER EDGE OF THE ABUTEMENT OR RAIL, OR FACE OF BRIDGE CURB IF PRESENT.
4. PLACE OBJECT MARKER AND DELINEATORS IN A STRAIGHT LINE FLARE WITH THE FIRST ONE OFFSET AS SHOWN.
5. ALL REFLECTIVE SHEETING SHALL BE TYPE IX.
6. ALL OBJECT MARKERS SHALL CONFORM TO GA STD. 9030-C AND SECT 111 OF THE M.U.T.C.D.. ALL OBJECT MARKERS SHALL CONFORM TO SECT. III-C OF THE M.U.T.C.D.
7. TREATMENT SHOWN IS MINIMAL. ADDITIONAL TREATMENT MAY BE ADDED AT THE ENGINEER DISCRETION.

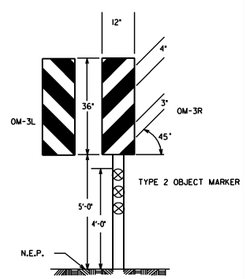

DETAIL - OBJECT MARKER
(NO SCALE)

TYPE 4 - ONE LANE BRIDGE

(A.) BRIDGES LESS THAN 18' IN WIDTH. (B.) 18' WIDE WITH POOR APPROACH ALIGNMENT OR SUBSTANTIAL TRUCK VOLUME.

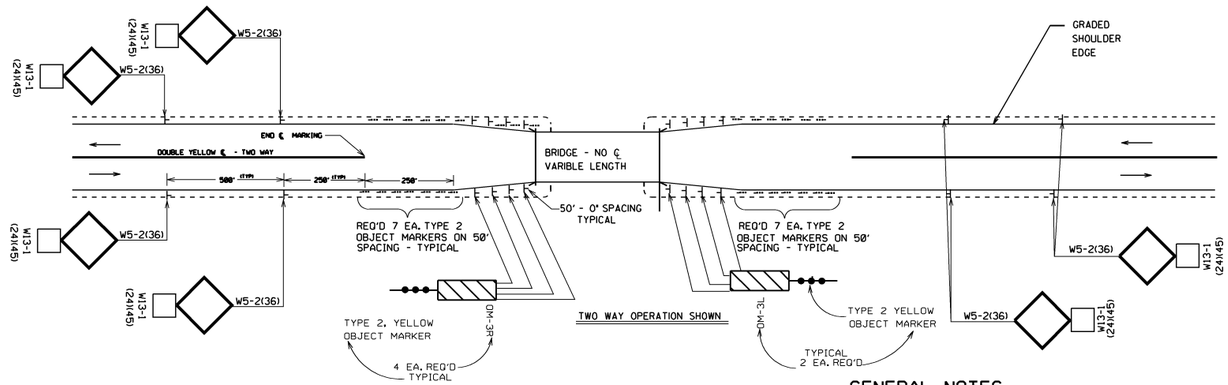

SUMMARY OF MATERIALS		
DESCRIPTION	UNIT	QUAN.
OBJECT MARKERS, TYPE 3, TYPE IX SIGN MATL 8 EACH OM-3R, OM-3L	SQ FT	16:48.00
GALV. STEEL POSTS, TYPE 1, 12' (2#) FOR OBJECT MARKERS	LIN FT	16:192
OBJECT MARKER, TYPE 2, YELLOW MOUNTED ON OBJECT MARKERS POST	EACH	16
OBJECT MARKER, TYPE 2 YELLOW INCL. POSTS	EACH	28
W5-3(36) SIGNS, TYPE IX SIGN MATL.	SQ FT	8:72.00
W13-1(24)(35) SIGNS, TYPE IX SIGN MATL. MOUNTED WITH W5-3	SQ FT	4:16.00
W13-1(24)(45) SIGNS, TYPE IX SIGN MATL. MOUNTED WITH W5-3	SQ FT	4:16.00
GALV. STEEL POSTS, TYPE 1, (PB-4#) 16' L FOR W5-3 SIGNS	LIN FT	8:256
SOLID TRAFFIC STRIPE-8" WHITE FOR EDGELINE	LIN FT	2200
SOLID TRAFFIC STRIPE-4" YELLOW FOR APPROACH CENTERLINE (1000 MIN EA END)	LIN FT	4000
RAISED/RECESSED MARKERS, TYPE 1 YELLOW FOR CENTERLINE - 40'-0" SPACING	EACH	100

GENERAL NOTES

1. OBJECT MARKER NEAREST THE BRIDGE SHALL BE IN LINE WITH THE INNER EDGE OF THE ABUTEMENT OR RAIL, OR THE FACE OF BRIDGE CURB IF PRESENT. OBJECT MARKERS AND DELINEATORS SHALL FOLLOW THE TAPER OF THE ROADWAY TO FULL WIDTH OF ROADWYA THEN PARALLEL FOR DISTANCE SHOWN.
2. PAVEMENT MARKERS USED ON NO PASSING LANES APPROACHING THE BRIDGE SHALL BE ON 40'-0" SPACING AND SHALL BE RAISED WHERE APPLICABLE.
3. 4 IN SOLID YELLOW NO PASSING LINES SHALL BE INSTALLED FOR AT LEAST 1000' IN ADVANCE OF THE BRIDGE.
4. REFLECTIVE SHEETING TYPE IX, LEVEL A SHALL BE USED FOR ALL SIGNS AND OBJECT MARKERS.
5. ALL DELINEATIORS SHALL CONFORM TO GA. STD. 9030-C AND SECT. 3D.02 OF THE M.U.T.C.D. OBJECT MARKERS SHALL CONFORM TO SECT. 3C.01 OF THE M.U.T.C.D.
6. DELINEATION SHOWN IS MINIMAL. ADDITIONAL DELINEATION MAY BE ADDED AT THE ENGINEERS DISCRETION.
7. IN THE EVENT THE ROADWAY IS A ONE WAY OPERATION, CONTACT THE DISTRICT TRAFFIC AND SAFETY ENGINEER FOR DELINEATION DETAILS.

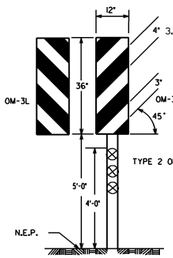

DETAIL - OBJECT MARKER
(NO SCALE)

DATE	REVISIONS
9-7-06	ADDED TITLE BLOCK AND
	REV. REFLECTIVE SHEET.

GEORGIA DEPARTMENT OF TRANSPORTATION
OFFICE OF TRAFFIC SAFETY & DESIGN

DETAILS FOR BRIDGE DELINEATION ON DIVIDED HIGHWAYS TWO WAY OPERATION — T-22B

NO SCALE — REV 5/23/05

GDOT Georgia Department of Transportation | P. I. No.

REQUIRED SIGNS



R3-7BP
24''x 12''



R10-6
24''x 36''

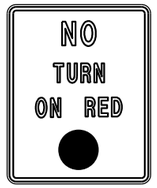

R10-11
24''x 30''

GREEN-COLORED PAVEMENT

BIKE SYMBOL (WHITE)

NOTES:
1. BICYCLE BOXES MUST COMPLY WITH ALL MUTCD SECTION 9E.12 STANDARDS.

2. GREEN-COLORED PAVEMENT MUST COMPLY WITH ALL MUTCD SECTION 3H.06 STANDARDS.

3. PREFERRED LOCATION FOR FAR-SIDE R10-11 SIGN IS ON SIGNAL MAST ARM OR SPAN WIRE DIRECTLY TO THE RIGHT OF RIGHTMOST SIGNAL HEAD.

DEPARTMENT OF TRANSPORTATION
STATE OF GEORGIA

CONSTRUCTION DETAIL

SIGNALIZED INTERSECTION WITH BIKE BOXES

BICYCLE BOXES ON 2-LANE ROAD WITHOUT INTERSECTION EXTENSION MARKINGS

DATE | REVISION | BY

JULY 2024
NOT TO SCALE

NUMBER
T-26A

GDOT Georgia Department of Transportation | P. I. No.

REQUIRED SIGNS



R3-7BP
24''x 12''



R10-6
24''x 36''

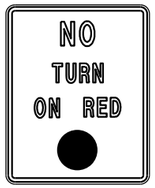

R10-11
24''x 30''

GREEN-COLORED PAVEMENT

BIKE SYMBOL (WHITE)

NOTES:
1. BICYCLE BOXES MUST COMPLY WITH ALL MUTCD SECTION 9E.12 STANDARDS.

2. GREEN-COLORED PAVEMENT MUST COMPLY WITH ALL MUTCD SECTION 3H.06 STANDARDS.

3. PREFERRED LOCATION FOR FAR-SIDE R10-11 SIGN IS ON SIGNAL MAST ARM OR SPAN WIRE DIRECTLY TO THE RIGHT OF RIGHTMOST SIGNAL HEAD.

DEPARTMENT OF TRANSPORTATION
STATE OF GEORGIA

CONSTRUCTION DETAIL

SIGNALIZED INTERSECTION WITH BIKE BOXES

BICYCLE BOXES ON 2-LANE ROAD

DATE | REVISION | BY

JULY 2024
NOT TO SCALE

NUMBER T-26B

GDOT Georgia Department of Transportation | P. I. No.

REQUIRED SIGNS



R3-7BP
24''x 12''



R10-6
24''x 36''

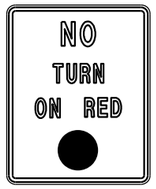

R10-11
24''x 30''



R4-4
36''x 30''

GREEN-COLORED PAVEMENT

BIKE SYMBOL (WHITE)

NOTES:

1. BICYCLE BOXES MUST COMPLY WITH ALL MUTCD SECTION 9E.12 STANDARDS.

2. GREEN-COLORED PAVEMENT MUST COMPLY WITH ALL MUTCD SECTION 3H.06 STANDARDS.

3. PREFERRED LOCATION FOR FAR-SIDE R10-11 SIGN IS ON SIGNAL MAST ARM OR SPAN WIRE DIRECTLY TO THE RIGHT OF RIGHTMOST SIGNAL HEAD.

DEPARTMENT OF TRANSPORTATION
STATE OF GEORGIA

CONSTRUCTION DETAIL

SIGNALIZED INTERSECTION WITH BIKE BOXES

BICYCLE BOXES ON 2-LANE ROAD WITH RIGHT-TURN ONLY LANE

DATE | REVISION | BY

JULY 2024
NOT TO SCALE

NUMBER
T-26C

GDOT Georgia Department of Transportation | P.I. No.

REQUIRED SIGN

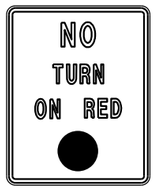

R10-11
24''x 30''

OPTIONAL SIGNS



D11-20a
12''x 18''



D11-20
12''x 18''

TWO-STAGE TURN BOX DETAIL

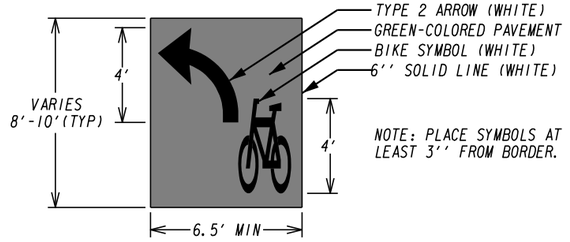

NOTE: PLACE SYMBOLS AT LEAST 3'' FROM BORDER.

GREEN-COLORED PAVEMENT

BIKE SYMBOL (WHITE)

NOTES:

1. TWO-STAGE TURN BOXES MUST COMPLY WITH ALL MUTCD SECTION 9E.11 STANDARDS.

2. GREEN-COLORED PAVEMENT MUST COMPLY WITH ALL MUTCD SECTION 3H.06 STANDARDS.

3. PREFERRED LOCATION FOR FAR-SIDE R10-11 SIGN IS ON SIGNAL MAST ARM OR SPAN WIRE DIRECTLY TO THE RIGHT OF RIGHTMOST SIGNAL HEAD.

DEPARTMENT OF TRANSPORTATION
STATE OF GEORGIA

CONSTRUCTION DETAIL

SIGNALIZED INTERSECTION
WITH BIKE BOXES

TWO-STAGE TURN BOXES ON 2-LANE ROAD

DATE | REVISION | BY

JULY 2024
NOT TO SCALE

NUMBER
T-26D

GDOT Georgia Department of Transportation | P.I. No.

REQUIRED SIGNS

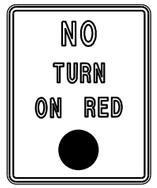

R10-11
24''x 30''

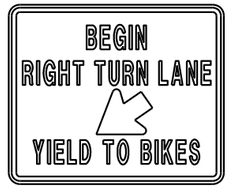

R4-4
36''x 30''

OPTIONAL SIGNS



D11-20a
12''x 18''



D11-20
12''x 18''

TWO-STAGE TURN BOX DETAIL

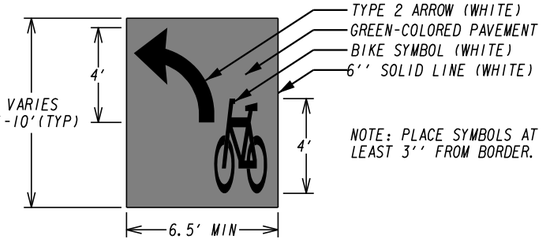

NOTE: PLACE SYMBOLS AT LEAST 3'' FROM BORDER.

GREEN-COLORED PAVEMENT

BIKE SYMBOL (WHITE)

NOTES:

1. TWO-STAGE TURN BOXES MUST COMPLY WITH ALL MUTCD SECTION 9E.11 STANDARDS.

2. GREEN-COLORED PAVEMENT MUST COMPLY WITH ALL MUTCD SECTION 3H.06 STANDARDS.

3. PREFERRED LOCATION FOR FAR-SIDE R10-11 SIGN IS ON SIGNAL MAST ARM OR SPAN WIRE DIRECTLY TO THE RIGHT OF RIGHTMOST SIGNAL HEAD.

DEPARTMENT OF TRANSPORTATION
STATE OF GEORGIA

CONSTRUCTION DETAIL

SIGNALIZED INTERSECTION WITH BIKE BOXES

TWO-STAGE TURN BOXES ON 2-LANE ROAD WITH RIGHT-TURN ONLY LANE

DATE | REVISION | BY

JULY 2024

NOT TO SCALE

NUMBER T-26E

GDOT Georgia Department of Transportation | P.I. No.

REQUIRED SIGN

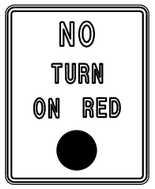

R10-11
24''x 30''

OPTIONAL SIGNS



D11-20a
12''x 18''



D11-20
12''x 18''

TWO-STAGE TURN BOX DETAIL

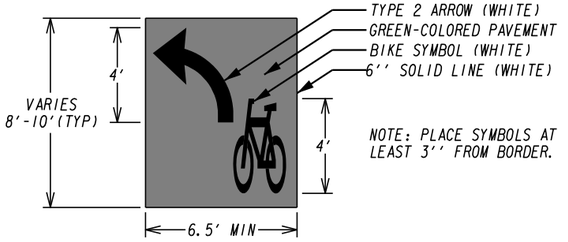

NOTE: PLACE SYMBOLS AT LEAST 3'' FROM BORDER.

GREEN-COLORED PAVEMENT

BIKE SYMBOL (WHITE)

NOTES:

1. TWO-STAGE TURN BOXES MUST COMPLY WITH ALL MUTCD SECTION 9E.11 STANDARDS.

2. GREEN-COLORED PAVEMENT MUST COMPLY WITH ALL MUTCD SECTION 3H.06 STANDARDS.

3. PREFERRED LOCATION FOR FAR-SIDE R10-11 SIGN IS ON SIGNAL MAST ARM OR SPAN WIRE DIRECTLY TO THE RIGHT OF RIGHTMOST SIGNAL HEAD.

DEPARTMENT OF TRANSPORTATION
STATE OF GEORGIA

CONSTRUCTION DETAIL

SIGNALIZED INTERSECTION WITH BIKE BOXES

TWO-STAGE TURN BOXES ON 4-LANE ROAD

DATE | REVISION | BY

JULY 2024
NOT TO SCALE

NUMBER T-26F

GDOT Georgia Department of Transportation | P.I. No.

REQUIRED SIGNS

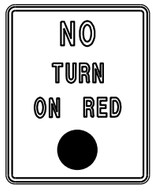

R10-11
24''x 30''

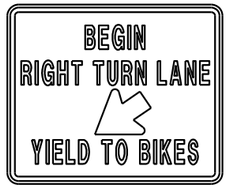

R4-4
36''x 30''

OPTIONAL SIGNS



D11-20a
12''x 18''



D11-20
12''x 18''

TWO-STAGE TURN BOX DETAIL

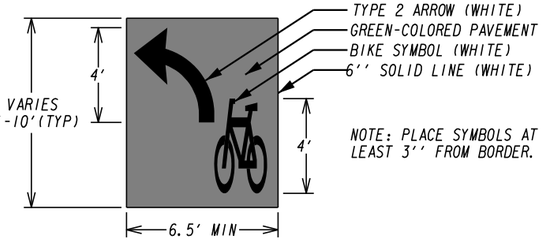

NOTE: PLACE SYMBOLS AT LEAST 3'' FROM BORDER.

GREEN-COLORED PAVEMENT

BIKE SYMBOL (WHITE)

NOTES:

1. TWO-STAGE TURN BOXES MUST COMPLY WITH ALL MUTCD SECTION 9E.11 STANDARDS.

2. GREEN-COLORED PAVEMENT MUST COMPLY WITH ALL MUTCD SECTION 3H.06 STANDARDS.

3. PREFERRED LOCATION FOR FAR-SIDE R10-11 SIGN IS ON SIGNAL MAST ARM OR SPAN WIRE DIRECTLY TO THE RIGHT OF RIGHTMOST SIGNAL HEAD.

DEPARTMENT OF TRANSPORTATION
STATE OF GEORGIA

CONSTRUCTION DETAIL

SIGNALIZED INTERSECTION WITH BIKE BOXES

TWO-STAGE TURN BOXES ON 4-LANE ROAD WITH RIGHT-TURN ONLY LANE

DATE | REVISION | BY

JULY 2024
NOT TO SCALE

NUMBER T-26G

GDOT Georgia Department of Transportation | P. I. No.

REQUIRED SIGNS



W16-7P(R) 21''× 15''
W16-7P(L) 21''× 15''
W11-2 36'' X 36''
R10-25 9'' X 12''
W16-9P 24'' X 12''

RECTANGULAR RAPID FLASHING BEACON

NOT TO SCALE

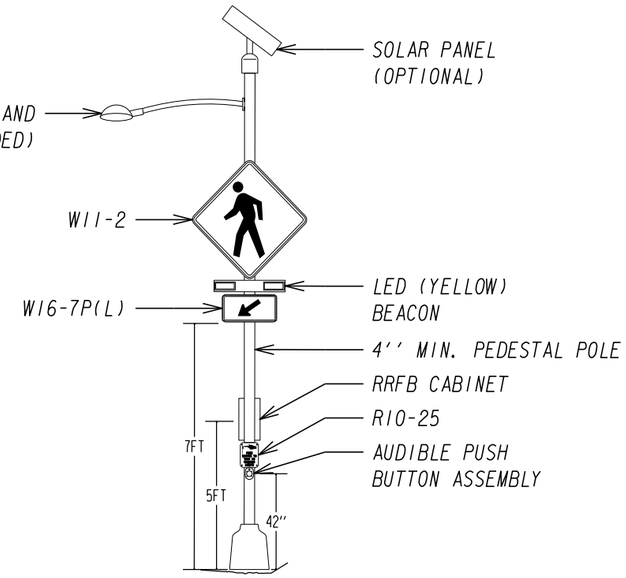

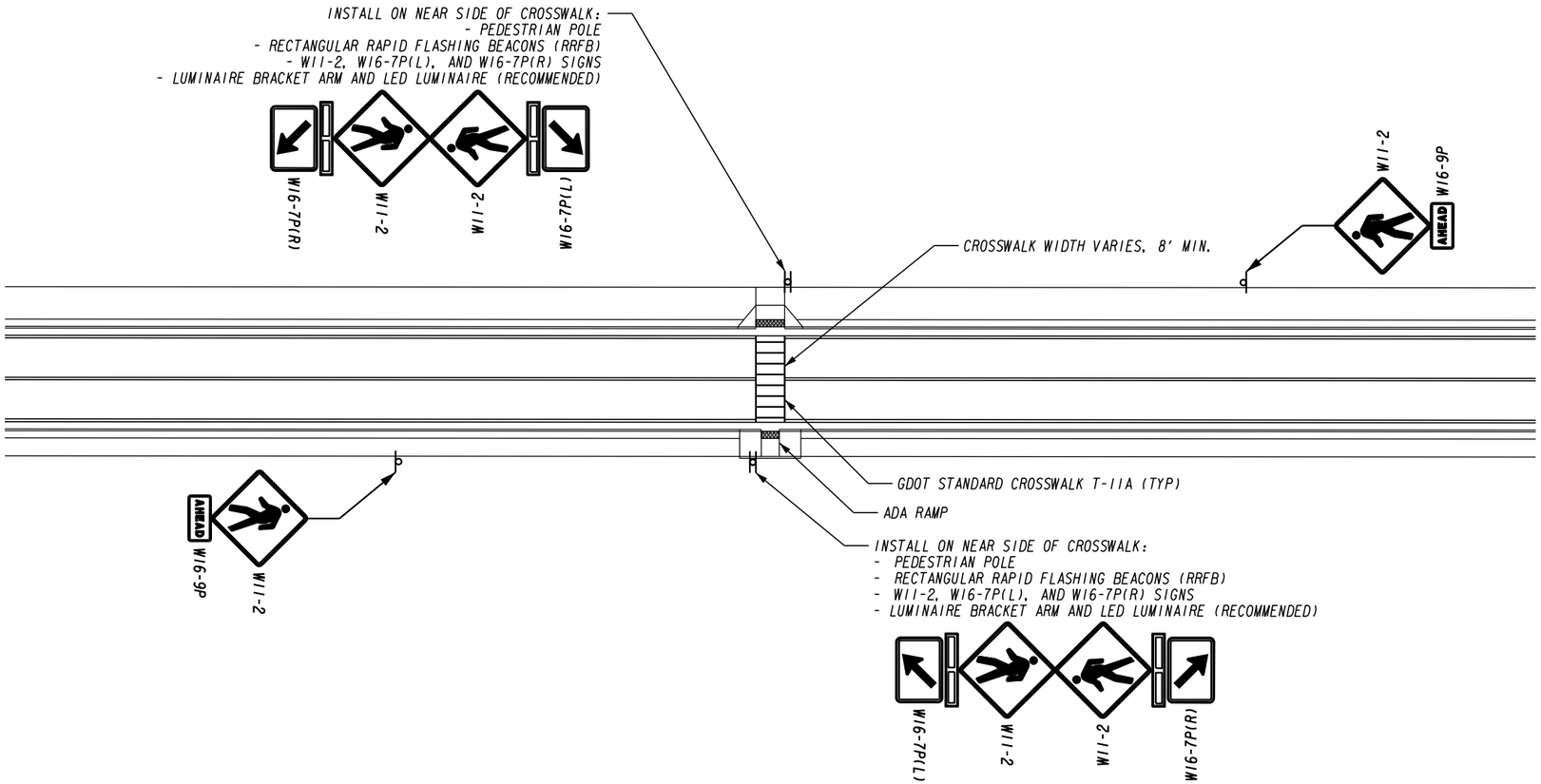

NOTES:

1. RECTANGULAR RAPID-FLASHING BEACON MUST COMPLY WITH ALL MUTCD 11TH EDITION CHAPTER 4L STANDARDS.
2. PUSH BUTTON ASSEMBLY MUST COMPLY WITH ALL PROWAG GUIDELINES.
3. PLACEMENT OF THE W11-2 SIGN AND W16-9P PLAQUE ASSEMBLY SHOULD BE DETERMINED IN ACCORDANCE WITH MUTCD SECTION 2C.04.
4. W11-15 OR S1-1 SIGNS CAN BE USED IN PLACE OF W11-2 SIGNS AS APPROPRIATE PER THE MUTCD.
5. RRFB CABINET SHOULD BE POSITIONED SUCH THAT IT DOES NOT PROTRUDE INTO THE PEDESTRIAN CIRCULATION PATH. SEE PROWAG GUIDELINES FOR FURTHER INFORMATION.
6. LED LUMINAIRE SHOULD BE INSTALLED AT MOST 20-FT ABOVE ROADWAY, AIMED IN ADVANCE OF THE CROSSWALK, AND PROVIDE 20 VERTICAL LUX AT THE CROSSWALK.

BY	REVISION	DATE
XJH	W16-7P SIZE; R10-25 DESIGN	07/01/26

DEPARTMENT OF TRANSPORTATION
STATE OF GEORGIA

CONSTRUCTION DETAIL

RECTANGULAR RAPID FLASHING BEACON (RRFB) PLAN

2 LANES
(WITHOUT PEDESTRIAN REFUGE ISLAND)

JULY 2024
NOT TO SCALE

NUMBER T-27A

GDOT Georgia Department of Transportation | P. I. No.

REQUIRED SIGNS



R1-6A 12''x 36''

W16-7P(R) 21''x 15''

W16-7P(L) 21''x 15''

W11-2 36'' X 36''

R10-25 9'' X 12''

W16-9P 24'' X 12''

RECTANGULAR RAPID FLASHING BEACON

NOT TO SCALE

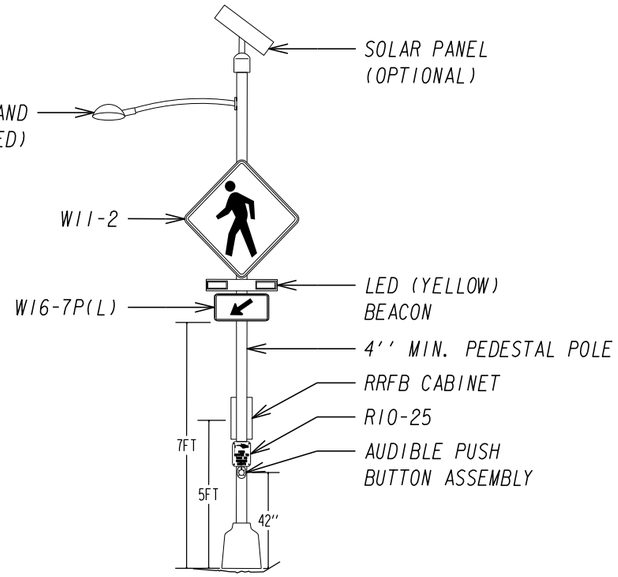

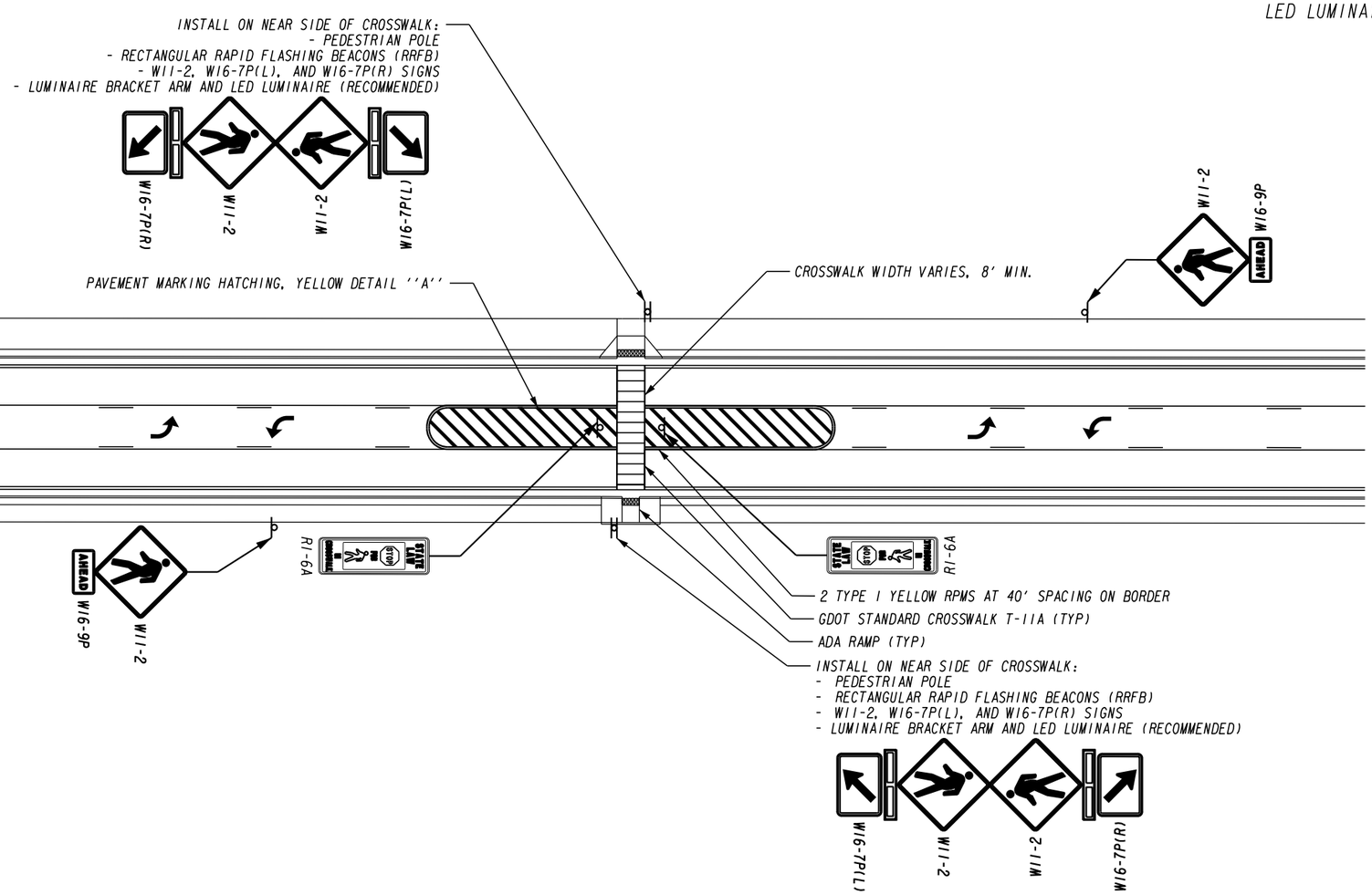

NOTES:

1. RECTANGULAR RAPID-FLASHING BEACON MUST COMPLY WITH ALL MUTCD 11TH EDITION CHAPTER 4L STANDARDS.
2. PUSH BUTTON ASSEMBLY MUST COMPLY WITH ALL PROWAG GUIDELINES.
3. PLACEMENT OF THE W11-2 SIGN AND W16-9P PLAQUE ASSEMBLY SHOULD BE DETERMINED IN ACCORDANCE WITH MUTCD SECTION 2C.04.
4. W11-15 OR S1-1 SIGNS CAN BE USED IN PLACE OF W11-2 SIGNS AS APPROPRIATE PER THE MUTCD.
5. RRFB CABINET SHOULD BE POSITIONED SUCH THAT IT DOES NOT PROTRUDE INTO THE PEDESTRIAN CIRCULATION PATH. SEE PROWAG GUIDELINES FOR FURTHER INFORMATION.
6. LED LUMINAIRE SHOULD BE INSTALLED AT MOST 20-FT ABOVE ROADWAY, AIMED IN ADVANCE OF THE CROSSWALK, AND PROVIDE 20 VERTICAL LUX AT THE CROSSWALK.
7. LENGTH OF PAVEMENT MARKING HATCHING TO BE DETERMINED USING ENGINEERING JUDGEMENT WITH CONSIDERATION TO SPEED LIMIT, DESIRED LEVEL OF ACCESS, AND OTHER RELEVANT FACTORS.

BY	REVISION	DATE
XJH	W16-7P SIZE; R10-25 DESIGN	07/01/26

DEPARTMENT OF TRANSPORTATION
STATE OF GEORGIA

CONSTRUCTION DETAIL

RECTANGULAR RAPID FLASHING BEACON (RRFB) PLAN

3 LANES
(WITHOUT PEDESTRIAN REFUGE ISLAND)

JULY 2024
NOT TO SCALE

NUMBER
T-27B

GDOT Georgia Department of Transportation | P. I. No.

REQUIRED SIGNS



W16-7P(R) 21''× 15''
W16-7P(L) 21''× 15''
W11-2 36'' X 36''
R10-25 9'' X 12''
W16-9P 24'' X 12''

RECTANGULAR RAPID FLASHING BEACON

NOT TO SCALE

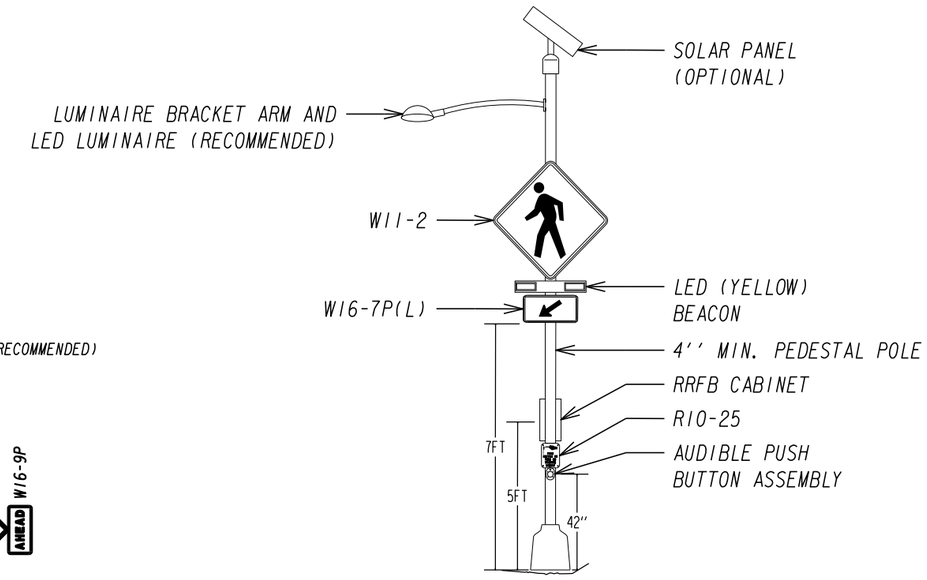

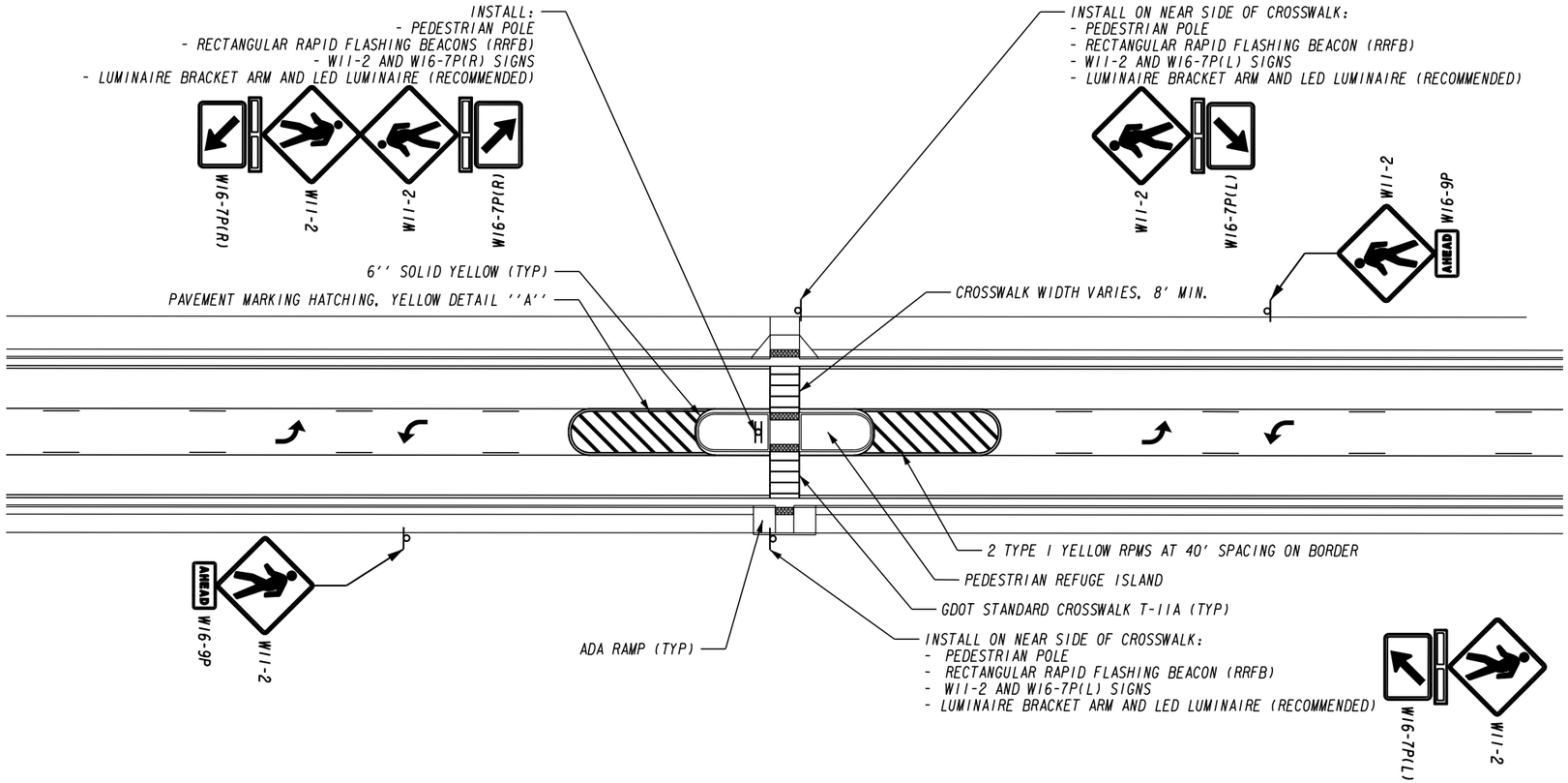

PEDESTRIAN REFUGE ISLAND DIMENSIONING

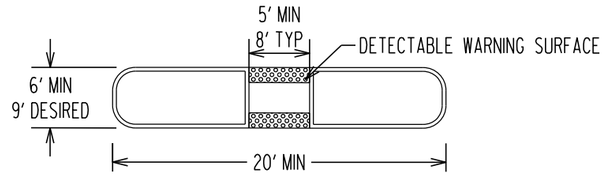

NOTE:
DIMENSIONING SHOWN IS TYPICAL FOR ALL ISLANDS WITH FLUSH OR SEMI-DEPRESSED CUT THROUGHS. ALL RAISED ISLANDS WITH WHEELCHAIR RAMPS SHALL PROVIDE A TURNING SPACE IN COMPLIANCE WITH GDOT DETAILS A-3 AND A-4.

NOTES:

1. RECTANGULAR RAPID-FLASHING BEACON MUST COMPLY WITH ALL MUTCD 11TH EDITION CHAPTER 4L STANDARDS.
2. PUSH BUTTON ASSEMBLY MUST COMPLY WITH ALL PROWAG GUIDELINES.
3. PLACEMENT OF THE W11-2 SIGN AND W16-9P PLAQUE ASSEMBLY SHOULD BE DETERMINED IN ACCORDANCE WITH MUTCD SECTION 2C.04.
4. W11-15 OR S1-1 SIGNS CAN BE USED IN PLACE OF W11-2 SIGNS AS APPROPRIATE PER THE MUTCD.
5. RRFB CABINET SHOULD BE POSITIONED SUCH THAT IT DOES NOT PROTRUDE INTO THE PEDESTRIAN CIRCULATION PATH. SEE PROWAG GUIDELINES FOR FURTHER INFORMATION.
6. LED LUMINAIRE SHOULD BE INSTALLED AT MOST 20-FT ABOVE ROADWAY, AIMED IN ADVANCE OF THE CROSSWALK, AND PROVIDE 20 VERTICAL LUX AT THE CROSSWALK.
7. LENGTH OF PEDESTRIAN REFUGE ISLAND AND PAVEMENT MARKING HATCHING TO BE DETERMINED USING ENGINEERING JUDGEMENT WITH CONSIDERATION TO SPEED LIMIT, DESIRED LEVEL OF ACCESS, AND OTHER RELEVANT SITE SPECIFIC FACTORS.

BY	REVISION	DESIGN	DATE
XJH	W16-7P SIZE; R10-25		07/01/26

DEPARTMENT OF TRANSPORTATION
STATE OF GEORGIA

CONSTRUCTION DETAIL

RECTANGULAR RAPID FLASHING BEACON (RRFB) PLAN

3 LANES
(WITH PEDESTRIAN REFUGE ISLAND)

JULY 2024
NOT TO SCALE

NUMBER
T-27C

GDOT Georgia Department of Transportation | P. I. No.

REQUIRED SIGNS



W16-7P(R) 21''× 15''
W16-7P(L) 21''× 15''
W11-2 36'' X 36''
R10-25 9'' X 12''
W16-9P 24'' X 12''

RECTANGULAR RAPID FLASHING BEACON

NOT TO SCALE

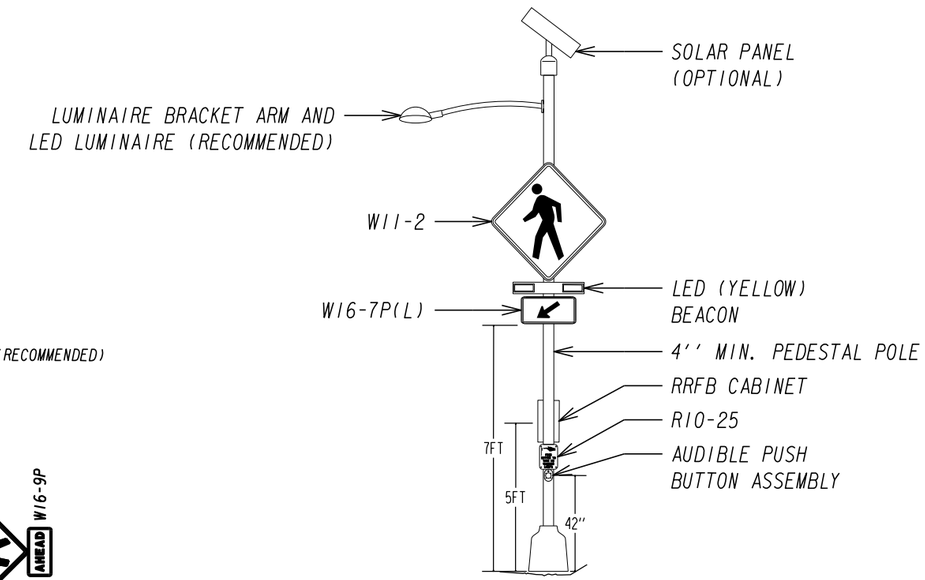

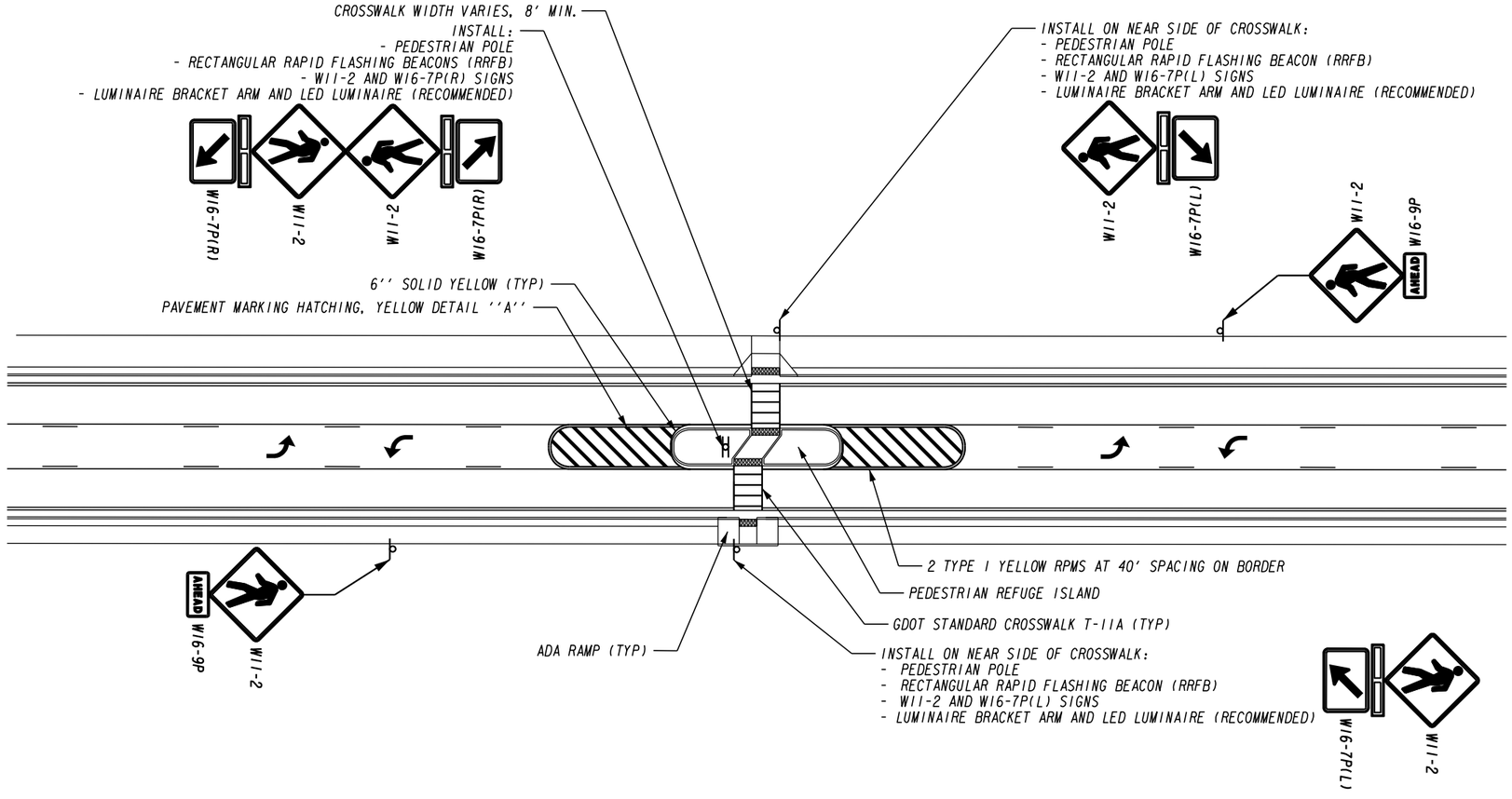

PEDESTRIAN REFUGE ISLAND DIMENSIONING

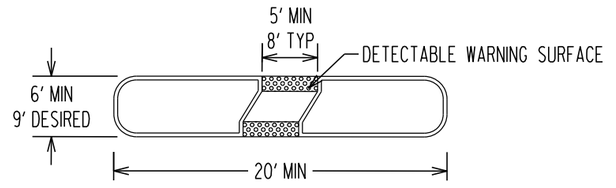

NOTE:
DIMENSIONING SHOWN IS TYPICAL FOR ALL ISLANDS WITH FLUSH OR SEMI-DEPRESSED CUT THROUGHS. ALL RAISED ISLANDS WITH WHEELCHAIR RAMPS SHALL PROVIDE A TURNING SPACE IN COMPLIANCE WITH GDOT DETAILS A-3 AND A-4.

NOTES:

1. RECTANGULAR RAPID-FLASHING BEACON MUST COMPLY WITH ALL MUTCD 11TH EDITION CHAPTER 4L STANDARDS.
2. PUSH BUTTON ASSEMBLY MUST COMPLY WITH ALL PROWAG GUIDELINES.
3. PLACEMENT OF THE W11-2 SIGN AND W16-9P PLAQUE ASSEMBLY SHOULD BE DETERMINED IN ACCORDANCE WITH MUTCD SECTION 2C.04.
4. W11-15 OR S1-1 SIGNS CAN BE USED IN PLACE OF W11-2 SIGNS AS APPROPRIATE PER THE MUTCD.
5. RRFB CABINET SHOULD BE POSITIONED SUCH THAT IT DOES NOT PROTRUDE INTO THE PEDESTRIAN CIRCULATION PATH. SEE PROWAG GUIDELINES FOR FURTHER INFORMATION.
6. LED LUMINAIRE SHOULD BE INSTALLED AT MOST 20-FT ABOVE ROADWAY, AIMED IN ADVANCE OF THE CROSSWALK, AND PROVIDE 20 VERTICAL LUX AT THE CROSSWALK.
7. LENGTH OF PEDESTRIAN REFUGE ISLAND AND PAVEMENT MARKING HATCHING TO BE DETERMINED USING ENGINEERING JUDGEMENT WITH CONSIDERATION TO SPEED LIMIT, DESIRED LEVEL OF ACCESS, AND OTHER RELEVANT SITE SPECIFIC FACTORS.

BY	REVISION	DATE
XJH	W16-7P SIZE; R10-25 DESIGN	07/01/26

DEPARTMENT OF TRANSPORTATION
STATE OF GEORGIA

CONSTRUCTION DETAIL

RECTANGULAR RAPID FLASHING BEACON (RRFB) PLAN

3 LANES (WITH PEDESTRIAN REFUGE ISLAND & OFFSET CROSSWALKS)

JULY 2024
NOT TO SCALE

NUMBER
T-27D

GDOT Georgia Department of Transportation | P. I. No.

REQUIRED SIGNS



W16-7P(R) 21''x 15''
W16-7P(L) 21''x 15''
R1-5B 36''x 36''
W11-2 36'' X 36''
R10-25 9'' X 12''
W16-9P 24'' X 12''

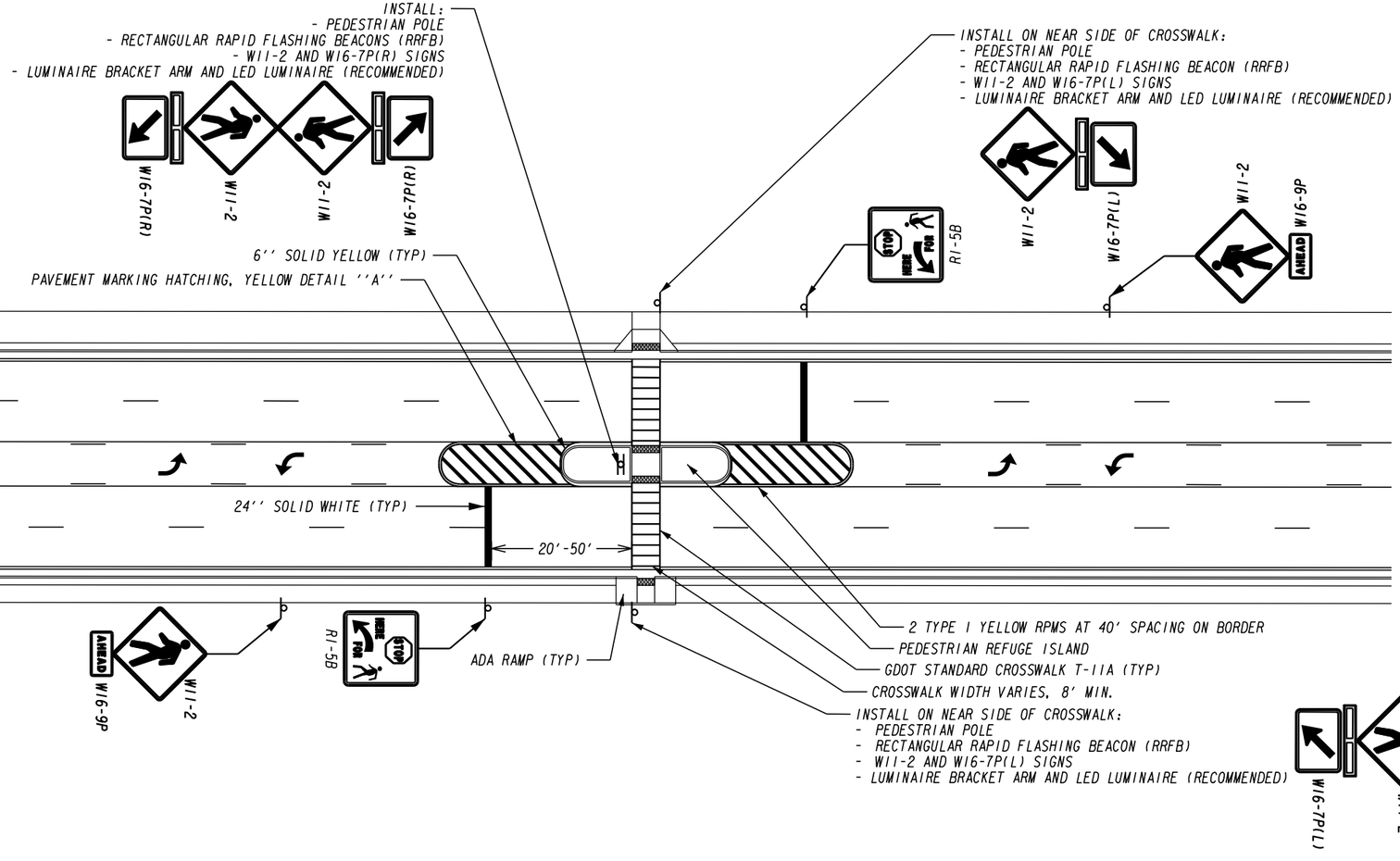

RECTANGULAR RAPID FLASHING BEACON

NOT TO SCALE

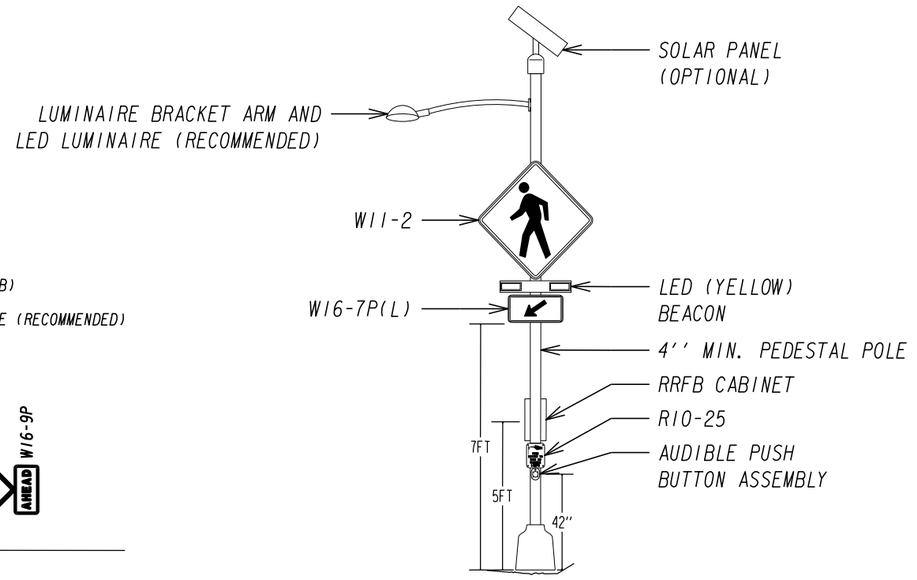

PEDESTRIAN REFUGE ISLAND DIMENSIONING

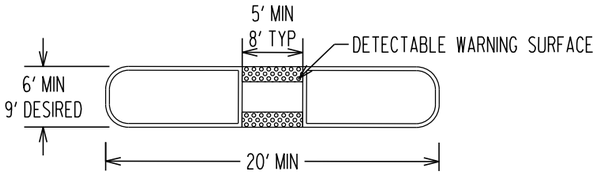

NOTE:
DIMENSIONING SHOWN IS TYPICAL FOR ALL ISLANDS WITH FLUSH OR SEMI-DEPRESSED CUT THROUGHS. ALL RAISED ISLANDS WITH WHEELCHAIR RAMPS SHALL PROVIDE A TURNING SPACE IN COMPLIANCE WITH GDOT DETAILS A-3 AND A-4.

NOTES:

1. RECTANGULAR RAPID-FLASHING BEACON MUST COMPLY WITH ALL MUTCD 11TH EDITION CHAPTER 4L STANDARDS.
2. PUSH BUTTON ASSEMBLY MUST COMPLY WITH ALL PROWAG GUIDELINES.
3. PLACEMENT OF THE W11-2 SIGN AND W16-9P PLAQUE ASSEMBLY SHOULD BE DETERMINED IN ACCORDANCE WITH MUTCD SECTION 2C.04.
4. W11-15 OR S1-1 SIGNS CAN BE USED IN PLACE OF W11-2 SIGNS AS APPROPRIATE PER THE MUTCD.
5. RRFB CABINET SHOULD BE POSITIONED SUCH THAT IT DOES NOT PROTRUDE INTO THE PEDESTRIAN CIRCULATION PATH. SEE PROWAG GUIDELINES FOR FURTHER INFORMATION.
6. LED LUMINAIRE SHOULD BE INSTALLED AT MOST 20-FT ABOVE ROADWAY, AIMED IN ADVANCE OF THE CROSSWALK, AND PROVIDE 20 VERTICAL LUX AT THE CROSSWALK.
7. LENGTH OF PEDESTRIAN REFUGE ISLAND AND PAVEMENT MARKING HATCHING TO BE DETERMINED USING ENGINEERING JUDGEMENT WITH CONSIDERATION TO SPEED LIMIT, DESIRED LEVEL OF ACCESS, AND OTHER RELEVANT SITE SPECIFIC FACTORS.

BY	REVISION	DATE
XJH	W16-7P SIZE; R10-25 DESIGN	07/01/26

DEPARTMENT OF TRANSPORTATION
STATE OF GEORGIA

CONSTRUCTION DETAIL

RECTANGULAR RAPID FLASHING BEACON (RRFB) PLAN

4+ LANES
(WITH PEDESTRIAN REFUGE ISLAND)

JULY 2024
NOT TO SCALE

NUMBER
T-27E

GDOT Georgia Department of Transportation | P. I. No.

REQUIRED SIGNS

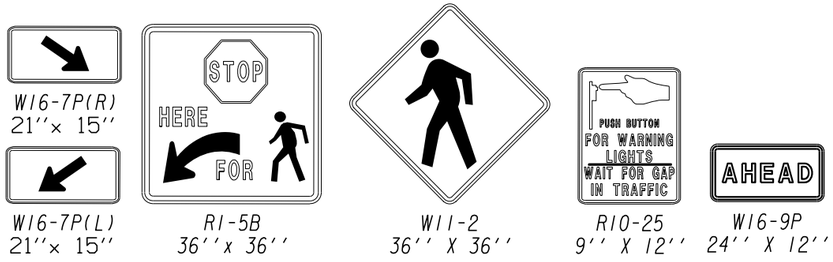

W16-7P(R) 21''× 15''
W16-7P(L) 21''× 15''
R1-5B 36''x 36''
W11-2 36'' X 36''
R10-25 9'' X 12''
W16-9P 24'' X 12''

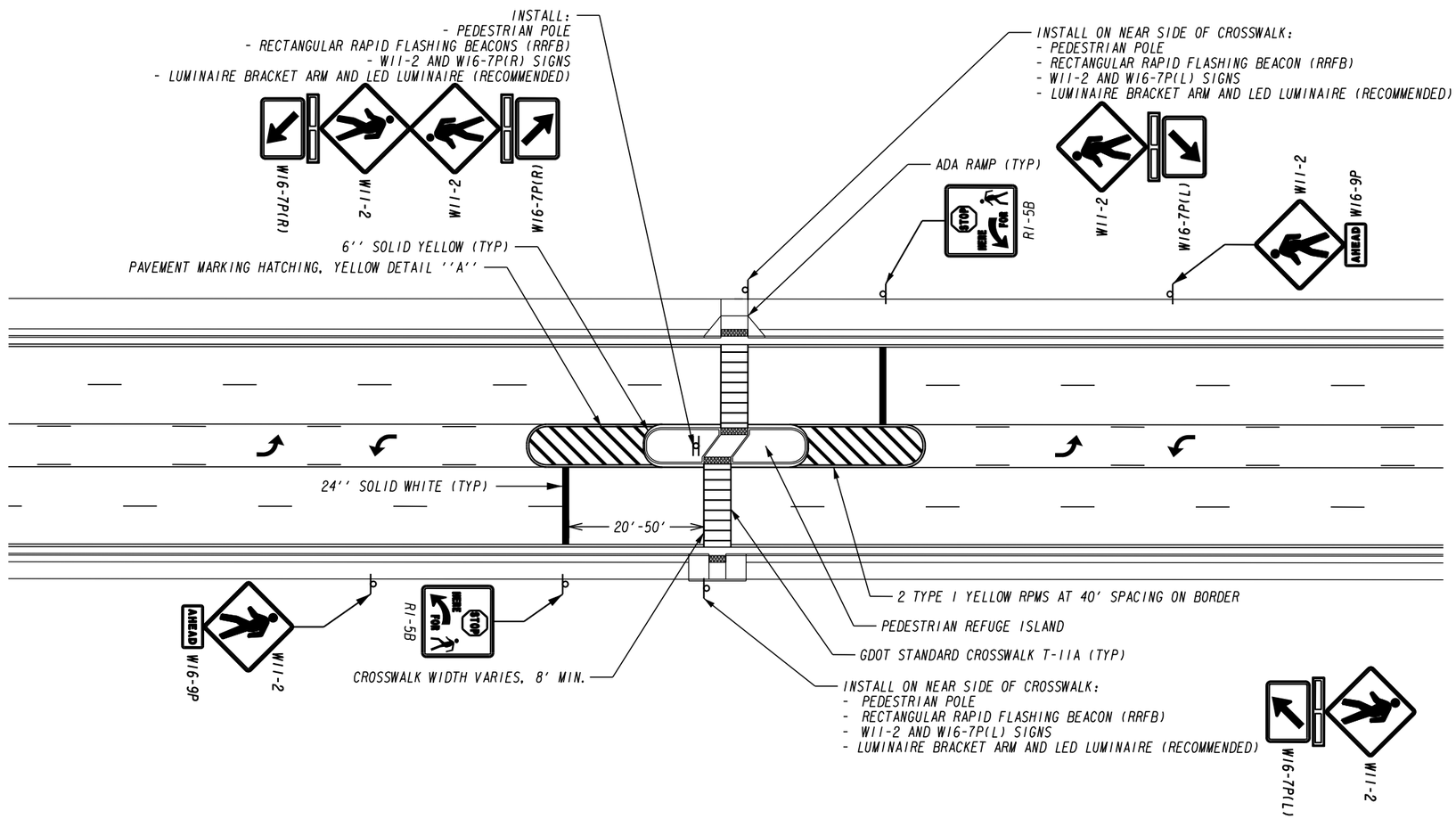

RECTANGULAR RAPID FLASHING BEACON

NOT TO SCALE

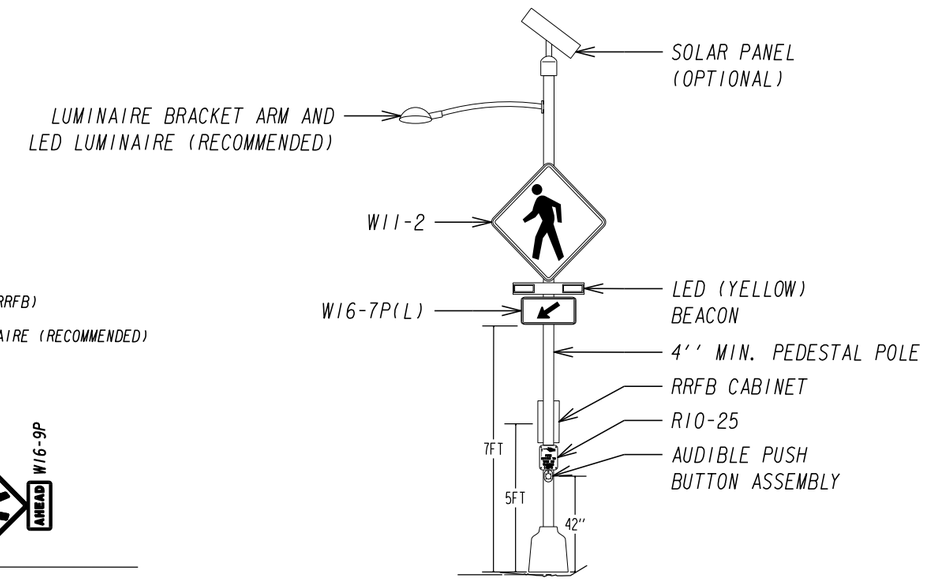

PEDESTRIAN REFUGE ISLAND DIMENSIONING

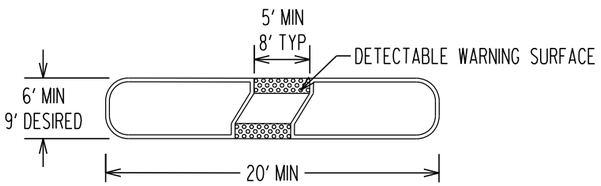

NOTE:
DIMENSIONING SHOWN IS TYPICAL FOR ALL ISLANDS WITH FLUSH OR SEMI-DEPRESSED CUT THROUGHS. ALL RAISED ISLANDS WITH WHEELCHAIR RAMPS SHALL PROVIDE A TURNING SPACE IN COMPLIANCE WITH GDOT DETAILS A-3 AND A-4.

NOTES:

1. *RECTANGULAR RAPID-FLASHING BEACON MUST COMPLY WITH ALL MUTCD 11TH EDITION CHAPTER 4L STANDARDS.*
2. *PUSH BUTTON ASSEMBLY MUST COMPLY WITH ALL PROWAG GUIDELINES.*
3. *PLACEMENT OF THE W11-2 SIGN AND W16-9P PLAQUE ASSEMBLY SHOULD BE DETERMINED IN ACCORDANCE WITH MUTCD SECTION 2C.04.*
4. *W11-15 OR S1-1 SIGNS CAN BE USED IN PLACE OF W11-2 SIGNS AS APPROPRIATE PER THE MUTCD.*
5. *RRFB CABINET SHOULD BE POSITIONED SUCH THAT IT DOES NOT PROTRUDE INTO THE PEDESTRIAN CIRCULATION PATH. SEE PROWAG GUIDELINES FOR FURTHER INFORMATION.*
6. *LED LUMINAIRE SHOULD BE INSTALLED AT MOST 20-FT ABOVE ROADWAY, AIMED IN ADVANCE OF THE CROSSWALK, AND PROVIDE 20 VERTICAL LUX AT THE CROSSWALK.*
7. *LENGTH OF PEDESTRIAN REFUGE ISLAND AND PAVEMENT MARKING HATCHING TO BE DETERMINED USING ENGINEERING JUDGEMENT WITH CONSIDERATION TO SPEED LIMIT, DESIRED LEVEL OF ACCESS, AND OTHER RELEVANT SITE SPECIFIC FACTORS.*

			07/01/26	DATE
		W16-7P SIZE; R10-25 DESIGN		REVISION
		XJH		BY

DEPARTMENT OF TRANSPORTATION
STATE OF GEORGIA

CONSTRUCTION DETAIL

RECTANGULAR RAPID FLASHING BEACON (RRFB) PLAN

4+ LANES (WITH PEDESTRIAN REFUGE ISLAND & OFFSET CROSSWALKS)

JULY 2024
NOT TO SCALE

NUMBER
T-27F

GDOT Georgia Department of Transportation | P. I. No.

REQUIRED SIGNS

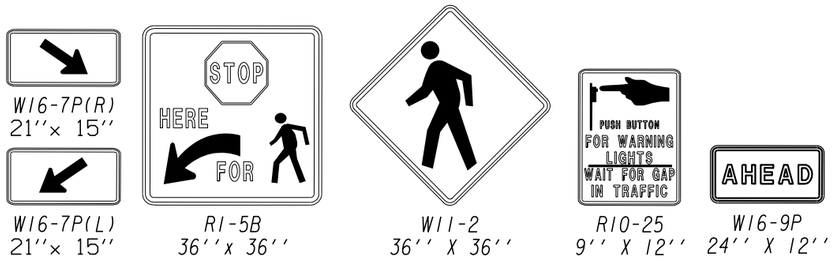

W16-7P(R) 21''× 15''
W16-7P(L) 21''× 15''
R1-5B 36''x 36''
W11-2 36'' X 36''
R10-25 9'' X 12''
W16-9P 24'' X 12''

RECTANGULAR RAPID FLASHING BEACON

NOT TO SCALE

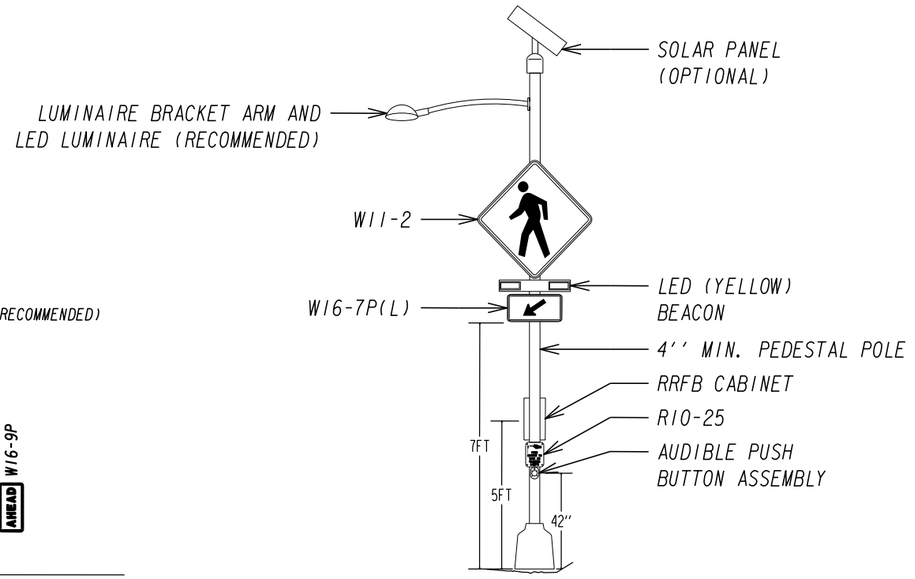

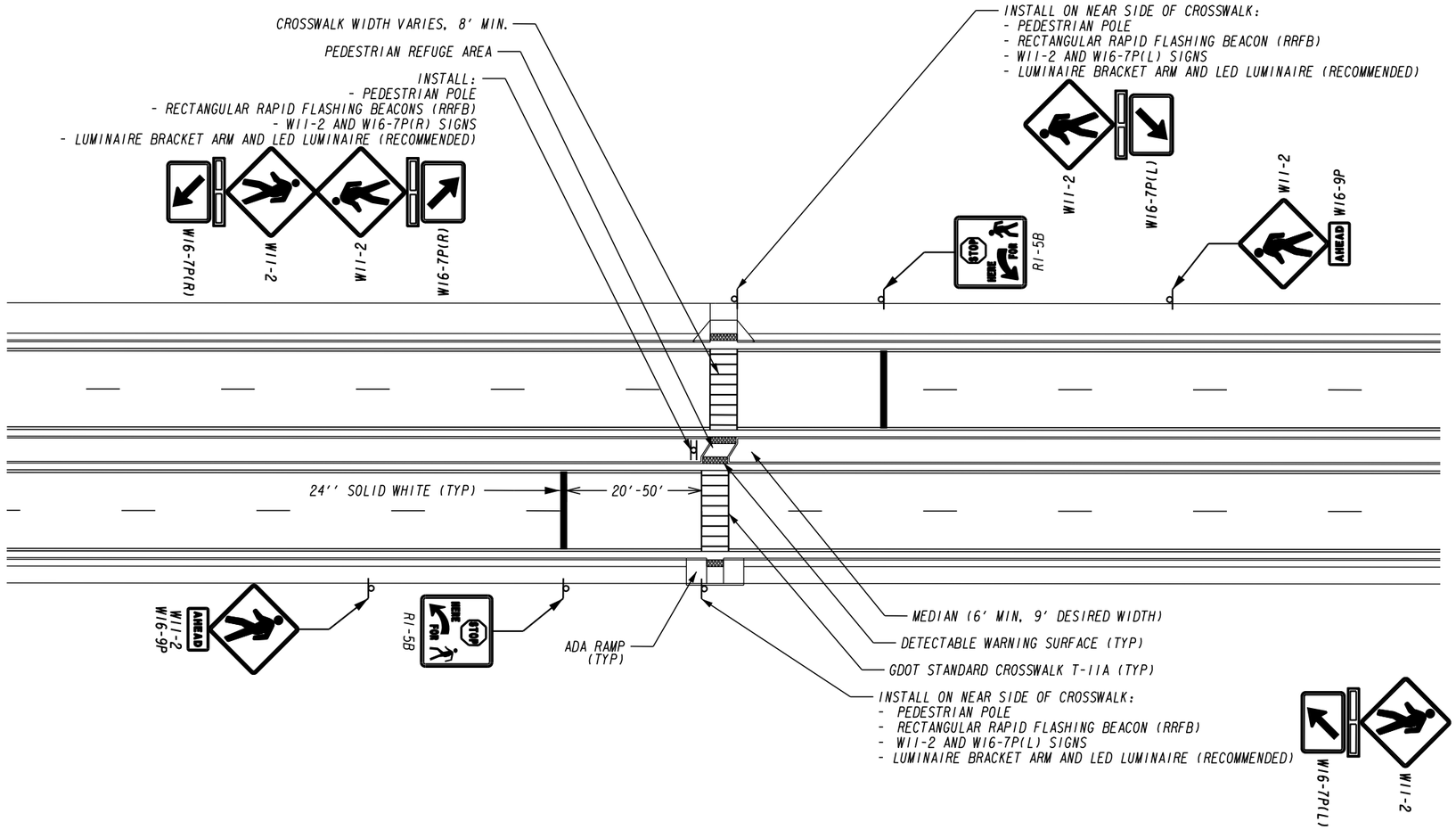

NOTES:

1. RECTANGULAR RAPID-FLASHING BEACON MUST COMPLY WITH ALL MUTCD 11TH EDITION CHAPTER 4L STANDARDS.
2. PUSH BUTTON ASSEMBLY MUST COMPLY WITH ALL PROWAG GUIDELINES.
3. PLACEMENT OF THE W11-2 SIGN AND W16-9P PLAQUE ASSEMBLY SHOULD BE DETERMINED IN ACCORDANCE WITH MUTCD SECTION 2C.04.
4. W11-15 OR S1-1 SIGNS CAN BE USED IN PLACE OF W11-2 SIGNS AS APPROPRIATE PER THE MUTCD.
5. RRFB CABINET SHOULD BE POSITIONED SUCH THAT IT DOES NOT PROTRUDE INTO THE PEDESTRIAN CIRCULATION PATH. SEE PROWAG GUIDELINES FOR FURTHER INFORMATION.
6. LED LUMINAIRE SHOULD BE INSTALLED AT MOST 20-FT ABOVE ROADWAY, AIMED IN ADVANCE OF THE CROSSWALK, AND PROVIDE 20 VERTICAL LUX AT THE CROSSWALK.

				07/01/26	DATE
				W16-7P SIZE; R10-25 DESIGN	REVISION
				XJH	BY

DEPARTMENT OF TRANSPORTATION
STATE OF GEORGIA

CONSTRUCTION DETAIL

RECTANGULAR RAPID FLASHING BEACON (RRFB) PLAN

4+ LANES (WITH RAISED MEDIAN & OFFSET CROSSWALKS)

JULY 2024
NOT TO SCALE

NUMBER
T-27G

GDOT Georgia Department of Transportation | P. I. No.

REQUIRED SIGNS

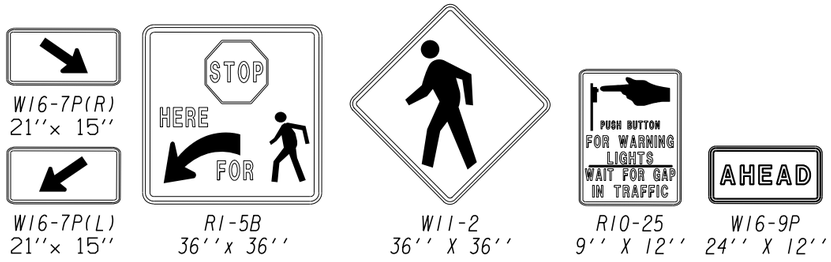

W16-7P(R) 21''× 15''
W16-7P(L) 21''× 15''
R1-5B 36''x 36''
W11-2 36'' X 36''
R10-25 9'' X 12''
W16-9P 24'' X 12''

RECTANGULAR RAPID FLASHING BEACON

NOT TO SCALE

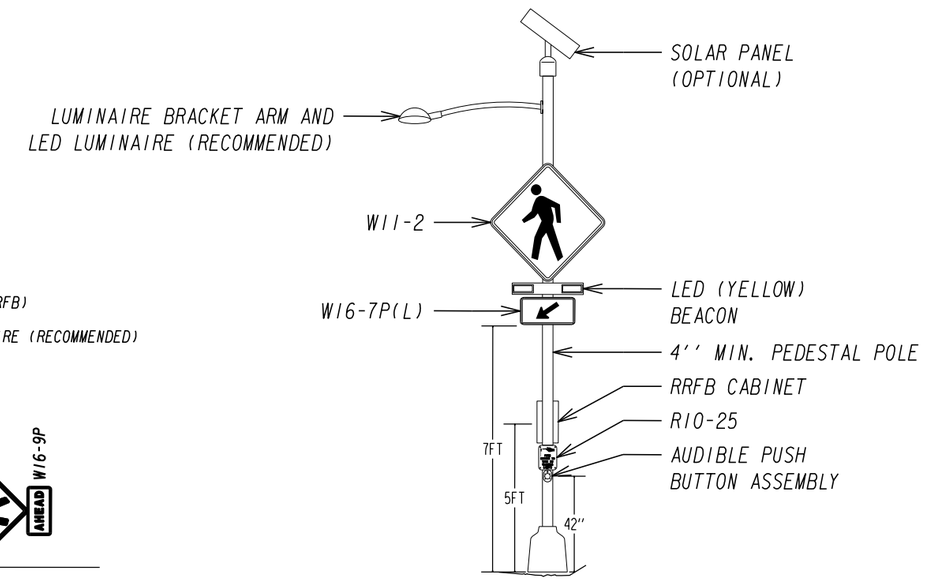

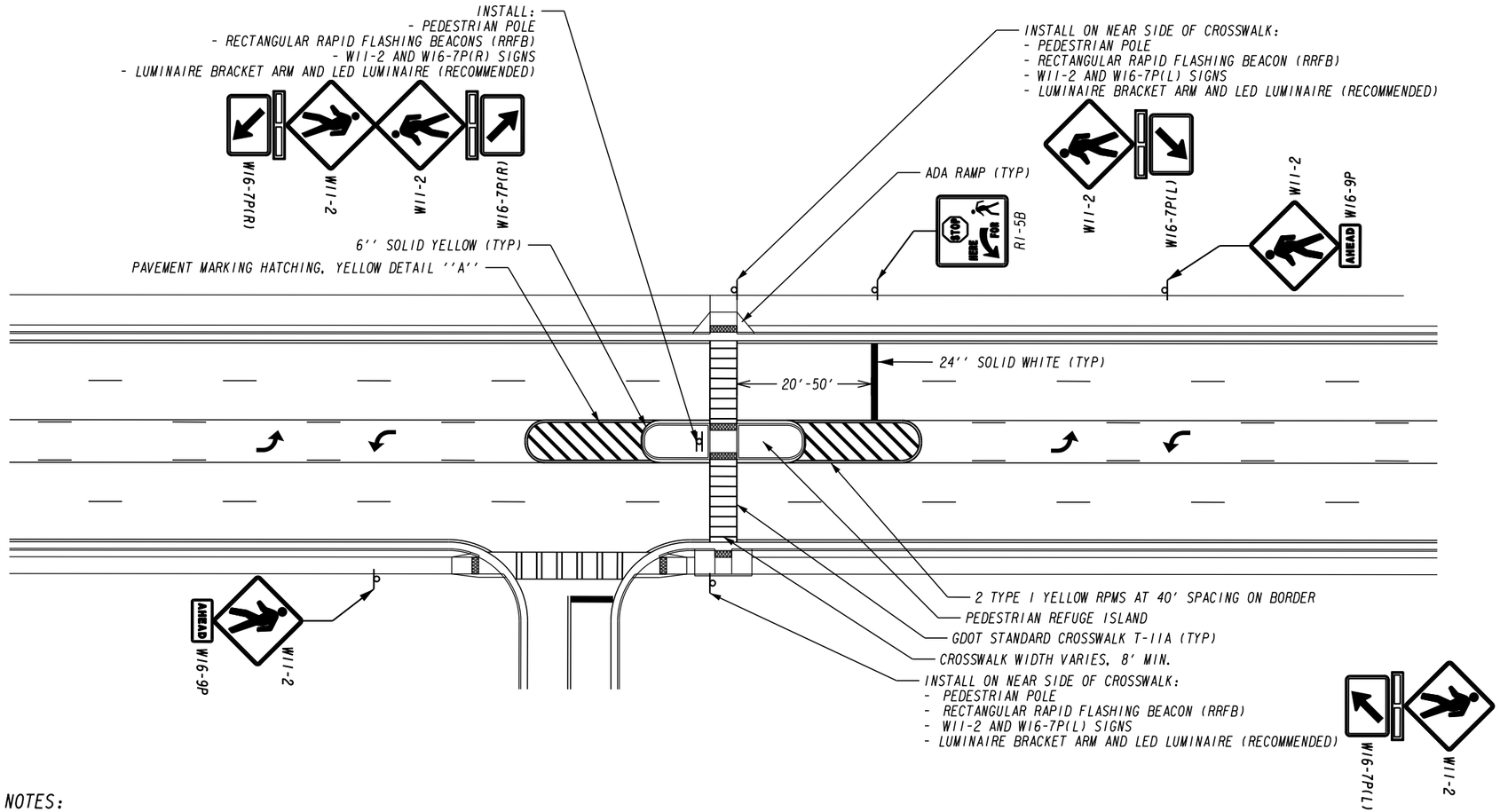

PEDESTRIAN REFUGE ISLAND DIMENSIONING

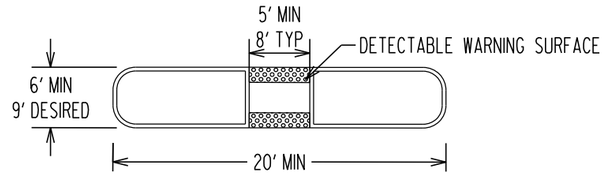

NOTE:
DIMENSIONING SHOWN IS TYPICAL FOR ALL ISLANDS WITH FLUSH OR SEMI-DEPRESSED CUT THROUGHS. ALL RAISED ISLANDS WITH WHEELCHAIR RAMPS SHALL PROVIDE A TURNING SPACE IN COMPLIANCE WITH GDOT DETAILS A-3 AND A-4.

NOTES:

1. IF A SIDE STREET APPROACH IS CONTAINED ENTIRELY WITHIN THE 100-FT IN ADVANCE OF CROSSWALK, A STOP LINE SHOULD NOT BE MARKED.
2. RECTANGULAR RAPID-FLASHING BEACON MUST COMPLY WITH ALL MUTCD 11TH EDITION CHAPTER 4L STANDARDS.
3. PUSH BUTTON ASSEMBLY MUST COMPLY WITH ALL PROWAG GUIDELINES.
4. PLACEMENT OF THE W11-2 SIGN AND W16-9P PLAQUE ASSEMBLY SHOULD BE DETERMINED IN ACCORDANCE WITH MUTCD SECTION 2C.04.
5. W11-15 OR S1-1 SIGNS CAN BE USED IN PLACE OF W11-2 SIGNS AS APPROPRIATE PER THE MUTCD.
6. RRFB CABINET SHOULD BE POSITIONED SUCH THAT IT DOES NOT PROTRUDE INTO THE PEDESTRIAN CIRCULATION PATH. SEE PROWAG GUIDELINES FOR FURTHER INFORMATION.
7. LED LUMINAIRE SHOULD BE INSTALLED AT MOST 20-FT ABOVE ROADWAY, AIMED IN ADVANCE OF THE CROSSWALK, AND PROVIDE 20 VERTICAL LUX AT THE CROSSWALK.
8. LENGTH OF PEDESTRIAN REFUGE ISLAND AND PAVEMENT MARKING HATCHING TO BE DETERMINED USING ENGINEERING JUDGEMENT WITH CONSIDERATION TO SPEED LIMIT, DESIRED LEVEL OF ACCESS, AND OTHER RELEVANT SITE SPECIFIC FACTORS.

BY	DATE
XJH	07/01/26

W16-7P SIZE; R10-25 DESIGN REVISION

DEPARTMENT OF TRANSPORTATION
STATE OF GEORGIA

CONSTRUCTION DETAIL

RECTANGULAR RAPID FLASHING BEACON (RRFB) PLAN

NEAR SIDE STREET / DRIVEWAY

JULY 2024
NOT TO SCALE

NUMBER
T-27H

GDOT Georgia Department of Transportation | P. I. No. XXXXXXX

TYPICAL SECTIONS

INSIDE PAVED SHOULDER WITH 16'' MILLED RUMBLE STRIPS

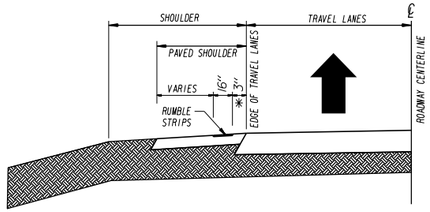

OUTSIDE PAVED SHOULDER WITH 16'' MILLED RUMBLE STRIPS

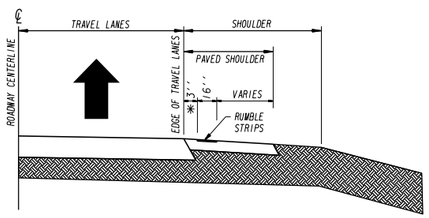

OGFC OR PEM, ≥30" PAVED SHOULDER WITH 16" MILLED RUMBLE STRIPS

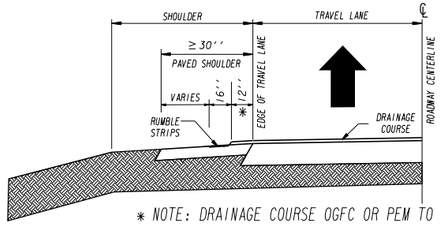

* NOTE: DRAINAGE COURSE OGFC OR PEM TO BE PLACED ON TO THE SHOULDER PAVING A DISTANCE OF 12'' ON THE INSIDE SHOULDER.

OGFC OR PEM, ≥ 3' PAVED SHOULDER WITH 16" MILLED RUMBLE STRIPS

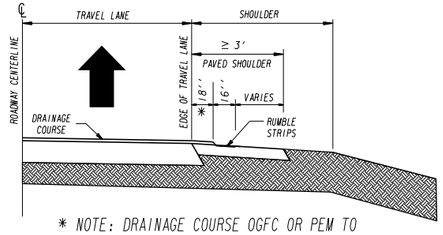

* NOTE: DRAINAGE COURSE OGFC OR PEM TO BE PLACED ON TO THE SHOULDER PAVING A DISTANCE OF 18'' ON THE OUTSIDE SHOULDER.

ENTRANCE RAMP

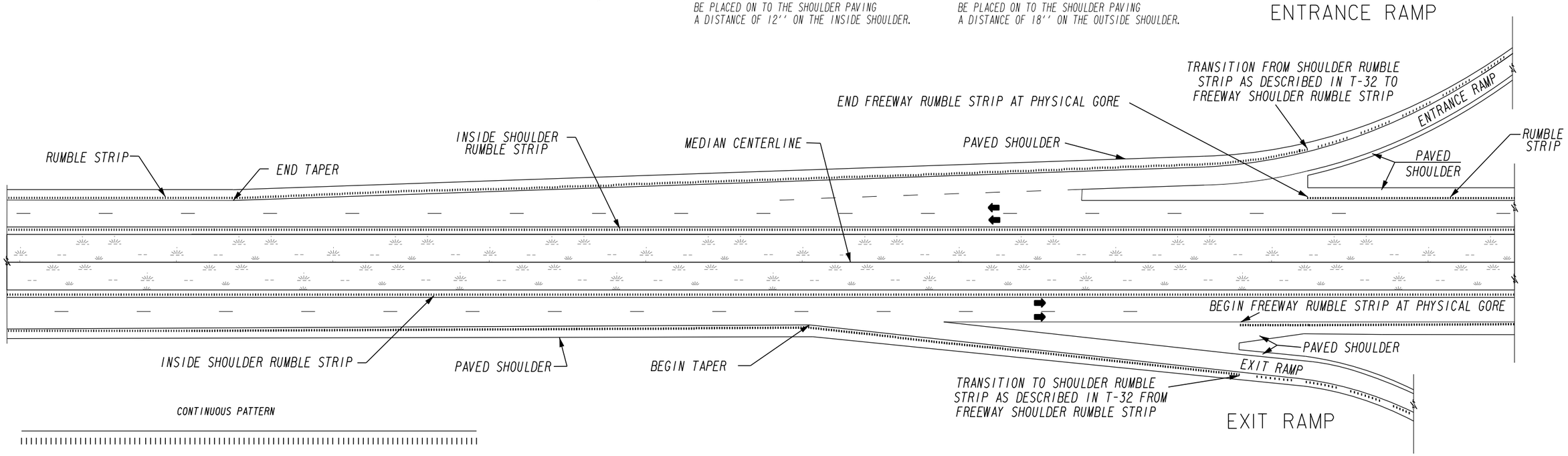

FREEWAY SHOULDER RUMBLE STRIP DETAILS

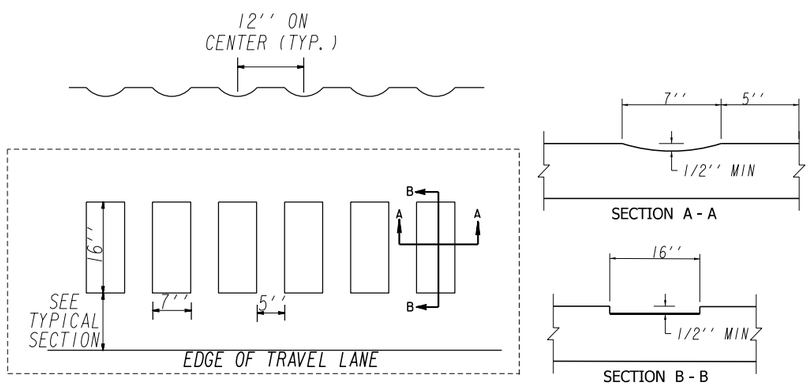

DATE	REVISION	BY
07-01-25	REM. 'ASPHALT' FROM TITLE RENAMED FRWY SHLDR DET.	PJN

DEPARTMENT OF TRANSPORTATION
STATE OF GEORGIA

CONSTRUCTION DETAIL
SHOULDER RUMBLE STRIP: FREEWAY

JULY 2024
NOT TO SCALE

NUMBER T-30

GDOT Georgia Department of Transportation | P. I. No. XXXXXXX

OUTSIDE SHOULDER RUMBLE STRIP PLACEMENT AT INTERSECTIONS WITH RIGHT TURN LANES OR TURNING EYEBROWS

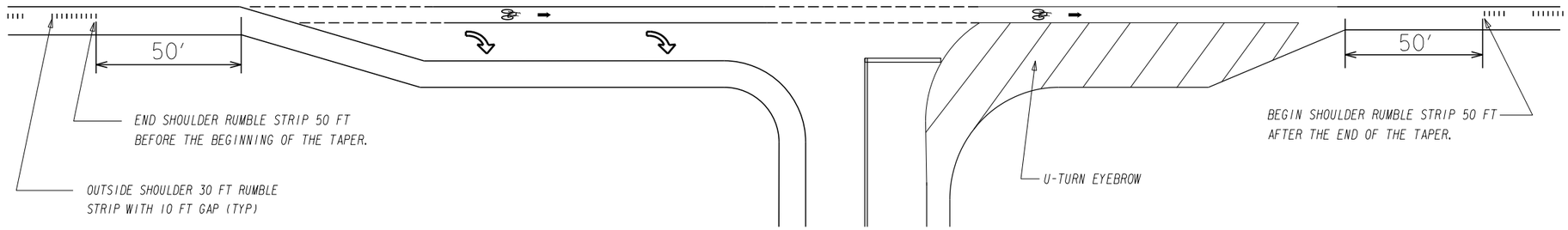

OUTSIDE SHOULDER RUMBLE STRIP PLACEMENT AT DRIVEWAYS/ SIDESTREETS AND TRANSITION FROM RURAL TO URBAN SHOULDER

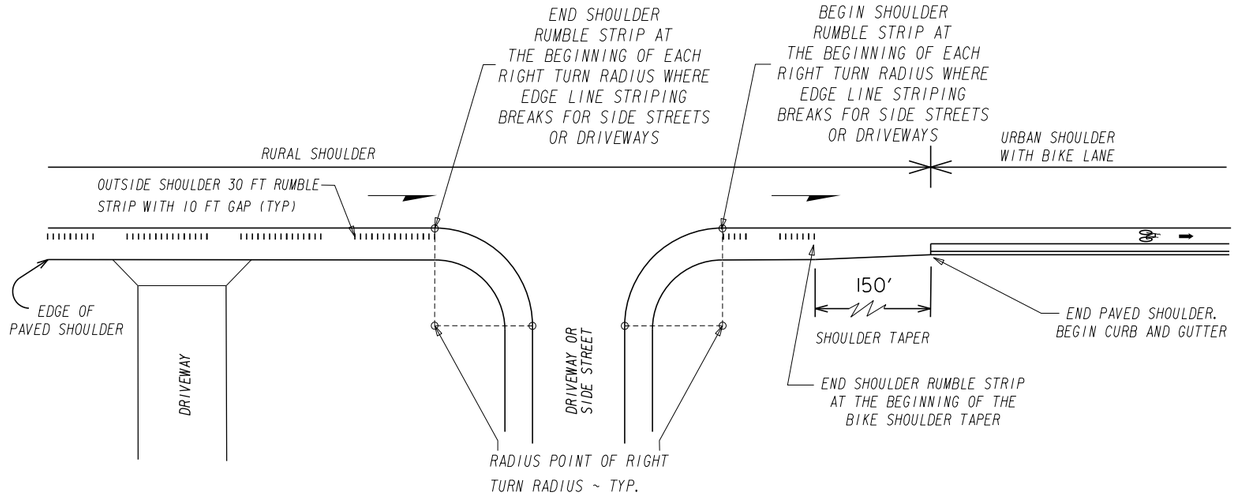

NOTES: SHOULDER RUMBLE STRIPS SHALL CONTINUE ON THE PAVED SHOULDER IN FRONT OF RESIDENTIAL DRIVEWAYS OR ANY DRIVEWAY WITHOUT A RADIUS

IN RETROFIT SITUATIONS WHERE CONCRETE DRIVEWAYS TIE DIRECTLY INTO THE MAINLINE, DO NOT PLACE RUMBLE STRIPS ON THE DRIVEWAY

INSIDE SHOULDER RUMBLE STRIP PLACEMENT AT INTERSECTIONS WITH TURN LANES

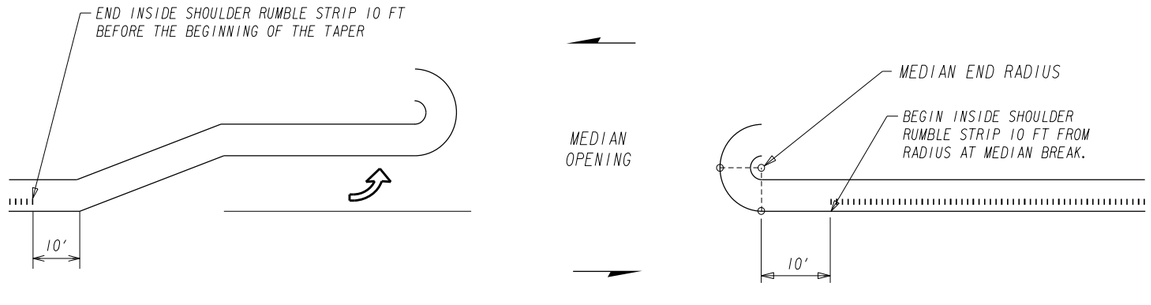

INSIDE SHOULDER RUMBLE STRIP PLACEMENT AT INTERSECTIONS WITHOUT TURN LANES

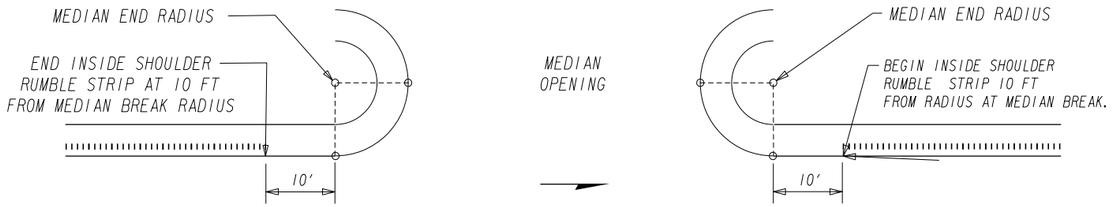

GENERAL NOTES:

REFER TO T-32 FOR SHOULDER RUMBLE STRIP DETAILS

DEPARTMENT OF TRANSPORTATION
STATE OF GEORGIA

CONSTRUCTION DETAIL
SHOULDER RUMBLE STRIP: NON-FREEWAY PLACEMENT

DATE | REVISION | BY

JULY 2024
NOT TO SCALE

NUMBER T-31

SHOULDER RUMBLE STRIP TYPICAL SECTIONS

INSIDE

≥ 2′ PAVED SHOULDER WITH 16′′ MILLED RUMBLE STRIPS (CONTINUOUS PATTERN)

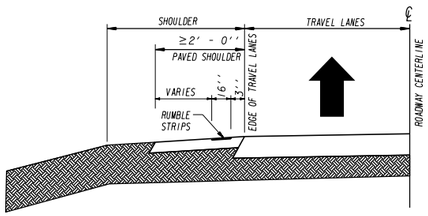

OGFC OR PEM, ≥ 30′′ PAVED SHOULDER WITH 16′′ MILLED RUMBLE STRIPS

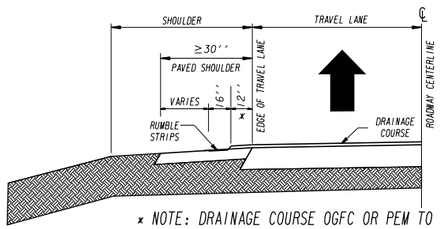

x NOTE: DRAINAGE COURSE OGFC OR PEM TO BE PLACED ON TO THE SHOULDER PAVING A DISTANCE OF 12′′ ON THE INSIDE SHOULDER.

OUTSIDE

≥6.5′ PAVED SHOULDER WITH 16′′ MILLED RUMBLE STRIPS (SKIP PATTERN)

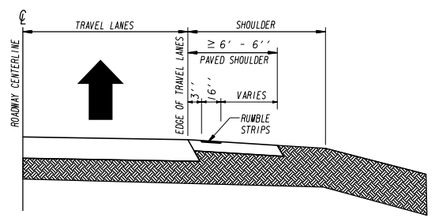

OGFC OR PEM, ≥ 3′ xx PAVED SHOULDER WITH 16′′ MILLED RUMBLE STRIPS

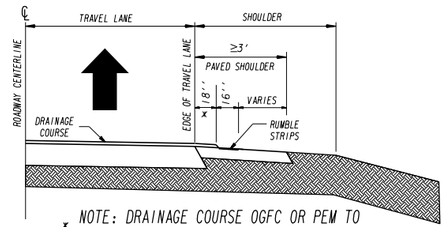

x NOTE: DRAINAGE COURSE OGFC OR PEM TO BE PLACED ON TO THE SHOULDER PAVING A DISTANCE OF 18′′ ON THE OUTSIDE SHOULDER.

xx NOTE: TO ACCOMMODATE BIKING ON THE SHOULDER, PAVED SHOULDER MUST BE A MINIMUM OF 7′ WIDE.

1′≤ x < 2′ WITH IN-LANE BICYCLE ACCOMMODATION OR
5′≤ x <6.5′ WITH SHOULDER BICYCLE ACCOMMODATION

PAVED SHOULDER WITH 6′′ MILLED RUMBLE STRIPS

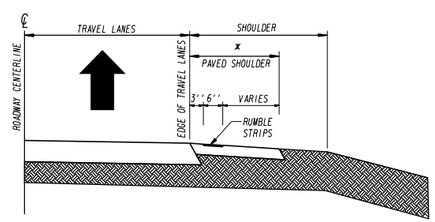

NOTE: USE THIS SECTION WHEN PROVIDING FOR IN-LANE OR SHOULDER BICYCLE ACCOMMODATION.

OUTSIDE SKIP PATTERN



SHOULDER CYLINDRICAL RUMBLE STRIP DETAILS

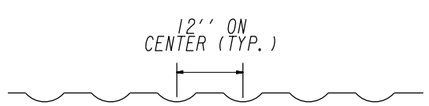

16′′ CYLINDRICAL RUMBLE STRIPS

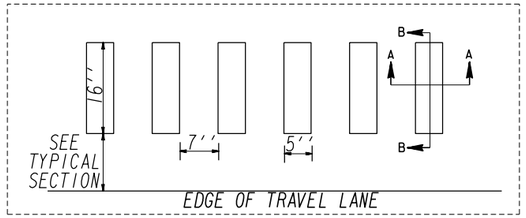

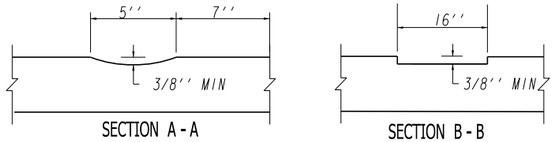

6′′ CYLINDRICAL RUMBLE STRIPS FOR NARROW SHOULDERS
≥ 1′ AND < 2′ PAVED WITH IN-LANE BICYCLE ACCOMMODATION
OR
≥ 5′ AND < 6.5′ PAVED WITH SHOULDER BICYCLE ACCOMMODATION

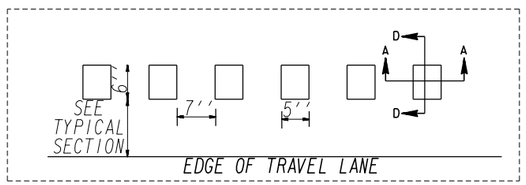

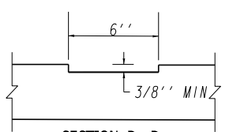

SHOULDER SINUSOIDAL RUMBLE STRIP DETAILS

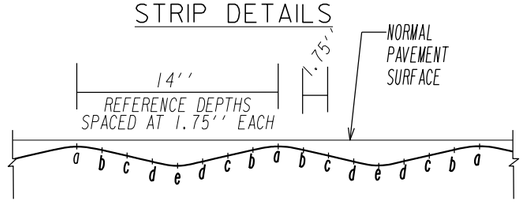

	DEPTH	
LOCATION	MIL	INCHES
a	62.5	1/16′′
b	156	5/32′′
c	281	9/32′′
d	438	7/16′′
e	500	1/2′′

16′′ SINUSOIDAL RUMBLE STRIPS

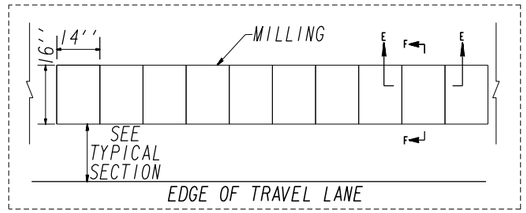

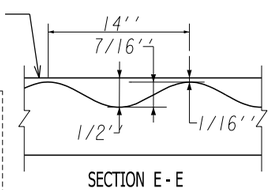

SECTION E-E

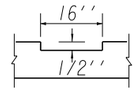

SECTION F-F
(TROUGH OF SINUSOIDAL WAVE)

6′′ SINUSOIDAL RUMBLE STRIPS FOR NARROW SHOULDERS
≥ 1′ AND < 2′ PAVED WITH IN-LANE BICYCLE ACCOMMODATION
OR
≥ 5′ AND < 6.5′ PAVED WITH SHOULDER BICYCLE ACCOMMODATION

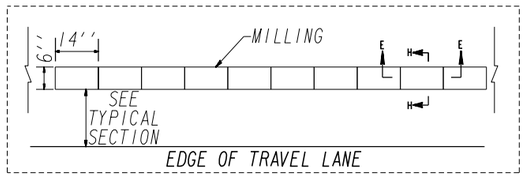

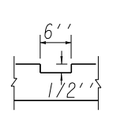

SECTION H-H
(TROUGH OF SINUSOIDAL WAVE)

GDOT Georgia Department of Transportation

P.I. No. XXXXXXX

DEPARTMENT OF TRANSPORTATION
STATE OF GEORGIA

CONSTRUCTION DETAIL
SHOULDER RUMBLE STRIP: NON-FREEWAY DETAILS

DATE | REVISION | BY

JULY 2024
NOT TO SCALE

NUMBER T-32

GDOT Georgia Department of Transportation | P. I. No. XXXXXXX

CENTERLINE RUMBLE STRIP PLACEMENT AT INTERSECTIONS

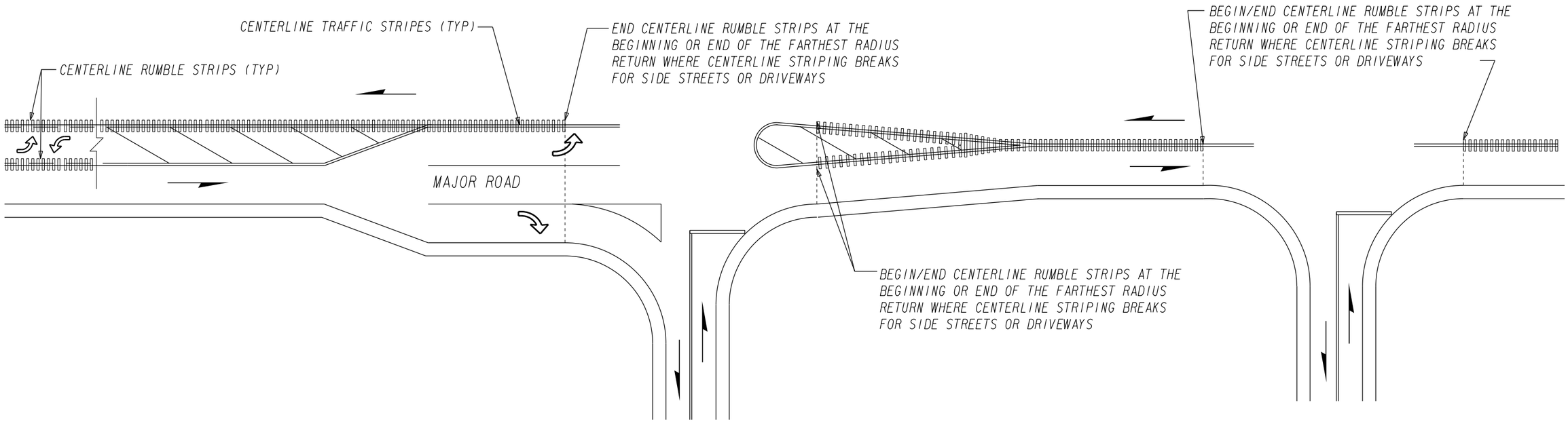

CENTERLINE RUMBLE STRIP PLACEMENT AT DRIVEWAYS

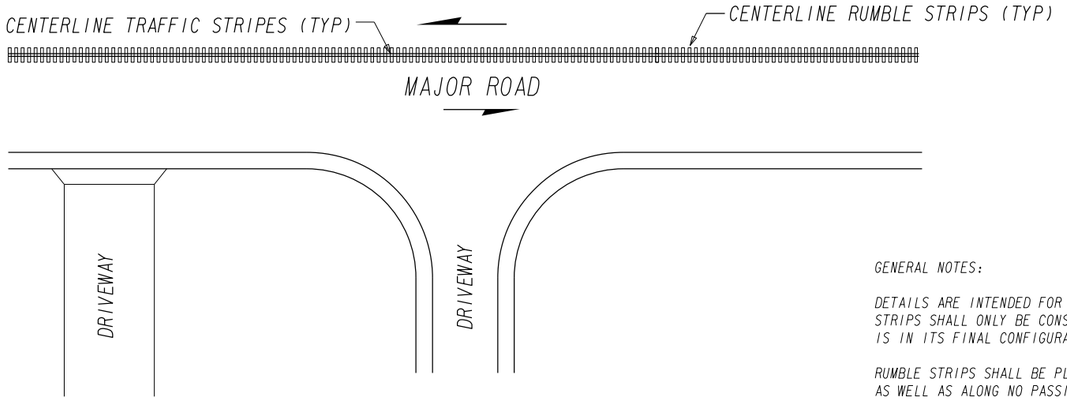

GENERAL NOTES:

DETAILS ARE INTENDED FOR ASPHALT ROADWAYS. MILLED CENTERLINE RUMBLE STRIPS SHALL ONLY BE CONSIDERED ON A CONCRETE ROADWAY IF IT IS IN ITS FINAL CONFIGURATION.

RUMBLE STRIPS SHALL BE PLACED ALONG TWO-WAY LEFT TURN LANE STRIPING AS WELL AS ALONG NO PASSING ZONE STRIPING.

NO RUMBLE STRIPS SHALL BE PLACED IN PASSING ZONES.

SEE DETAIL T-34 FOR DETAILS OF CENTERLINE RUMBLE STRIPS.

DATE	REVISION	BY

DEPARTMENT OF TRANSPORTATION
STATE OF GEORGIA

CONSTRUCTION DETAIL
CENTERLINE RUMBLE STRIP PLACEMENT

JULY 2024
NOT TO SCALE

NUMBER T-33

CENTERLINE CYLINDRICAL RUMBLE STRIP DETAILS

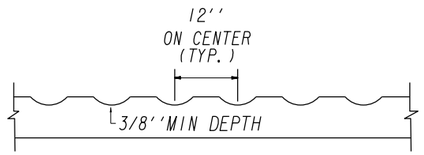

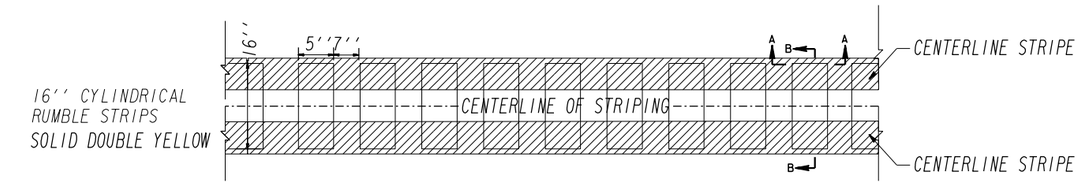

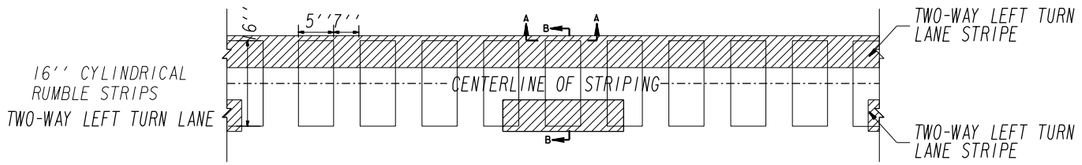

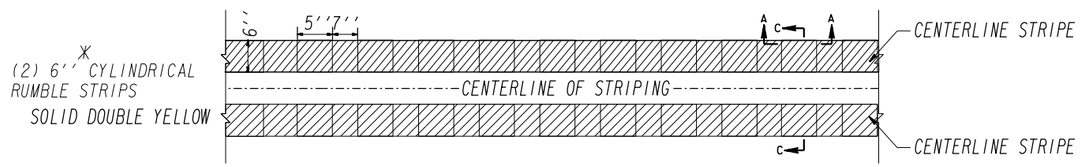

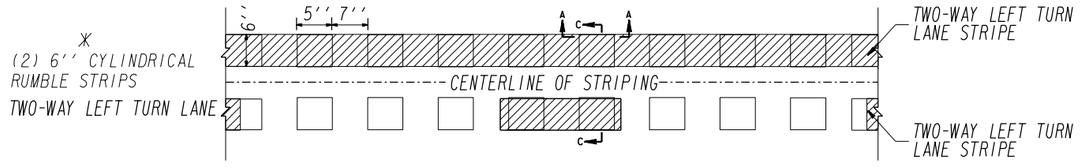

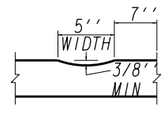

SECTION A - A

16'' MILLED CYLINDRICAL RUMBLE STRIPS

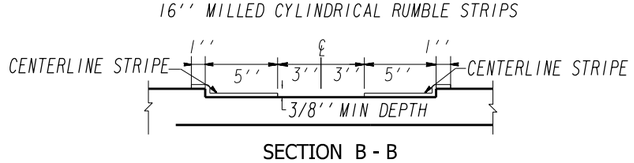

SECTION B - B

(2) 6'' MILLED CYLINDRICAL RUMBLE STRIPS

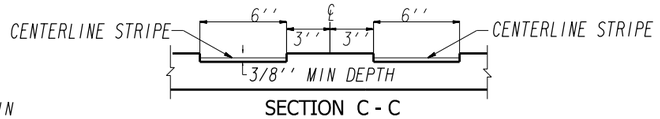

SECTION C - C

* THE 6'' OPTION IS TO BE USED IN CIRCUMSTANCES WHERE THE EXISTING ROADWAY IS BEING RETRO-FITTED TO INCLUDE CENTERLINE RUMBLE STRIPS, OR TO REDUCE IMPACTS TO CENTER PAVEMENT JOINT.

CENTERLINE SINUSOIDAL RUMBLE STRIP DETAILS

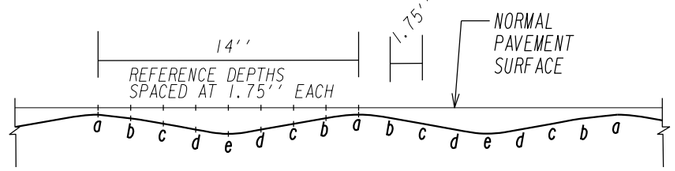

	DEPTH	
LOCATION	MIL	INCHES
a	62.5	1/16''
b	156	5/32''
c	281	9/32''
d	438	7/16''
e	500	1/2''

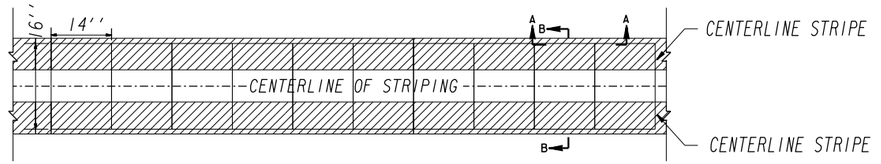

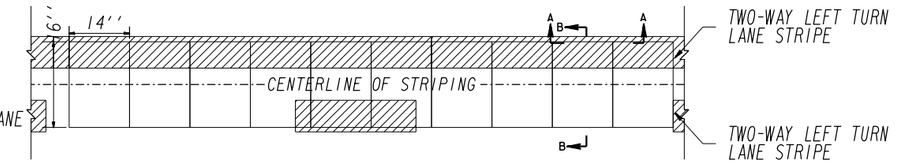

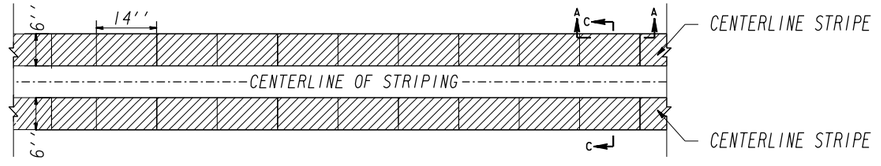

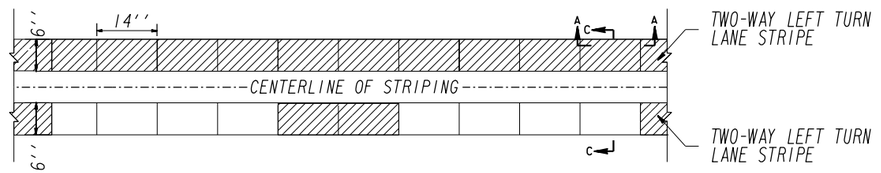

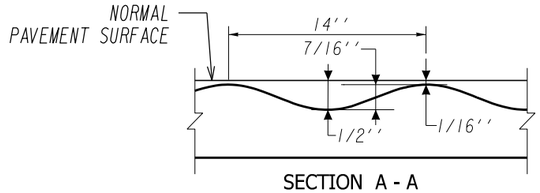

SECTION A - A

16'' MILLED SINUSOIDAL RUMBLE STRIPS

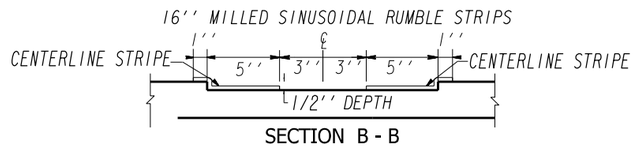

SECTION B - B
(TROUGH OF SINUSOIDAL WAVE)

(2) 6'' MILLED SINUSOIDAL RUMBLE STRIPS

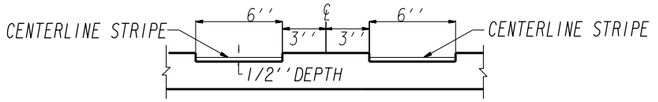

SECTION C - C
(TROUGH OF SINUSOIDAL WAVE)

GDOT Georgia Department of Transportation | P.I. No. XXXXXXX

DEPARTMENT OF TRANSPORTATION
STATE OF GEORGIA

CONSTRUCTION DETAIL
CENTERLINE RUMBLE STRIP DETAILS

DATE | REVISION | BY

JULY 2024
NOT TO SCALE

NUMBER
T-34

GDOT Georgia Department of Transportation | P. I. No. XXXXXXX

OUTSIDE EDGE LINE RUMBLE STRIP PLACEMENT AT INTERSECTIONS WITH RIGHT TURN LANES OR TURNING EYEBROWS

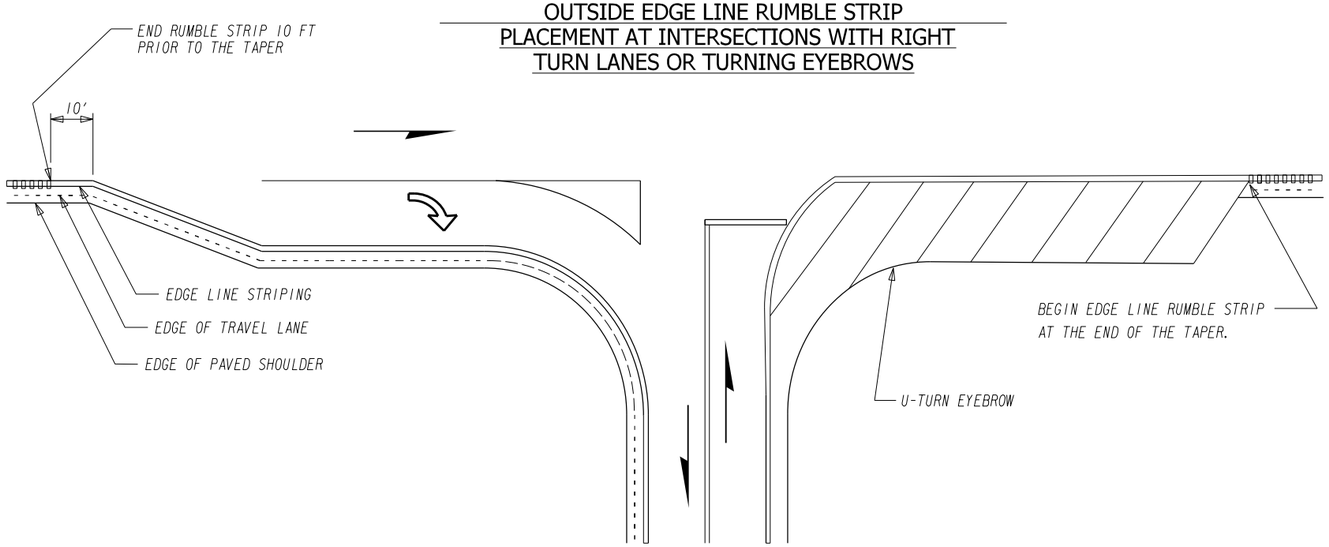

INSIDE EDGE LINE RUMBLE STRIP PLACEMENT AT MEDIAN OPENINGS/ INTERSECTIONS WITH TURN LANES

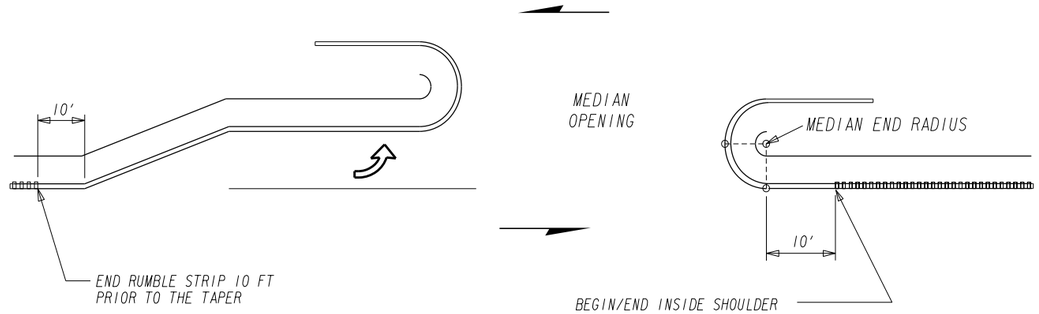

OUTSIDE EDGE LINE RUMBLE STRIP PLACEMENT AT DRIVEWAYS AND SIDE STREETS

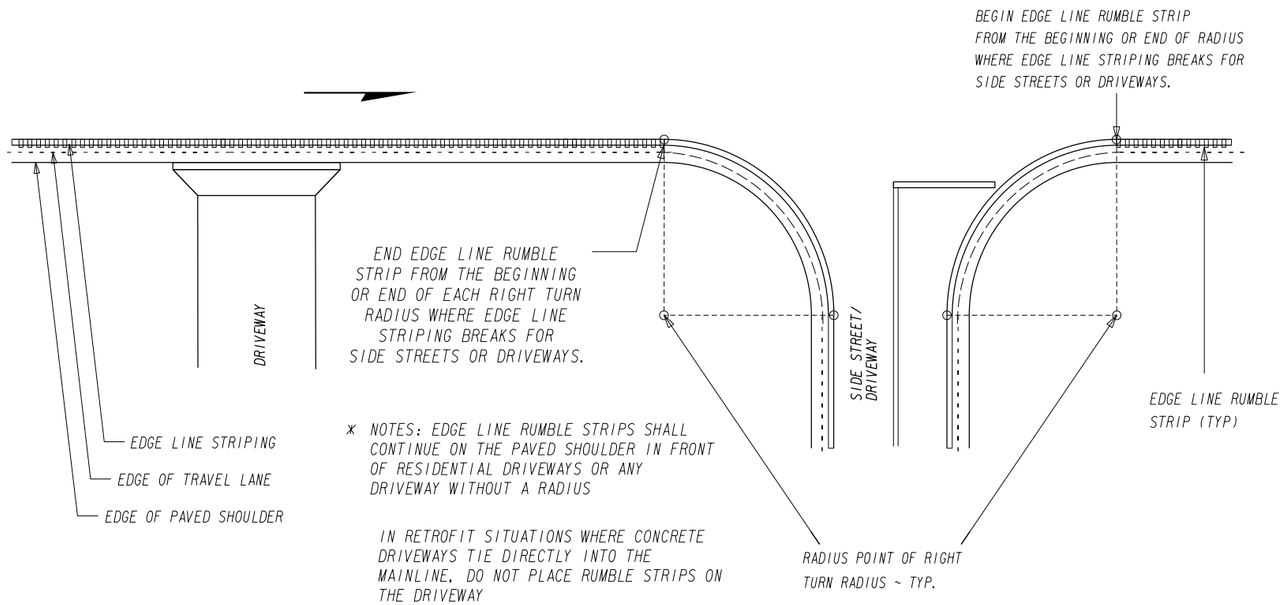

* NOTES: EDGE LINE RUMBLE STRIPS SHALL CONTINUE ON THE PAVED SHOULDER IN FRONT OF RESIDENTIAL DRIVEWAYS OR ANY DRIVEWAY WITHOUT A RADIUS

IN RETROFIT SITUATIONS WHERE CONCRETE DRIVEWAYS TIE DIRECTLY INTO THE MAINLINE, DO NOT PLACE RUMBLE STRIPS ON THE DRIVEWAY

INSIDE EDGE LINE RUMBLE STRIP PLACEMENT AT MEDIAN OPENINGS/ INTERSECTIONS WITHOUT TURN LANES

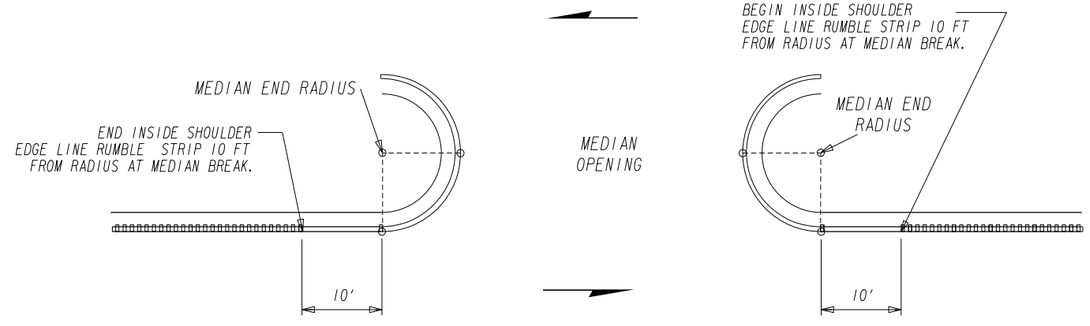

GENERAL NOTE:

REFER TO T-36 FOR EDGE LINE RUMBLE STRIP DETAILS

DEPARTMENT OF TRANSPORTATION
STATE OF GEORGIA

CONSTRUCTION DETAIL

EDGE LINE RUMBLE STRIP: NON-FREEWAY PLACEMENT

DATE | REVISION | BY

JULY 2024

NOT TO SCALE

NUMBER T-35

GDOT Georgia Department of Transportation | P. I. No. XXXXXXX

EDGE LINE CYLINDRICAL RUMBLE STRIP DETAILS

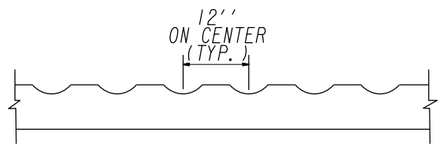

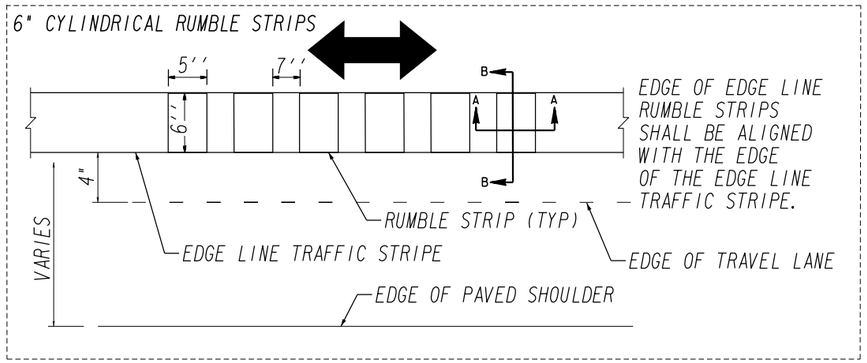

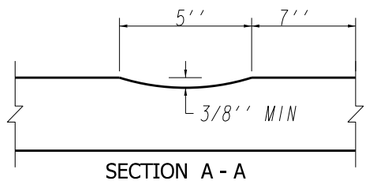

SECTION A - A

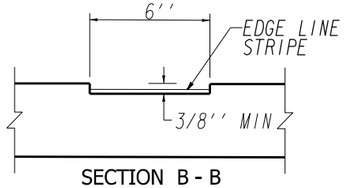

SECTION B - B

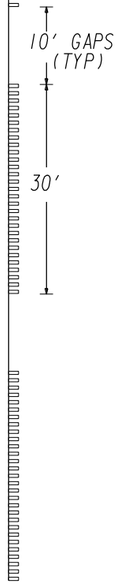

EDGELINE RUMBLE STRIP SKIP PATTERN OUTSIDE SHOULDERS ≥ 2' AND < 5'

EDGELINE RUMBLE STRIP CONTINUOUS PATTERN INSIDE OR OUTSIDE SHOULDERS < 2'

EDGE LINE SINUSOIDAL RUMBLE STRIP DETAILS

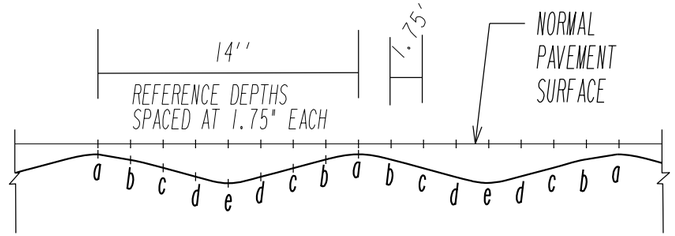

	DEPTH	
LOCATION	MIL	INCHES
a	62.5	1/16''
b	156	5/32''
c	281	9/32''
d	438	7/16''
e	500	1/2''

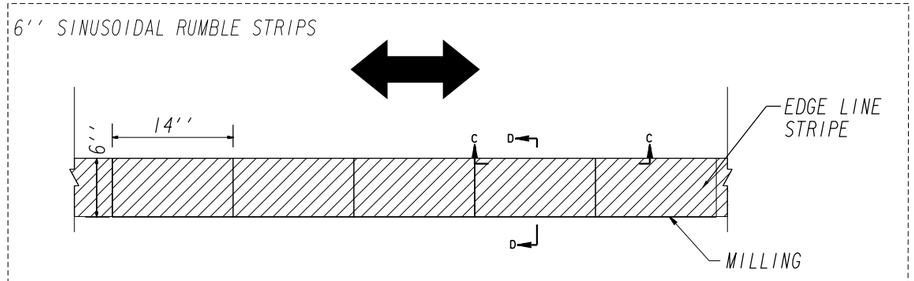

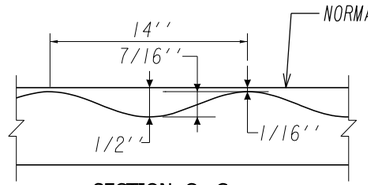

SECTION C - C

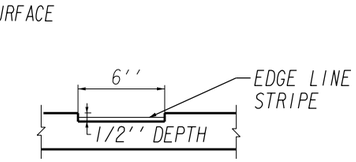

SECTION D - D
(TROUGH OF SINUSOIDAL WAVE)

TYPICAL SECTION

(INSIDE < 2' PAVED SHOULDER EDGE LINE RUMBLE STRIPS)

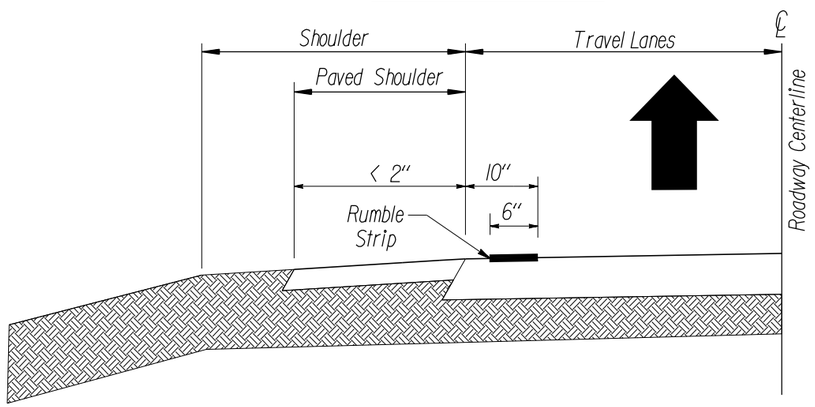

TYPICAL SECTION

(OUTSIDE < 5' PAVED SHOULDER EDGE LINE RUMBLE STRIPS)

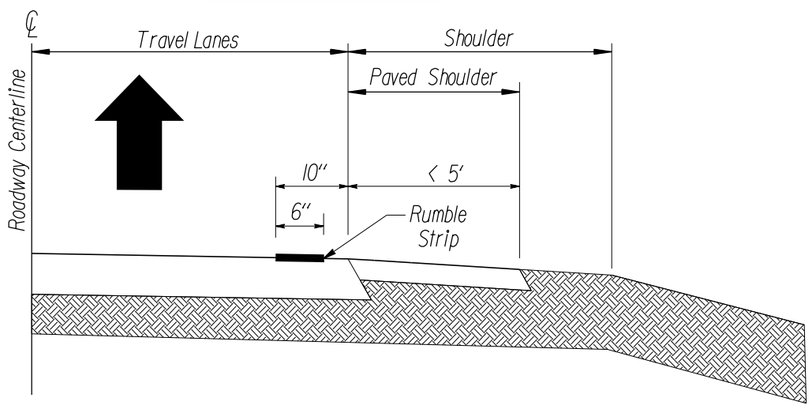

DEPARTMENT OF TRANSPORTATION
STATE OF GEORGIA

CONSTRUCTION DETAIL
EDGE LINE RUMBLE STRIP: NON-FREEWAY DETAILS

DATE | REVISION | BY

JULY 2024
NOT TO SCALE

NUMBER T-36

GDOT Georgia Department of Transportation | P.I. No. XXXXXXX

AUDIBLE PROFILED THERMOPLASTIC DETAILS

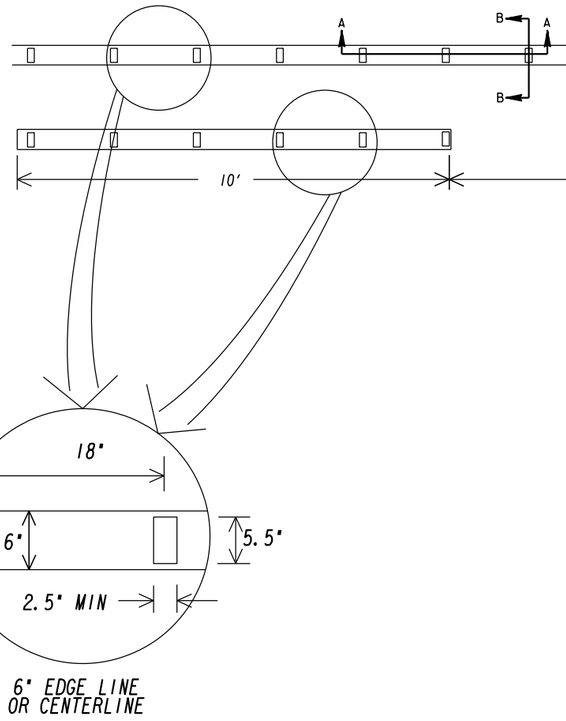

6" EDGE LINE
OR CENTERLINE

WHEN AUDIBLE PROFILED THERMOPLASTIC IS USED IN LIEU OF EDGELINE RUMBLE STRIPS ON OUTSIDE SHOULDERS 2 FT AND WIDER, THE AUDIBLE PROFILED THERMOPLASTIC SHOULD FOLLOW A PATTERN OF 30' AUDIBLE SECTION FOLLOWED BY A 10' GAP IN THE RAISED PROFILE.

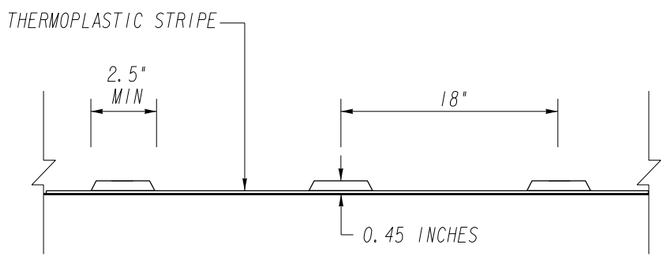

SECTION A - A

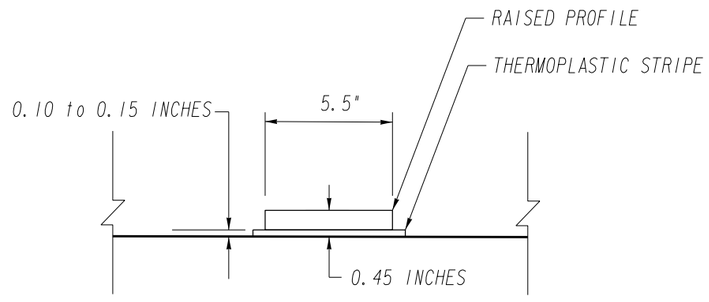

SECTION B - B

GENERAL NOTE:

1. AUDIBLE PROFILED THERMOPLASTIC PLACEMENT ON CENTERLINES OR EDGELINES SHALL FOLLOW THE SAME LONGITUDINAL PLACEMENT AS SHOWN ON DETAILS T-33 OR T-35 RESPECTIVELY, EXCEPT AUDIBLE PROFILES SHALL NOT BE PLACED WHERE THERE IS A TYPICAL GAP IN MARKING (E.G. TWO-WAY LEFT TURN LANE OR CENTERLINE SKIP STRIPING).

2. AUDIBLE PROFILED THERMOPLASTIC SHALL BE USED ONLY WHEN DIRECTED BY THE ENGINEER, OR AS SHOWN ON THE PLANS.

DEPARTMENT OF TRANSPORTATION
STATE OF GEORGIA

CONSTRUCTION DETAIL

AUDIBLE PROFILED THERMOPLASTIC

DATE | REVISION | BY

JULY 2024
NOT TO SCALE

NUMBER T-37

GDOT Georgia Department of Transportation | P. I. No.

LEGEND - TRAFFIC SIGNALS

EXISTING

- CONTROLLER CABINET
- STRAIN POLE
- TIMBER POLE
- DOWN GUY
- MAST ARM
- STREET LIGHT
- 3 SECTION FACE
- 3 SECTION FACE W/BACKPLATE
- 4 SECTION FACE
- 4 SECTION FACE W/BACKPLATE
- 4/5 SECTION (CLUSTER/T-SHAPE) FACE
- 4/5 SECTION (CLUSTER/T-SHAPE) FACE W/BACKPLATE
- OVERHEAD SIGN
- PEDESTAL POLE
- PED SIGNAL FACE
- CURB CUT RAMP, ALL TYPE
- PULLBOX, (TYPE TO BE CALLED OUT)
- DIPOLE INDUCTANCE LOOP (SIZE TO BE CALLED OUT)
- QUADRUPOLE INDUCTANCE LOOP (SIZE TO BE CALLED OUT)
- VIRTUAL DETECTION ZONE (RADAR, VIDEO, ETC.)
- CONDUIT, ALL TYPE
- RAILROAD CONTROLLER CABINET
- SIGN POST
- MICROWAVE VEHICLE DETECTION UNIT
- WIRELESS MAGNETOMETER
- VIDEO DETECTION UNIT

PROPOSED

- CONTROLLER CABINET
- STRAIN POLE
- TIMBER POLE
- DOWN GUY
- MAST ARM
- STREET LIGHT
- 3 SECTION FACE W/BACKPLATE
- 4 SECTION FACE W/BACKPLATE
- 4/5 SECTION (CLUSTER/T-SHAPE) FACE
- OVERHEAD SIGN
- PEDESTAL POLE
- PED SIGNAL FACE
- CURB CUT RAMP, (TYPE TO BE CALLED OUT)
- PULLBOX, (TYPE TO BE CALLED OUT)
- DIPOLE INDUCTANCE LOOP (SIZE TO BE CALLED OUT)
- QUADRUPOLE INDUCTANCE LOOP (SIZE TO BE CALLED OUT)
- VIRTUAL DETECTION ZONE (RADAR, VIDEO, ETC.)
- CONDUIT, (TYPE TO BE CALLED OUT)
- CONDUIT, DIRECTIONAL BORE
- RAILROAD CONTROLLER CABINET
- SIGN POST
- MICROWAVE VEHICLE DETECTION UNIT
- WIRELESS MAGNETOMETER
- VIDEO DETECTION UNIT

RELOCATED

- 3 SECTION FACE W/BACKPLATE
- 4 SECTION FACE W/BACKPLATE
- PEDESTAL POLE
- PED SIGNAL FACE

AGENCY SPECIFIC

- PROPERTY LINE
- EXIST. R/W — EXISTING R/W LINE
- REQ'D R/W — REQUIRED R/W LINE
- C — CONSTRUCTION CUT LIMIT
- F — CONSTRUCTION FILL LIMIT
- EASEMENT FOR CONTRUCTION & MAINTENANCE OF SLOPES
- EASEMENT FOR CONSTR OF SLOPES
- EASEMENT FOR CONSTR OF DRIVES
- BLA — BEGIN LIMIT OF ACCESS
- ELA — END LIMIT OF ACCESS
- REQ'D LIMIT OF ACCESS
- REQ'D LIMIT OF ACCESS & R/W
- ORANGE BARRIER FENCE
- ESA - ENV. SENSITIVE AREA (SEE ERIT TABLE)

DEPARTMENT OF TRANSPORTATION
STATE OF GEORGIA

CONSTRUCTION DETAIL

TRAFFIC SIGNALS - LEGEND

DATE | REVISION | BY

NOVEMBER 2020
NO SCALE

NUMBER TS-00

GDOT Georgia Department of Transportation | P. I. No.

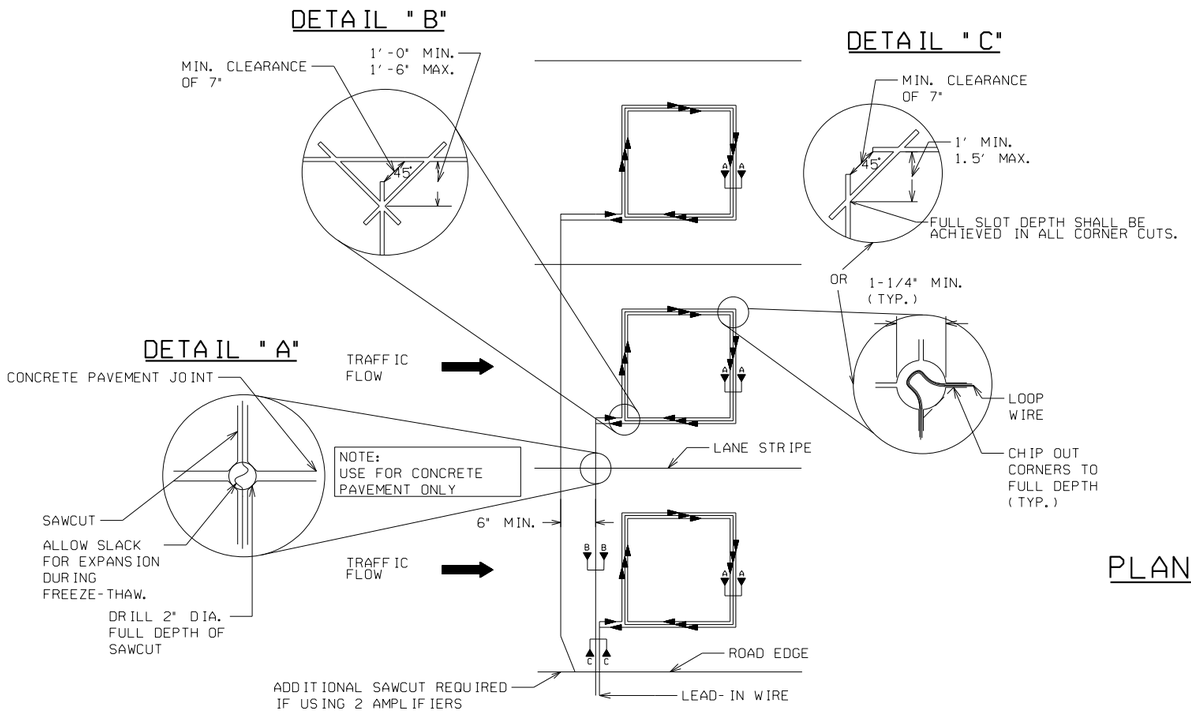

PLAN VIEW OF STANDARD LOOP SAW CUTS

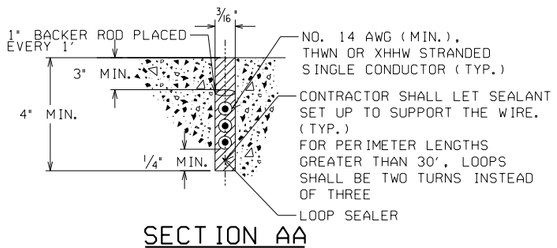

SECTION AA

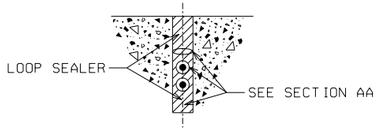

SECTION BB

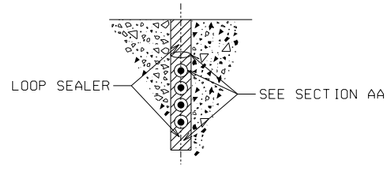

SECTION CC

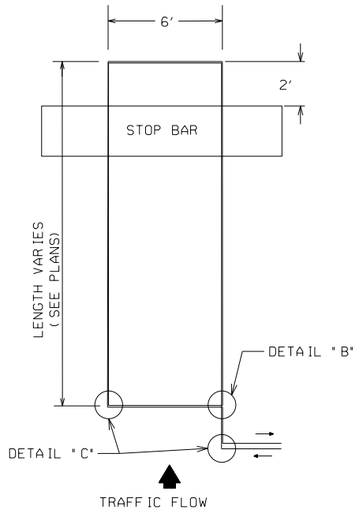

NO SCALE

PLAN VIEW OF DIPOLE LOOP

LOOP WIRE CONFIGURATION

THE DOUBLE LAYER CONFIGURATION (2-2) SHOWN IS A MINIMUM DESIGN. FOR NORMAL INSTALLATIONS WHEN REQUIRED BY THE PLANS.

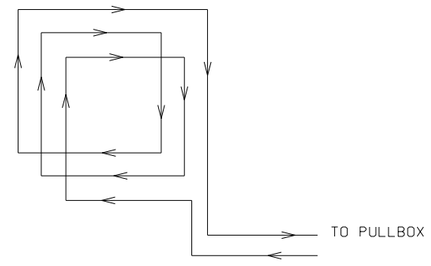

DIPOLE LOOP WIRE PLAN

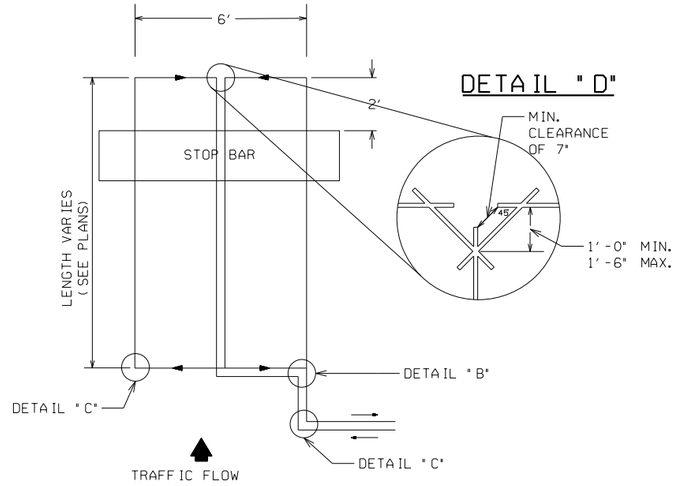

NO SCALE

PLAN VIEW OF QUADRUPOLE

LOOP WIRE CONFIGURATION

THE DOUBLE LAYER CONFIGURATION (2-4-2) SHOWN IS A MINIMUM DESIGN. FOR NORMAL INSTALLATIONS WHEN REQUIRED BY THE PLANS.

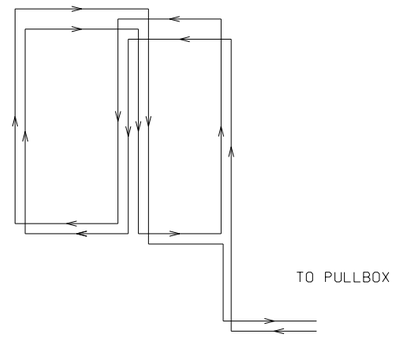

QUADRUPOLE LOOP WIRE PLAN

GENERAL NOTES:

1. INDUCTANCE LOOPS SHALL NOT BE INSTALLED IN A BRIDGE DECK. LOOPS MAY BE INSTALLED IN A BRIDGE APPROACH SLAB.
2. NO INDUCTANCE LOOP LEADS THROUGH TURNING RADIUS AT INTERSECTION.
3. INDUCTANCE LOOPS SHALL BE WOUND IN OPPOSITE DIRECTIONS IN ADJACENT LANES.
4. INDUCTANCE LOOPS SHALL NOT CROSS PAVEMENT TYPES (ASPHALT TO CONCRETE).

DEPARTMENT OF TRANSPORTATION
STATE OF GEORGIA

CONSTRUCTION DETAIL

INDUCTIVE LOOP DETECTOR INSTALLATION

DATE | REVISION | BY

NOVEMBER 2020

NO SCALE

NUMBER TS-01A

GDOT Georgia Department of Transportation | P. I. No.

TYPICAL CONDUIT ENTRANCE DETAILS
TYPE 1, 2, 3, 4S, & 5S PULLBOX

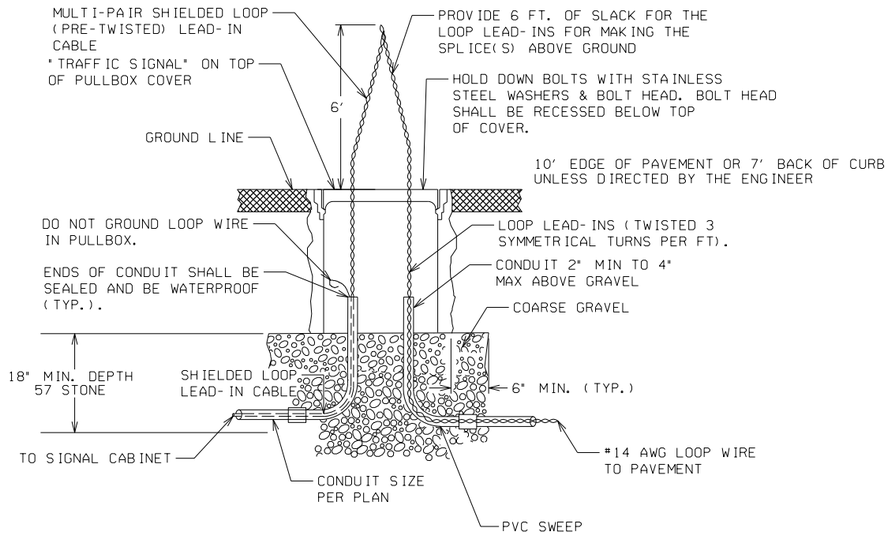

SPLICE DETAILS

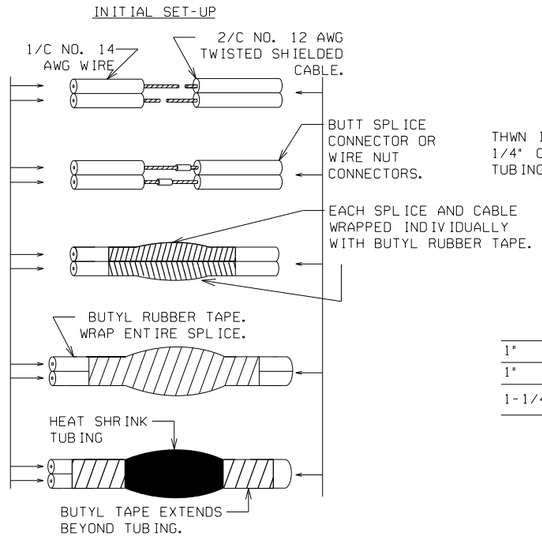

FINISHED SPLICE (PREFERRED METHOD)

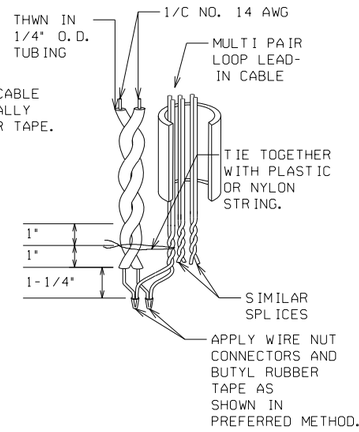

SPLICE ALTERNATE #1

NOTE:
FINISHED SPLICES MUST BE WATERPROOF

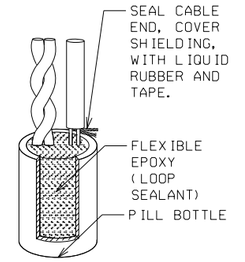

SPLICE ALTERNATE #2

EDGE OF PAVEMENT DETAILS

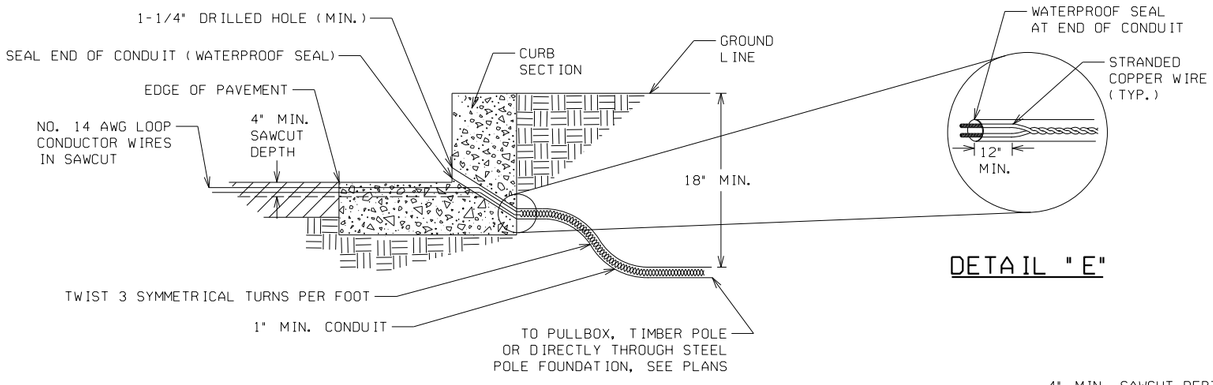

TYPICAL CURB DETAIL (WITHOUT SIDEWALK)

DETAIL "E"

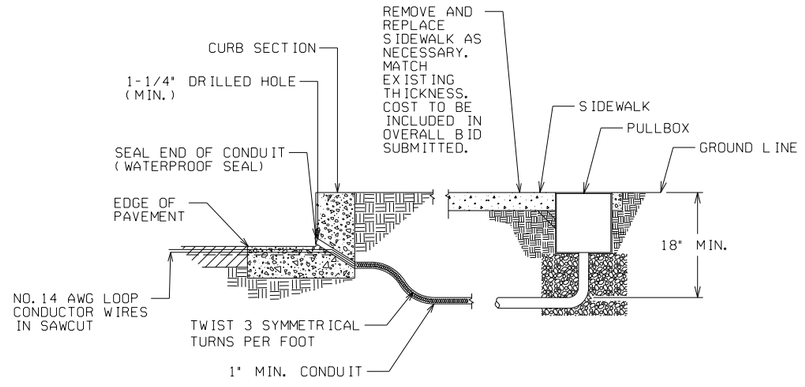

TYPICAL CURB DETAIL (WITH SIDEWALK)

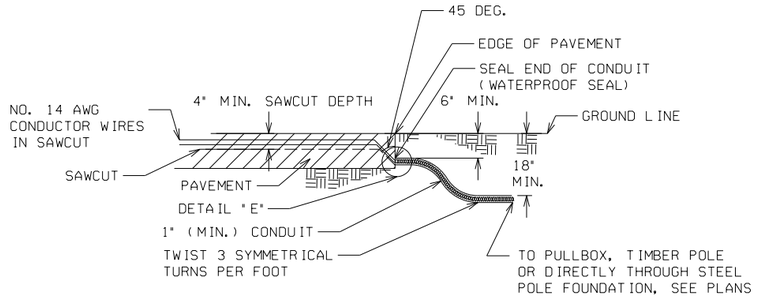

DETAIL WHERE NO CURB EXISTS

DATE	DEPARTMENT OF TRANSPORTATION STATE OF GEORGIA		
REVISION	CONSTRUCTION DETAIL INDUCTIVE LOOP DETECTOR INSTALLATION		
BY	NOVEMBER 2020 NO SCALE	NUMBER TS-01B	

GDOT Georgia Department of Transportation | P. I. No.

PREFABRICATED 332 CONTROLLER BASE

TOP

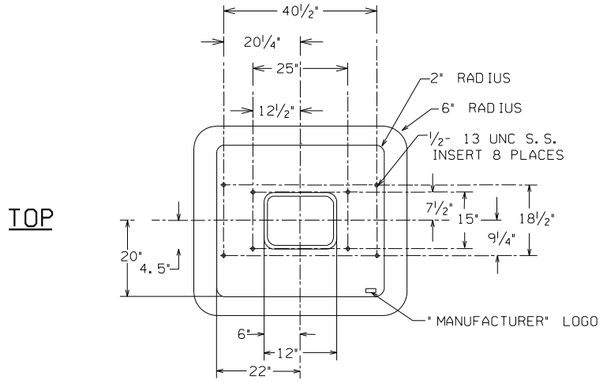

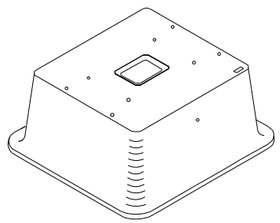

SIDE

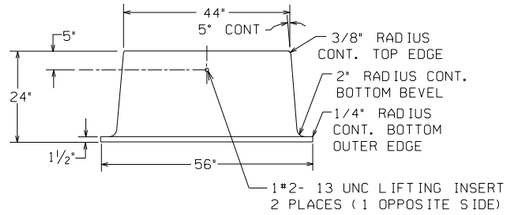

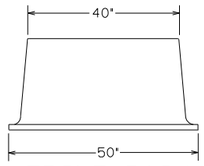

FRONT/BACK

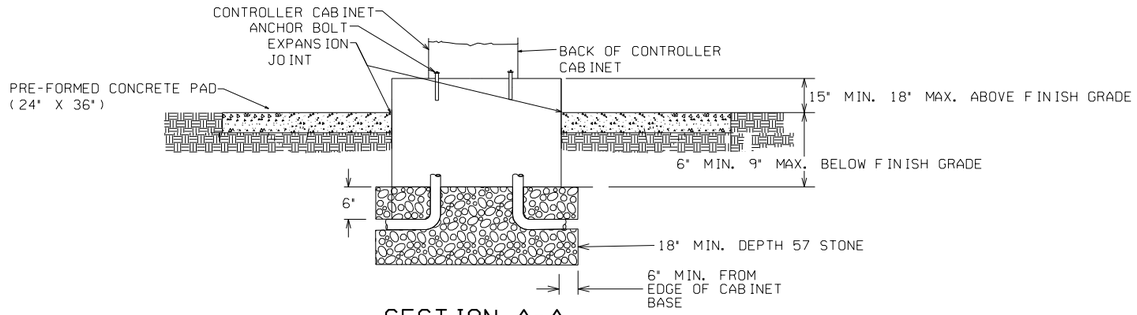

SECTION A-A

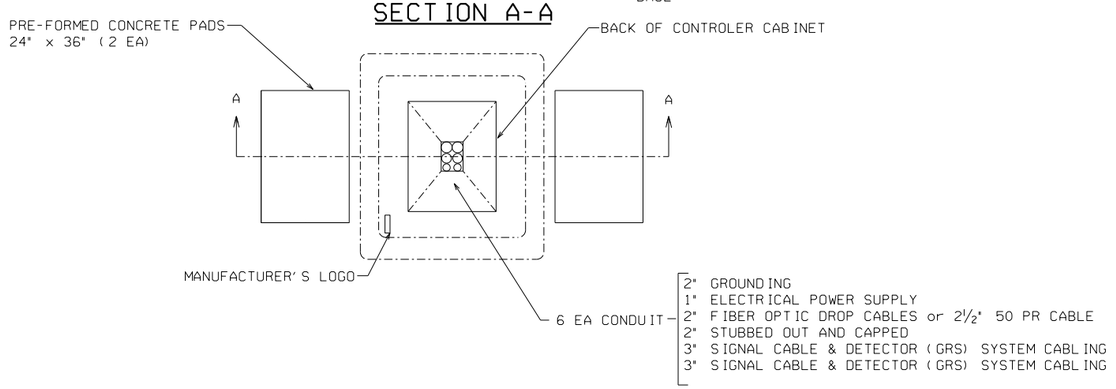

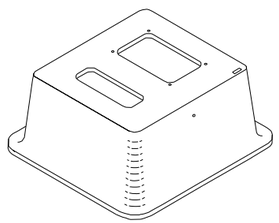

PREFABRICATED CONTROLLER BASE WITH UPS BASE MOUNT EXTENSION

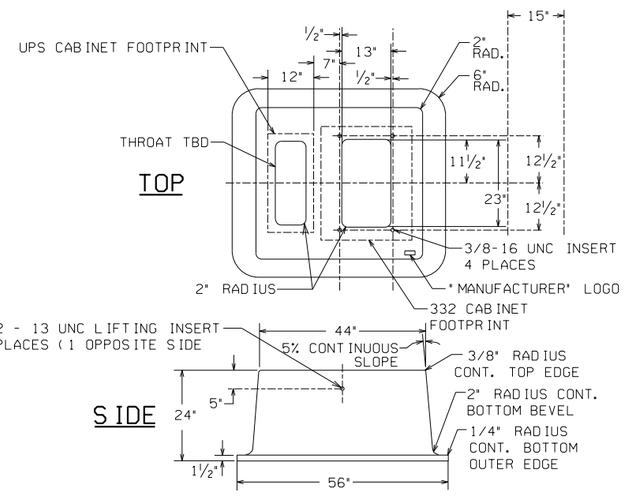

TOP

SIDE

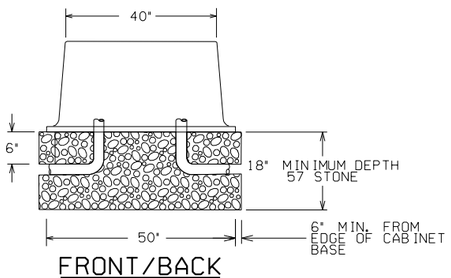

FRONT/BACK

PREFABRICATED UPS BASE MOUNT CABINET BASE

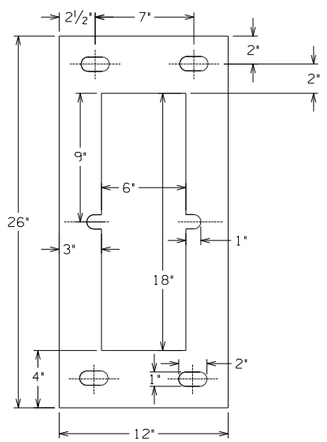

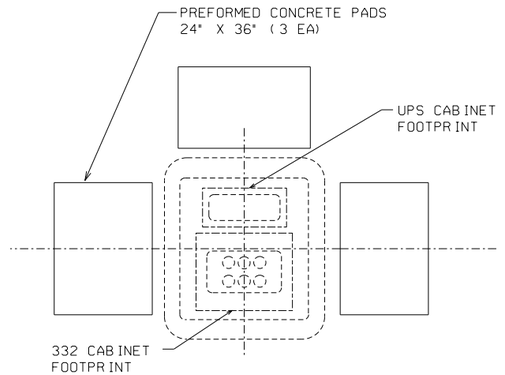

NOTE: MODEL 332 CONTROLLER CABINETS WITH UPS REQUIRES THREE PADS

DATE	DEPARTMENT OF TRANSPORTATION STATE OF GEORGIA		
REVISION	CONSTRUCTION DETAIL PREFABRICATED CABINET BASE		
BY	NOVEMBER 2020 NO SCALE	NUMBER TS-02	

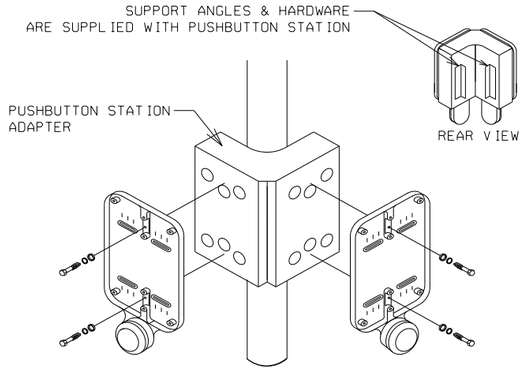

DOUBLE PUSHBUTTON STATION ADAPTER FOR 4" DIA. PEDESTRIAN PEDESTAL

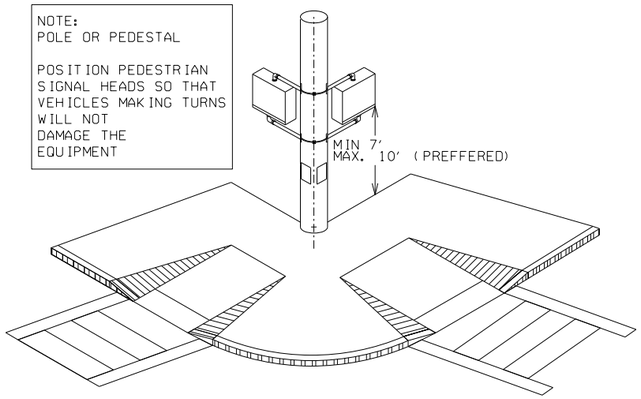

PEDESTRIAN SIGNAL HEAD ORIENTATION FOR SIDE OF POLE MOUNTING

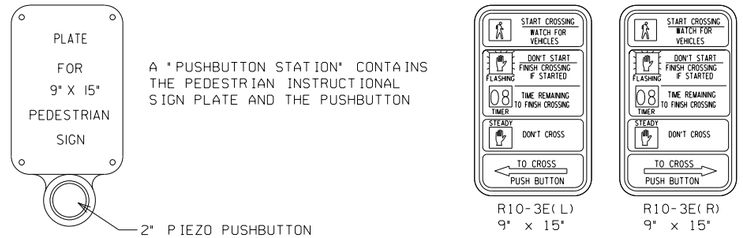

PEDESTRIAN PUSHBUTTON STATION AND SIGNS

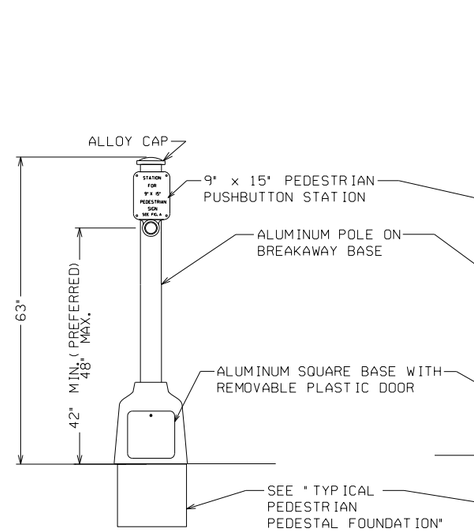

PEDESTRIAN PUSHBUTTON POST

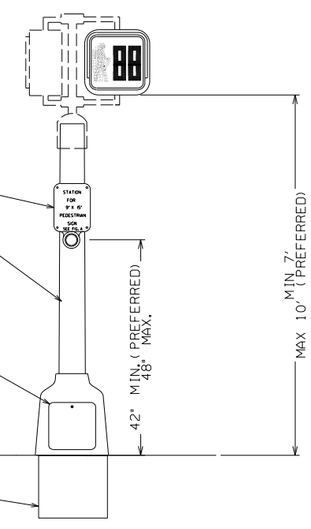

PEDESTRIAN SIGNAL PEDESTAL

NOTE:
DETAILS SHOWN ARE FOR TOP POST MOUNTING ASSEMBLY ON 10' PEDESTRIAN POLE.
A CLAMSHELL MOUNTING ASSEMBLY (NOT SHOWN) MAY BE USED AS APPROVED BY THE DEPARTMENT.
THE CLAMSHELL MOUNTING HARDWARE ASSEMBLY SHALL MEET THE SAME GDOT STANDARDS AS THE PEDESTRIAN SIGNAL HOUSING IN PAINT AND MATERIAL.

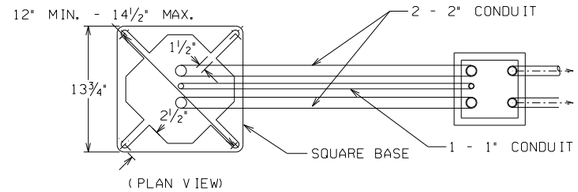

CROSS SECTION A-A

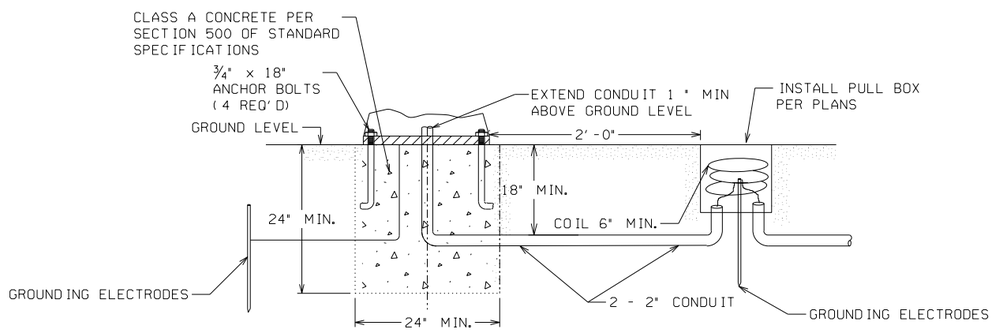

TYPICAL PEDESTRIAN PEDESTAL FOUNDATION

NOTE: SEE TS-06 FOR GROUNDING DETAILS

DEPARTMENT OF TRANSPORTATION
STATE OF GEORGIA

CONSTRUCTION DETAIL

PEDESTRIAN FACILITIES INSTALLATION

DATE | REVISION | BY

NOVEMBER 2020
NO SCALE

NUMBER
TS-03

GDOT Georgia Department of Transportation | P. I. No.

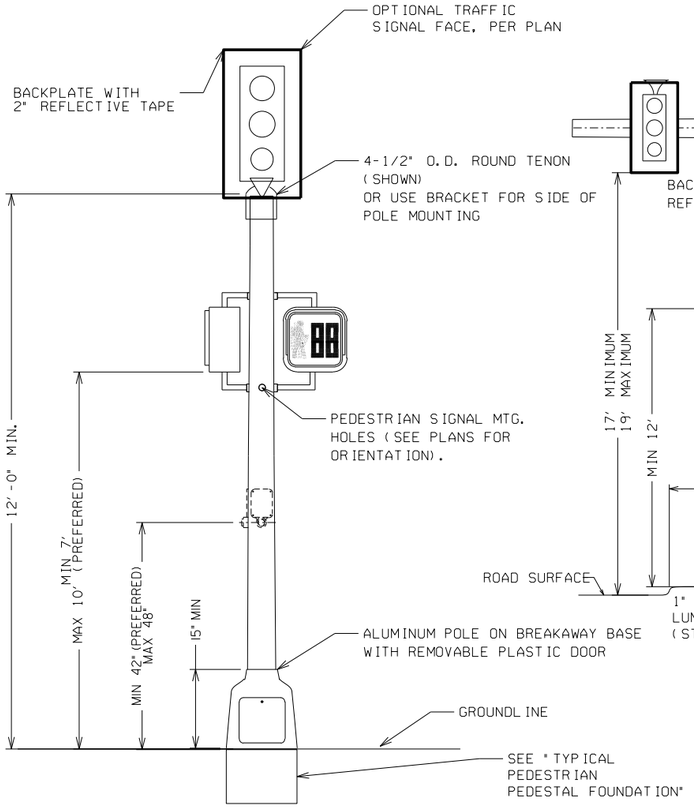

PEDESTAL POLE MOUNTED SIGNAL HEAD

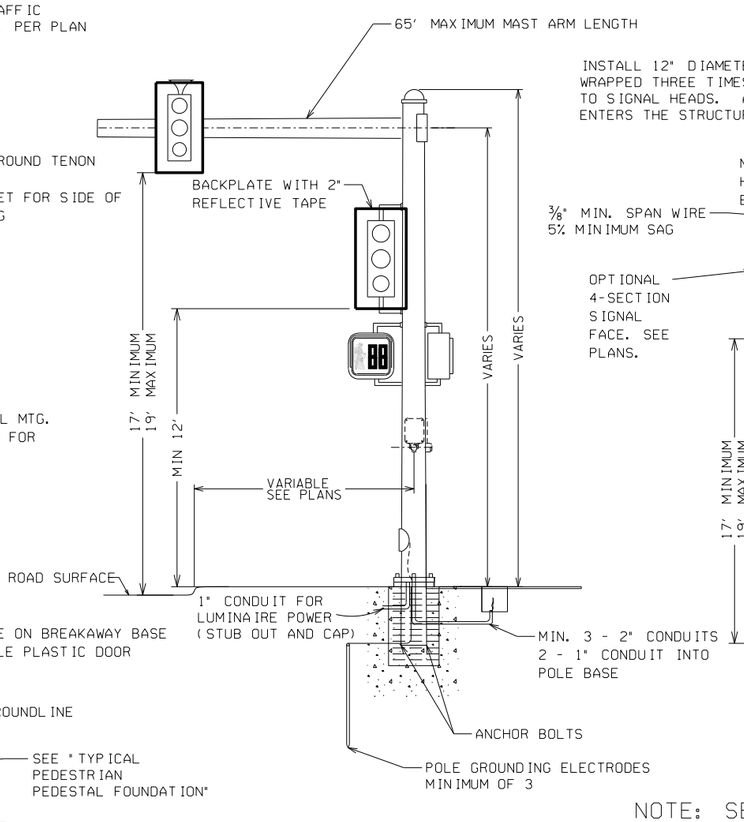

TYPICAL MAST ARM POLE DETAIL

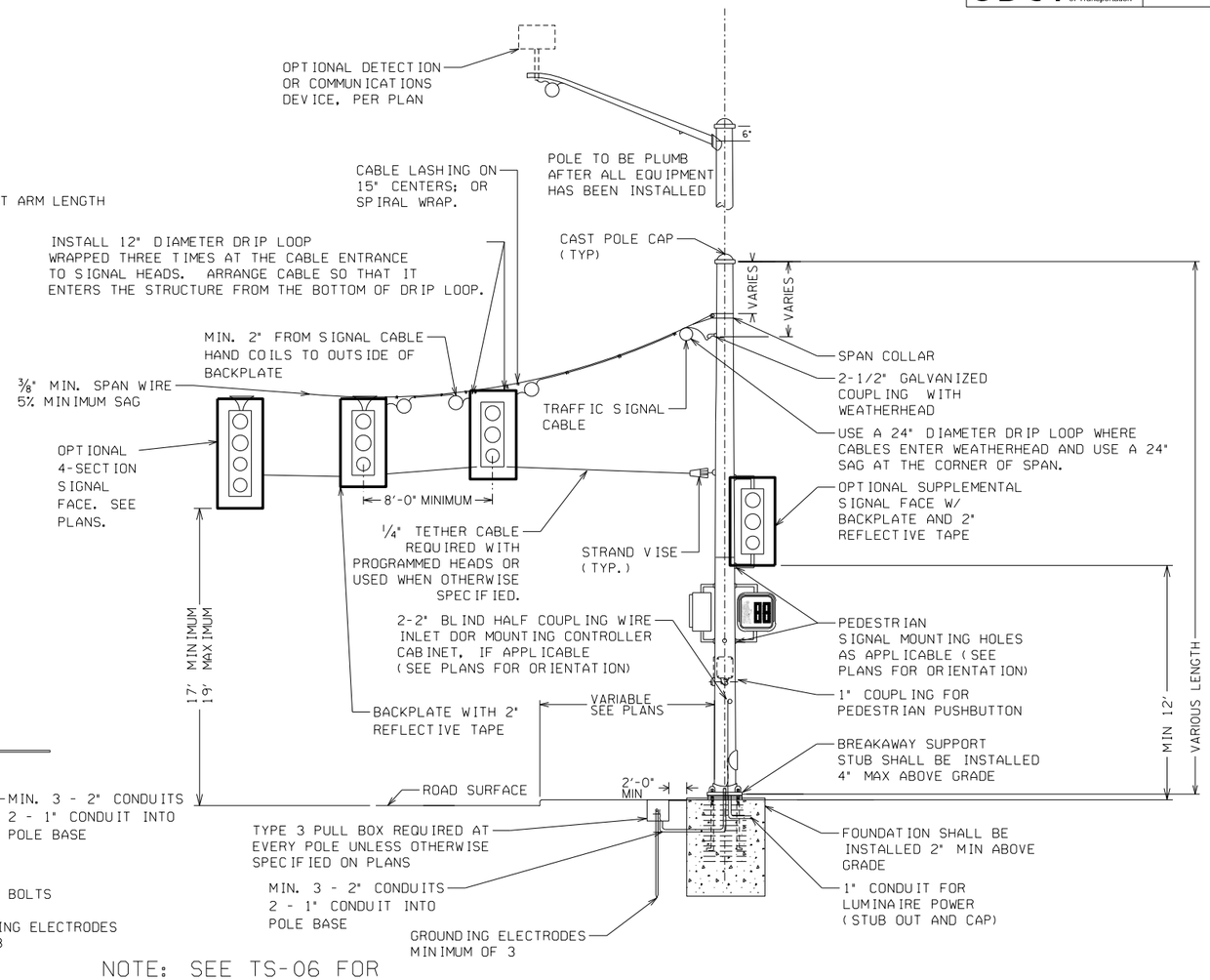

TYPICAL STEEL STRAIN POLE DETAIL

NOTE: SEE TS-06 FOR GROUNDING DETAILS

NOTES:
1. FOUNDATION SIZE AND REINFORCING SHALL BE DETERMINED FROM THE "STRAIN POLE AND MAST ARM FOUNDATIONS" SHEET WITH THE USE OF THE BENDING MOMENT AT YIELD PROVIDED BY POLE MAUFACTURER.
2. ALL HOLES IN MAST ARMS MUST BE FABRICATED BY THE MANUFACTURER. SEE SECTION 925 OF STANDARD SPECIFICATIONS REGARDING RIGID MOUNTING HARDWARE FOR SIGNAL HEADS.
3. IN ORDER TO MEET CLEAR ZONE REQUIREMENTS, FIXED OBJECTS SHALL BE PLACED WITH APPROPRIATE OFFSET AS DEFINED IN THE GDOT DESIGN POLICY MANUAL OR AASHTO'S "ROADSIDE DESIGN GUIDE", OR BE PROTECTED BY GUARDRAIL. FOR GUARDRAIL APPLICATIONS, PROVIDE A MINIMUM SPACING OF 6 FEET BETWEEN THE FACE OF THE GUARDRAIL AND THE FACE OF ALL OBJECTS BEHIND THE GUARDRAIL.
4. HELPER CABLE IS REQUIRED ON ALL SPAN LENGTHS EXCEEDING 150 FEET.

5A. SPAN WIRE USED WITH STRAIN POLE INSTALLATION SHALL HAVE A MINIMUM 5% SAG.

5B. SPAN WIRE USED WITH TIMBER POLE INSTALLATION SHALL HAVE A MINIMUM 2.5% SAG.

VERTICAL DROP (FT) BETWEEN POLE ATTACHMENT AND LOW POINT IN SPAN = DESIRED SAG x SPAN LENGTH

SPAN LENGTH = LONGEST DISTANCE BETWEEN ANY TWO SUPPORT POLES IN INSTALLATION.

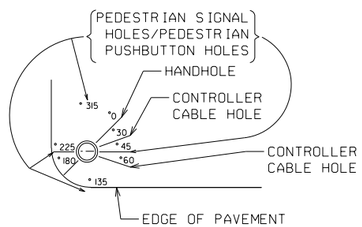

TOP VIEW FOR INLET HOLES ORIENTATION

DEPARTMENT OF TRANSPORTATION
STATE OF GEORGIA

CONSTRUCTION DETAIL
TRAFFIC SIGNAL SUPPORT STRUCTURES

DATE | REVISION | BY

NOVEMBER 2020
NO SCALE

NUMBER TS-04A

GDOT Georgia Department of Transportation | P. I. No.

NOTE:
CONCRETE STRAIN POLE FOOTING WILL INCLUDE THE SAME FOOTING DESIGN AS A SIMILAR DESIGN STEEL POLE. THE STEEL REINFORCEMENT FROM *STRAIN POLE AND MAST ARM FOUNDATIONS* (TS-05) WILL BE INSTALLED AROUND THE CONCRETE STRAIN POLE. BACKFILL THE POLE AS DESCRIBED IN THE "CAISSON DETAIL" UP TO THE LEVEL OF THE CONDUIT ENTRANCE/HAND HOLE DEPTH. ONCE THE CONDUIT AND WIRE CONNECTIONS ARE MADE INSIDE THE POLE, FINISH BACKFILLING ACCORDING TO "CAISSON DETAIL."

ALL POLES SHALL HAVE ATTACHMENT POINTS 2' (MIN.) ABOVE ACTUAL ATTACHMENT POINT FOR FUTURE USE.

NO DRILLING OF POLE WITHOUT APPROVAL FROM GDOT.

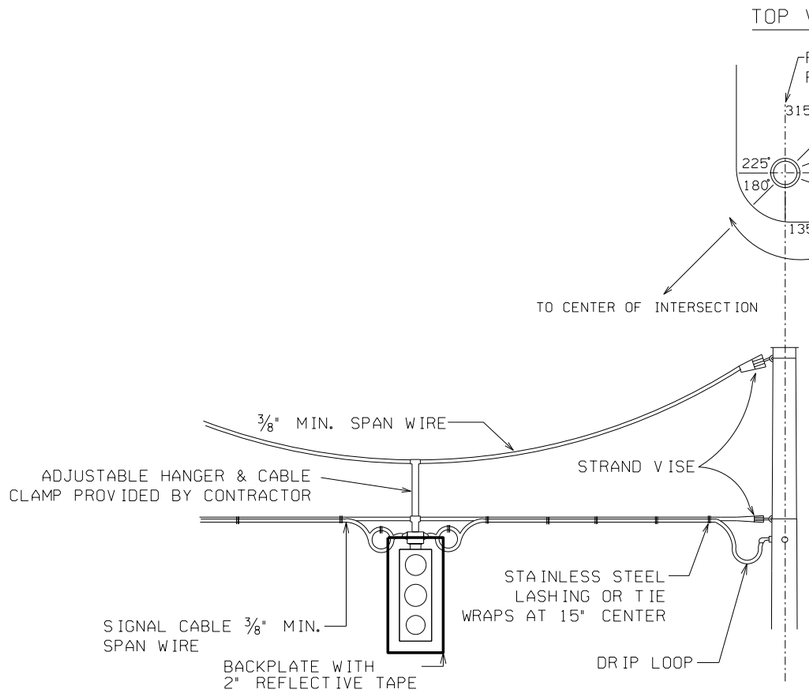

RIGID MOUNT FOR USE IN HIGH WIND AREAS (WHEN NOTED ON PLANS)

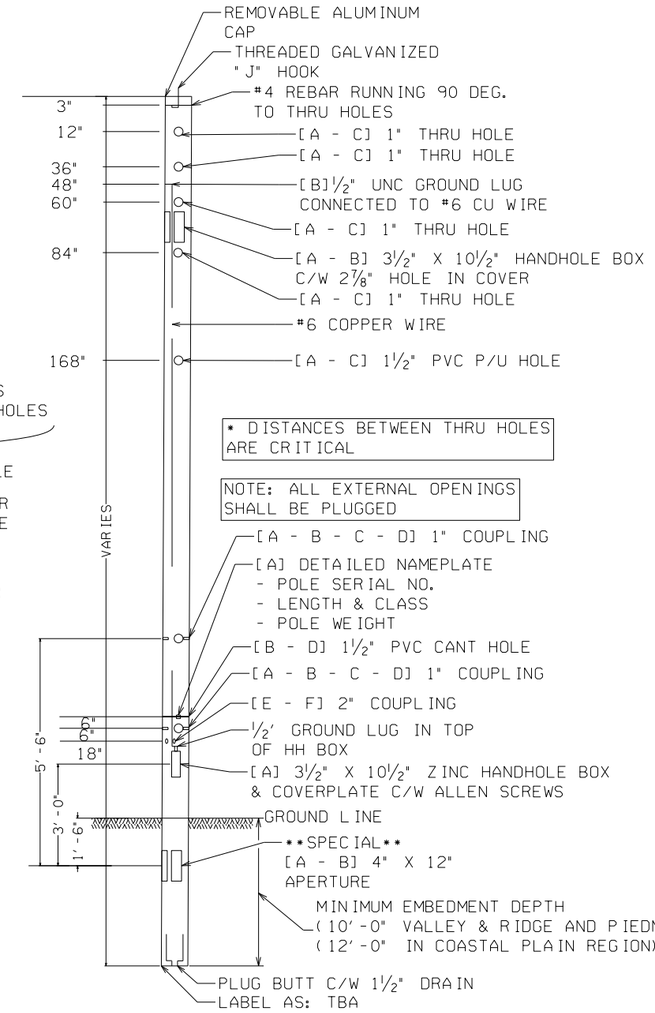

TYPICAL POLE SECTION FOR CONCRETE STRAIN POLE

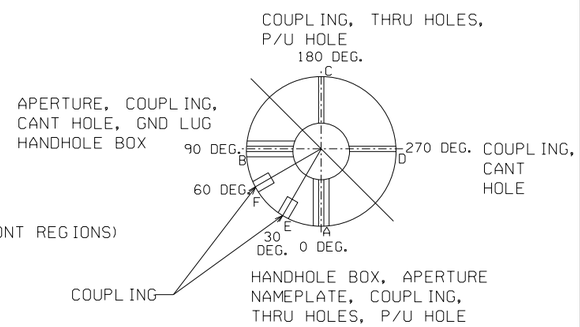

TYPICAL VIEW FROM TOP

DATE	DEPARTMENT OF TRANSPORTATION STATE OF GEORGIA	
REVISION	CONSTRUCTION DETAIL TRAFFIC SIGNAL SUPPORT STRUCTURES	
BY	NOVEMBER 2020 NO SCALE	NUMBER TS-04B

GDOT Georgia Department of Transportation | P. I. No.

PIEDMONT

γ= 120 PCF
Φ= 25 DEGREES
C= 300 PCF

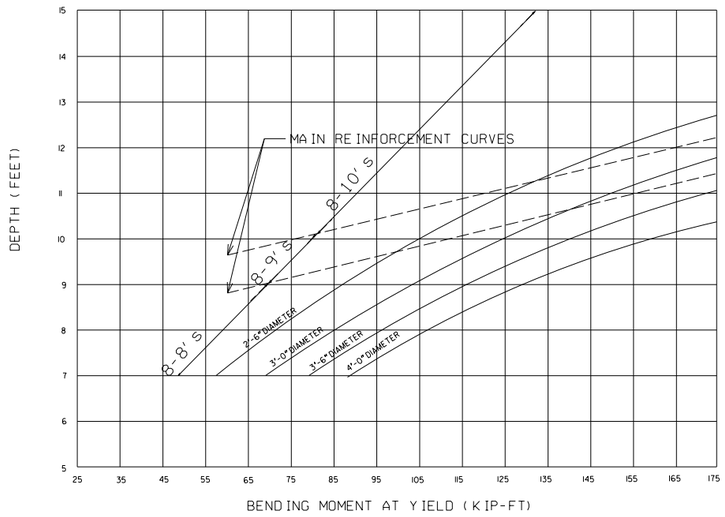

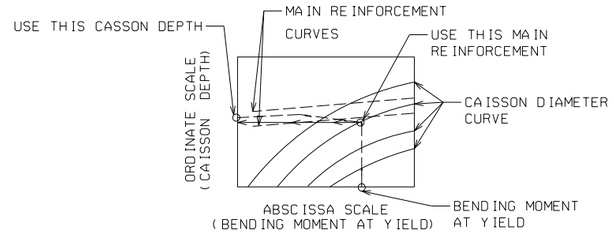

PROCEDURE TO FIND FOOTING SIZE

1. DETERMINE "BENDING MOMENT AT YIELD" FROM APPROVED SHOP DRAWINGS.
2. SELECT DIAMETER OF CAISSON.
3. READ "BENDING MOMENT AT YIELD" ON ABSCISSA SCALE, PROJECT A VERTICAL LINE UPWARD UNTIL THE DESIRED "CAISSON DIAMETER CURVE" IS INTERSECTED, TURN 90 DEGREES AND PROJECT A HORIZONTAL LINE UNTIL THE ORDINATE SCALE IS INTERSECTED.
4. READ THE REQUIRED "CAISSON DEPTH" FROM THE INTERSECTION POINT ON THE ORDINATE SCALE DEPTH SHALL BE INTERPOLATED TO THE NEAREST 3 INCH INCREMENT.
5. READ THE REQUIRED "MAIN REINFORCEMENT SIZE" FROM THE INTERSECTION POINT ON THE CAISSON DIAMETER CURVE.

VALLEY & RIDGE

γ= 115 PCF
Φ= 18 DEGREES
C= 750 PSF

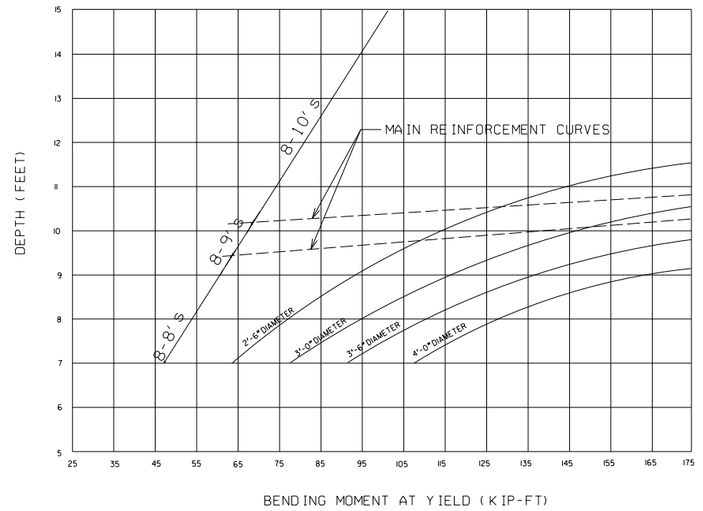

COASTAL PLAIN

γ= 120 PCF
Φ= 32 DEGREES
C= 0 PCF

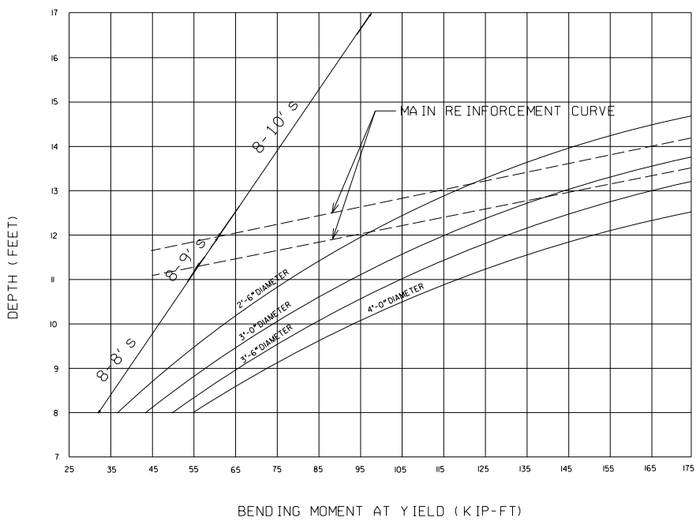

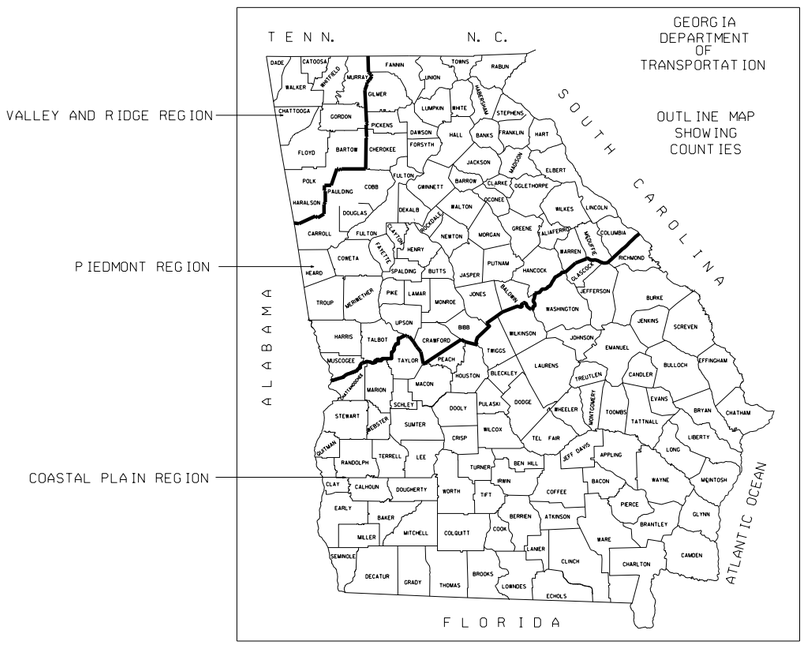

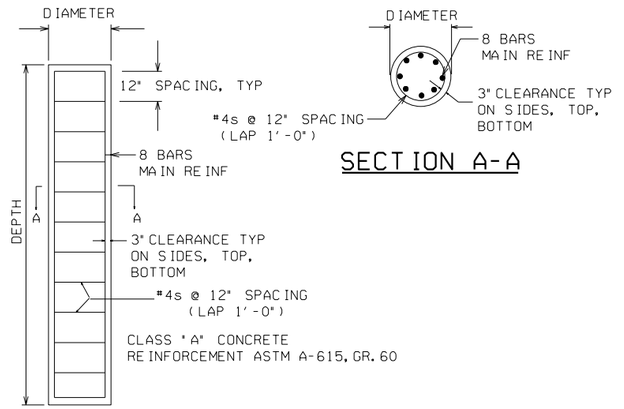

SECTION A-A

CAISSON DETAIL

NOTE:
ALL REINFORCEMENT SHALL BE PLACED AND TIED IN ACCORDANCE WITH THE STANDARD SPECS AND SPECIAL PROVISIONS. WELDING OF BAR REINFORCEMENT SHALL NOT BE PERMITTED.

DATE	REVISION	BY

DEPARTMENT OF TRANSPORTATION
STATE OF GEORGIA

CONSTRUCTION DETAIL

STRAIN POLE AND MAST ARM FOUNDATIONS

NOVEMBER 2020
NO SCALE

NUMBER
TS-05

GDOT Georgia Department of Transportation | P. I. No.

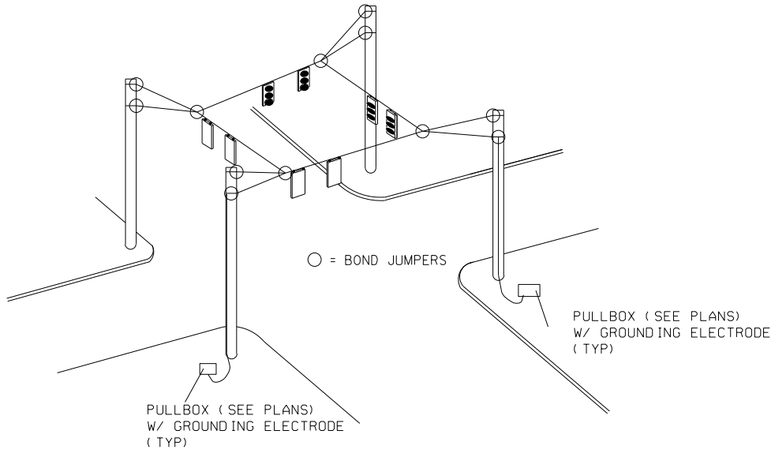

SPAN WIRE GROUNDING

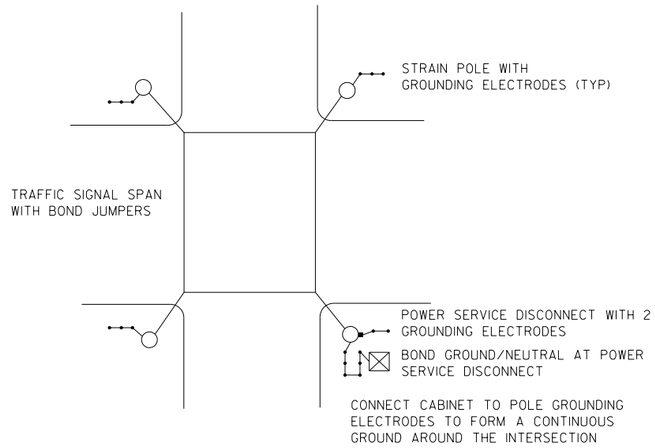

PLAN VIEW GROUNDING

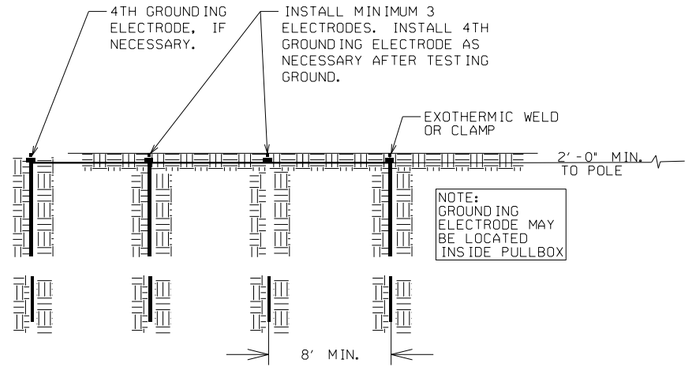

GROUNDING DETAIL A

OPTIONAL: IF DEPTH CANNOT
BE OBTAINED, INSTALL
HORIZONTAL PER SECTION 647

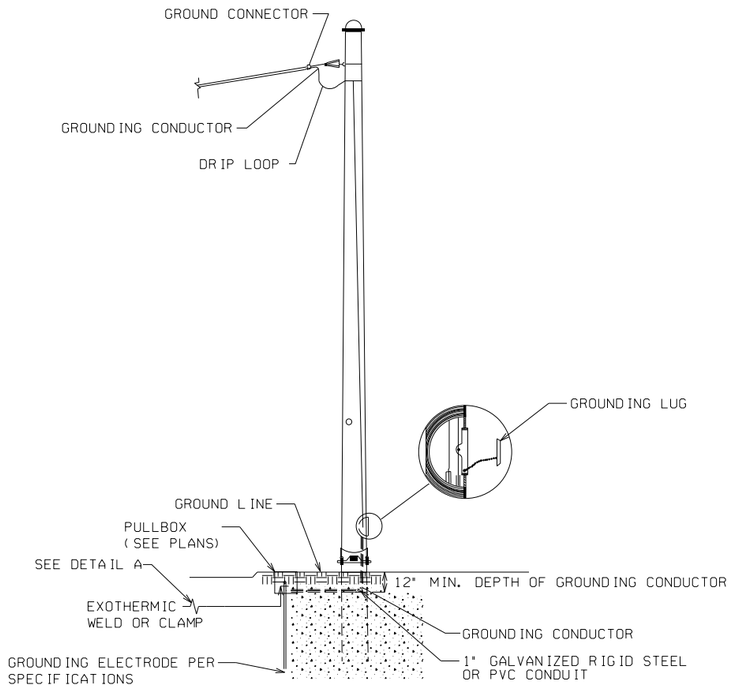

STEEL STRAIN POLE GROUNDING WITH PULLBOX OPTION

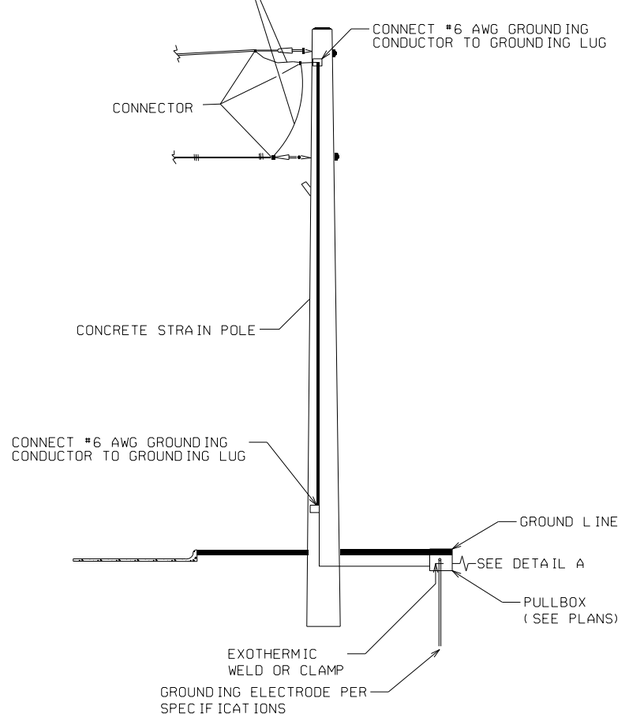

CONCRETE STRAIN POLE GROUNDING WITH PULLBOX OPTION

	DATE	DEPARTMENT OF TRANSPORTATION STATE OF GEORGIA	
	REVISION	CONSTRUCTION DETAIL GROUNDING FOR TRAFFIC SIGNAL SUPPORT STRUCTURES	
	BY	NOVEMBER 2020 NO SCALE	NUMBER TS-06

GDOT Georgia Department of Transportation | P. I. No.

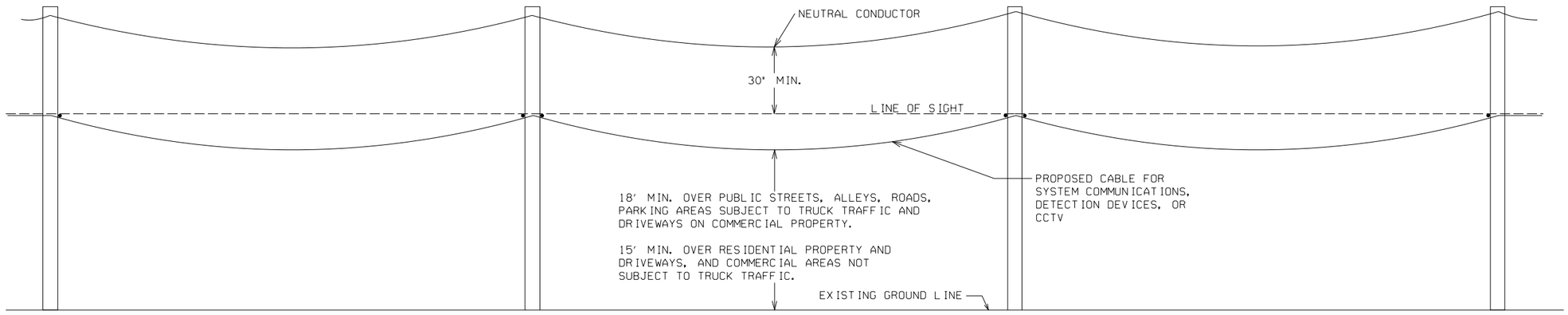

THE VERTICAL SEPARATION FROM NEUTRAL CONDUCTORS SHALL BE INCREASED SO THAT THE LOWEST POINT OF THE NEUTRAL CONDUCTOR (IN THE SPAN OR AT THE CROSSING) WILL BE AT LEAST 30 INCHES ABOVE THE CABLE ATTACHMENT LEVEL (LINE OF SIGHT) AS ILLUSTRATED ABOVE.

AERIAL CABLE SEPARATION REQUIREMENTS

DEPARTMENT OF TRANSPORTATION
STATE OF GEORGIA

CONSTRUCTION DETAIL

UTILITY CLEARANCE

DATE | REVISION | BY

NOVEMBER 2020
NO SCALE

NUMBER
TS-07

GDOT Georgia Department of Transportation | P. I. No.

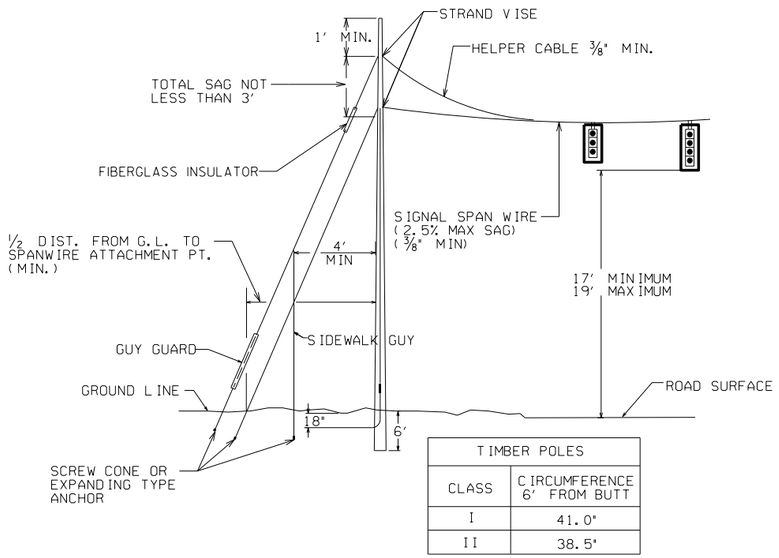

TIMBER POLES	
CLASS	CIRCUMFERENCE 6' FROM BUTT
I	41.0"
II	38.5"

TYPICAL TIMBER SIGNAL POLE DETAIL

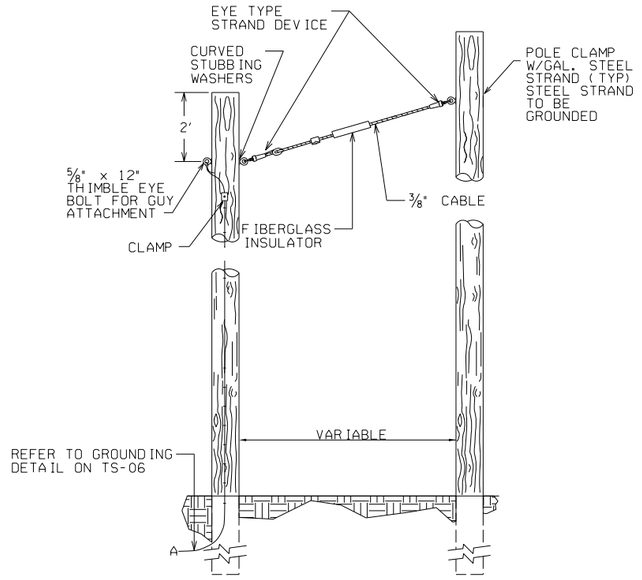

TYPICAL AERIAL GUY APPLICATION

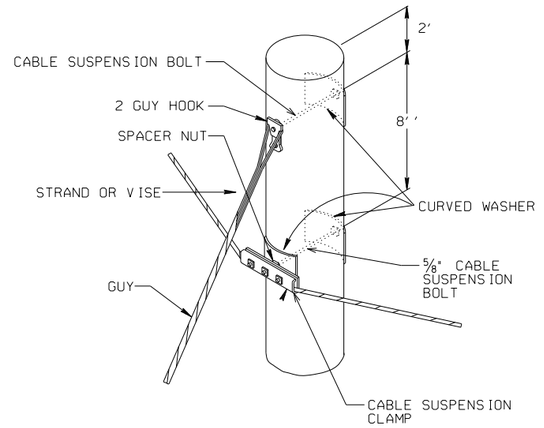

SUSPENSION STRAND - PULL TOWARD POLE - LESS THAN 5 FT.

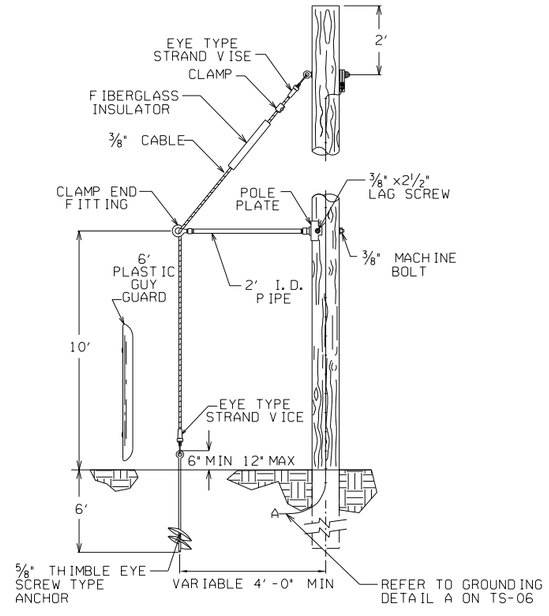

TYPICAL SIDEWALK GUY APPLICATION

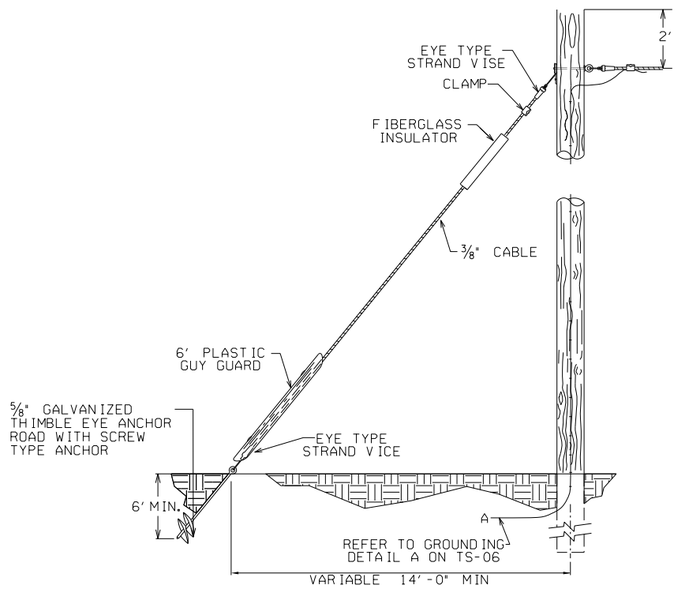

TYPICAL ANGLE GUY APPLICATION

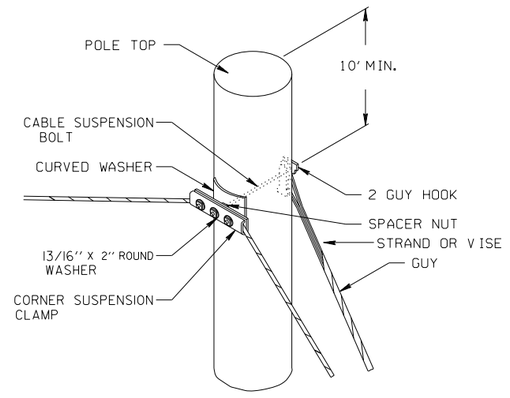

SUSPENSION STRAND - PULL AWAY FROM POLE - 5 FT. OR MORE

	DATE	DEPARTMENT OF TRANSPORTATION STATE OF GEORGIA
	REVISION	CONSTRUCTION DETAIL GUYING
	BY	NOVEMBER 2020 NO SCALE
		NUMBER TS-08

GDOT Georgia Department of Transportation | P. I. No.

FIBER OPTIC CABLE MANAGEMENT IN TYPE 4, 5, 6 & 7 PULLBOX

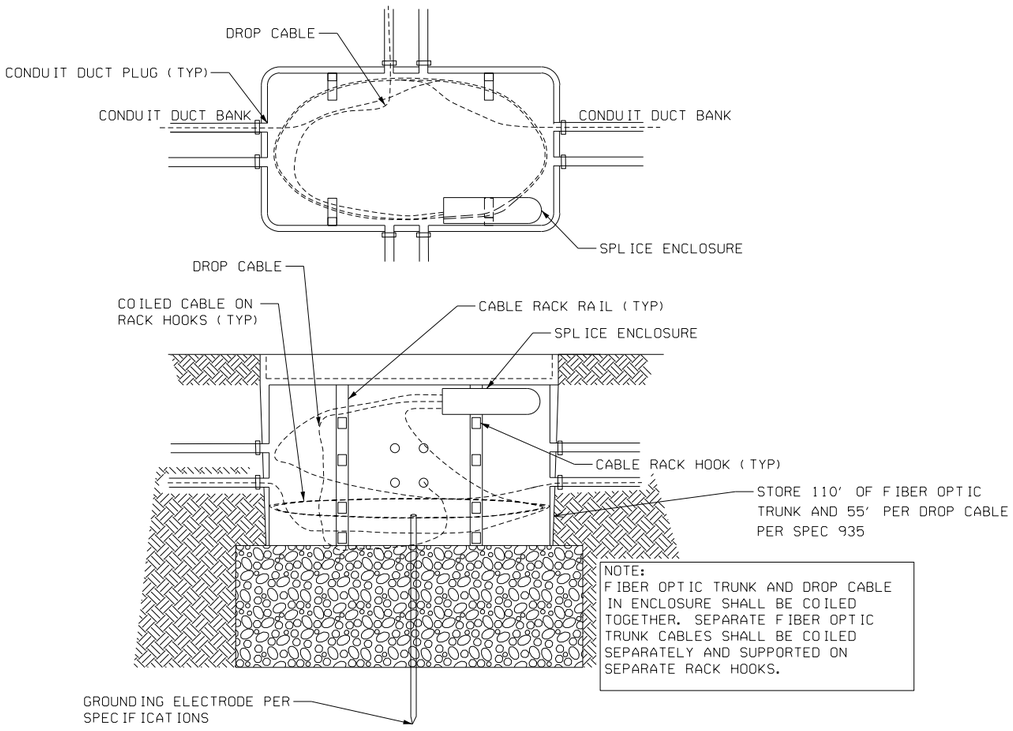

NOTE:
FIBER OPTIC TRUNK AND DROP CABLE IN ENCLOSURE SHALL BE COILED TOGETHER. SEPARATE FIBER OPTIC TRUNK CABLES SHALL BE COILED SEPARATELY AND SUPPORTED ON SEPARATE RACK HOOKS.

AERIAL DROP DETAIL

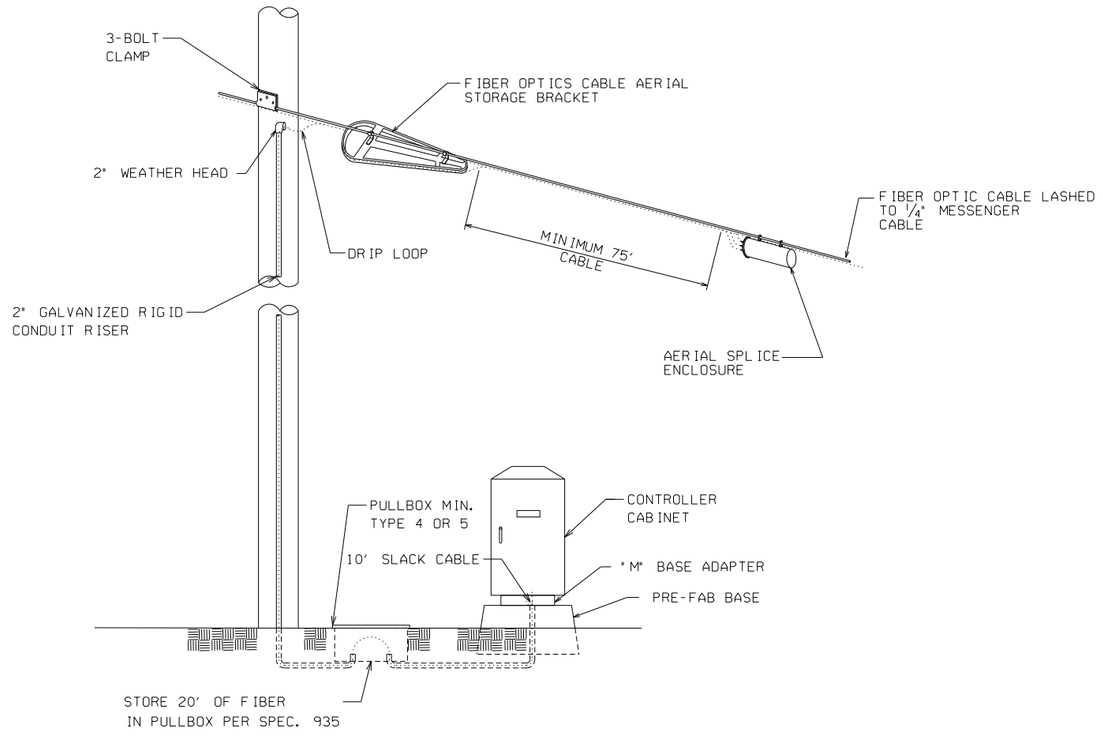

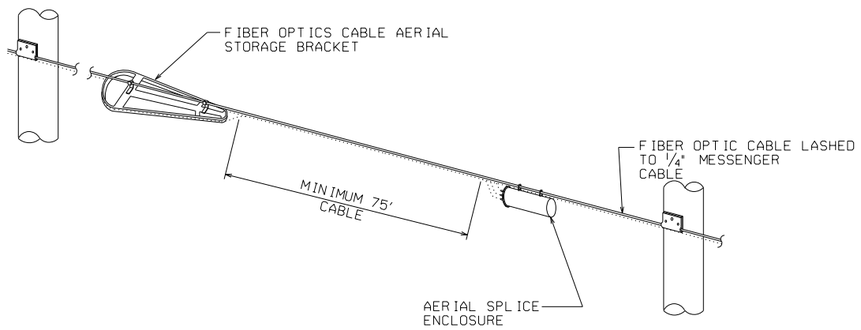

AERIAL BUTT SPLICE DETAIL



AERIAL SLACK LOOP DETAIL

						DATE	DEPARTMENT OF TRANSPORTATION STATE OF GEORGIA
					REVISION		CONSTRUCTION DETAIL FIBER OPTICS INSTALLATION
					BY	NOVEMBER 2020 NO SCALE	NUMBER TS-09

GDOT Georgia Department of Transportation | P. I. No.

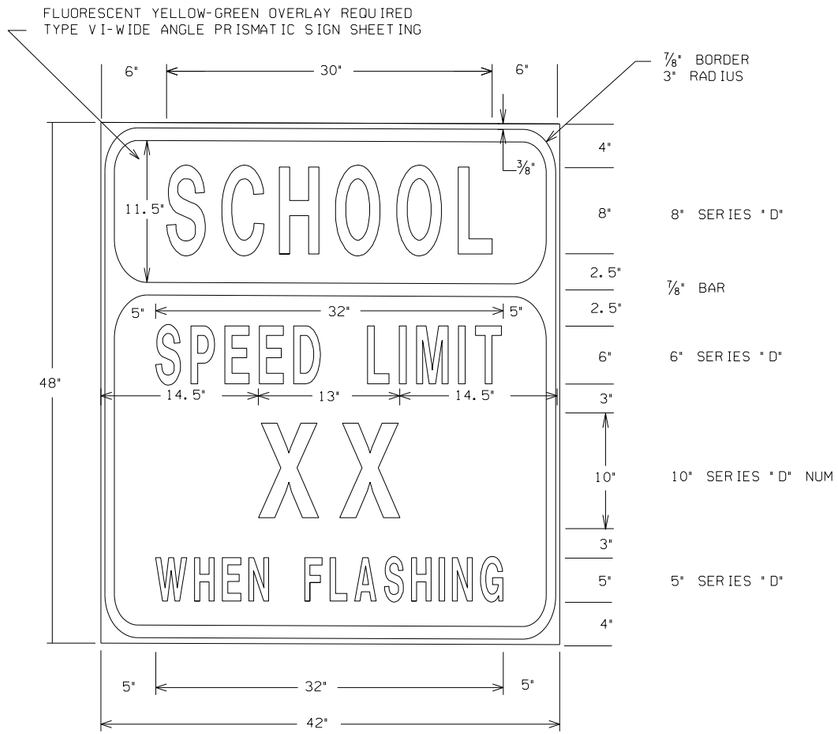

S5-1D SPECIAL
42" X 48"

WHITE REFLECTORIZED BACKGROUND WITH BLACK LEGENDS, BORDERS, AND SYMBOLS

NOTE: THE SPECIAL S5-1D (42" X 48") SCHOOL SPEED LIMIT SIGN DETAIL, SHOWN ABOVE MAY BE USED WITH POST MOUNTED INSTALLATION; SEE DETAIL FOR "FLASHING SCHOOL ASSEMBLY" WHEN SIGN IS USED FOR GROUND/POST MOUNTED INSTALLATION WITH FLASHING BEACON.

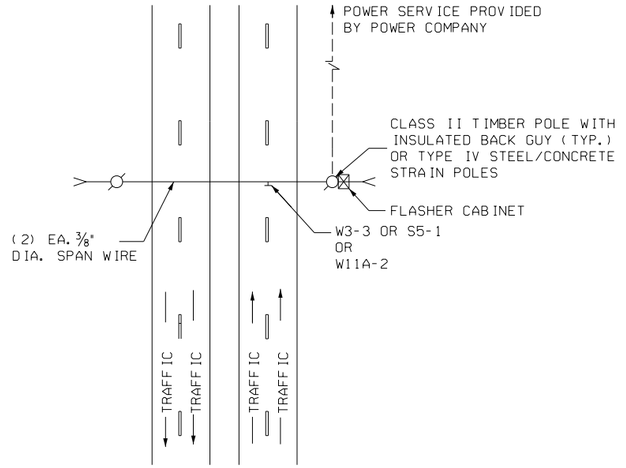

SITE LAYOUT

NOTE:
SPAN MOUNTING DETAILS APPLY TO ALL SIGN ASSEMBLIES SHOWN ON THIS SHEET

FRONT VIEW

STANDARD SIGN SUMMARY GENERAL NOTES

1. ALL STANDARD HIGHWAY SIGNS SHALL BE FABRICATED AND ERECTED IN ACCORDANCE WITH THE DETAILS SHOWN IN THE PLANS, THE MANUAL ON UNIFORM TRAFFIC CONTROL DEVICES (CURRENT EDITION) AND GEORGIA'S STANDARD SPECIFICATIONS, SUPPLEMENTAL SPECIFICATIONS, AND/OR SPECIAL PROVISIONS.
2. ALL STANDARD HIGHWAY SIGNS SHALL BE ERECTED AT A HEIGHT OF 7 FEET ABOVE THE NORMAL EDGE OF PAVEMENT TO THE BOTTOM OF THE SIGN OR ASSEMBLY.
3. IN ORDER TO MEET CLEAR ZONE REQUIREMENTS, FIXED OBJECTS SHALL BE PLACED WITH APPROPRIATE OFFSET AS DEFINED IN THE GDOT DESIGN POLICY MANUAL OR AASHTO'S "ROADSIDE DESIGN GUIDE", OR BE PROTECTED BY GUARDRAIL. FOR GUARDRAIL APPLICATIONS, PROVIDE A MINIMUM SPACING OF 6 FEET BETWEEN THE FACE OF THE GUARDRAIL AND THE FACE OF ALL OBJECTS BEHIND THE GUARDRAIL.
4. TYPE 9 REFLECTIVE SHEETING SHALL BE USED FOR ALL STANDARD HIGHWAY SIGNS REQUIRING REFLECTORIZED BACKGROUNDS OR SPECIFIED OTHERWISE IN IN THE PLANS. EITHER CLASS 1 OR CLASS 2 ADHESIVE BACKING IS PERMISSIBLE.
5. TYPE XI (VERY HIGH INTENSITY) YELLOW-GREEN FLOURESCENT BACKGROUND SHALL BE USED FOR ALL SCHOOL WARNING SIGNS. THE "SCHOOL" PORTION OF THE SCHOOL SPEED LIMIT (S5-1 OR S5-1D SPECIAL) SIGNS AND ANY SUPLLEMENTAL PLAQUES USED IN ASSOCIATION WITH THESE WARNING SIGNS SHALL USE A TYPE XI (VERY HIGH INTENSITY) FLOURESCENT YELLOW-GREEN BACKGROUND WITH BLACK LEGEND AND BORDER UNLESS OTHERWISE NOTED IN THE M.U.T.C.D.
6. REFER TO GDOT TRAFFIC SIGNAL STANDARD DETAILS AND GDOT STANDARD SPECIFICATIONS 647 AND 925.

DEPARTMENT OF TRANSPORTATION
STATE OF GEORGIA

CONSTRUCTION DETAIL

FLASHING BEACON ASSEMBLY

SPAN WIRE INSTALLATION

DATE | REVISION | BY

NOVEMBER 2020
NO SCALE

NUMBER
TS-10A

GDOT Georgia Department of Transportation | P. I. No.

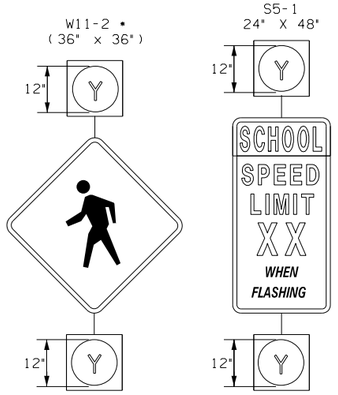

NOTE:
SIGN SIZE FOR POLE MOUNTED INSTALLATION SHALL BE BASED ON SECTION 7B.01 OF THE MUTCD. THE SCHOOL SPEED LIMIT SIGN (S5-1D SPECIAL 42" X 48") SIGN, SHOWN ON SPAN MOUNTED WARNING FLASHER INSTALLATION DETAIL, WILL BE SUBSTITUTED FOR THE S5-1.

• A FLOURESCENT YELLOW-GREEN BACKGROUND COLOR MAY BE USED FOR THIS SIGN.

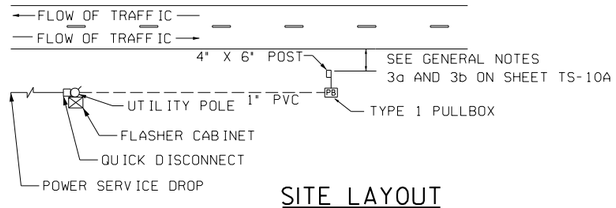

SITE LAYOUT

NOTE:
DETAILS SHOWN IS FOR WOOD POST AND ALUMINUM POLE. GALVANIZED SQUARE TUBE STEEL POST MAY BE SUBSTITUTED. REFER TO STANDARD SPECIFICATIONS SECTION 911. GALVANIZED SQUARE TUBE POSTS MAY BE USED AS APPROVED BY GDOT.

NOTE:
PULLBOX SHALL BE INSTALLED FLUSH WITH GROUND

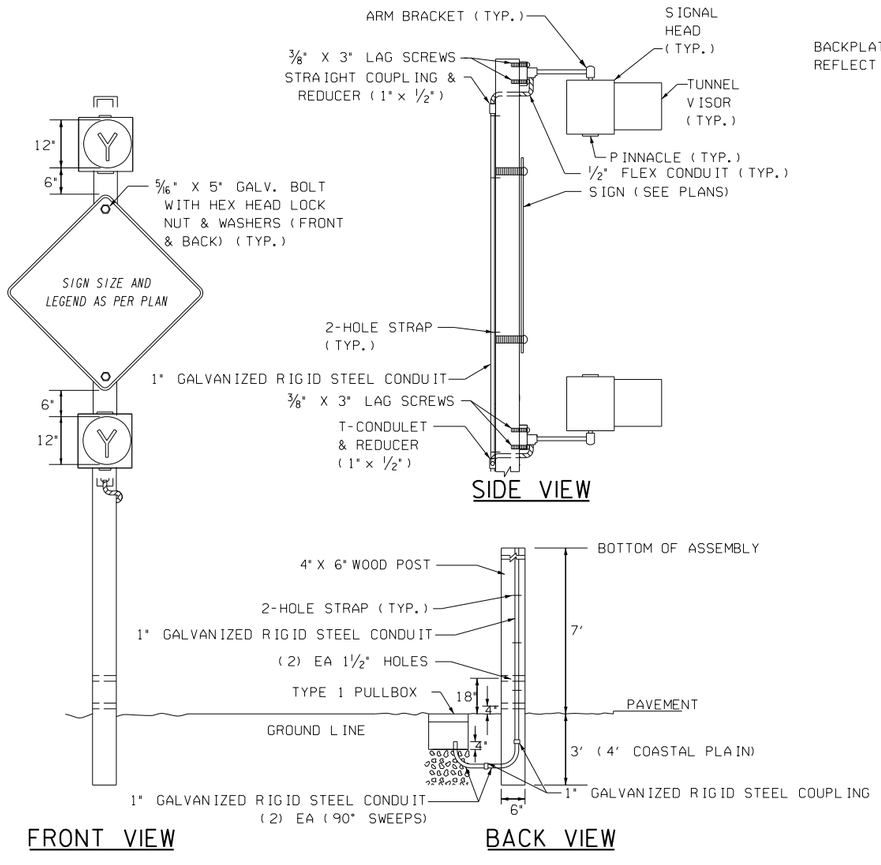

WOOD POLE MOUNTED WARNING SIGN FLASHER

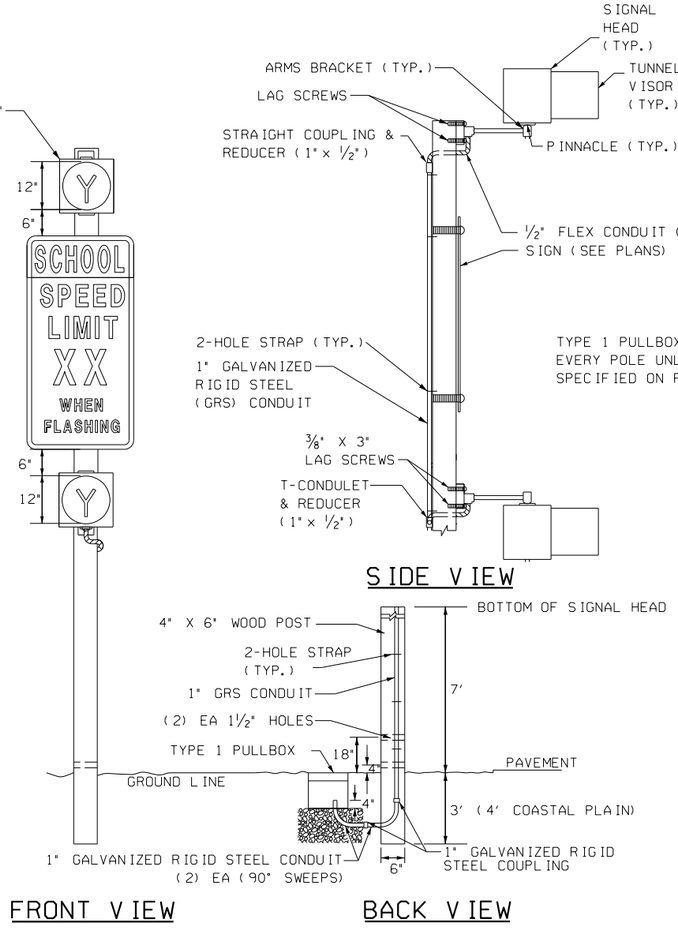

WOOD POLE MOUNTED FLASHING SCHOOL SIGNAL

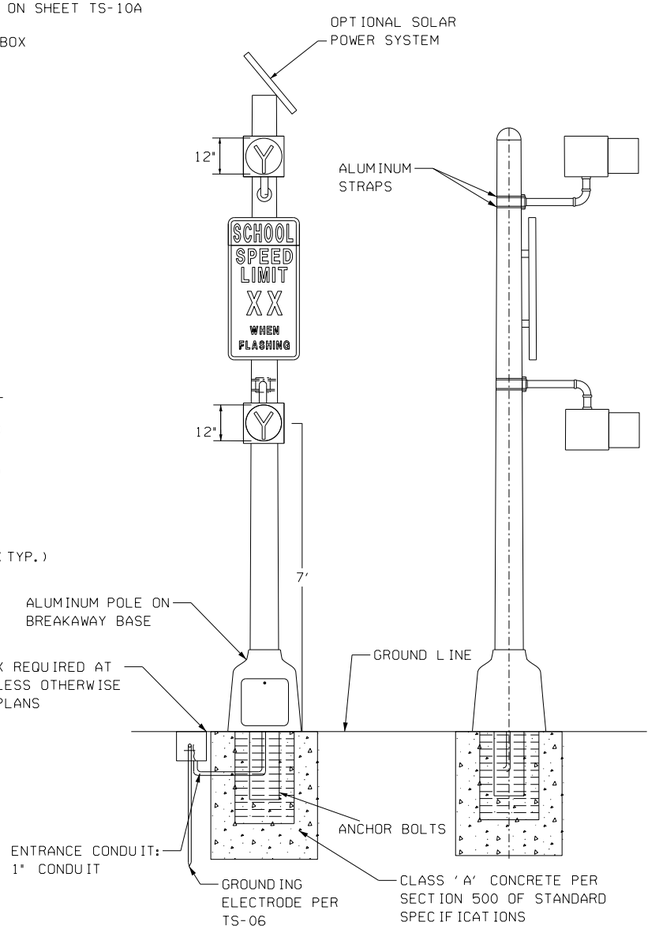

PEDESTRIAN POLE MOUNTED SCHOOL SPEED ZONE FLASHING BEACON

DATE	DEPARTMENT OF TRANSPORTATION STATE OF GEORGIA		
REVISION	CONSTRUCTION DETAIL FLASHING BEACON ASSEMBLY POST MOUNTED INSTALLATION		
BY	NOVEMBER 2020 NO SCALE	NUMBER TS-10B	

STATE	PROJECT NUMBER	SHEET NO.	TOTAL SHEETS
GA.			

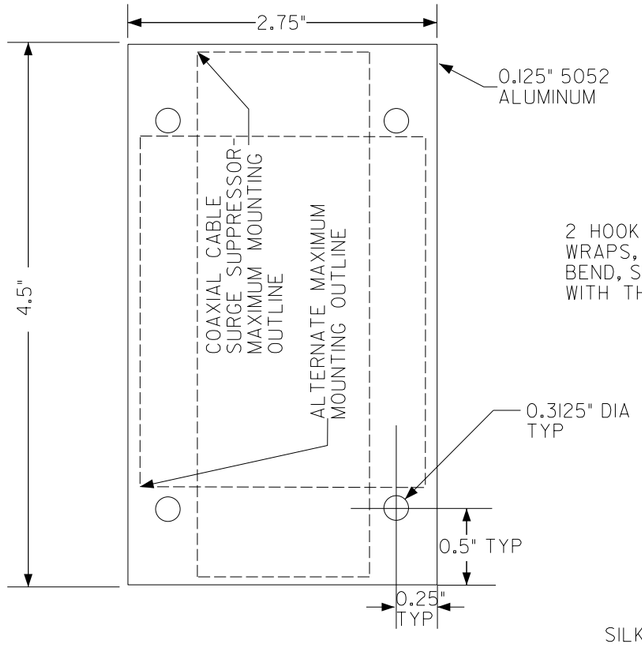

ALL DIMENSIONS +_ 0.05" TOLERANCE

COAXIAL CABLE SURGE SUPPRESSOR MOUNTING PLATE

NTS

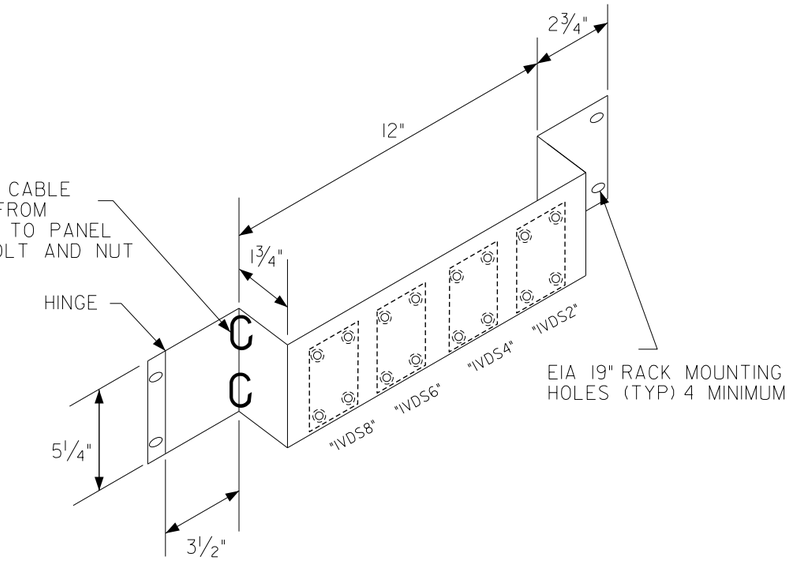

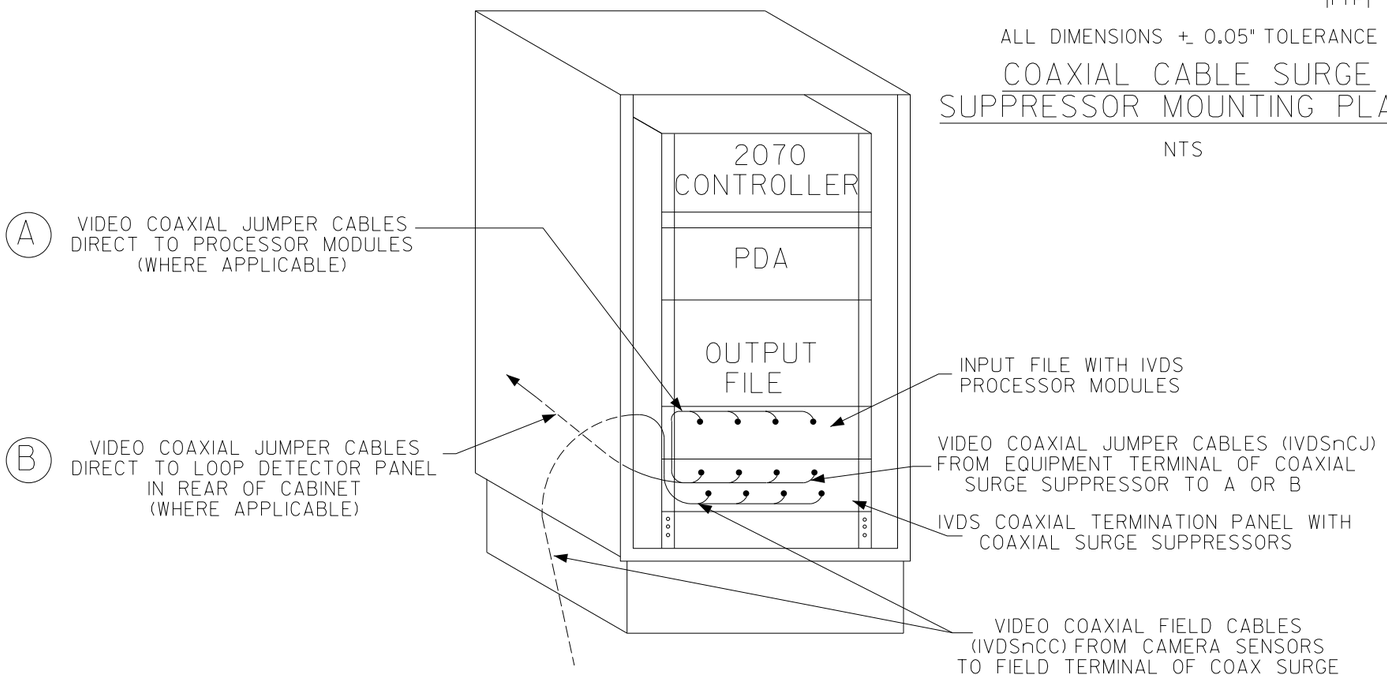

332 OR 336S CABINET-FRONT VIEW

NTS

SILKSCREEN TEXT IN QUOTES, 18 POINT FONT MINIMUM (TYP)

NOTE: FURNISH 4 MOUNTING PLATES AND 16 MOUNTING PLATE SCREWS WITH EACH PANEL

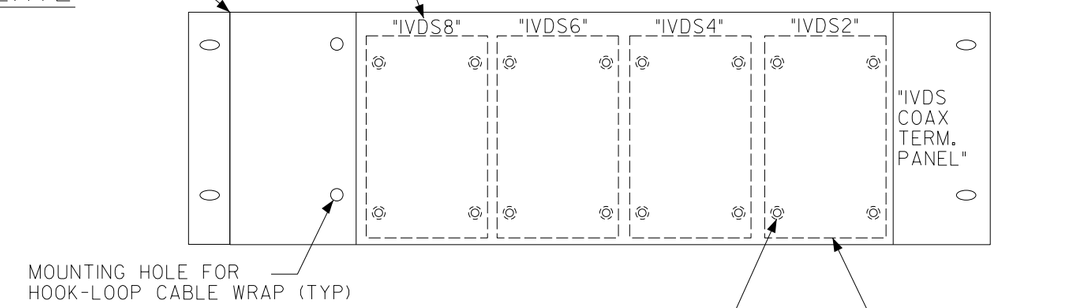

COAXIAL TERMINATION PANEL-332 OR 336S CABINET

NTS

DEPARTMENT OF TRANSPORTATION
STATE OF GEORGIA

DATE | REVISION | BY

CONSTRUCTION DETAILS

DETAILS OF
COAXIAL VIDEO CABLE
TERMINATION PANEL

NO SCALE 3-3-16

DESIGNED ____
DRAWN ____
TRACED ____
CHECKED ____

NUMBER
TS-13

STATE	PROJECT NUMBER	SHEET NO.	TOTAL SHEETS
GA.			

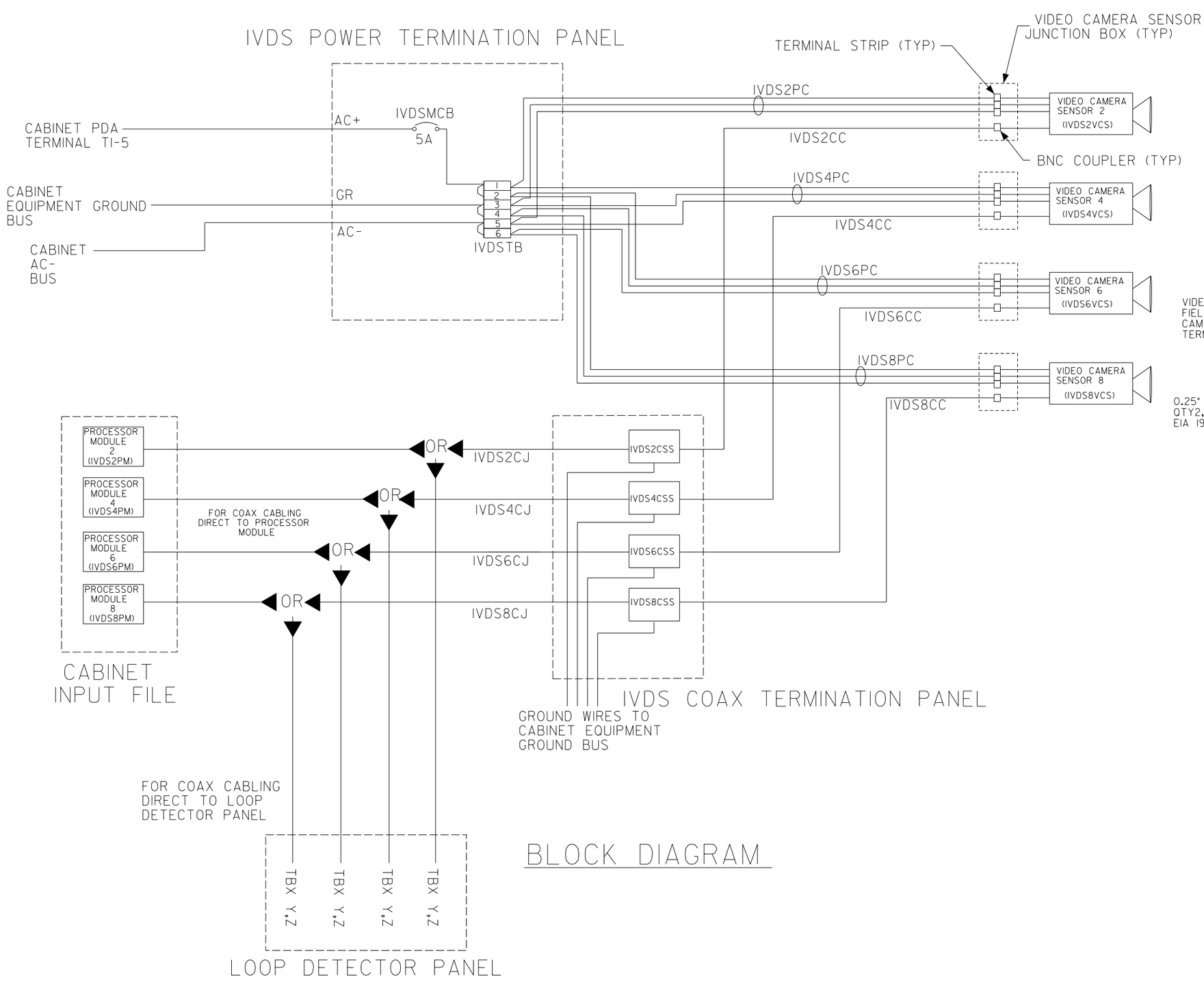

BLOCK DIAGRAM

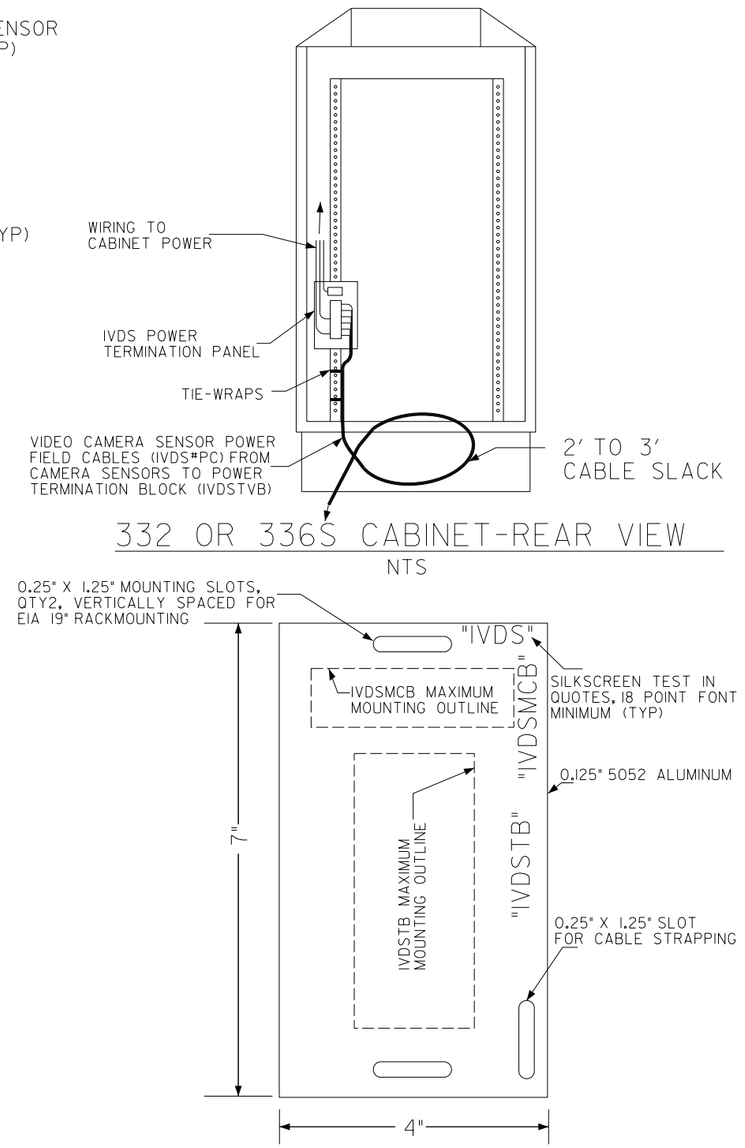

332 OR 336S CABINET-REAR VIEW

NTS

IVDS POWER TERMINATION PANEL

NTS

	DATE	DEPARTMENT OF TRANSPORTATION STATE OF GEORGIA	
	REVISION	CONSTRUCTION DETAILS DETAILS OF COAXIAL BLOCK DIAGRAM/ POWER TERMINATION PANEL	
		NO SCALE 3-3-16	
	BY	DESIGNED ____ DRAWN ____ TRACED ____ CHECKED ____	NUMBER TS-13A

STATE	PROJECT NUMBER	SHEET NO.	TOTAL SHEETS
GA.			

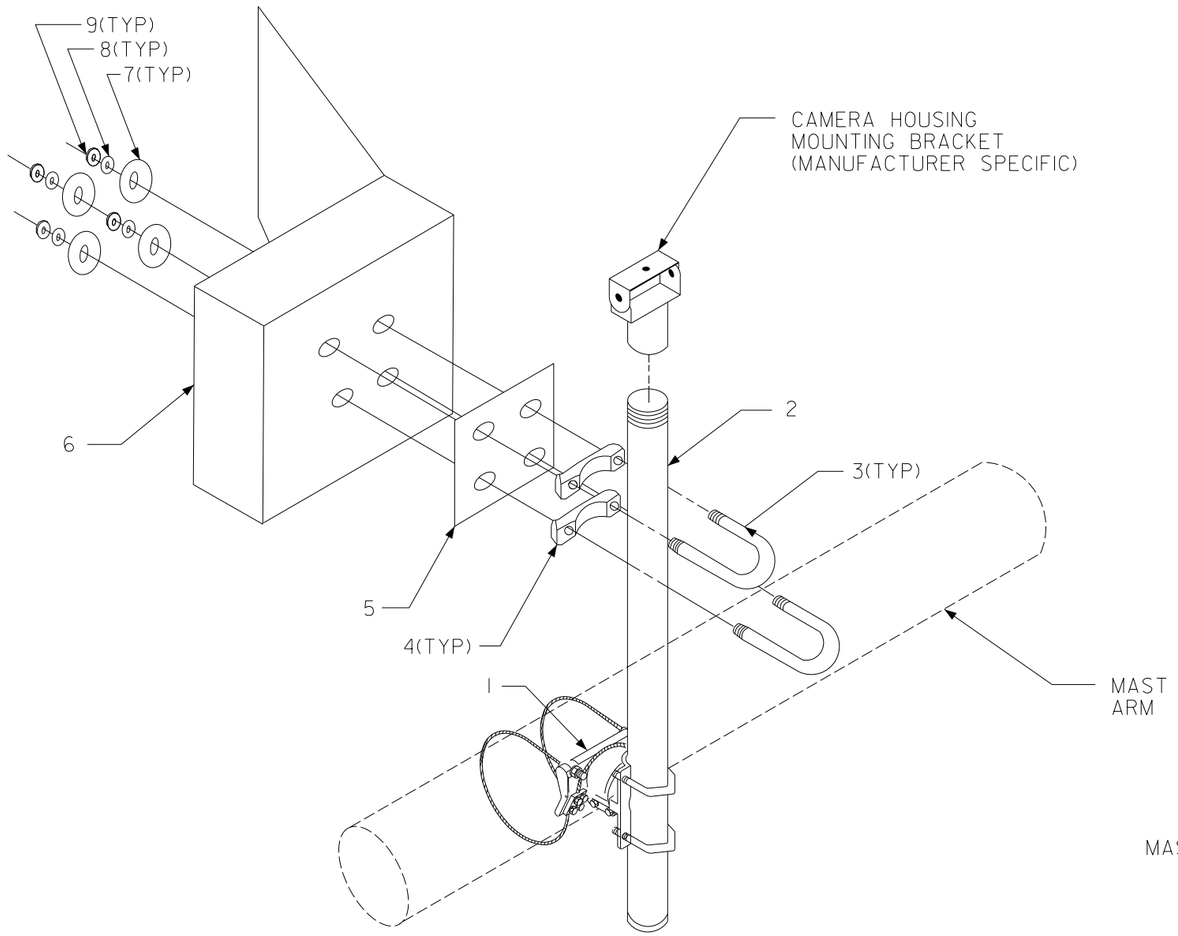

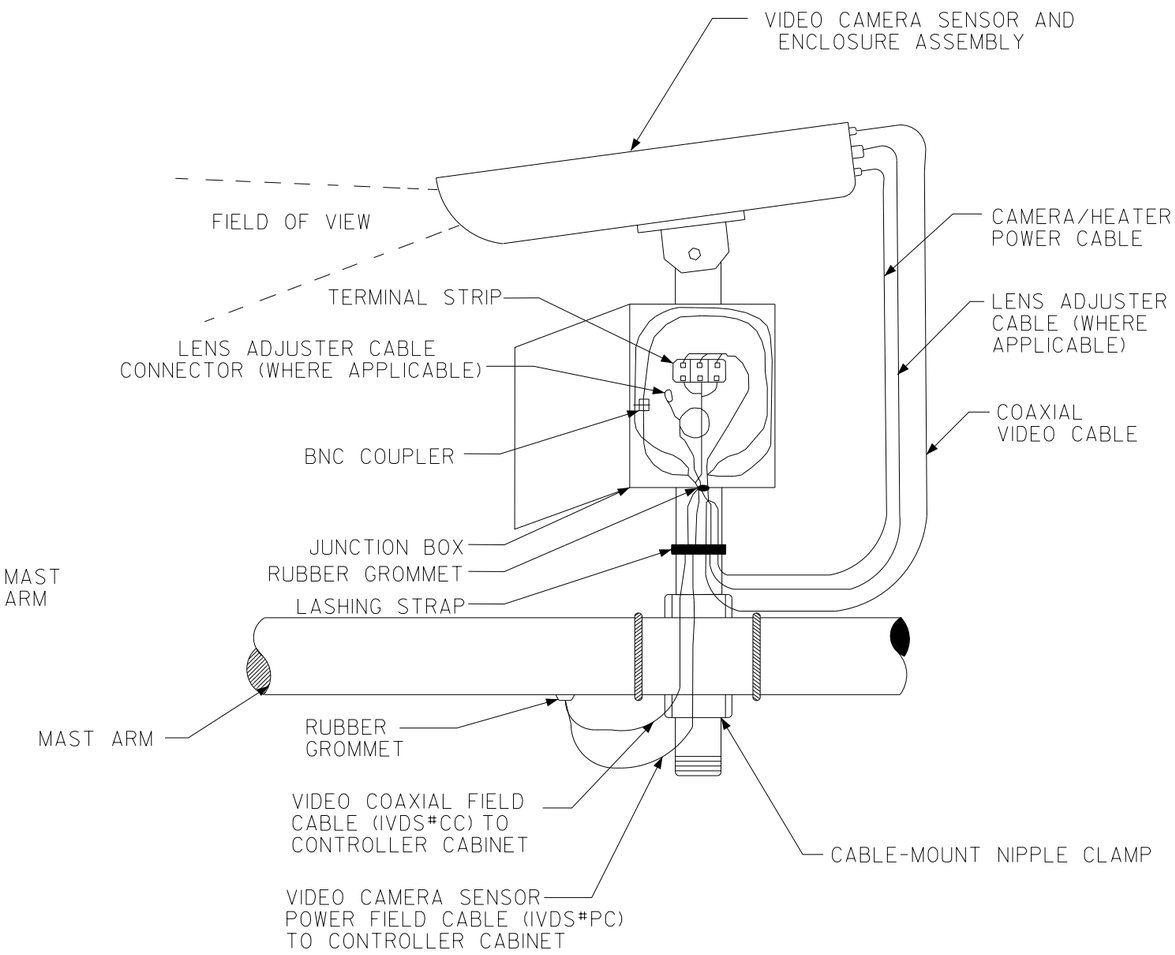

ITEM	DESCRIPTION	QTY
1	CABLE-MOUNT NIPPLE CLAMP	1
2	METAL SUPPORT POLE, 1 1/2-INCH X 24-INCH, THREAD BOTH ENDS	1
3	U-BOLT, 3/8-INCH COARSE, SS OR GLV, MINIMUM 2 3/4-INCH VERTICAL SEPERATION BETWEEN U-BOLTS	2
4	PIPE SADDLE, ALUMINUM	2
5	BACKING PLATE, 0.125-INCH 5052 ALUMINUM, 5-INCH X 5-INCH	1
6	VIDEO CAMERA SENSOR JUNCTION BOX	1
7	FENDERWASHER, 3/8-INCH, SS	4
8	LOCKWASHER, 3/8-INCH, SS	4
9	NUT, HEX 3/8-INCH COARSE, SS	4

SS - STAINLESS STEEL
GLV - HOT-DIPPED GALVANIZED STEEL

NOTE:
1. ALL MATERIALS LISTED SHALL BE INCLUDED IN THE BID PRICE FOR THE INTERSECTION VIDEO DETECTION SYSTEM ASSEMBLY.
2. COMPOSITE CABLES ARE ACCEPTABLE UPON MANUFACTURER'S RECOMMENDATION.

DATE
REVISION
BY

DEPARTMENT OF TRANSPORTATION
STATE OF GEORGIA

CONSTRUCTION DETAILS
DETAILS OF
VIDEO CAMERA SENSOR MOUNTING
WITH COAXIAL VIDEO CABLE
AND JUNCTION BOX

NO SCALE 3-3-16

DESIGNED ____
DRAWN ____
TRACED ____
CHECKED ____

NUMBER
TS-13B

STATE	PROJECT NUMBER	SHEET NO.	TOTAL SHEETS
GA.			

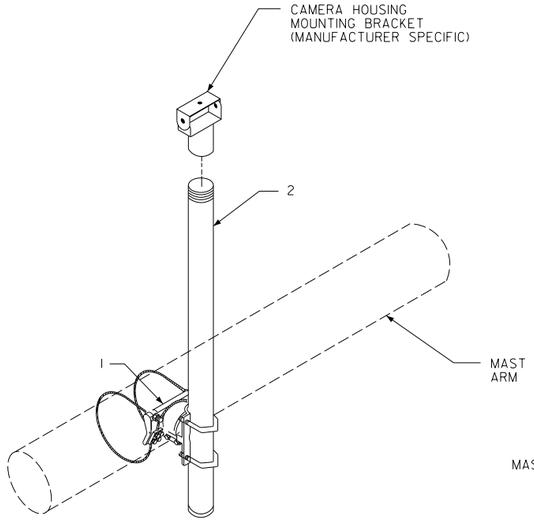

ITEM	DESCRIPTION	QTY
1	CABLE-MOUNT NIPPLE CLAMP	1
2	METAL SUPPORT POLE, 1½-INCH X 24-INCH, THREAD BOTH ENDS	1

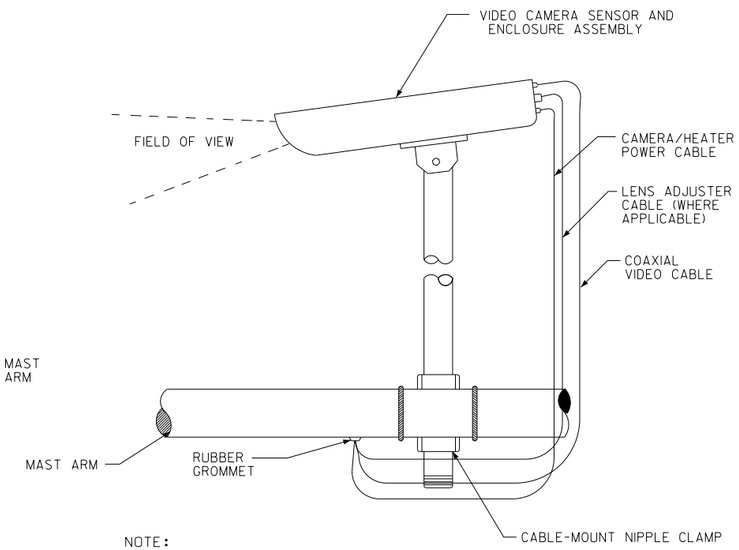

NOTE:
1. ALL MATERIALS LISTED SHALL BE INCLUDED IN THE BID PRICE FOR THE INTERSECTION VIDEO DETECTION SYSTEM ASSEMBLY.
2. COMPOSITE CABLES ARE ACCEPTABLE UPON MANUFACTURER'S RECOMMENDATION.

VIDEO CAMERA SENSOR MOUNTING (WITH COAXIAL CABLE)

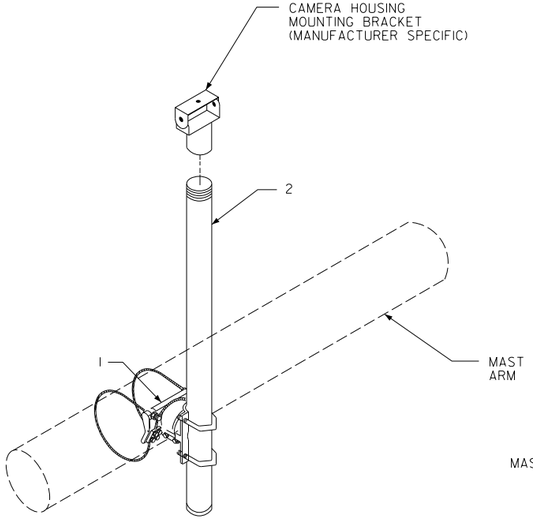

ITEM	DESCRIPTION	QTY
1	CABLE-MOUNT NIPPLE CLAMP	1
2	METAL SUPPORT POLE, 1½-INCH X 24-INCH, THREAD BOTH ENDS	1

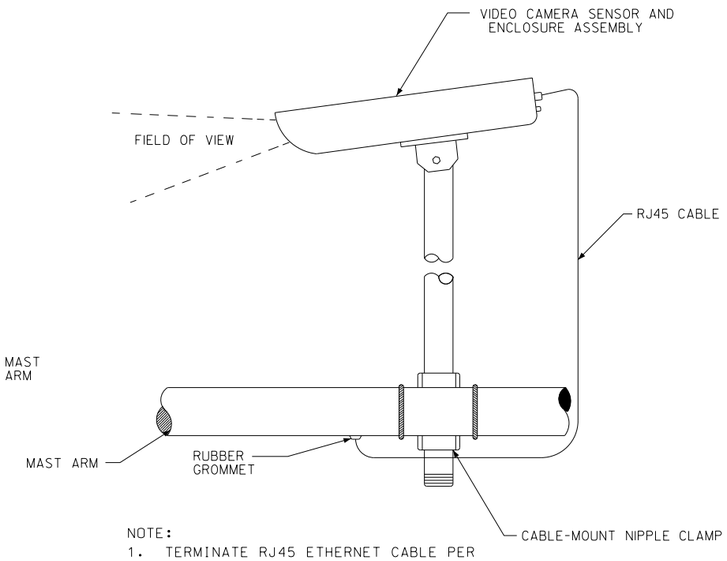

NOTE:
1. TERMINATE RJ45 ETHERNET CABLE PER MANUFACTURER'S SPECIFICATIONS.
2. ALL MATERIALS LISTED SHALL BE INCLUDED IN THE BID PRICE FOR THE INTERSECTION VIDEO DETECTION SYSTEM ASSEMBLY.
3. COMPOSITE CABLES ARE ACCEPTABLE UPON MANUFACTURER'S RECOMMENDATION.

VIDEO CAMERA SENSOR MOUNTING (WITH ETHERNET CABLE)

DEPARTMENT OF TRANSPORTATION
STATE OF GEORGIA

CONSTRUCTION DETAILS

DETAILS OF
VIDEO CAMERA SENSOR MOUNTING
WITH COAXIAL AND ETHERNET CABLES

NO SCALE — 3-3-16

DATE | REVISION | BY

DESIGNED ____
DRAWN ____
TRACED ____
CHECKED ____

NUMBER
TS-13C