GDOT Georgia Department of Transportation | P. I. No.

LEVEL GRADE SINGLE INLET

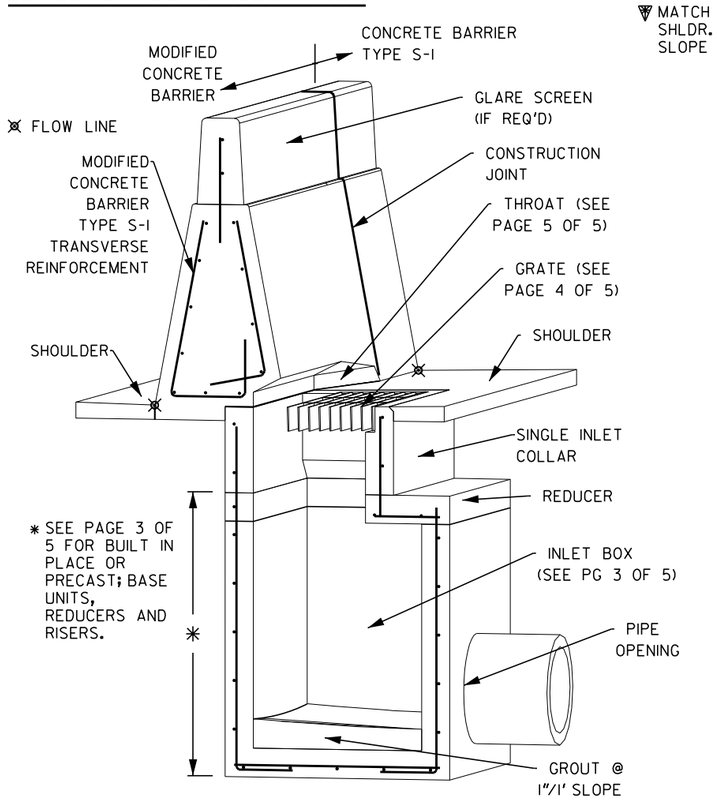

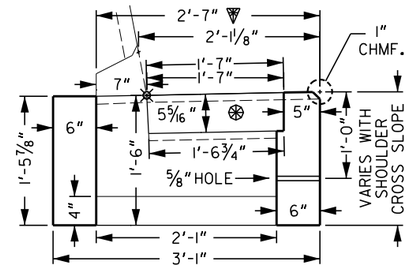

SECTION A-A

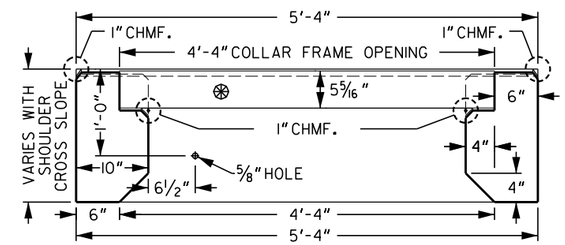

SECTION B-B

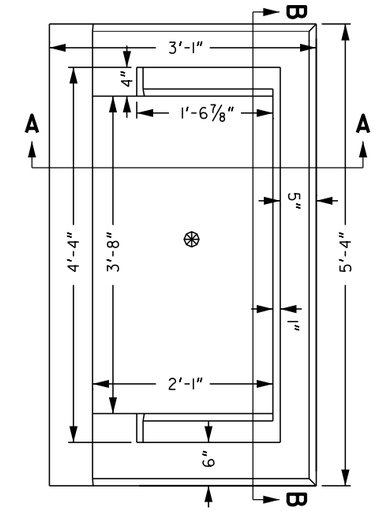

INLET COLLAR PLAN VIEW

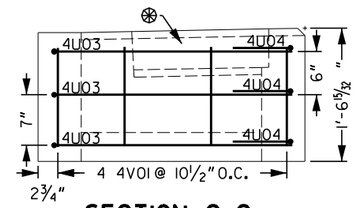

SECTION C-C

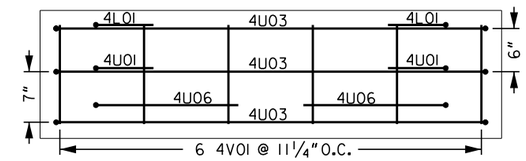

SECTION E-E

GRATE NOT SHOWN FOR CLARITY.

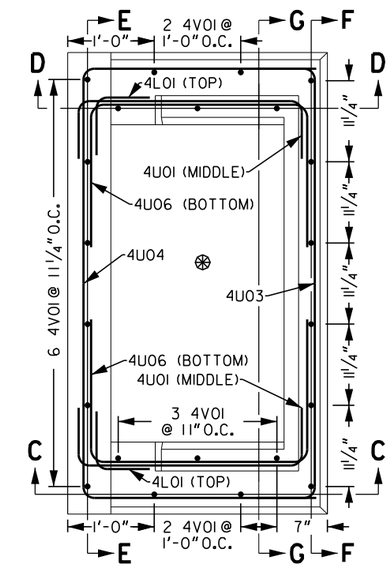

INLET COLLAR PLAN VIEW REINFORCEMENT

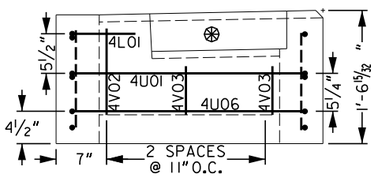

SECTION D-D

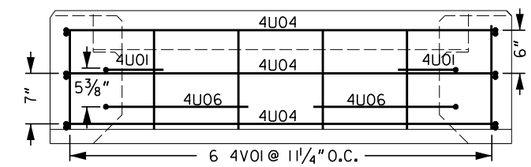

SECTION F-F

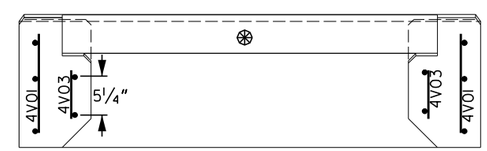

SECTION G-G

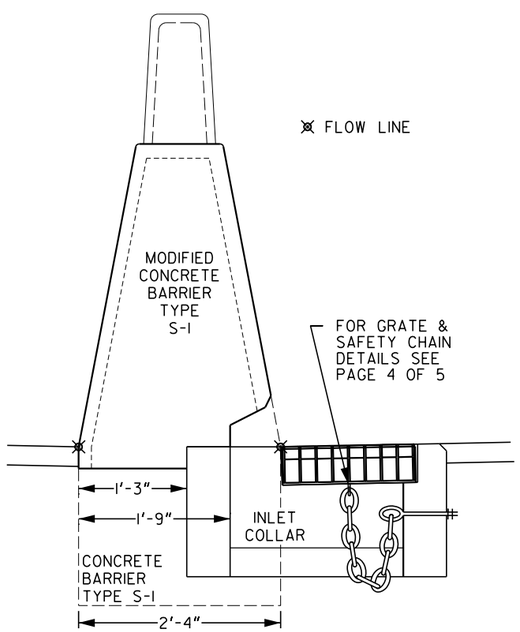

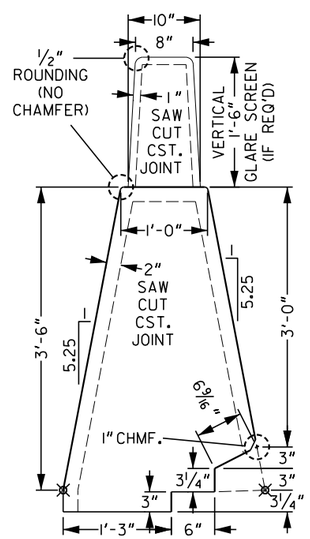

MODIFIED CONCRETE BARRIER DIMENSION DETAIL

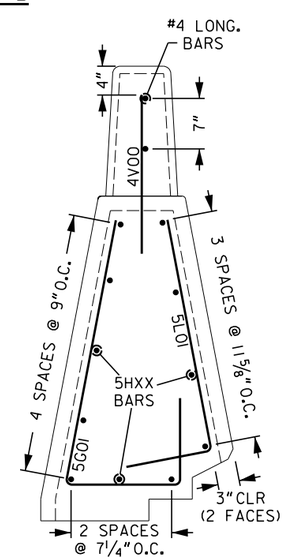

MODIFIED CONCRETE BARRIER TRANSVERSE REINFORCEMENT DETAIL (@ 6" O.C.)

				DATE	DEPARTMENT OF TRANSPORTATION STATE OF GEORGIA	
				REVISION	STANDARD NARROW MEDIAN INLET TYPE 5001-N-1 LEVEL GRADE SINGLE INLET (ADJACENT TO CONCRETE BARRIER TYPE S-1)	
					NO SCALE	APRIL 2020
				BY	DES. JAHR DRW. JAHR TRA. JAHR CHK. ____	(SUBMITTED) R Christopher Rudd STATE DESIGN POLICY ENGR. (APPROVED) Margaret B Pitts CHIEF ENGINEER	NUMBER 5001-N 1-A OF 5

GDOT Georgia Department of Transportation | P. I. No.

LEVEL GRADE DOUBLE INLET

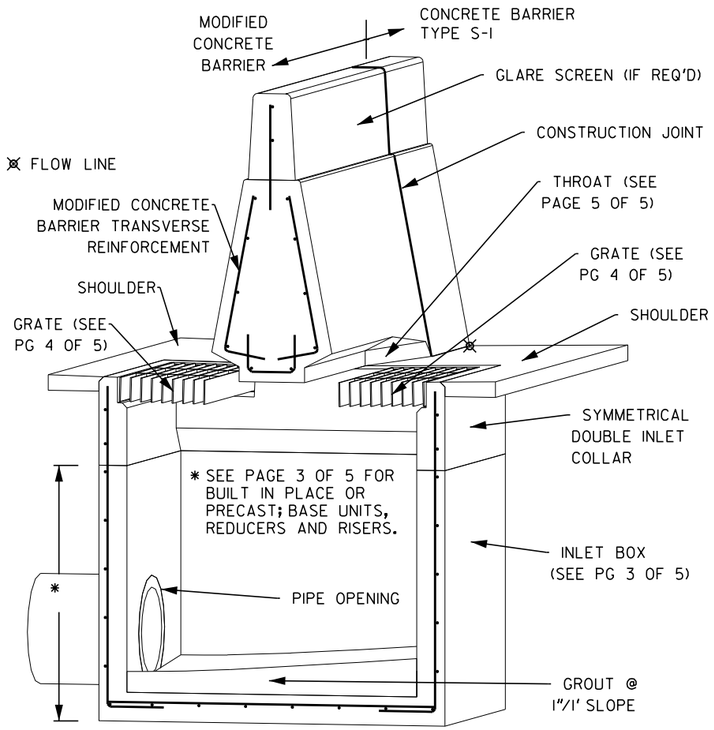

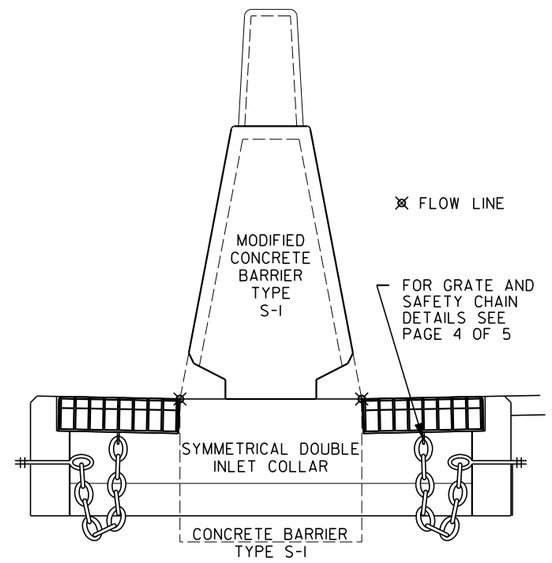

GRATE NOT SHOWN FOR CLARITY

MATCH SHOULDER SLOPE

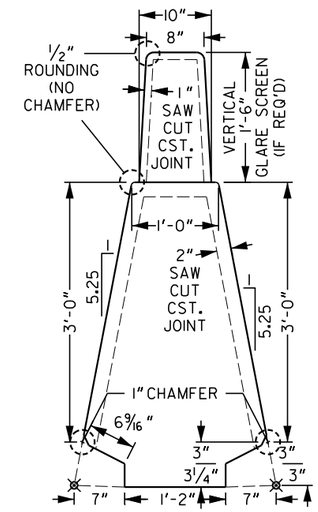

MODIFIED CONCRETE BARRIER DETAIL

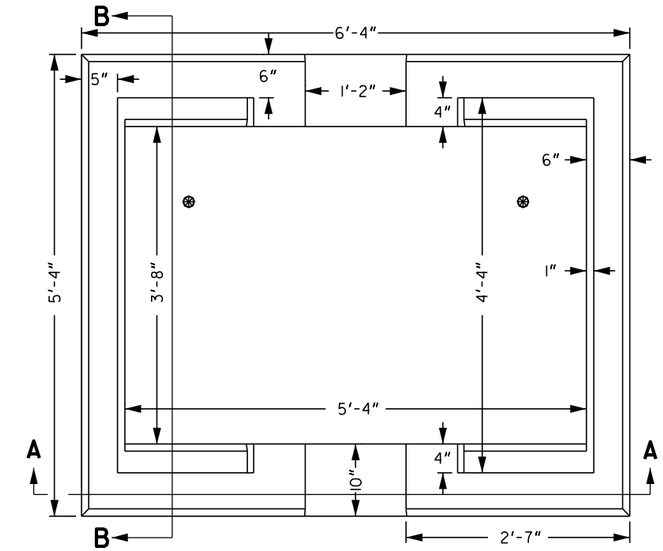

INLET COLLAR PLAN VIEW

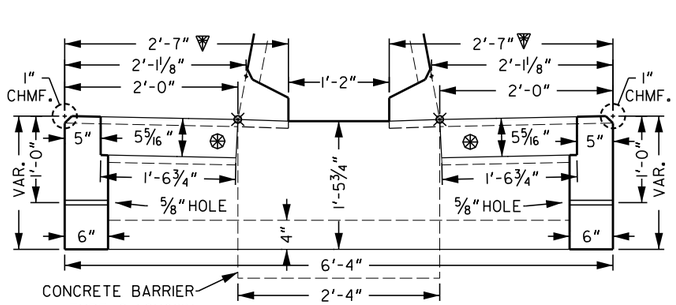

SECTION A-A

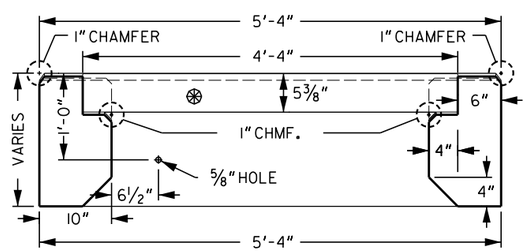

SECTION B-B

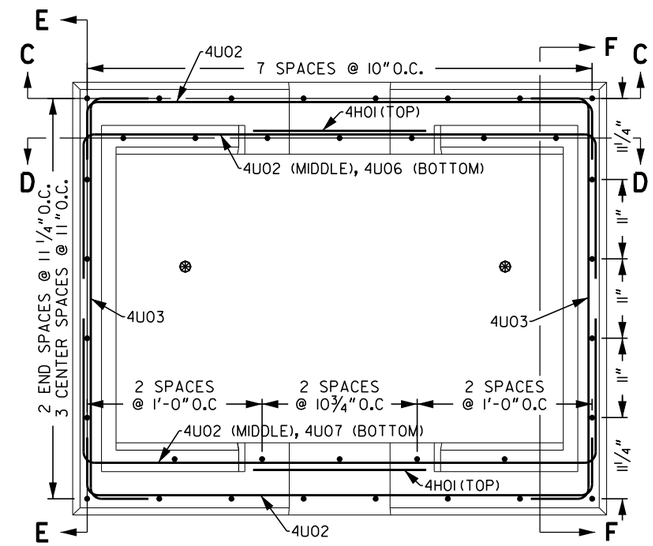

INLET COLLAR REINFORCEMENT DETAIL PLAN VIEW

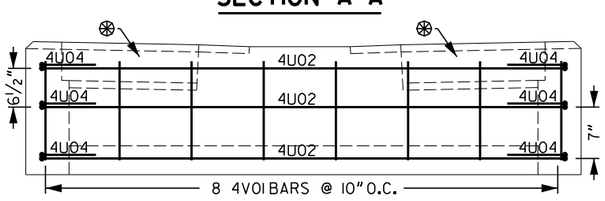

SECTION C-C

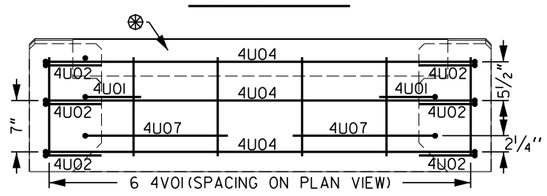

SECTION E-E

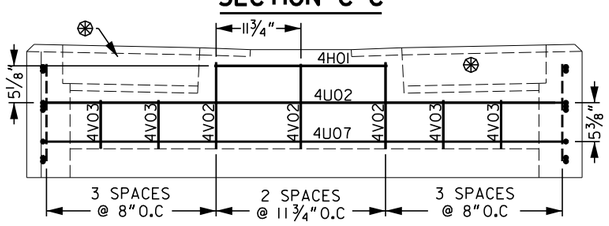

SECTION D-D

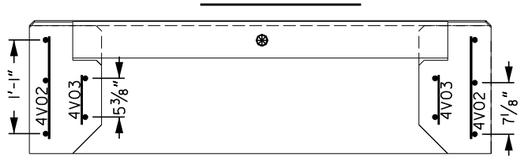

SECTION F-F

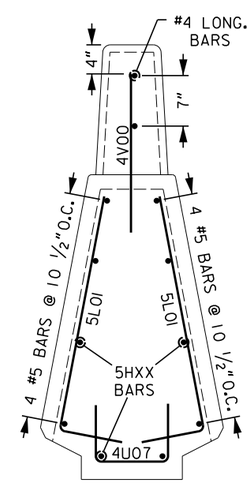

MODIFIED CONCRETE BARRIER TRANSVERSE REINFORCEMENT DETAIL (@ 6" O.C.)

DATE	DEPARTMENT OF TRANSPORTATION STATE OF GEORGIA	
REVISION	STANDARD NARROW MEDIAN INLET TYPE 5001-N-2 LEVEL GRADE DOUBLE INLET (ADJACENT TO CONCRETE BARRIER TYPE S-1)	
	NO SCALE	APRIL 2020
BY	DES. JAHR (SUBMITTED) R Christopher Rudd STATE DESIGN POLICY ENGR. DRW. JAHR TRA. ____ (APPROVED) Margaret B Pitts CHIEF ENGINEER CHK. ____	NUMBER 5001-N 1-B OF 5

GDOT Georgia Department of Transportation | P. I. No.

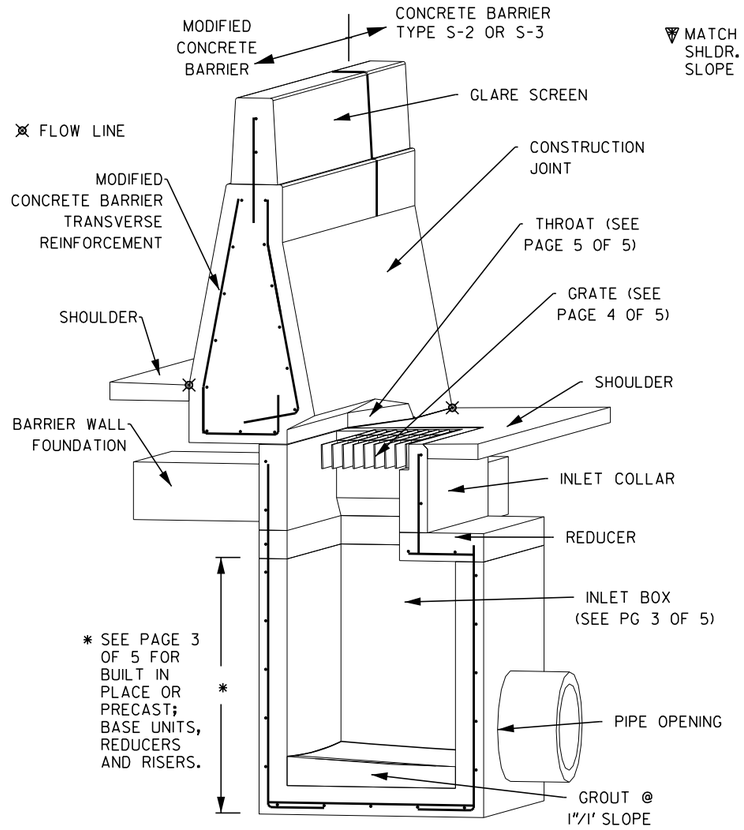

INDEPENDENT GRADE SINGLE BOTTOM INLET

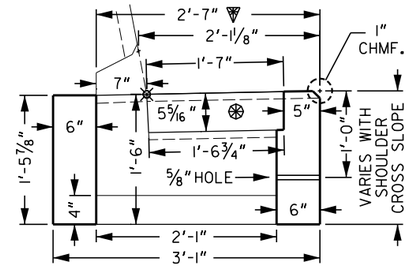

SECTION A-A

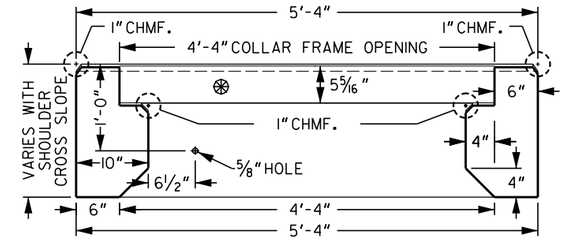

SECTION B-B

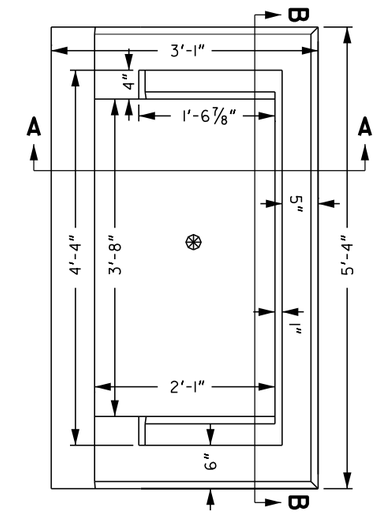

INLET COLLAR PLAN VIEW

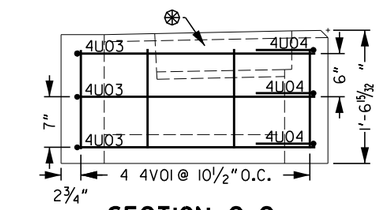

SECTION C-C

GRATE NOT SHOWN FOR CLARITY.

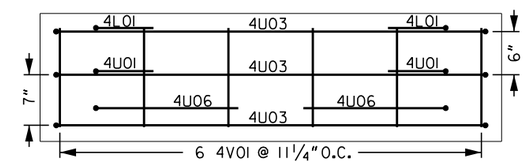

SECTION E-E

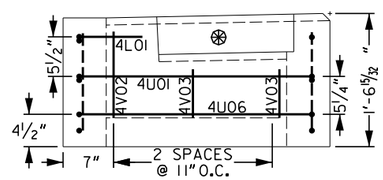

SECTION D-D

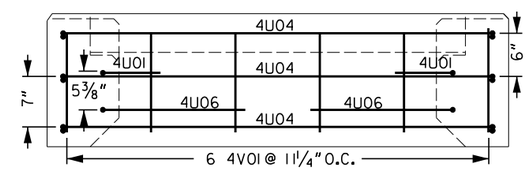

SECTION F-F

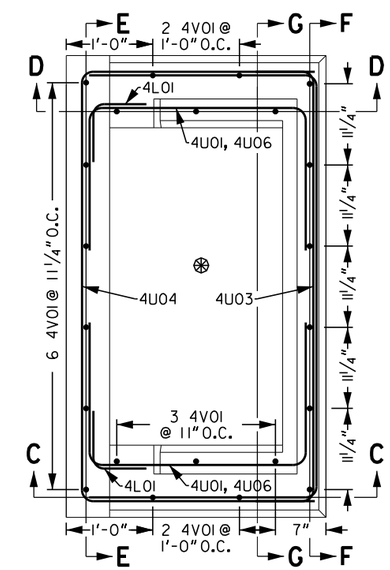

INLET COLLAR PLAN VIEW REINFORCEMENT

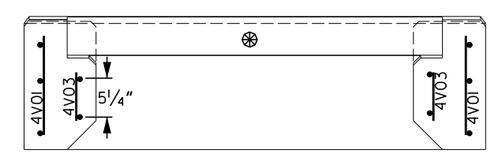

SECTION G-G

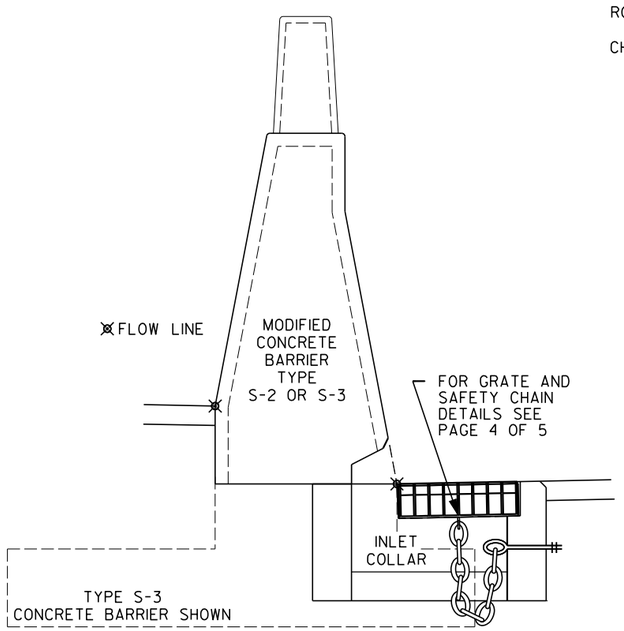

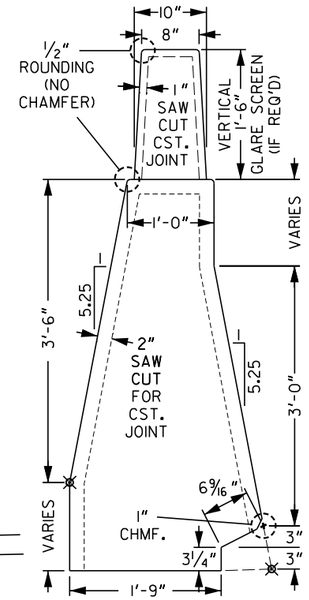

MODIFIED CONCRETE BARRIER DIMENSION DETAIL

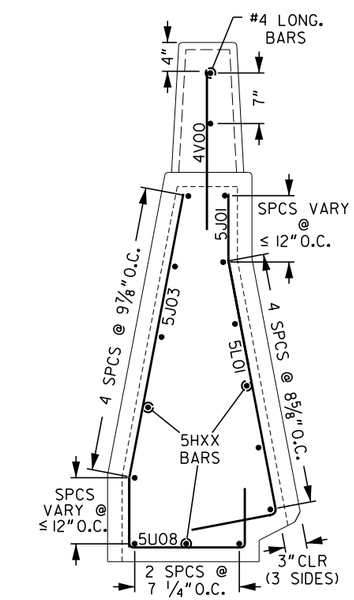

MODIFIED CONCRETE BARRIER TRANSVERSE REINFORCEMENT DETAIL (@ 6" O.C.)

					DATE	DEPARTMENT OF TRANSPORTATION STATE OF GEORGIA
					REVISION	STANDARD NARROW MEDIAN INLET TYPE 5001-N-3 INDEPENDENT GRADE SINGLE BOTTOM INLET (ADJACENT TO CONCRETE BARRIER TYPE S-2 OR S-3) NO SCALE — APRIL 2020
					BY	DES. JAHR (SUBMITTED) T. Christopher Rudd STATE DESIGN POLICY ENGR. DRW. JAHR TRA. ____ (APPROVED) Margaret B. Pickett CHIEF ENGINEER CHK. ____

NUMBER 5001-N

1-C OF 5

INDEPENDENT GRADE SINGLE TOP INLET

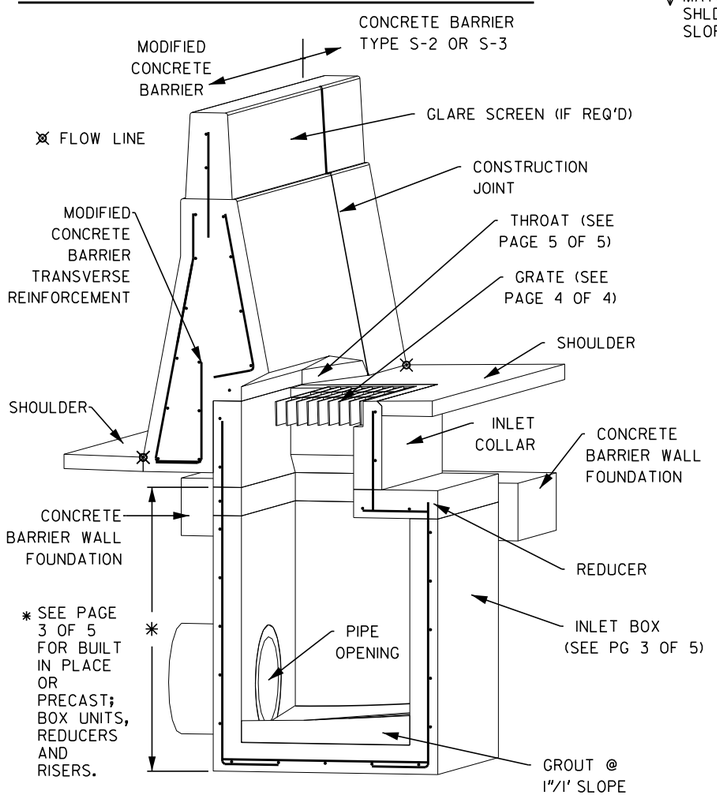

MATCH SHLDR. SLOPE

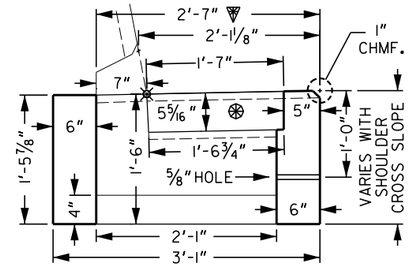

SECTION A-A

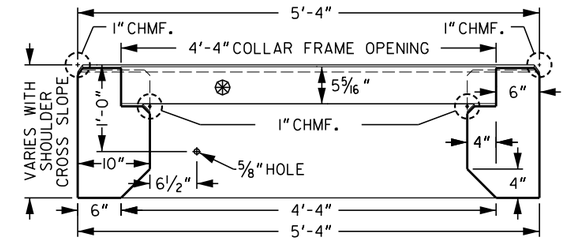

SECTION B-B

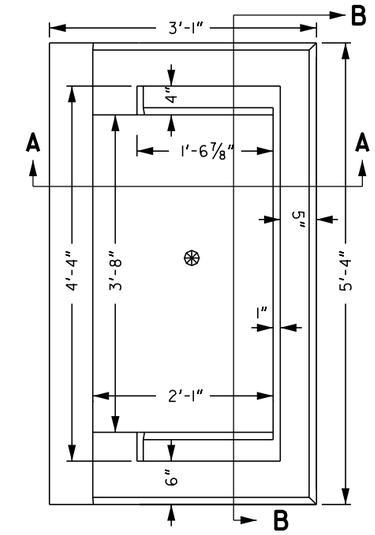

INLET COLLAR PLAN VIEW

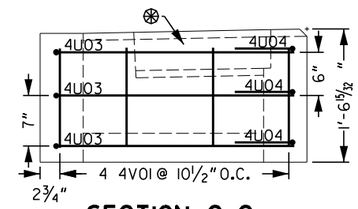

SECTION C-C

GRATE NOT SHOWN FOR CLARITY.

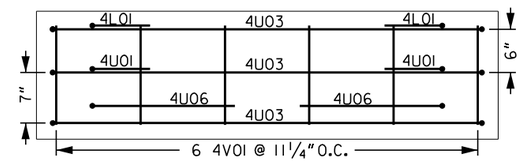

SECTION E-E

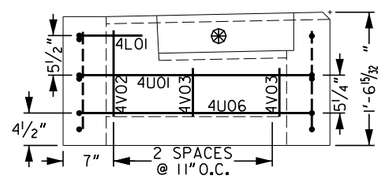

SECTION D-D

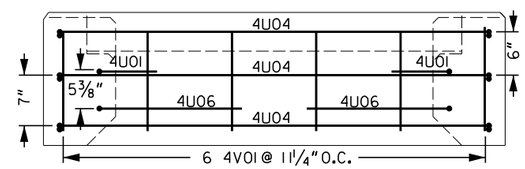

SECTION F-F

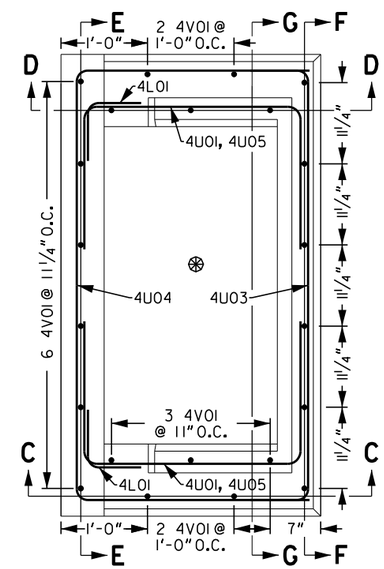

INLET COLLAR PLAN VIEW REINFORCEMENT

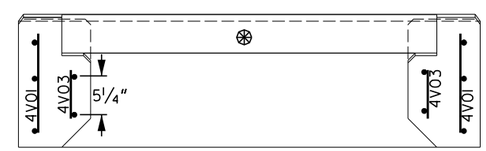

SECTION G-G

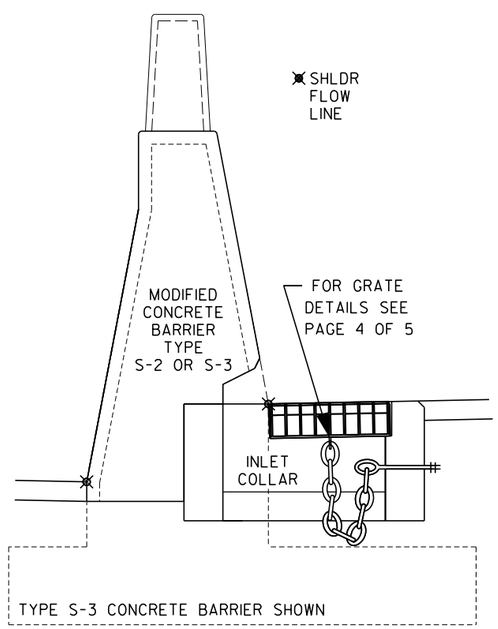

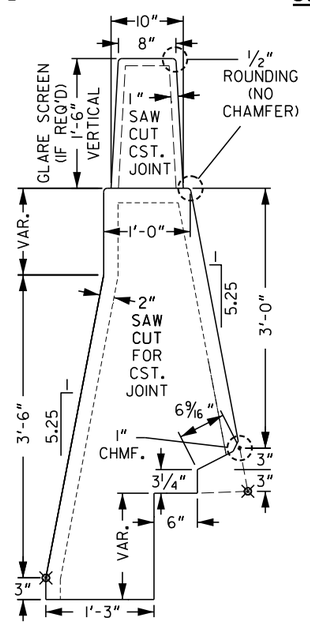

MODIFIED CONCRETE BARRIER DETAIL

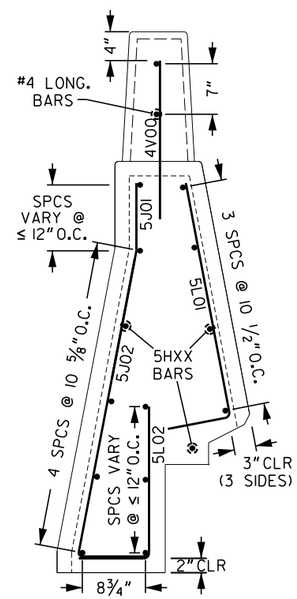

MODIFIED CONCRETE BARRIER TRANSVERSE REINFORCEMENT DETAIL (@ 6" O.C.)

GDOT Georgia Department of Transportation

P. I. No.

DEPARTMENT OF TRANSPORTATION
STATE OF GEORGIA

STANDARD
NARROW MEDIAN INLET
TYPE 5001-N-4
INDEPENDENT GRADE SINGLE TOP INLET
(ADJACENT TO CONCRETE BARRIER TYPE S-2 OR S-3)

NO SCALE — APRIL 2020

DATE | REVISION | BY

DES. JAHR
DRW. JAHR
TRA. ____
CHK. ____

(SUBMITTED) R. Christopher Rudd
STATE DESIGN POLICY ENGR.
(APPROVED) Margaret B. Pitcock
CHIEF ENGINEER

NUMBER 5001-N
1-D OF 5

INDEPENDENT GRADE DOUBLE INLET

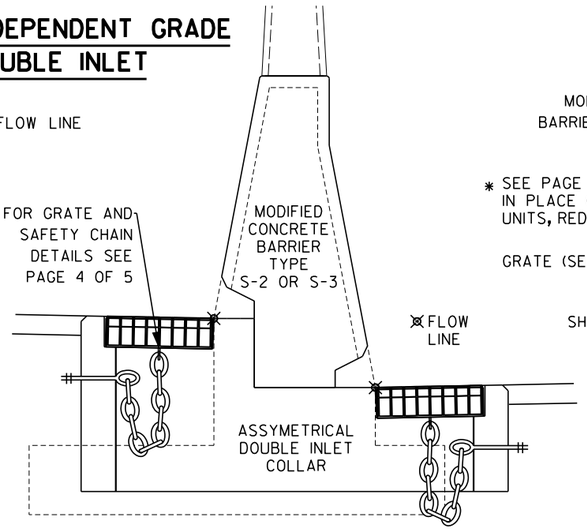

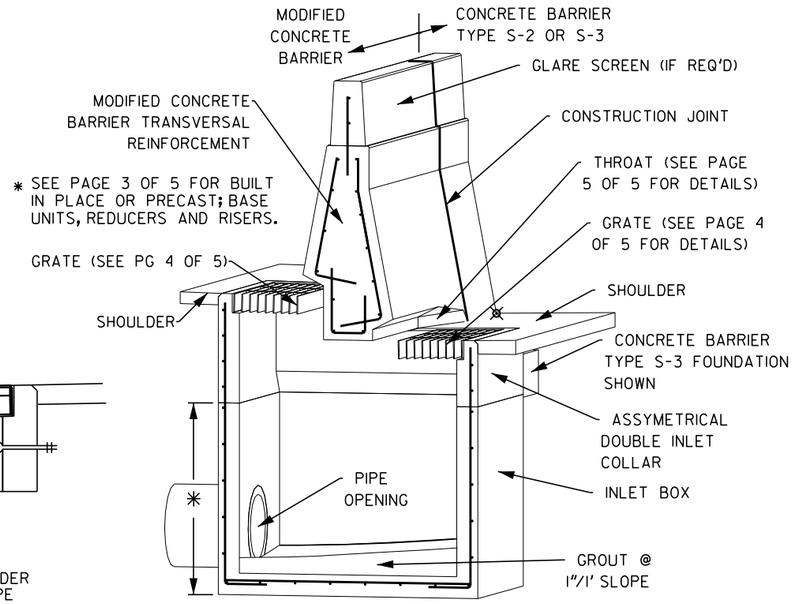

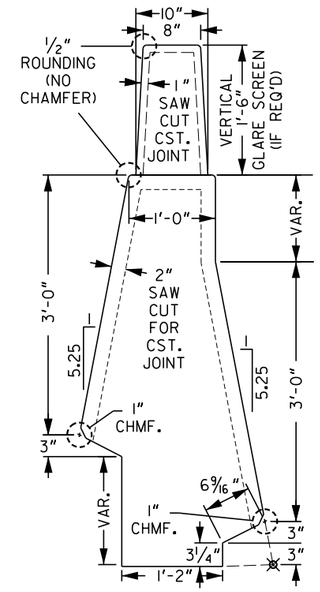

MODIFIED CONCRETE BARRIER DIMENSION DETAIL

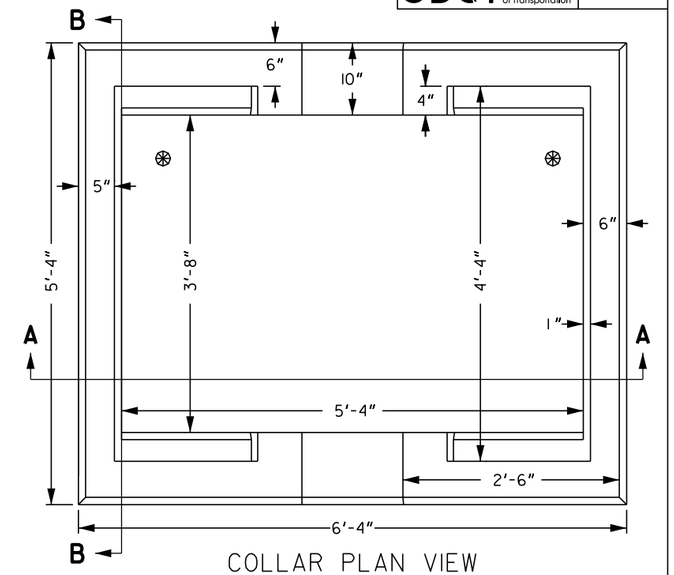

COLLAR PLAN VIEW

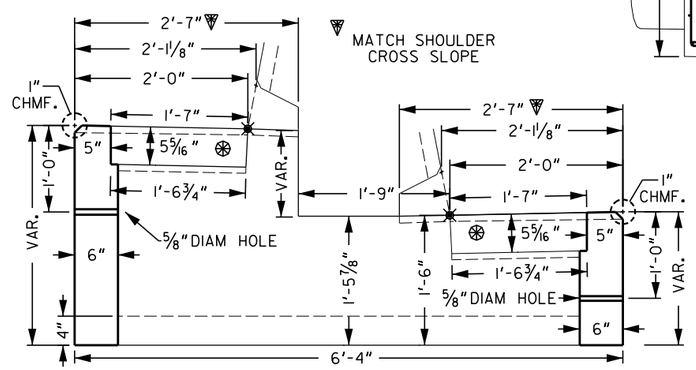

SECTION A-A

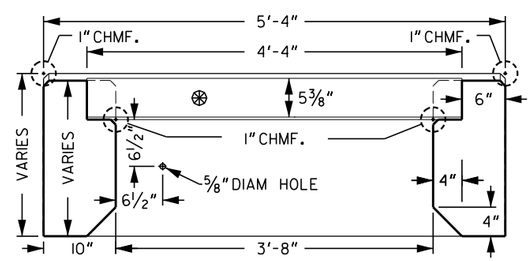

SECTION B-B

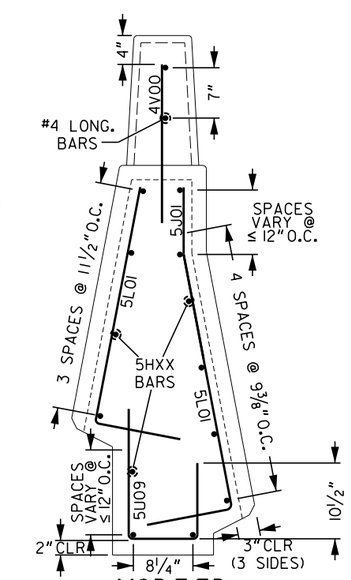

MODIFIED CONCRETE BARRIER TRANSVERSE REINFORCEMENT DETAIL (6" O.C.)

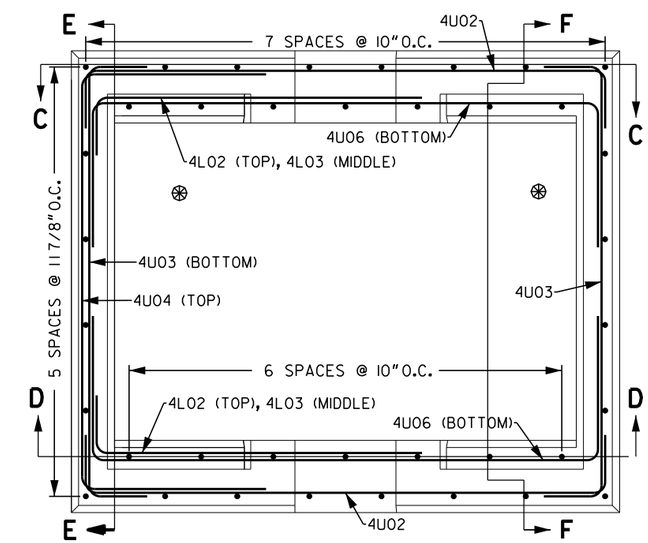

COLLAR REINFORCEMENT PLAN VIEW

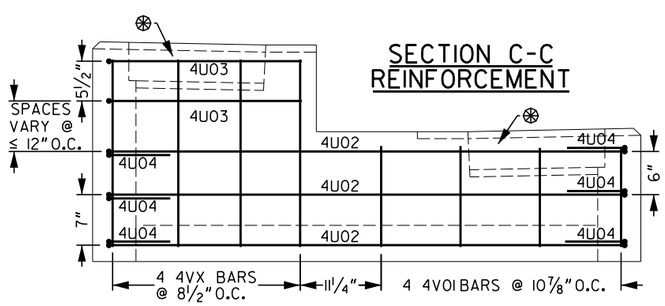

SECTION C-C REINFORCEMENT

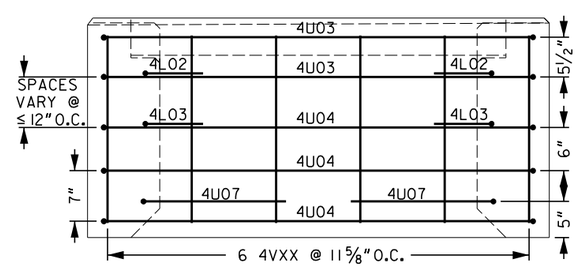

SECTION E-E

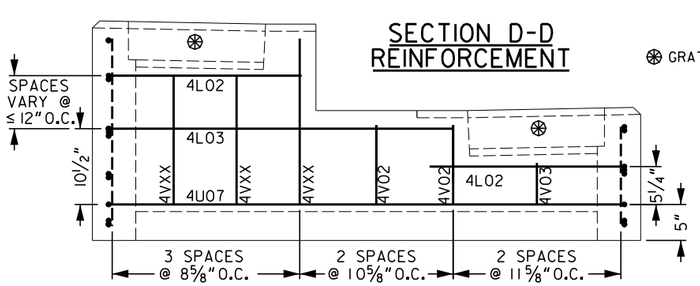

SECTION D-D REINFORCEMENT

GRATE NOT SHOWN FOR CLARITY.

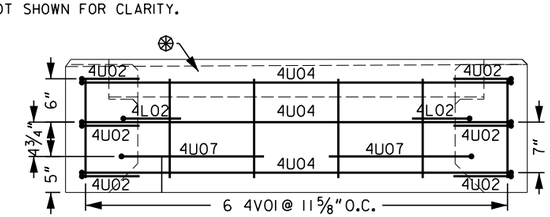

SECTION F-F

GDOT Georgia Department of Transportation

P. I. No.

DATE	DEPARTMENT OF TRANSPORTATION STATE OF GEORGIA		
REVISION	STANDARD NARROW MEDIAN INLET TYPE 5001-N-5 INDEPENDENT GRADE DOUBLE INLET (ADJACENT TO CONCRETE BARRIER TYPE S-2 OR S-3)		
	NO SCALE		APRIL 2020
BY	DES. JAHR DRW. JAHR TRA. ____ CHK. ____	(SUBMITTED) R Christopher Rudd STATE DESIGN POLICY ENGR. (APPROVED) Margaret B Pickett CHIEF ENGINEER	NUMBER 5001-N 1-E OF 5

GDOT Georgia Department of Transportation

P. I. No.

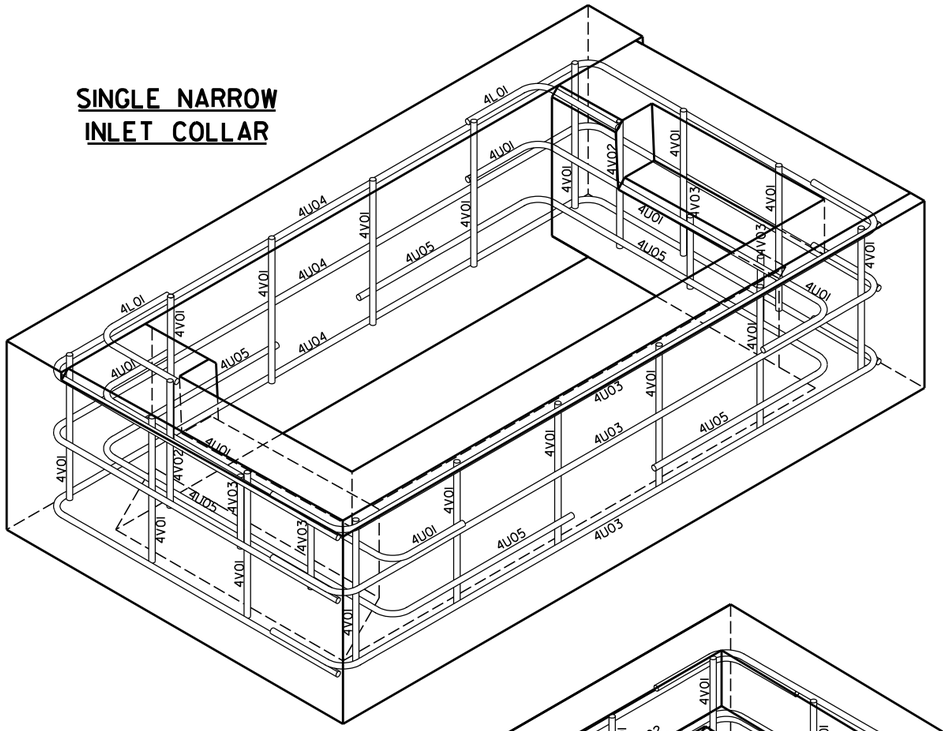

SINGLE NARROW INLET COLLAR

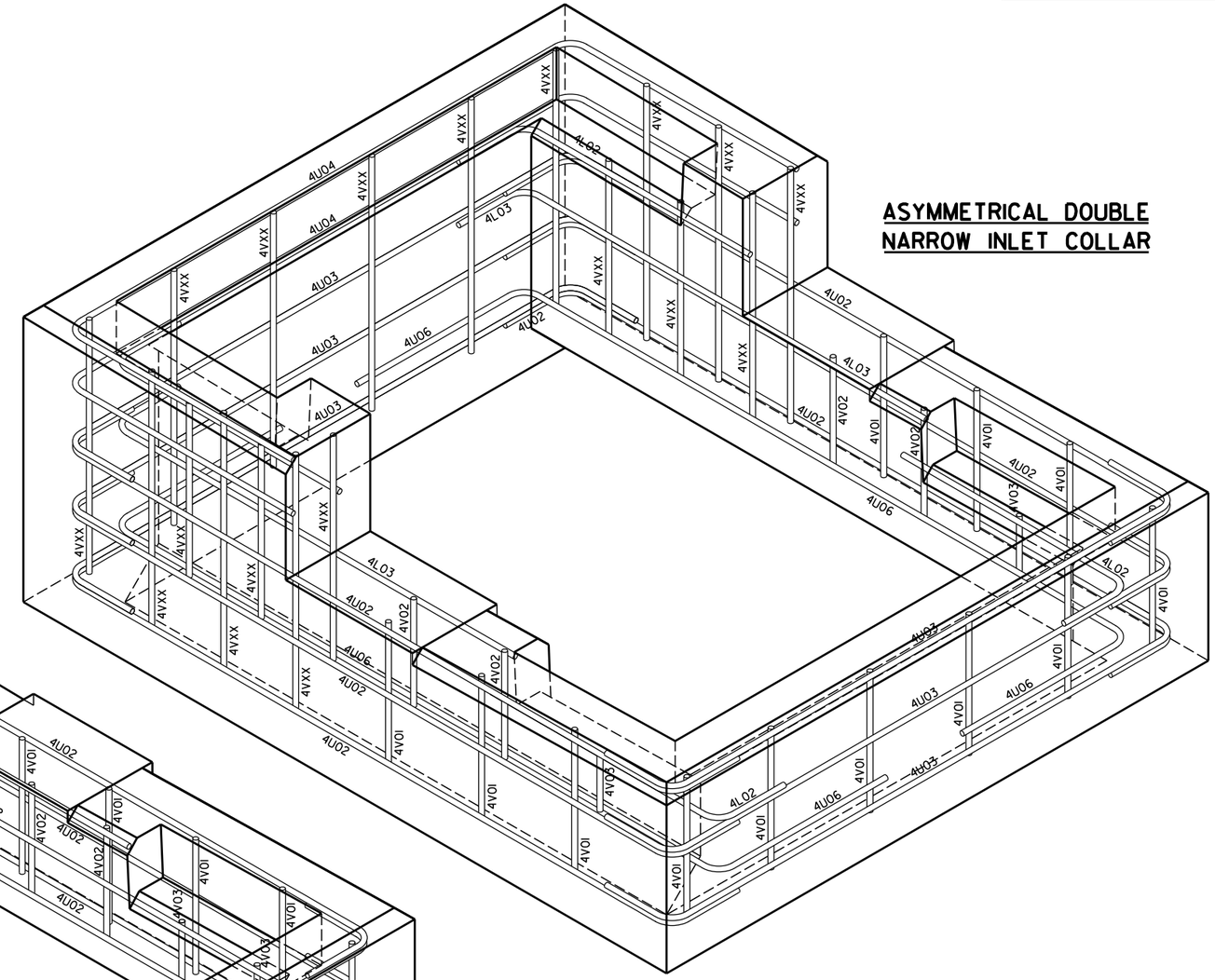

ASYMMETRICAL DOUBLE NARROW INLET COLLAR

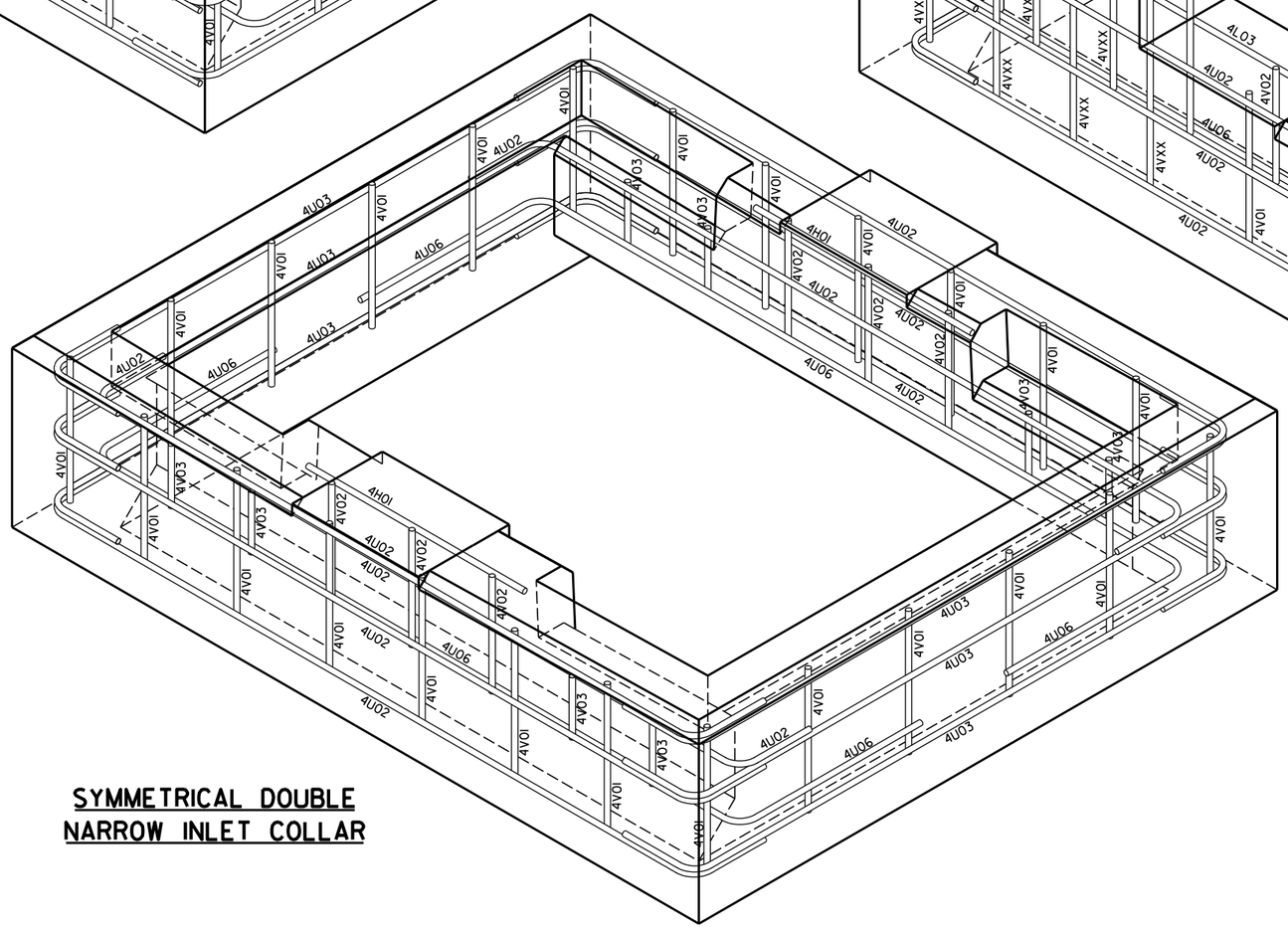

SYMMETRICAL DOUBLE NARROW INLET COLLAR

NOTE:
SEE PAGE 4 OF 5 FOR REBAR SCHEDULE AND BENDING DETAILS.

					DATE	DEPARTMENT OF TRANSPORTATION STATE OF GEORGIA
					REVISION	STANDARD NARROW MEDIAN INLET ISOMETRIC VIEW AND REBAR DETAIL FOR NARROW INLET COLLARS
						NO SCALE — APRIL 2020
					BY	DES. JAHR (SUBMITTED) R Christopher Rudd STATE DESIGN POLICY ENGR. DRW. JAHR TRA. ____ (APPROVED) Margaret B Pirkle CHIEF ENGINEER CHK. ____

NUMBER 5001-N

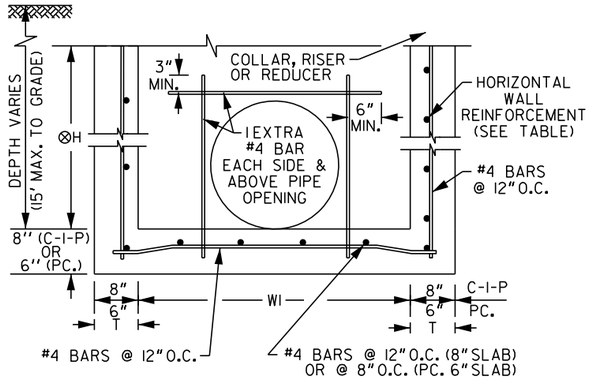

LONGITUDINAL SECTION

(CROSS DRAIN PIPE OPENING SHOWN)

⊗ FOR C-I-P, CONSTRUCTION JOINT PERMITTED BETWEEN THESE LIMITS. SEE TABLES FOR MINIMUM DIMENSIONS.

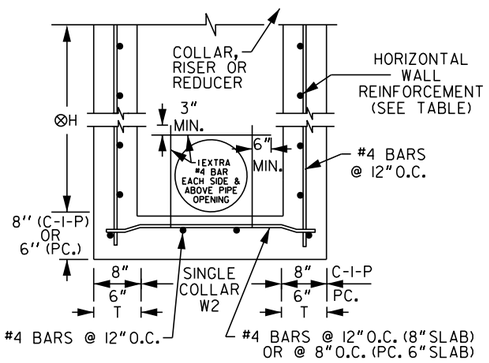

TRANSVERSE SECTION OF SINGLE COLLAR INLETS TYPE N-1, N-3, OR N-4

(LONGITUDINAL DRAIN PIPE OPENING SHOWN)

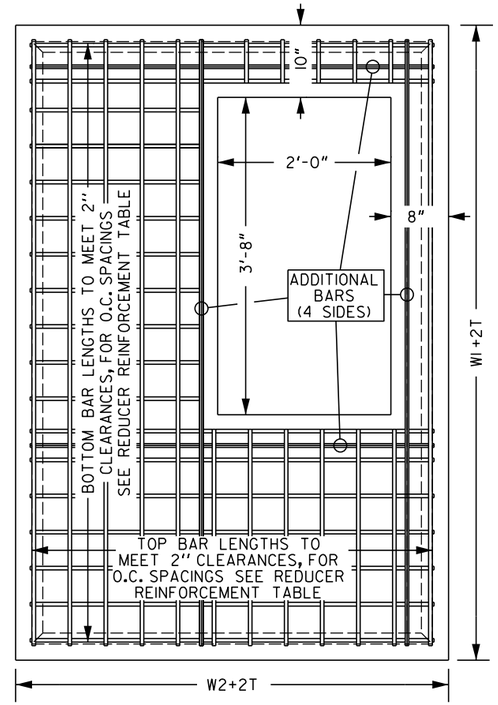

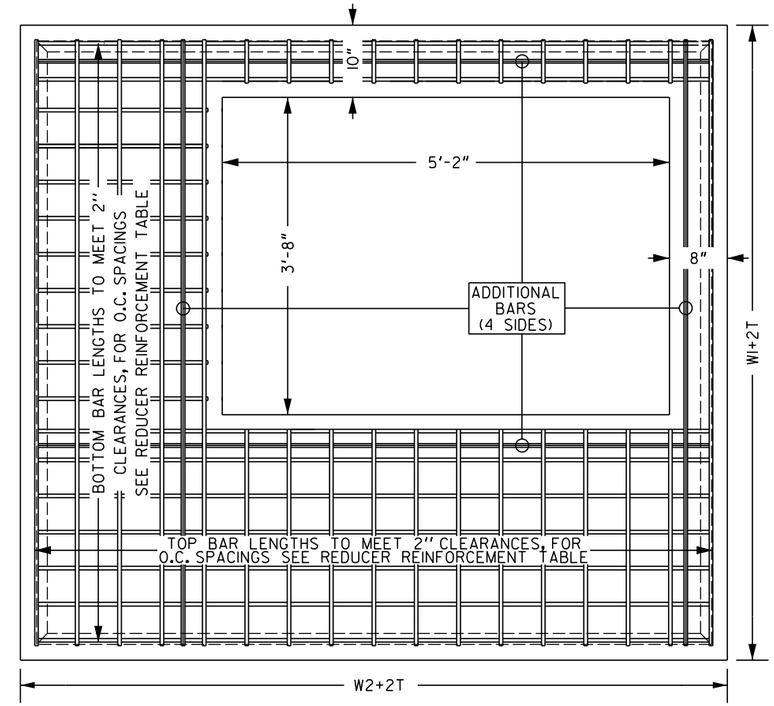

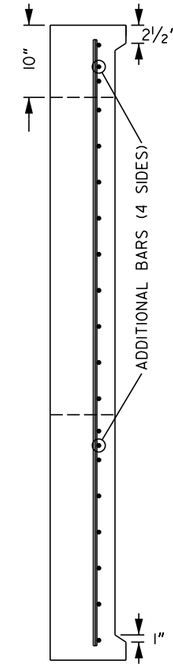

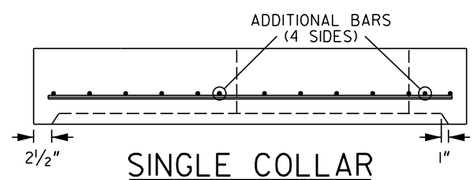

SINGLE COLLAR REDUCER SLAB DETAIL

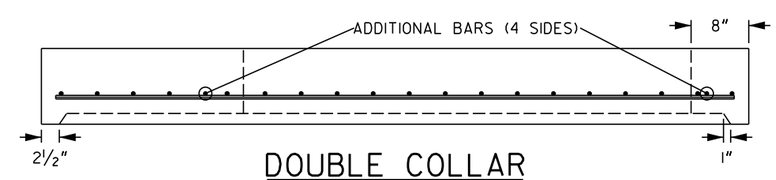

DOUBLE COLLAR REDUCER SLAB DETAIL

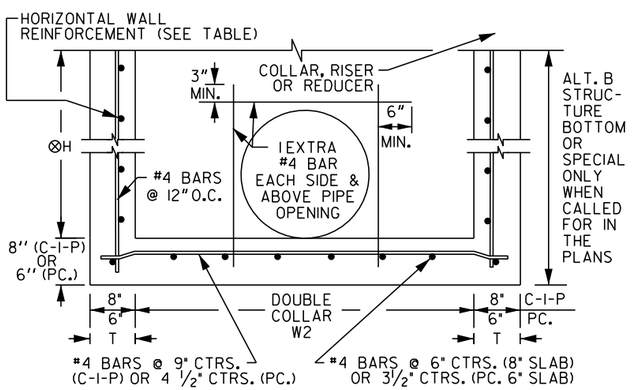

TRANSVERSE SECTION FOR DOUBLE COLLAR INLETS TYPE N-2 OR N-5

(LONGITUDINAL DRAIN PIPE OPENING SHOWN)

NOTE:
IF THE BASE IS LARGER THAN THE COLLAR, USE REDUCER THAT FITS FLUSH WITH EXTERIOR BASE WALLS.

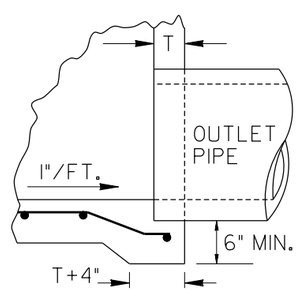

ALTERNATE TO INVERT

HORIZONTAL WALL REINFORCEMENT				
T (WALL THICKNESS)	SCHEDULE	AREA IN2/FT	MAX. SPACING BARS	MAX. SPACING WWF
0"-3"	A12	0.20	12"	8"
3"-6"	A6	0.20	6"	5"
6"-9"	B5.5	0.24	5½"	5"
9"-15"	C6.5	0.37	6½"	6"

GREATER WI OR W2	BAR SIZE	S MAX.
44"	#4	6"
48"	#4	6"
54"	#4	6"
60"	#5	6"
66"	#6	6"
72"	#6	5½"
84"	#6	5"

BOX DIMENSIONS FOR DROP INLET WITH CROSS DRAIN PIPE		
PIPE SIZE	WI+2T	MIN. HEIGHT ⊗
18"	5'-4"	4'-2"
24"	5'-4"	4'-9"
30"	5'-4"	5'-4"
36"	5'-4"	6'-4"
42"	5'-4"	7'-8"
48"	5'-4"	9'-0"
54"	5'-9"	10'-4"
60"	6'-4"	11'-8"
72"	6'-4"	11'-8"

BOX DIMENSIONS FOR DROP INLET WITH LONGITUDINAL PIPE			
PIPE SIZE	SINGLE COLLAR W2+2T	DOUBLE COLLAR W2+2T	MIN. HEIGHT ⊗
18"	4'-3"	10'-2"	4'-2"
24"	4'-3"	10'-2"	4'-9"
30"	4'-3"	10'-2"	5'-4"
36"	4'-3"	10'-2"	5'-10"
42"	4'-10"	10'-2"	6'-6"
48"	5'-8"	10'-2"	7'-1"
54"	5'-8"	10'-2"	7'-1"
60"	5'-8"	10'-2"	7'-1"
72"	5'-8"	10'-2"	7'-1"

					DATE	DEPARTMENT OF TRANSPORTATION STATE OF GEORGIA
					REVISION	STANDARD NARROW MEDIAN INLET INLET BOX AND REDUCER SLAB DETAILS
						NO SCALE — APRIL 2020
					BY	DES. JAHR DRW. JAHR TRA. ____ CHK. ____

(SUBMITTED) T. Christopher Rudd
STATE DESIGN POLICY ENGR.
(APPROVED) Margaret B. Pickett
CHIEF ENGINEER

NUMBER 5001-N

GDOT Georgia Department of Transportation | P. I. No.

REBAR DETAILS AND BAR SCHEDULE FOR COLLAR AND MODIFIED BARRIERS

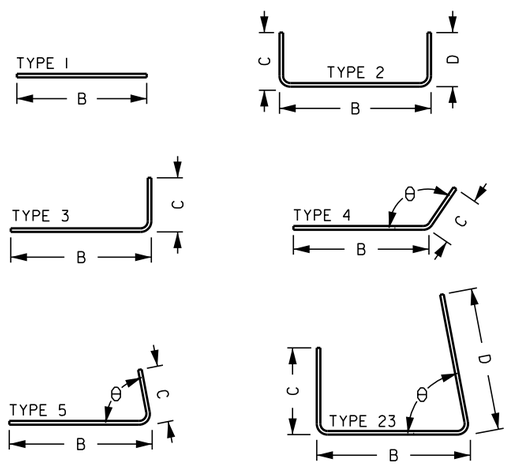

NOTE: REBAR DIMENSIONS AND BENDING FOLLOW GA STANDARD 3901

REBAR SCHEDULE:			DIMENSIONS:				PAGE
NUMBER	SIZE	TYPE	B	C	D	θ	
4H01	#4	1	2'-0"	-	-	-	1B
4L01	#4	3	9"	8"	-	-	1A, 1C, 1D
4L02	#4	3	2'-3"	8"	-	-	1E
4L03	#4	3	3'-11¾"	8"	-	-	1E
4U01	#4	2	2'-9"	8"	8"	-	1A, 1B, 1C, 1D, 1E
4U02	#4	2	5'-11"	8"	8"	-	1A, 1B, 1C, 1D, 1E
4U03	#4	2	5'-0"	8"	8"	-	1A, 1C, 1D, 1E
4U04	#4	2	5'-0"	2'-9"	2'-9"	-	1A, 1B, 1C, 1D, 1E
4U05	#4	2	2'-9"	1'-8"	1'-8"	-	1A, 1C, 1D
4U06	#4	2	6'-0"	1'-8"	1'-8"	-	1B, 1E
4VXX	#4	1	VAR	-	-	-	1E
4V00	#4	1	1'-10"	-	-	-	1A, 1B, 1C, 1D, 1E
4V01	#4	1	1'-1¾"	-	-	-	1A, 1B, 1C, 1D, 1E
4V02	#4	1	11¼"	-	-	-	1A, 1B, 1C, 1D, 1E
4V03	#4	1	6"	-	-	-	1A, 1B, 1C, 1D, 1E
5G01	#5	23	1'-4"	1'-0"	3'-4⅜"	79°	1A, 1C, 1D
5HXX	#5	1	VAR	-	-	-	5
5J01	#5	4	3'-4"	1'-0"	-	169°	1C, 1D, 1E
5J02	#5	4	VAR	1'-6"	-	169°	1D
5J03	#5	4	3'-6"	9¾"	-	79°	1C
5L01	#5	3	3'-0"	1'-0"	-	-	1A, 1B, 1C, 1D, 1E
5L02	#5	3	VAR	9¾"	-	-	1E
5U07	#5	2	10"	8"	8"	-	1B
5U08	#5	2	1'-4"	VAR	8"	-	1C
5U09	#5	2	9½"	VAR	8"	-	1E

GRATE DETAILS

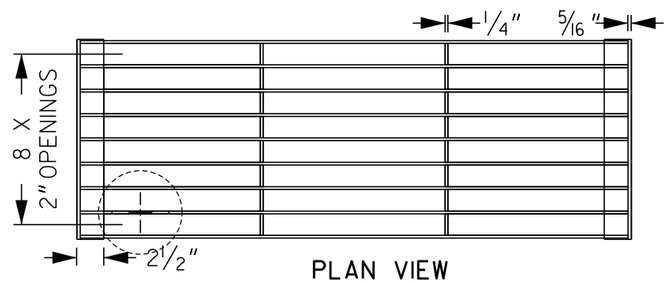

PLAN VIEW

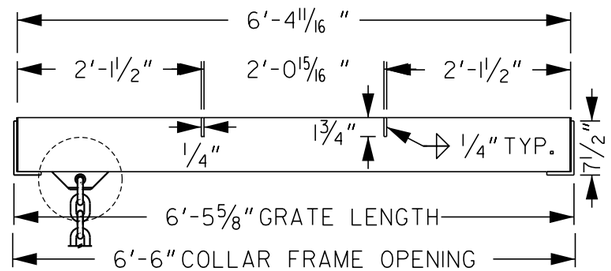

ELEVATION VIEW

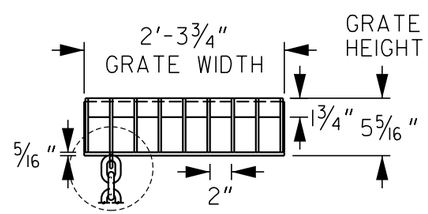

SIDE VIEW

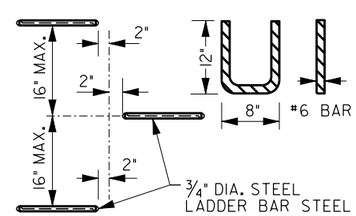

STEEL LADDER BAR STEPS

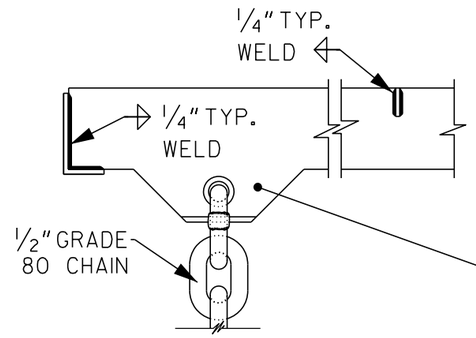

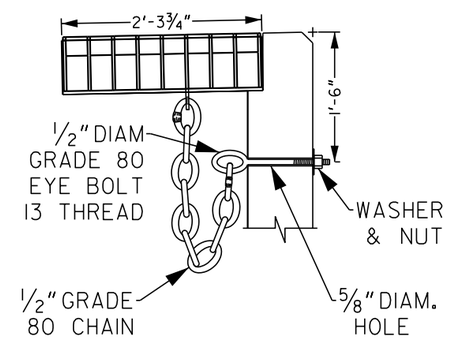

SAFETY CHAIN DETAIL

FRONT DETAIL

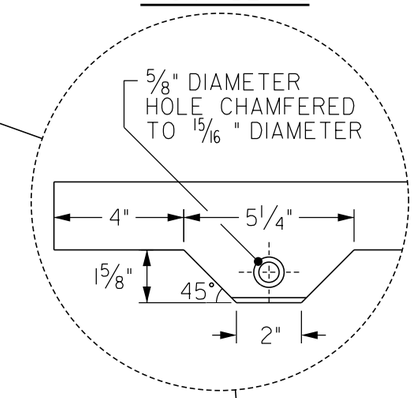

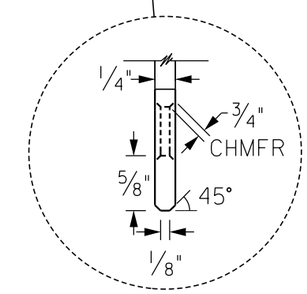

SIDE DETAIL

NOTE:
BOTH THE GRATE AND THE FRAME SHALL BE EITHER ASTM A-36 STEEL (HOT-DIPPED GALVANIZED, MEETING ASTM SPECIFICATION A-123) OR ASTM A-588 STEEL (NOT GALVANIZED). FOR A-36 STEEL, AFTER FABRICATION, DRILL A 1#4"DIA HOLE IN ONE FRAME CORNER TO PREVENT BUILD-UP OF GALVANIZING MATERIAL.

NOTES:
STEPS ARE REQ'D ON ALL STRUCTURES WHERE H IS GREATER THAN 4'-0". AN ALTERNATE STEP MAY BE SUBSTITUTED IF APPROVED BY THE GA D.O.T. OFFICE OF MATERIALS AND TESTING.

REVISION	DATE	DEPARTMENT OF TRANSPORTATION STATE OF GEORGIA
		STANDARD NARROW MEDIAN INLET REBAR SCHEDULE, GRATE, SAFETY CHAIN AND STEEL LADDER BAR STEPS DETAILS
		NO SCALE — APRIL 2020
BY	DES. JAHR DRW. JAHR TRA. ____ CHK. ____	(SUBMITTED) R Christopher Rudd — STATE DESIGN POLICY ENGR. (APPROVED) Margaret B Pierce — CHIEF ENGINEER

NUMBER 5001-N
4 OF 5

GDOT Georgia Department of Transportation | P. I. No.

THROAT DETAIL (PLAN VIEW)

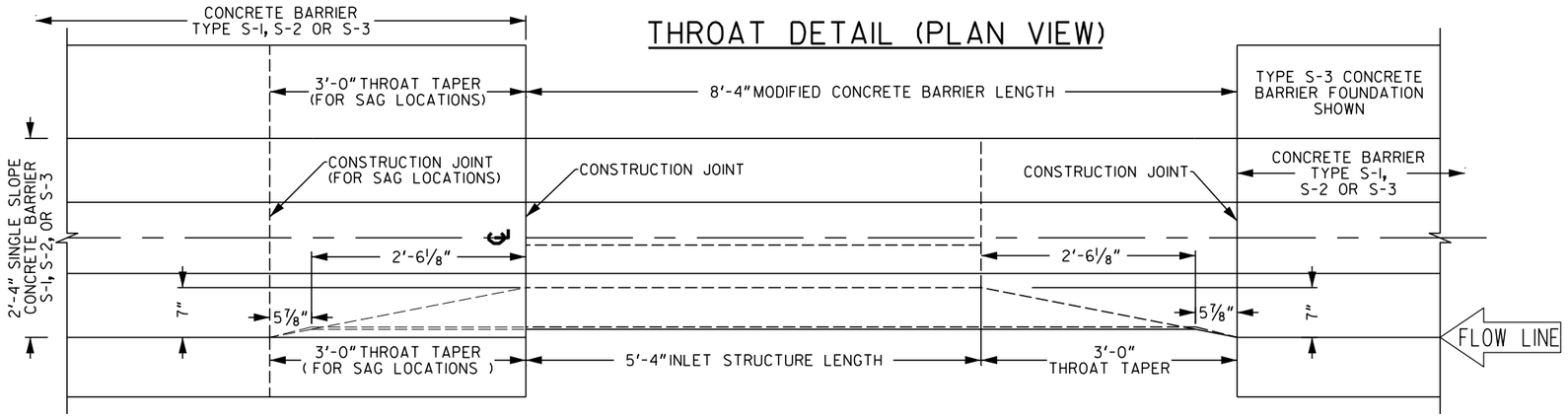

THROAT DETAIL (ELEVATION VIEW)

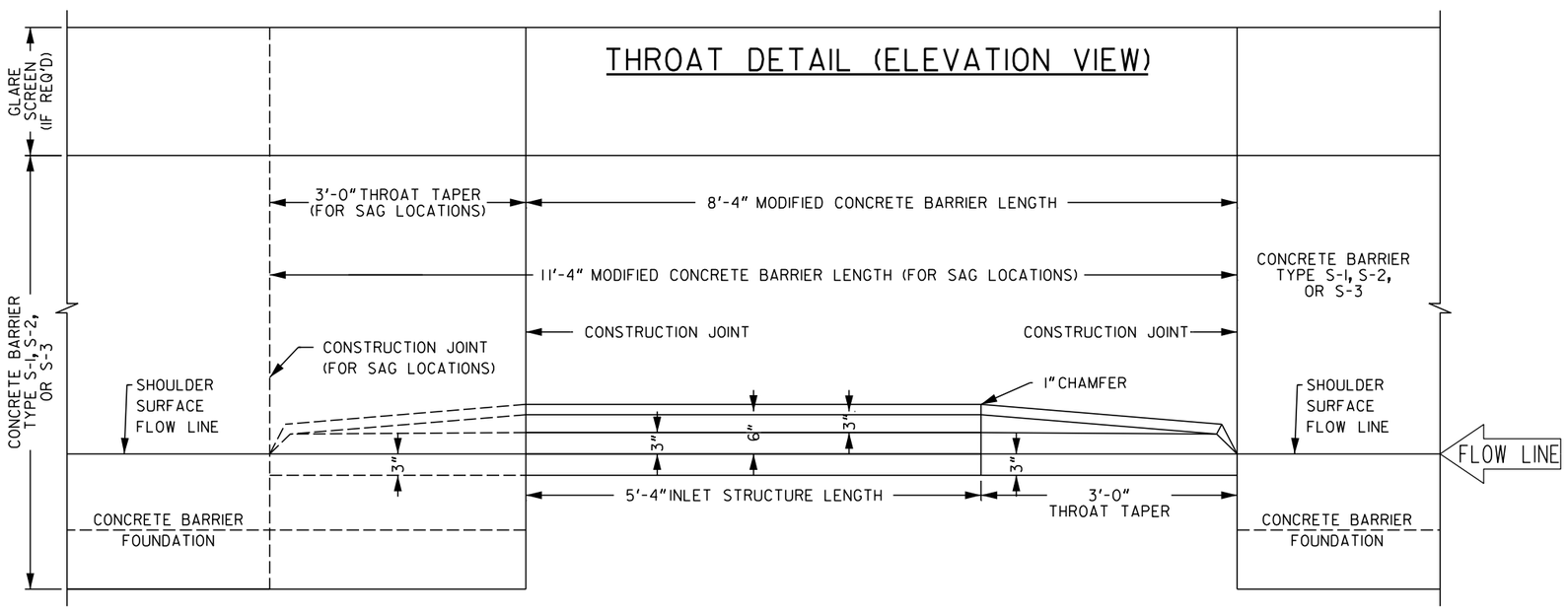

LONGITUDINAL REINFORCEMENT DETAIL

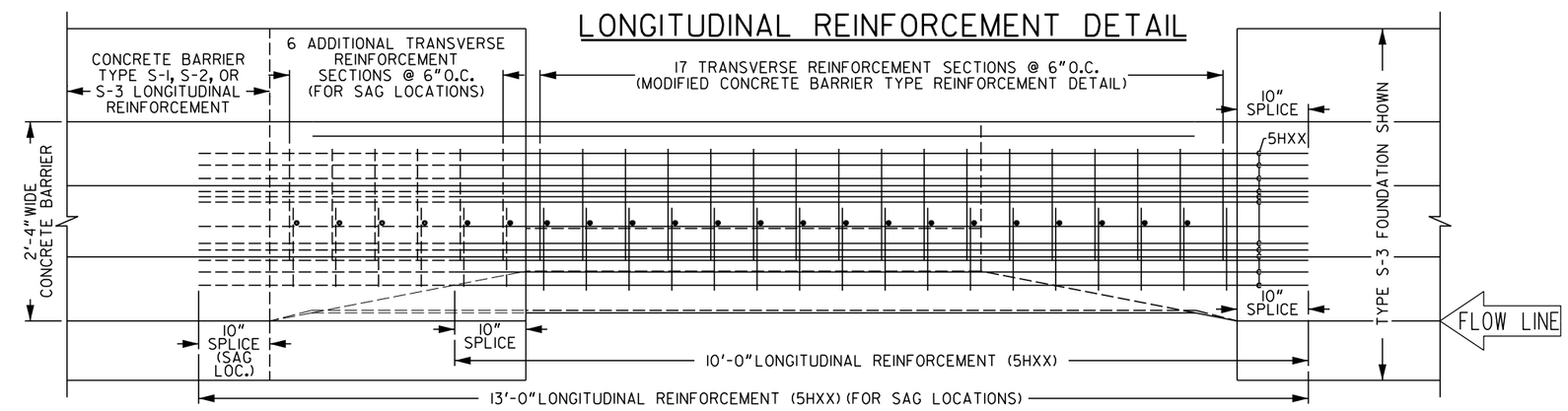

GENERAL NOTES:

1. SPECIFICATION: GEORGIA STANDARD CURRENT EDITION, AND SUPPLEMENTS THERETO.
2. STANDARD 5001-N INLET GRATES ARE FOR USE ONLY ON LIMITED ACCESS TYPE FACILITIES, WHERE BICYCLES AND SCOOTERS ARE PROHIBITED.
3. INLETS SHALL BE DESIGNATED AS GROUP I (SEC. 668)
4. INVERTS AND PIPES SHOWN ARE ILLUSTRATIVE. SEE PLANS FOR SPECIFICS. INVERTS SHALL BE FORMED WITH GROUT OR CONCRETE AS SHOWN IN THE PLANS OR AS DIRECTED BY THE ENGINEER.
5. FOR CONCRETE BARRIER DETAILS NOT SHOWN, SEE SEPARATE STANDARDS OR PLAN DETAILS. IF THE ROADWAY BARRIER HAS REINFORCING STEEL, THE REINFORCEMENT SHALL BE CONTINUED IN BARRIER SECTION ACROSS THE INLET. ADDITIONAL REINFORCING REQUIRED WHERE SHOWN.
6. FOR USE ONLY ADJACENT TO CONCRETE BARRIER; IN SHOULDERS 2'-0" TO 4'-6" WIDE. OTHERWISE, 5001M SHALL BE USED.
7. IF THE BASE OF THE INLET STRUCTURE CONFLICTS WITH AN EXISTING BARRIER (OR WALL) FOOTING, THE FOOTING MAY BE NOTCHED OUT AS SMALL AS POSSIBLE TO FIT THE STRUCTURE. IF AN EXISTING FOOTING OR TRAVEL LANES PREVENT NORMAL LOCATION OF LONGITUDINAL PIPES, AND IF HYDRAULICS AND BRIDGE APPROVE FOR DRAINAGE AND STRUCTURAL INTEGRITY RESPECTIVELY, A CLASS 5 LONGITUDINAL PIPE MAY BE LOCATED UNDER A NEW RECONSTRUCTED BARRIER (OR WALL) FOR THE CONFLICTING LENGTH WITH THE USE OF A DROP STRUCTURE. THE DROPPED PIPE SHALL MEET WITH THE DOWNSTREAM DESIGN PIPE, MAINTAINIG A MINIMUM VELOCITY OF 3 FT/S, A MINIMUM CLEARANCE OF 1 FT FROM THE BASE OF THE FOOTING TO THE TOP OF THE PIPE, AND CONNECTING TO A SECOND DROP INLET (OR MANHOLE) WHERE THE INVERTS OF THE DESIGN PIPE AND THE DROP PIPE MATCH, OR AT 500 FT OR 300 FT FOR STRAIGHT OR CURVED RUNS RESPECTIVELY; WHICH EVER IS THE SHORTEST RUN.
8. DRAINAGE STRUCTURE NOT TO BE PLACED WITHIN TRAVEL LANES.
9. ALL COLLAR AND BOX REINFORCEMENT SHALL HAVE MINIMUM 2" CLEARANCES FROM ALL EXTERIOR AND INTERIOR FACES.
10. ALL MODIFIED BARRIER REINFORCEMENT SHALL HAVE MINIMUM 3" CLEARANCES FROM ALL FACES.
11. ALL MODIFIED CONCRETE BARRIER WILL BE PAID FOR UNDER THE SAME ITEM AS THE EXISTING OR PROPOSED CONCRETE BARRIER TYPE IT REPLACES.

					DATE	DEPARTMENT OF TRANSPORTATION STATE OF GEORGIA
					REVISION	STANDARD NARROW MEDIAN INLET GENERAL NOTES, MODIFIED BARRIER THROAT AND LONGITUDINAL REINFORCEMENT DETAILS
						NO SCALE — APRIL 2020
					BY	DES. JAHR (SUBMITTED) R. Christopher Rudd STATE DESIGN POLICY ENGR. DRW. JAHR TRA. ____ (APPROVED) Margaret B. Pitts CHIEF ENGINEER CHK. ____
						NUMBER 5001-N 5 OF 5