STATE	PROJECT NUMBER	SHEET NO.	TOTAL SHEETS
GA.	STP00-7063-00(001)	926	1577

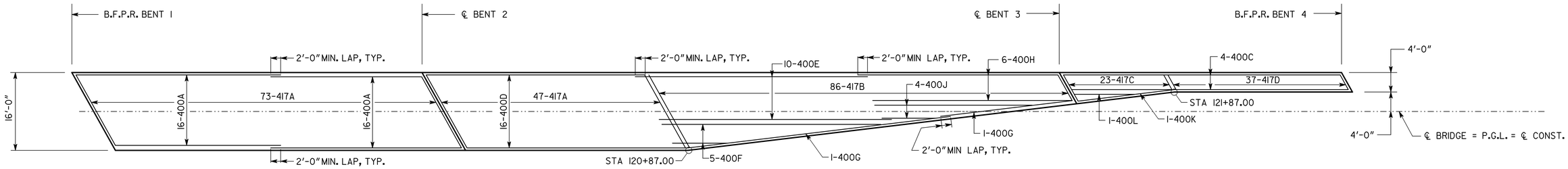

MEDIAN PLAN

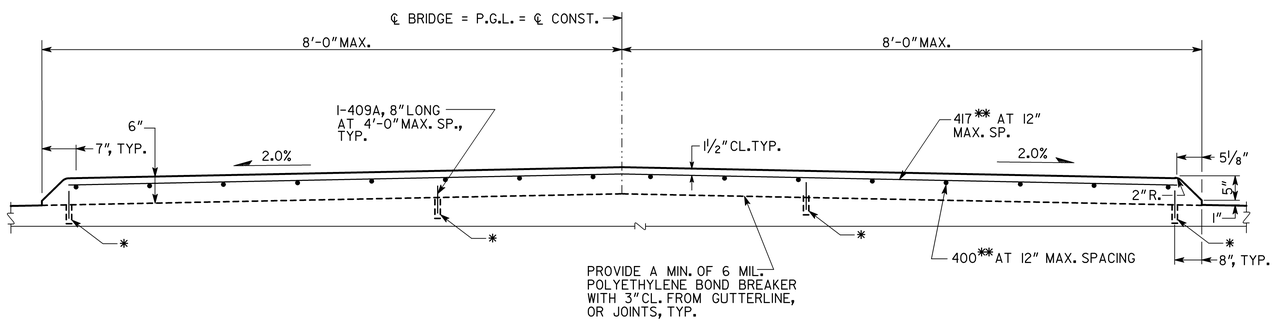

16'-0" WIDE SECTION

SPANS 1 AND 2

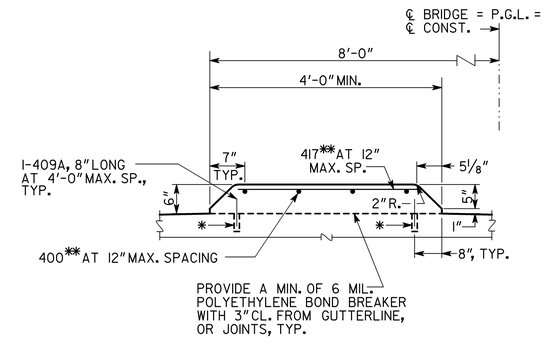

4'-0" WIDE SECTION

SPAN 3

MEDIAN DETAILS

WIDTH VARIES FROM 4'-0" TO 16'-0"

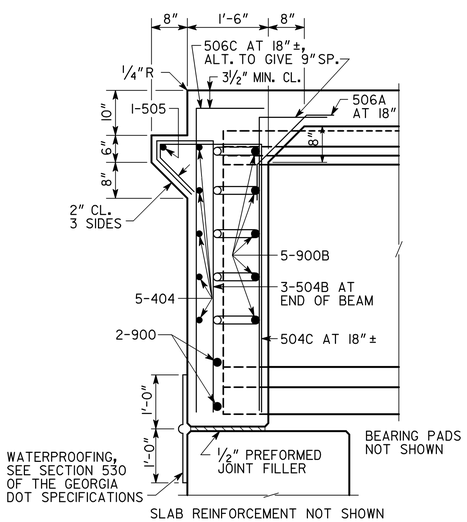

SECTION AT ENDWALL

BENT 1, 63 IN. BULB TEE

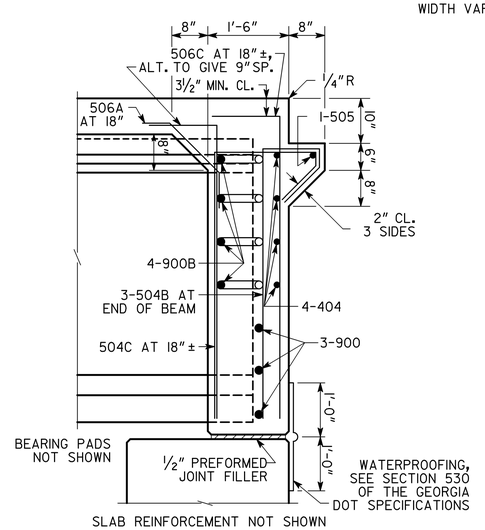

SECTION AT ENDWALL

BENT 4, 63 IN. BULB TEE

NOTES:

1. MAINTAIN 2" MINIMUM CLEARANCE ON ALL REINFORCEMENT UNLESS OTHERWISE NOTED.
2. PLACE TRANSVERSE MARKINGS SPACED AT 5'-0" ±.
3. COST OF BOND BREAKER AND EPOXY ADHESIVE TO BE BE INCLUDED IN PRICE BID FOR SUPERSTRUCTURE ITEMS.

* DRILL ¾" DIAMETER HOLES, 4" DEEP FOR DOWEL BARS. ¾" DIAMETER HOLES SHALL BE FILLED WITH EPOXY ADHESIVE AFTER BARS ARE INSERTED, TYP.

** SEE MEDIAN PLAN FOR NUMBER OF BARS AND LETTER DESIGNATION.

BRIDGE NO. 1

GEORGIA

DEPARTMENT OF TRANSPORTATION

ENGINEERING DIVISION-OFFICE OF BRIDGES AND STRUCTURES

MISCELLANEOUS DETAILS
CR 145 (RIVERWATCH PARKWAY EXTENSION)
OVER CSX TRANSPORTATION

COLUMBIA COUNTY STP00-7063-00(00)

NO SCALE SEPTEMBER 2012

DRAWING NO. 35-008

BRIDGE SHEET 8 OF 24

BY	REVISIONS	DATE

DESIGNED SKG | CHECKED JTM | REVIEWED DLC/WMD
DRAWN RGE | DESIGN GROUP SKG | APPROVED BFR

1 INCH WHEN PRINTED FULL SIZE

BR250470.DGN

C:\br250470\CR145overCSX.dgn 3:52:59 PM 9/27/2012