STATE	PROJECT NUMBER	SHEET NO.	TOTAL SHEETS
GA.	F013-1(37)	123	234

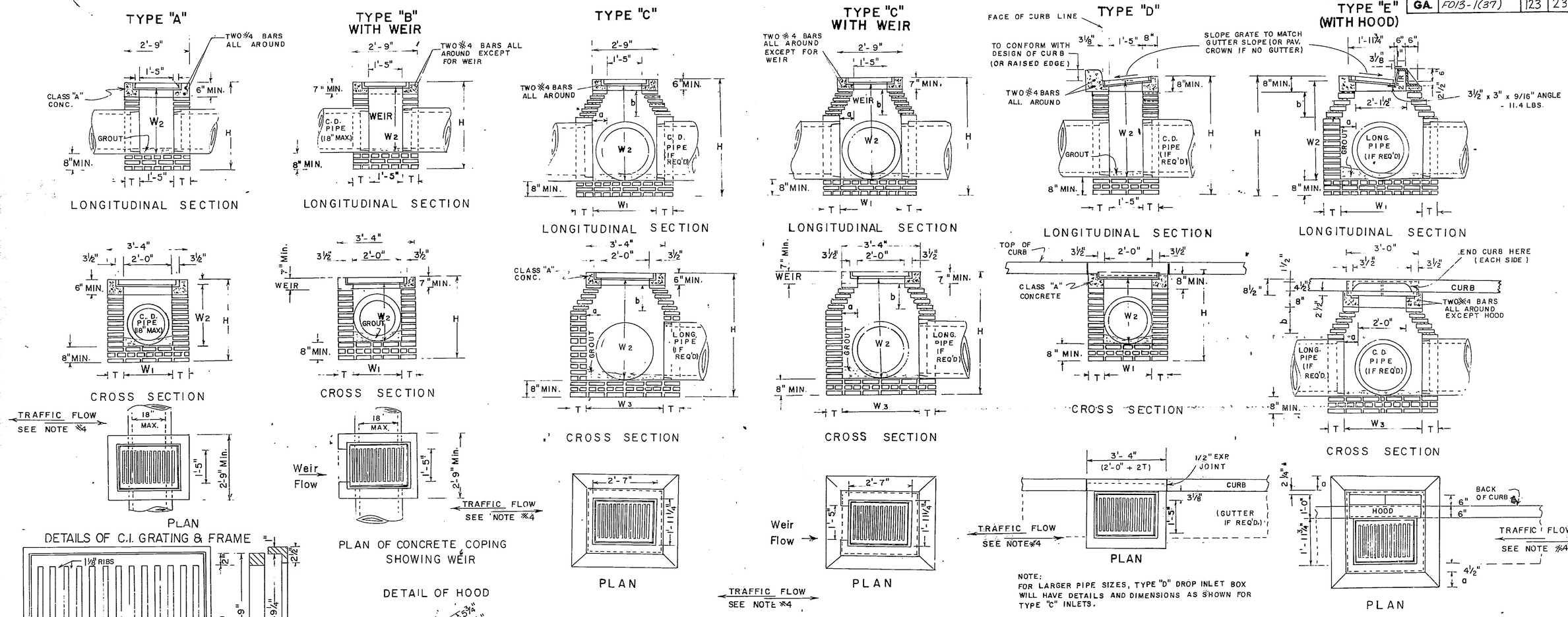

NOTE:
FOR LARGER PIPE SIZES, TYPE "D" DROP INLET BOX WILL HAVE DETAILS AND DIMENSIONS AS SHOWN FOR TYPE "C" INLETS.

NOTE:
MINIMUM DIMENSIONS GIVEN IN TABLE BELOW ARE BASED UPON TYPICAL OUTSIDE DIAMETERS OF CONCRETE PIPES WITH NORMAL COVER AND CLEARANCES. THESE DIMENSIONS MAY BE MODIFIED IF SO DETAILED IN THE PLANS OR AS DIRECTED BY THE ENGINEER. DIMENSIONS GIVEN ARE MINIMUM EXCEPT FOR "a" WHICH IS MAXIMUM.

ALTERNATE BOTTOM SLAB CONSTRUCTION AT OUTLET

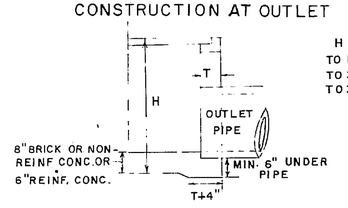

BRICK WALL THICKNESSES
(FOR ALL TYPE INLETS)

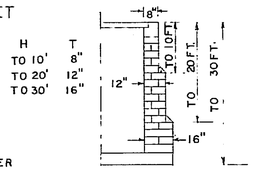

NOTE:
DETAILS NOT SHOWN FOR CONSTRUCTION ALTERNATES WILL BE SIMILAR TO THAT SHOWN FOR BRICK MASONRY.

CONSTRUCTION ALTERNATES

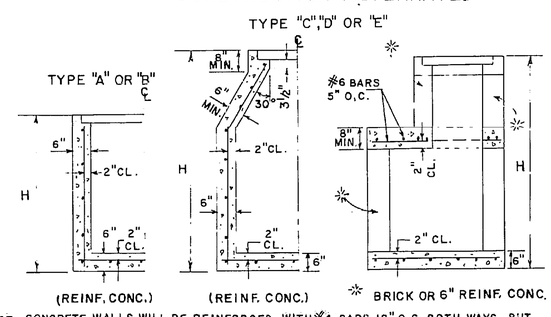

NOTE: CONCRETE WALLS WILL BE REINFORCED WITH #4 BARS 12" O.C. BOTH WAYS, BUT WHERE H IS OVER 9 FT., AND PIPE IS OVER 30" I.D., THE HORIZONTAL STEEL, WHICH IS MORE THAN 9 FT. DEEP WILL BE INCREASED TO 6" SPACINGS. 6" CONC. BOTTOM SLABS WILL BE REINFORCED WITH #4 BARS 12" O.C. BOTH WAYS.

NOTE: FOR PRECAST ALTERNATES, SEE STD. 1019-A PRECAST AND/OR STD. 1040. PRECAST AND BUILT-IN-PLACE COMPONENTS MAY BE USED IN COMBINATIONS WHICH PROVIDE PROPER FITS AND STRUCTURAL ADEQUACY.

GENERAL NOTES:

1. SPECIFICATIONS: GEORGIA STANDARD AND/OR SPECIAL PROVISIONS.
2. 1/2" EXPANSION JOINTS WILL BE REQUIRED WHERE RIGID PAVEMENT, CONCRETE SIDEWALK OR CONCRETE GUTTER MEETS DROP INLETS.
3. ALIGNMENT, NUMBER AND SIZES OF PIPES SHOWN ARE ONLY TYPICAL. SEE PLANS FOR ACTUAL PIPE CULVERT REQUIREMENTS.
4. ALL TYPE DROP INLETS WILL BE CONSTRUCTED (AS SHOWN), SO THAT THE THE GRATE BARS ARE PERPENDICULAR TO THE FLOW OF TRAFFIC EXCEPT ON LIMITED ACCESS PROJECTS OR WHERE BICYCLES ARE PROHIBITED.
5. BRICK MASONRY WITH CLASS "A" CONC. TOP PORTION IS SHOWN AS STANDARD CONSTRUCTION WITH ALTERNATES PERMITTED AS SHOWN. BOTTOM SLAB MAY BE 8" MIN. NON-REINFORCED CONCRETE, 8" BRICK OR 6" MIN. REINFORCED CONCRETE. SEE APPLICABLE STANDARDS FOR ALTERNATE PRECAST CONSTRUCTION.

TABLE OF MINIMUM DIMENSIONS FOR DROP INLETS

D	TYPES "A" or "B" BRICK OR REINF. CONC			TYPE "C" OR "D" (BRICK)						TYPE "E" (BRICK)						TYPE "C", "D" OR "E" (REINFORCED CONCRETE)						
	W_1	W_2	H(MIN.)	W_1	W_2	W_3	a (max.)	b	H(MIN.)	W_1	W_2	W_3	a (max.)	b	H(MIN.)	W_1 TYPE "C"	W_1 TYPE "E"	W_2	W_3	a (max.)	b	H (MIN.)
15"	2'-0"	2'-7"	3'-3 1/2"	2'-2 1/8"	2'-11"	2'-9 1/4"	0'-4 9/16"	0'-7 7/8"	3'-9 1/2"	3'-2 1/8"	3'-1"	3'-0 7/8"	0'-7 7/16"	1'-1 1/8"	3'-11 1/2"	2'-0"	2'-1"	2'-7"	2'-0"	3 1/2"	6"	3'-6"
18"	2'-0"	2'-10"	3'-7"	2'-2 1/8"	3'-2 1/2"	2'-9 1/8"	0'-4 9/16"	0'-7 7/8"	4'-1"	3'-2 1/8"	3'-4 1/2"	3'-0 7/8"	0'-7 7/16"	1'-1 1/8"	4'-1"	2'-0"	2'-1"	3'-0"	2'-0"	3 1/2"	6"	3'-11"
24"	~	~	~	2'-8 1/8"	3'-3 1/8"	3'-3 1/8"	0'-7 7/16"	1'-1 1/8"	4'-9"	3'-2 1/8"	3'-11 1/2"	3'-0 7/8"	0'-7 9/16"	1'-1 1/8"	4'-8 1/4"	2'-8"	2'-9"	3'-8"	2'-6"	6 1/2"	11 1/4"	4'-7"
30"	~	~	~	3'-7 1/4"	4'-0 1/4"	3'-10 1/16"	1'-0 1/8"	1'-9"	5'-10"	3'-5 1/2"	4'-8 3/8"	3'-4"	0'-8"	1'-1 7/8"	5'-6 7/8"	3'-4"	3'-6"	4'-9"	3'-0"	9 1/2"	16 1/2	5'-10"
36"	~	~	~	4'-1 7/8"	6'-0 7/8"	4'-8 7/8"	1'-4 7/16"	2'-2 1/4"	6'-11 1/8"	3'-11 1/2"	5'-8 9/16"	3'-10"	0'-11"	1'-7 11/16"	6'-7 11/16"	3'-10"	4'-0"	5'-10"	3'-9"	1'-2"	2'-0"	6'-10"
42"	~	~	~	4'-5"	7'-1 7/8"	5'-0"	1'-6"	2'-7 9/16"	8'-0 1/4"	4'-6 1/2"	7'-5 11/16"	4'-5"	1'-2 1/2"	2'-1 11/16"	9'-4 3/16"	4'-5"	4'-6"	7'-0"	4'-3"	1'-5"	2'-5 1/2"	7'-11"
48"	~	~	~	5'-0"	8'-2 3/4"	5'-7"	1'-9 1/2"	3'-1 1/4"	9'-1 1/4"	5'-1 1/2"	8'-6 11/16"	5'-0"	1'-6"	2'-7 3/16"	9'-5 3/16"	5'-0"	5'-0"	8-2"	5'-0"	1'-9 1/2"	3'-1 1/2"	9'-2"
54"	~	~	~	5'-7"	9'-4"	6'-2"	2'-1"	3'-7 1/2"	10'-2 1/2"	5'-8 1/2"	9'-7 3/8"	5'-7"	1'-9 1/2"	3'-1 1/4"	10'-6 1/4"	5'-6"	5'-6"	9'-2"	5'-6"	2'-0 1/2"	3'-6 1/2"	10'-0"
60"	~	~	~	6'-2"	10'-4 7/8"	6'-9"	2'-4 1/2"	4'-1 7/8"	11'-3 1/4"	6'-3 1/2"	10'-8 7/16"	6'-2"	2'-1"	3'-7 7/16"	11'-7 7/16"	6'-0"	6'-0"	10'-3"	6'-0"	2'-3 1/2"	4'-0"	11'-1"

DEPARTMENT OF TRANSPORTATION.
STATE OF GEORGIA

STANDARD DROP INLETS
(BUILT-IN-PLACE)

NO SCALE — REV. & REDR. APRIL, 1981

DES. 12-51
REV R.M.U.
TRA. G.M.E.
CHK. R.K.C.

(SUBMITTED) Floyd E. Hardy
STATE ROAD & AIRPORT DESIGN ENGR.
(APPROVED) Thomas D. Moreland
STATE HIGHWAY ENGINEER

NUMBER 1019A