DEPARTMENT OF TRANSPORTATION
STATE OF GEORGIA
PROJECT CONCEPT REPORT

Project Type:	Interchange Reconstruction	P.I. Number:	0002868
GDOT District:	Seven	County:	DeKalb
Federal Route Number:	I-20	County Rd Number:	5150
		Project Number:	NHS00-0002-00-(868)

Operational Improvements at I-20 and CR5150/Panola Road interchange.

Submitted for approval:

Shamir Poudel, P.E.	ARCADIS U.S., Inc.	DATE
Albert Shelby, III	Office of Program Delivery	DATE
Vinesha Pegram, P.E.	GDOT Project Manger	DATE

Recommendation for approval:

Program Control Administrator	DATE
State Environmental Administrator	DATE
State Traffic Engineer	DATE
Project Review Engineer	DATE
State Utilities Engineer	DATE
District Engineer	DATE
State Bridge Design Engineer	DATE
State Transportation Financial Management Administrator	DATE

The concept as presented herein and submitted for approval is consistent with that which is included in the Regional Transportation Plan (RTP) and/or the State Transportation Improvement Program (STIP).

State Transportation Planning Administrator	DATE

PROJECT LOCATION

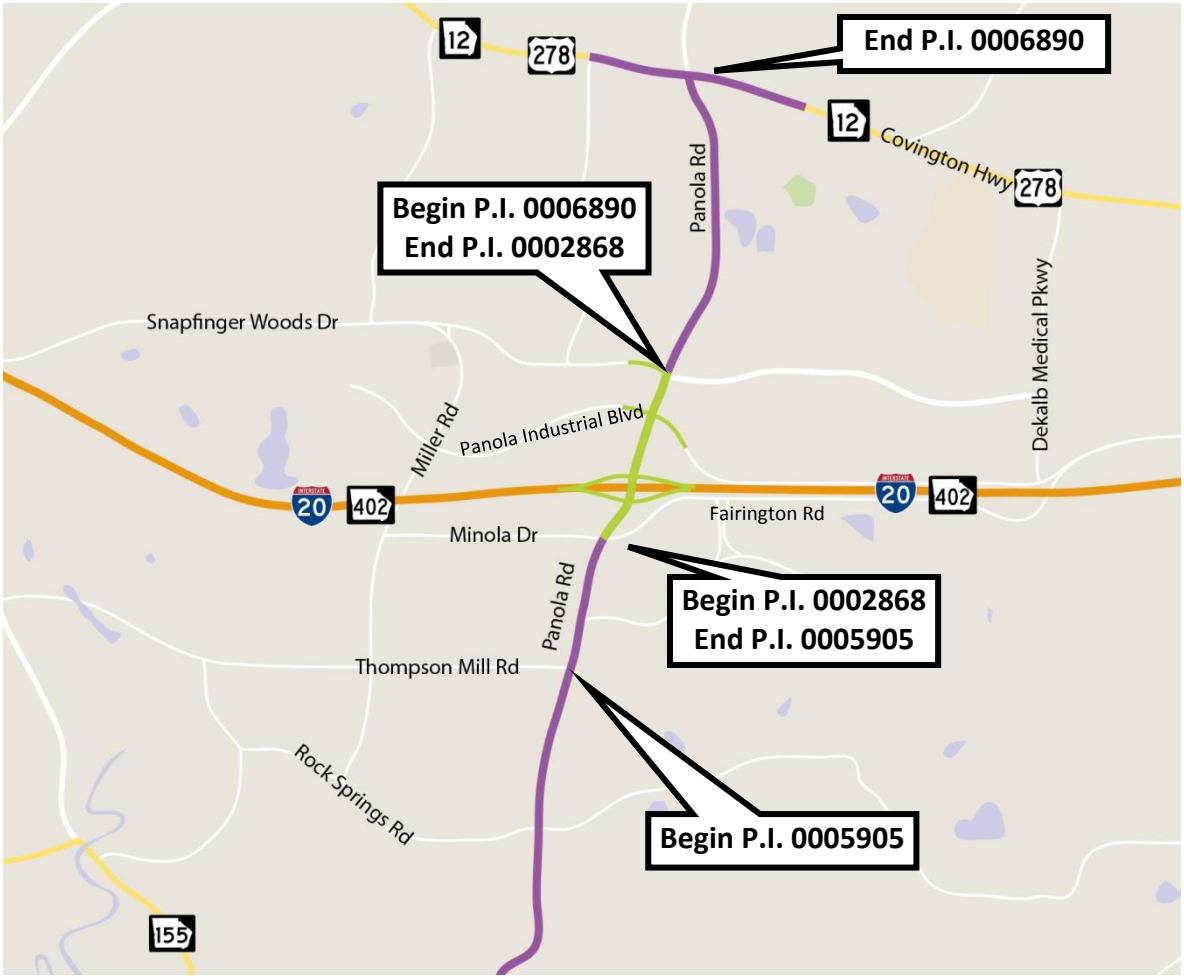

Not to Scale

PLANNING & BACKGROUND DATA

Project Justification Statement:

CR5150/Panola Road is an urban minor arterial street located within Atlanta Regional Commission's (ARC's) Atlanta metropolitan planning region. Panola Road serves as a major north-south corridor in DeKalb County, providing important access to Interstate 20 (I-20). Currently, Panola Road is a four-lane road with a two-way left-turn lane at the center. At the I-20 interchange bridge, Panola Road consists of seven lanes: two through lanes in each direction, two northbound left-turn lanes onto I-20 westbound, and one southbound left-turn lane onto I-20 eastbound. Curb and gutter and a 5-foot sidewalk exist on the western side of the bridge.

In the vicinity of the I-20 interchange, current year (2014) average daily traffic is 41,960 vehicles per day (vpd), which is projected to increase to 45,880 vpd by 2020 and to 61,780 vpd by 2040 under no-build conditions. This increase in traffic is projected to worsen traffic operations in the interchange area. One of the seven side street intersections with Panola Road in the vicinity of the interchange currently experience operational deficiencies (level of service [LOS] E or F); the I-20 ramp termini at Panola Road currently operate at LOS D or better. By the year (2030), three of the seven intersections with Panola Road within the study limits (between Fairington Road to the south and Snapfinger Woods Drive to the north), including the I-20 ramp termini, are projected to operate at LOS E or worse without improvements.

The crash and injury rates along this portion of Panola Road are significantly higher than the statewide averages for similar facilities. Based on the latest five years (2005 through 2009) of Georgia Department of Transportation (DOT) crash data, crash rates along Panola Road in this area range from two to six times the statewide averages for similar facilities, and injury rates range from two to nine times statewide averages. Crash data is provided in Attachment 4. Of the crashes that occurred during these years, more than 80 percent were rear-end or angle crashes, which are typically attributed to congestion and lack of physical separation between two directions of travel. Panola Road does not have access control in the interchange area and there are multiple driveways within proximity of the I-20 ramps. This lack of access control contributes to congestion and increased turning movements in this area.

Panola Road is used by pedestrians, as well as vehicles. Although there are sidewalks on both sides of the road leading up to the I-20 interchange, there is only a sidewalk on the western side of the road on the bridge over I-20 due to lack of space. A Georgia Regional Transportation Authority (GRTA) park and ride lot, serviced by Express buses, is located at the southwest quadrant of the interchange and increases pedestrian demand in this area. Additionally, several businesses that generate pedestrian traffic, including restaurants and hotels, are located in the vicinity of the interchange. No bike lanes currently exist along the corridor, but Panola Road is identified as a bike corridor in the 2007 DeKalb County Comprehensive Transportation Plan.

The goals of Georgia DOT PI No. 0002868 (ARC Project No. DK-AR-242) are to alleviate present and future traffic congestion by improving the operations of the interchange, reduce the crash frequency at the interchange and promote multi-modal use along Panola Road.

Description of the proposed project:

The Panola Road Bridge over I-20 will be retained to be used as part of the proposed operational improvements to the I-20 Interchange by converting it to a Diverging Diamond Interchange (DDI). The proposed typical section across the bridge would consist of six 11-foot lanes, with two through lanes and one exclusive right-turn lane in each direction, separated by a 10-foot raised median. The center median on the bridge would be used as a shared bike and pedestrian path for travel through the DDI. A DDI configuration will allow the design to utilize the existing bridge and to retain portion of the existing ramp in order to minimize construction cost and right of way impacts to adjoining businesses.

The Panola Road typical section south of the bridge will consist of five 12-foot lanes (three through lanes northbound and two through lanes southbound). Panola Road southbound in this area will require a separate 12-foot right-turn lane and 12-foot double left-turn lanes at the Fairington Road/Minola Road intersection. The Panola Road typical section north of the bridge will consist of five 12-foot lanes (three through lanes southbound and two through lanes northbound). Panola Road northbound in this area will require 12-foot double left-turn lanes and a separate 12-foot right-turn lane at the Panola Industrial Boulevard/Hillandale Drive intersection. North and south of the I-20 bridge, Panola Road will have a variable 8- to 20-foot raised center median, 4-foot bike lanes, and a 12-foot urban shoulder with 5-foot sidewalks on both sides of the road.

The proposed improvements would also include:

- widening of the Fairington Road approach to Panola Road to accommodate two left-turn, one through and two right-turn lanes onto Panola Road;
- widening of the Minola Road approach to Panola Road to accommodate one left-turn, one through and one shared through/right-turn lane onto Panola Road;
- widening the Hillandale Road approach to Panola Road to allow for two left-turn, one through and one right-turn lanes on to Panola Road; and
- widening the Panola Industrial Boulevard approach to Panola Road to allow for one left-turn lane, one through lane and two right-turn lanes onto Panola Road.

The proposed improvements will tie to the existing Snapfinger Woods intersection at the southern approach of the intersection.

The Hillandale Park Court and Snapfinger Park Drive intersections with Panola Road would become right-in, right-out intersections as part of the project. A two-lane (one lane in each direction) access road would be constructed between Snapfinger Park Drive and Panola Industrial Boulevard paralleling Panola Road on the west side to allow for full, signalized access to the businesses on Snapfinger Park Drive. Access to the Park and Ride lot from Panola Road will be converted to a right-in only driveway; full access to the Park and Ride Lot will still be available from Minola Drive.

This project is being designed so as not to preclude other planned operational improvements along Panola Road extending from SR 155/Snapfinger Road in the south to SR 12/Covington Highway to the north.

Federal Oversight: ☐ Full Oversight ☒ Exempt ☐ State Funded ☐ Other

MPO: Atlanta Regional Commission (ARC) MPO Project ID: DK-AR-242

Regional Commission: Atlanta Regional Commission RC Project ID

Congressional District(s): 4

Projected Traffic: ADT
Current Year (2014): 41,960 vpd; Open Year (2020) 45,880 vpd; Design Year (2040): 61,780 vpd
Traffic Projections Performed by: ARCADIS

Functional Classification (Mainline): Urban Minor Arterial Street

Is this a 3R (Resurfacing, Restoration, & Rehabilitation) Project? ☒ No ☐ Yes

Pavement Evaluation and Recommendations

Preliminary Pavement Evaluation Summary Report Required?	☐ No	☒ Yes
Preliminary Pavement Type Selection Report Required?	☐ No	☒ Yes
Feasible Pavement Alternatives: ☐ HMA	☐ PCC	☒ HMA & PCC

CONTEXT SENSITIVE SOLUTIONS

Issues of Concern:

Impacts to Adjoining Businesses

Panola Road within the project limits is bounded by commercial development and parking lots for these developments. Widening of Panola Road will impact improvements on these developments.

Driver Expectancy

The DDI is still a relatively new concept, which hasn't been widely implemented in Georgia. As a result, drivers along this corridor may not have encountered this type of interchange configuration before. To improve driver expectancy and minimize confusion within the interchange, the following mitigation strategies are recommended to combat several design elements that may not meet driver expectancy along this corridor. The design speed along Panola Road, functionally classified as an Urban Minor Arterial Street, is 45mph. The proposed project will reconstruct the existing conventional diamond interchange to a DDI. The major controlling element of a DDI is the design speed of the horizontal alignment (e.g., crossover movements). The crossover movements associated with the proposed project have been designed to meet a 25 mph speed design. The placement of the crossovers is largely dependent on the spacing and location of the Interstate Interchange Ramps (i.e., intersections spaced closely together will result in lower horizontal curve radii). Because of geometric constraints the proposed design will use crossing angles of 30 degrees at the DDI intersections, which are less the desirable design.

Context Sensitive Solutions:

Impacts to Adjoining Businesses

Design that uses 12-foot urban shoulders in lieu of 16-foot urban shoulders lessens impacts to existing commercial properties and saves project right-of-way cost.

Driver Expectancy

The horizontal alignment of the DDI consists of three main interacting elements: 1) crossing angle; 2) tangent length approaching and following the crossover; and 3) curve radii approaching and following the crossover.

1. Crossing Angle
    a. Potential mitigation strategies:
        i. Additional signage indicating "no right turn" or "no left turn" at crossover intersections to clarify permitted movements
        ii. Enhanced pavement markings, such as directional arrows on opposite sides of the intersections to guide traffic to the appropriate lanes.
        iii. Enhanced pavement markings, such as RPMs and "mini-skips" across intersections as guidance.
        iv. Additional intersection lighting for clarity during night-time operations.
        v. Upward-oriented "green arrow" on signal installations to indicates straight ahead movements.

2. Tangent Length
    a. Potential mitigation strategies:
        i. Additional signage indicating reverse curves.
        ii. Enhanced pavement markings such as RPMs for guidance

iii. Select curve radii such that normal crown can be maintained throughout based on design speed and low-speed super elevation criteria.

3. Curve Radii
   a. Potential mitigation strategies:
      i. Install speed reduction zone through the interchange to incrementally step the travel speed along Panola Road from 45 mph to 25 mph prior to traffic reaching the crossover movements at each ramp terminal.
      ii. Additional signage indicating reverse curves.
      iii. Enhanced pavement markings such as RPMs for guidance
      iv. Select curve radii such that normal crown can be maintained throughout based on design speed and low-speed super elevation criteria.

DESIGN AND STRUCTURAL DATA

Mainline Design Features: Panola Road at I-20 Interchange

Feature	Existing	Standard*	Proposed
Typical Section			
- **Number of Lanes – Panola Road**	**5**	**4**	**6**
- **Lane Width(s) – Panola Road**	**11'-12'+/-**	**11'-12'**	**11'-12'**
- **Lane Width(s) – Ramps**	*16' single lane, 12' multilane*	*16' single lane, 12' multilane*	*16' single lane, 12' multilane*
- **Median Width & Type – Panola Road**	**14' flush**	**20' raised curb**	**8-32' raised curb**
- **Outside Shoulder Width – Panola Road**	**12'+/-**	**12'-16' urban**	**12' urban**
- *Outside Shoulder Width – Ramps*	*N/A*	*12'/10' paved*	*12'/10' paved*
- **Outside Shoulder Slope – Panola Road**	**2% +/-**	**2%**	**2%**
Outside Shoulder Slope – Ramps pave/grass	*N/A*	*4%/6%*	*4%/6%*
- **Inside Shoulder Width – Panola Road**	**N/A**	**N/A**	**N/A**
- *Inside Shoulder Width – Ramps*	*N/A*	*8'/4' paved*	*8'/4' paved*
- **Sidewalks**	**4'-5'**	**5'**	**5'**
- **Bike Lanes – Panola Road**	**none**	**4'**	**4'**
Posted Speed (mph)	**45**		**25**
Design Speed (mph) – Panola Road	**45**	**45**	**45 (25 within DDI)**
Design Speed (mph) – Ramps	*N/A*	*35 min/60***	*35 min/60***
Min Horizontal Curve Radius – Panola Road	**580'+/-**	**711'**	**250'**
Min Horizontal Curve Radius – Ramps	*N/A*	*314'/1,200'***	*520'/1,200'***
Superelevation Rate – Panola Road	**4%+/-**	**4% max**	**2%**
Superelevation Rate – Ramps	*N/A*	*8% max*	*8% max*
Maximum Grade – Panola Road	**3.5% +/-**	**7%**	**3.75%**
Maximum Grade – Ramps	*N/A*	*5%*	*5%*
Access Control at Interchange	**Limited Access**	**Limited Access**	**Limited Access**

Access Control – outside interchange	**By Permit**	**By Permit**	**By Permit**
Right-of-Way Width – Panola Road (varies)	**110'-130'**	**N/A**	**150'-190'**
Design Vehicle – Panola Road	**WB-40**	**WB-40**	**WB-40**
Design Vehicle – Ramps	*N/A*	*WB-67*	*WB-67*

*According to current Georgia DOT design policy if applicable.
**Design speed is a minimum of 35 mph when entering or exiting Panola Road and 60 mph when entering or exiting I-20.

Major Structures:

Structure	Existing	Proposed
I.D. # 089-0228-0 Panola Road overpass	This bridge was constructed in 1959 and has been widened multiple times. Current sufficiency rating = 73.17	Retain the existing bridge with minor modifications to remove the sidewalk and replace the parapets with new standard S-type side barrier. Two parallel rows of barriers will be constructed at the center of the bridge to protect pedestrian and bicycle are proposed at the center of the bridge. Regular bridge maintenance activities may be required. Bridge and deck condition surveys are anticipated.
Retaining Walls	N/A	A combination of MSE and cantilever walls at multiple locations to minimize R/W impacts.

Major Interchanges/Intersections: I-20 at Panola Road interchange.

Major intersections include Panola Road intersections with I-20 ramp terminals, Fairington Road/Minola Drive, Panola Industrial Boulevard and Snapfinger Woods Drive.

Utility Involvements:

-AGL
-AT&T
-Comcast Cable
-DeKalb County Watershed
-GDOT ITS
-Georgia Power
-MARTA

Public Interest Determination Policy and Procedure recommended (Utilities)? ☒ No ☐ Yes

SUE Required: ☐ No ☒ Yes

Railroad Involvement: N/A

Complete Streets - Bicycle, Pedestrian, and/or Transit Warrants:

Warrants met: ☐ None ☒ Bicycle ☒ Pedestrian ☒ Transit

Right-of-Way:

Required Right-of-Way anticipated: ☐ No ☒ Yes ☐ Undetermined
Easements anticipated: ☐ None ☒ Temporary ☒ Permanent ☐ Utility ☒ Other

Anticipated number of impacted parcels:		38
Displacements anticipated:	Total:	4
	Businesses:	4
	Residences:	0
	Other:	0

Location and Design approval: ☐ Not Required ☒ Required

Off-site Detours Anticipated: ☒ No ☐ Undetermined ☐ Yes

Transportation Management Plan [TMP] Required: ☐ No ☒ Yes
If Yes: Project classified as: ☒ Non-Significant ☐ Significant
TMP Components Anticipated: ☒ TTC ☐ TO ☐ PI

Design Exceptions to FHWA/AASHTO controlling criteria anticipated:

FHWA/AASHTO Controlling Criteria	No	Undeter -mined	Yes	Appvl Date (if applicable)
1. Design Speed	☒	☐	☐	
2. Lane Width	☒	☐	☐	
3. Shoulder Width	☒	☐	☐	
4. Bridge Width	☒	☐	☐	
5. Horizontal Alignment*	☐	☐	☒	12/16/2009
6. Superelevation	☒	☐	☐	
7. Vertical Alignment	☒	☐	☐	
8. Grade	☒	☐	☐	
9. Stopping Sight Distance	☒	☐	☐	
10. Cross Slope	☒	☐	☐	
11. Vertical Clearance	☒	☐	☐	
12. Lateral Offset to Obstruction	☒	☐	☐	
13. Bridge Structural Capacity	☒	☐	☐	

*A design exception is needed for intersection angle at the intersection of Panola Road and Fairington Road. This intersection is located at the southern limits of this project and is at the northern limits of the Panola Road Widening Project (PI No. 0005905). A design exception for an intersection angle of 58˚ has been approved under PI No. 0005905.

* Second design exception may be required for the angle of intersection at both of the Diverging Diamond Interchange intersections. It has not been requested yet.

Design Variances to GDOT Standard Criteria anticipated:

GDOT Standard Criteria	Reviewing Office	No	Undeter--mined	Yes	Appvl Date (if applicable)
1. Access Control - Length of Limited Access	DP&S	☐	☐	☒	
2. Median Usage & Width	DP&S	☒	☐	☐	
3. Intersection Skew Angle	DP&S	☐	☐	☒	12/16/2009
4. Lateral Offset to Obstruction	DP&S	☒	☐	☐	
5. Intersection Sight Distance	DP&S	☒	☐	☐	
6. Bike, Pedestrian & Transit Accommodations	DP&S	☒	☐	☐	
7. GDOT Drainage Manual	DP&S	☒	☐	☐	
8. Georgia Standard Drawings	DP&S	☒	☐	☐	
9. GDOT Bridge & Structural Manual	Bridge Design	☒	☐	☐	
10. Safety Edge	DP&S	☒	☐	☐	

A design variance is needed for Length of limited access along Panola Road north of westbound I-20 ramps. Hillandale Park Ct is proposed to be located at 100 linear feet from westbound off-ramps. This local road will be a right-in/right-out configuration. This variance has not be requested yet.

VE Study anticipated: ☒ No ☐ Yes ☐ Completed – Date:

ENVIRONMENTAL DATA

Anticipated Environmental Document:

GEPA: ☐ **NEPA:** ☒ CE ☐ EA/FONSI ☐ EIS

Project Air Quality:

Is the project located in a PM 2.5 Non-attainment area? ☐ No ☒ Yes
Is the project located in an Ozone Non-attainment area? ☐ No ☒ Yes
Is a Carbon Monoxide hotspot analysis required? ☐ No ☒ Yes

ARC's most recent travel demand model (Plan2040) provides information based on the number of through lanes on a specific segment of roadway. The Plan2040 model has Panola Road coded as four lanes (two lanes in each direction) in the vicinity of the I-20 interchange, which is not consistent with the proposed concept. A traffic analysis conducted for this project shows that three through lanes will be required in the vicinity of the interchange. Extended turn bays and turn lanes are provided in the area of the interchange, and these lanes are not included in the regional demand model because they are not considered as part of the core, through-lane capacity. A request has been made to ARC to update the Plan2040 to match the proposed improvements (Attachment 10).

MS4 Compliance – Is the project located in an MS4 area? ☐ No ☒ Yes

The project is in DeKalb County, which is an MS4 area, and therefore needs to comply with Georgia DOT's MS4 Permit. This permit requires use of post-construction best management practices (BMPs) including detention ponds and enhanced swales where feasible. A conceptual hydrology study memo that discusses the requirements and proposed BMPs is attached to this report in Attachment 8.

Environmental Permits/Variances/Commitments/Coordination anticipated:

Permit/ Variance/ Commitment/ Coordination Anticipated	No	Yes	Remarks
1. U.S. Coast Guard Permit	☒	☐	
2. Forest Service/Corps Land	☒	☐	
3. CWA Section 404 Permit	☐	☒	Anticipated to be less than 300 feet of stream impacts based on conceptual design
4. Tennessee Valley Authority Permit	☒	☐	
5. Buffer Variance	☐	☒	Based on conceptual design
6. Coastal Zone Management Coordination	☒	☐	
7. NPDES	☐	☒	Project disturbs more than 1 acre of land.
8. FEMA	☐	☒	Drainage Improvements are proposed within the FEMA floodplain
9. Cemetery Permit	☒	☐	
10. Other Permits	☒	☐	
11. Other Commitments	☐	☒	Special Provision 107.23G (migratory birds)
12. Other Coordination	☐	☒	Fish & Wildlife Coordination Act (FWCA)
13. Other Coordination	☐	☒	DeKalb County for Lighting Agreement

Is a PAR required? ☒ No ☐ Yes ☐ Completed – Date:

NEPA: A categorical exclusion will be prepared for this project. Underground storage tank (UST) sites occur along the Panola Road in the interchange area. No Section 4(f) resources exist in the project area. Other environmental issues occurring along the other segments include waters of the U.S. and cemetery.

Other Panola Road improvements (PI Nos. 0006880, 0006879, 0005905, and 0006890) are operational, safety, pedestrian and bicycle type improvements, and some of these projects are being moved to the long range program. Projects that are being moved forward will be permitted with individual environmental documents.

Ecology: An ecological resource field survey of the project corridor was conducted, and an Ecology Report was completed, in 2009. Suitable habitat for Georgia aster (*Symphyotrichum georgianum*), a federal Candidate species, was identified within the project corridor and a survey was completed in November 2007 with no Georgia aster found. Due to the age of previous surveys, new survey requirements, and changes to the concept in the area of the I-20/Panola Road interchange, additional field investigations were conducted in 2013 and an Ecology Report Addendum was prepared. An updated field survey for

Georgia aster was completed in October 2013 and no Georgia aster individuals were found; therefore, a biological determination of "no significant adverse effect" to Georgia aster has been proposed for the project. In addition, the presence of migratory birds was detected under the Panola Road Bridge over I-20, which will require the implementation of Special Provision 107.23g. The project will require authorization for the use of Nationwide Permit 14 from the U.S. Army Corps of Engineers prior to construction for proposed stream impacts associated with the interchange unit. Coordination with the U.S. Fish and Wildlife Service in accordance with the Fish and Wildlife Coordination Act is also required for proposed stream impacts.

Based on conceptual design, a steam buffer variance will be required. As design progresses, the need for this permit will be revisited to determine if stream buffer impacts will actually occur and the need for this permit.

An addendum to the approved Phase II Ecological Survey will be completed to document the project changes and the impacts associated with PI 0002868.

History: The entire Panola Road Improvements project corridor was originally field surveyed for historic resources in 2007 and 2008. A Historic Resources Survey Report was completed and received State Historic Preservation Office (SHPO) concurrence in January 2008; a subsequent addendum to this report (in the form of a Memorandum to File) was completed in August 2008 to address the I-20/Panola Road interchange area. As a result of these survey efforts, seven properties were considered eligible for inclusion on the National Register of Historic Places (NRHP). However, none of these properties are located in the area of PI No. 0002868. An Assessment of Effects (AOE) Report was completed for the proposed project and received concurrence from the SHPO in October 2009. According to the AOE Report, the project would have No Adverse Effect on any of the NRHP-eligible properties along the project corridor. However, due to the age of that survey, changes to the concept in the area of the I-20/Panola Road interchange, and other changes to the design of the overall Panola Road Improvements project, the corridor was resurveyed for properties 50 years old or older in August 2013. No new NRHP eligible properties were identified during the resurvey. An Addendum to the Historic Resources Survey Report was prepared and received SHPO concurrence in January 2014.

A memo to file will be completed to document only the impacts (No impacts) associated with PI 0002868 and will not require SHPO concurrence.

Archaeology: No cemeteries are located in the immediate area of the I-20/Panola Road interchange. However, a family plot is located near the northern limits of PI No. 0002868. This plot is located on the eastern side of Panola Road near the intersection of Snapfinger Woods Drive, approximately 12 feet off the roadway. No impacts are proposed to occur to this family plot cemetery.

Surveys for archaeological resources within the Panola Road improvements corridor have been conducted. Three Short Forms of Negative Findings have been prepared documenting that no archaeological resources are located within the corridor and none would be impacted by the project; all reports have received Georgia DOT and/or SHPO concurrence. A memo to file will be completed to document only the impacts (No Impacts) associated with PI 000286 and will not require SHPO concurrence.

Air & Noise: Addenda to the previously approved Air Quality and Noise Impact Assessments have been completed. The Air Quality Impact Assessment required a carbon monoxide hot-spot analysis, a qualitative Mobile Source Air Toxics (MSATs) analysis, and interagency concurrence for Projects Not of Concern for particulate matter 2.5 (PM 2.5). The Addendum was approved and signed on February 5th, 2014. A revised Air Quality report will be required with a new Letter of Determination (LOD) for PM 2.5 to demonstrate PI 0002868 is in compliance with air quality standards.

The Noise Impact Assessment requires modeling of existing and projected future no-build and build noise levels, as well as a noise abatement and barrier analysis. Noise walls are not anticipated to be needed around the I-20/Panola Road interchange. A revised Noise Impact Assessment report will be required to account for any footprint change associated with the project change.

Public Involvement: Three public information open houses (PIOHs) and one community meeting have been held for the overall Panola Road Improvements project. These meetings are summarized below.

- April 4, 2006 PIOH: A total of 45 members of the public attended. Comments received included concerns about the potential adverse impacts to businesses from construction of a raised median and the need to straighten the curves along Panola Road. In addition, it was requested that dual right-turn lanes be investigated at the Panola Road/Fairington Road intersection; a signal be installed at the Panola Road/Snapfinger Road intersection; sidewalks be provided on both sides of Panola Road; street lighting be added along the corridor; landscaping be provided in the proposed median; and signal times be lengthened.

- May 23, 2006 PIOH: A total of 115 members of the public attended. Comments received included opposition to a median in a residential setting; the potential for inconveniences in access to residential and commercial areas as a result of a median and resulting potential adverse impacts on businesses; general concerns about widening of the road, including the potential for increased vehicle speeds and traffic; the potential for decreased property values with a median and a widened roadway; sight distance concerns; and traffic noise concerns. In addition, it was requested that a signal be installed at the Panola Road/Snapfinger Road intersection; traffic signals along Panola Road be synchronized instead of the road being widened; and landscaping be provided in the proposed median.

- September 28, 2006 Panola Road Civic Association Meeting (an association of local residents and business owners): At this meeting, DeKalb County met with representatives of the local community to discuss specific concerns and interim improvements that could be made along the Panola Road corridor prior to the Panola Road Improvements project being constructed.

  Note: As a result of the input received at the April 4 and May 23, 2006 PIOHs and the Panola Road Civic Association Meeting, the typical section of PI No. 0006880 of the overall Panola Road Improvements project was reduced from a five-lane, median-separated section to a three-lane section (including a center turn lane).

- June 13, 2013 PIOH: A total of 172 members of the public attended. Comments received included concerns regarding the proposed median (e.g., adverse economic impacts, inability to turn left off certain streets), noise and air quality impacts in residential neighborhoods, increased traffic and speeds, property impacts (from right-of-way acquisition and displacements), and the project schedule. It was requested that additional median openings and traffic signals be installed at various locations along Panola Road; sidewalks and streetlights be added along the corridor; a DDI be considered for the I-20/Panola Road interchange; increased interparcel connections be made in lieu of a median; and project funds be used to increase public transit. Of the 54 written comments received at the PIOH, 17 stated preference for Alternate 1 at the interchange, 13 stated preference for Alternate 2, and 24 did not state a preference.

The public has always been shown all five Panola Road corridor improvement projects and informed that the project was all being cleared under one Environmental Assessment. As a result, another PIOH is anticipated in 2015 to inform the public of the changes to the proposed Panola Road corridor project and discuss the advancement of just the I-20/Panola Road interchange as a single project under a CE.

Major stakeholders: DeKalb County, MARTA, the traveling public, residential communities along Panola Road, and business owners along Panola Road (including the Panola Road Civic Association). Coordination will be needed with DeKalb County to split the corridor projects into different sections.

CONSTRUCTION

Issues potentially affecting constructability/construction schedule:
Replacement of an existing bridge poses challenges with staging due to the need to maintain traffic flow during construction. This project is proposing to shift Panola Road to the west to improve horizontal alignment. This shift will also allow for staged bridge construction.

Early Completion Incentives recommended for consideration: ☒ No ☐ Yes

PROJECT RESPONSIBILITIES

Project Activities:

Project Activity	Party Responsible for Performing Task(s)
Concept Development	ARCADIS
Design	ARCADIS
Right-of-Way Acquisition	Georgia DOT
Utility Relocation (reimbursable)	Utility Owners
Letting to Contract	Georgia DOT
Construction Supervision	Georgia DOT
Providing Material Pits	Contractor
Providing Detours	N/A
Environmental Studies, Documents, and Permits	ARCADIS
Environmental Mitigation	Georgia DOT
Construction Inspection & Materials Testing	Georgia DOT

Lighting required: ☐ No ☒ Yes

Georgia DOT policy states that lighting should be considered for all interchange projects, especially in an urban area, assuming a lighting agreement can be reached with local government. Interchange lighting is currently included in the project. A lighting agreement for maintenance between Georgia DOT and DeKalb County is required.

Initial Concept Meeting: October 17, 2013

Concept Meeting: December 9, 2013

Other Coordination Meeting: December 17, 2014 and March 13, 2015 – Revise Project Scope and Review DDI Concept with Director of Engineering

Other projects in the area: The following projects are along the Panola Road corridor in DeKalb County:

- Project: CSSTP-0006-00(880) (PI No. 0006880, DeKalb County) CR 5150/PANOLA RD FM SR 212/BROWNS MILL TO SR 155/SNAPFINGER for a total distance of approximately 1.4 miles.
- Project: CSSTP-0006-00(879) (PI No. 0006879, DeKalb County) CR 5150/PANOLA ROAD FROM CR 604/THOMPSON MILL ROAD TO SR 212 for a total distance of approximately 1.7 miles.
- Project: CSSTP-0005-00(905) (PI No. 0005905, DeKalb County) CR 5150/PANOLA ROAD FM THOMPSON MILL ROAD TO FAIRINGTON ROAD for a total distance of approximately 0.4 mile. This project is just to the south of Project 0002868.
- Project: CSSTP-0006-00(890) (PI No. 0006890, DeKalb County) CR 5150/PANOLA RD FM SR 12/COVINGTON HWY TO SNAPFINGER WD DR. This project is just to the north of Project 0002868.
- Project NHS00-000-00(715) (PI No. 0000715, DeKalb County) I-20 FROM I-285 EAST TO EVANS MILL ROAD ADD 2 HOV LANES. This project is part of an entire managed lane system planned for the Atlanta metropolitan area.
- Project IM000-0000-00(378) (PI No. 0000378, DeKalb County) I-285/I-20 EAST: RECONSTRUCT INTERCHANGE. This project may include operational improvement along I-20 east of I-285.
- PI No. 0009542, DeKalb County, I-20 EB FROM I-285 TO CR 5150/PANOLA ROAD - CD SYSTEM. Project has recently been opened to traffic.
- PI No. 00012662, Cobb, DeKalb, Douglas and Fulton Counties, is the addition of variable speed signs along I-20 from SR 6/Douglas County to SR 124 in DeKalb County.

Other coordination to date: Coordination with FHWA on Interchange Modification Report (IMR) Requirement (Attachment 13). IMR has been waived.

Project Cost Estimate and Funding Responsibilities:

	Breakdown of PE	ROW	Reimbursable Utility	CST**	Environmental Mitigation	Total Cost
By Whom	Georgia DOT	Georgia DOT	Georgia DOT	Georgia DOT	N/A	
$ Amount	*$3,000,000	$15,960,000	$0	$12,308,000	N/A	$31,268,000

Date of Estimate	1/20/2014	5/7/2015	9/24/2013	5/7/2015		

* Latest costs listed in Georgia DOT Preconstruction Status Report for this project to be updated.
**CST Cost includes: Construction, Contingency, Engineering and Inspection, and Liquid AC Cost Adjustment.

ALTERNATIVES DISCUSSION

Alternative selection: A brief summary of the various alternatives that were reviewed is provided below.

Preferred Alternative 4: Retain existing Panola Road Bridge and reconfigure the existing interchange to operate as a diverging diamond interchange. Maintain two northbound and southbound through lanes.			
Estimated Property Impacts:	**4 Comm. Relocations**	**Estimated Total Construction Cost:**	**$12,308,000**
Estimated ROW Cost:	**$15,960,000**	**Estimated CST Time:**	**18 months**
Rationale: This alternative meets the project needs; it has the least impacts to adjoining businesses with the fewest business relocations. This alternate utilizes the existing bridge with least bridge modification cost.			

No-Build Alternative			
Estimated Property Impacts:	**None**	**Estimated Total Cost:**	**None**
Estimated ROW Cost:	**None**	**Estimated CST Time:**	**None**
Rationale: The no-build alternative does not meet the goals of the project.			

Alternative 1: Replacing existing interchange with a traditional diamond. Add an additional northbound through lane to provide additional capacity.			
Estimated Property Impacts:	**10 Comm. Relocations**	**Estimated Total Construction Cost:**	**$26.5 million***
Estimated ROW Cost:	**$26,842,250**	**Estimated CST Time:**	**24 months**
Rationale: This alternative also meets the project goals; however, it is more expensive and has additional impacts to the adjoining businesses compared to Alternate 4. Ramps in this alternative are spaced at a minimum of 660 feet, which pushes the ramps farther out into existing businesses. Adding capacity was initially part of the project justification for this corridor. However, the project justification of the current project focuses on operational and safety improvements. In addition, the traffic demand does not justify another northbound through lane. Therefore, an additional through lane is not warranted.			

Alternative 2: Replacing existing interchange with a compressed diamond interchange. Add an additional northbound through lane to provide additional capacity.			
Estimated Property Impacts:	**6 Comm. Relocations**	**Estimated Total Construction Cost:**	**$26.5 million***
Estimated ROW Cost:	**$21,144,000**	**Estimated CST Time:**	**24 months**
Rationale: This alternative also meets the project goals; however, it is more expensive and has additional impacts to the adjoining businesses compared to Alternate 4. Adding capacity was initially part of the			

project justification for this corridor. However, the project justification of the current project focuses on operational and safety improvements. In addition, the traffic demand does not justify another northbound through lane. Therefore, an additional through lane is not warranted.

Alternative 3: Replacing existing interchange with a diverging diamond interchange. Add an additional northbound through lane to provide additional capacity.			
Estimated Property Impacts:	**7 Comm. Relocations**	**Estimated Total Construction Cost:**	**$26.5 million***
Estimated ROW Cost:	**$22,740,000**	**Estimated CST Time:**	**24 months**
Rationale: This alternative also meets the project goals; however, it is more expensive and has additional impacts to the adjoining businesses compared to Alternate 4. In addition, this alternative requires a design exception for horizontal alignments to facilitate the diverging movements north and south of the interchange.			

Alternative 5: Retain existing Panola Road Bridge and reconfigure the existing interchange to operate as a diverging diamond interchange. Maintain two northbound and southbound through lanes. Widen the bridge to provide 12' wide lanes. Maintain two northbound and southbound through lanes.			
Estimated Property Impacts:	**4 Comm. Relocations**	**Estimated Total Construction Cost:**	**$ 12,808,000**
Estimated ROW Cost:	**$15,960,000**	**Estimated CST Time:**	**18 months**
Rationale: This alternative also meets the project needs. This alternate is more expensive as compared to Alternate 4 due to the widening of the existing bridge. Property impacts are similar to Alternate 4.			

***** *Alternatives 1, 2, and 3 assume that the existing bridge will be replaced. All other improvements are similar for these three alternatives. Therefore the same construction cost is being assumed on all three alternates. The ROW costs will be different based on the impacted parcels and improvements.*

Comments: None.

Attachments:

1. Concept Layout
2. Typical Sections
3. Detailed Cost Estimates:
    a. Construction including Engineering and Inspection
    b. Completed Fuel & Asphalt Price Adjustment Forms
    c. Right-of-Way
    d. Utilities
4. Crash Summaries
5. Traffic Diagrams
6. Traffic Analysis Summary
7. Pavement Studies
    a. Preliminary Pavement Evaluation Summary
    b. Life Cycle Cost Analysis and Pavement Type Selection Recommendation
8. Bridge Inventory

9. Hydrology Study for MS4 Permit
10. Conforming Plan's Network Schematics Showing Through Lanes
11. Minutes of Concept Meetings
12. Approved Design Exception for Intersection Angle
13. Lighting Agreement
14. Minutes of Other Coordination Meetings

APPROVALS

Concur: _____
Director of Engineering

Approve: _____ _____
Chief Engineer Date

ATTACHMENT 1
CONCEPT LAYOUT

Panola Road at I-20 from Fairington Road to Snapfinger Woods Drive

DDI on Existing Bridge
PRELIMINARY

Project NHS00-0002-00(868) P.I. 0002868

May 2015

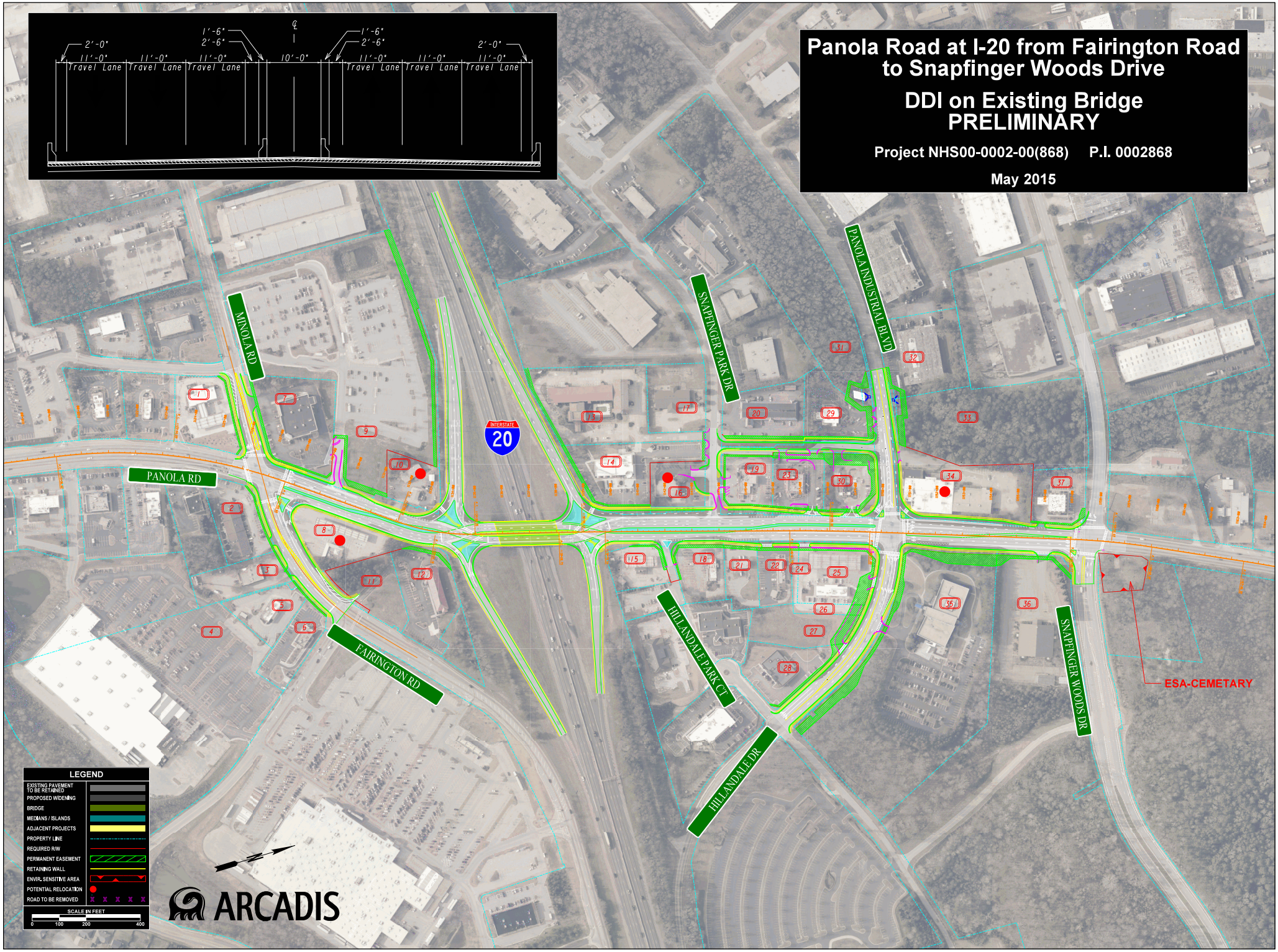

ATTACHMENT 2
TYPICAL SECTIONS

STATE	PROJECT NUMBER	SHEET NO.	TOTAL SHEETS
GA.	NHS00-0002-00(868)		

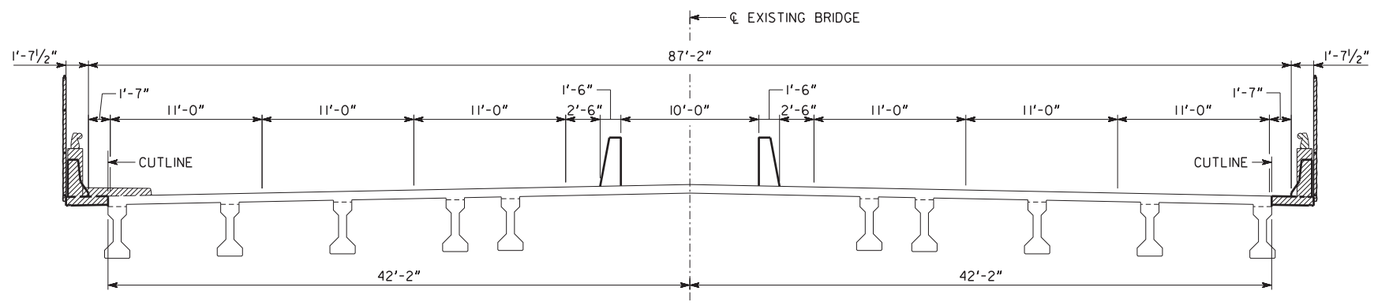

TYPICAL SECTION

LOOKING AHEAD

PANOLA ROAD BRIDGE OVER I-20

LEGEND

- EXISTING SIDEWALK, PARAPET, AND FENCE TO BE REMOVED.
- EXISTING STRUCTURE TO REMAIN.
- NEW CONSTRUCTION.

BRIDGE NO. 1

ARCADIS
2410 PACES FERRY ROAD, SUITE 400
ATLANTA, GEORGIA 30339
TEL: 770/431-8666 FAX: 770/435-2666

GEORGIA
DEPARTMENT OF TRANSPORTATION
ENGINEERING DIVISION-OFFICE OF BRIDGES AND STRUCTURES

PRELIMINARY LAYOUT
PANOLA ROAD AT I-20
CONSTRUCTION SEQUENCE

DEKALB COUNTY NHS00-0002-00(868)

SCALE: NO SCALE MARCH 2015

REVISIONS	BY	DATE

DRAWING NO. 35-02

BRIDGE SHEET 2 OF 2

DESIGNED
DRAWN
CHECKED
DESIGN GROUP
REVIEWED DLC/WMD
APPROVED BFR

1 INCH WHEN PRINTED FULL SIZE

USER NAME: Japonte
DATE: 3/25/2015 TIME: 10:39:49 AM
G:\TRA\GADT0105\Bridge\02-panolaV8i-TS.dgn

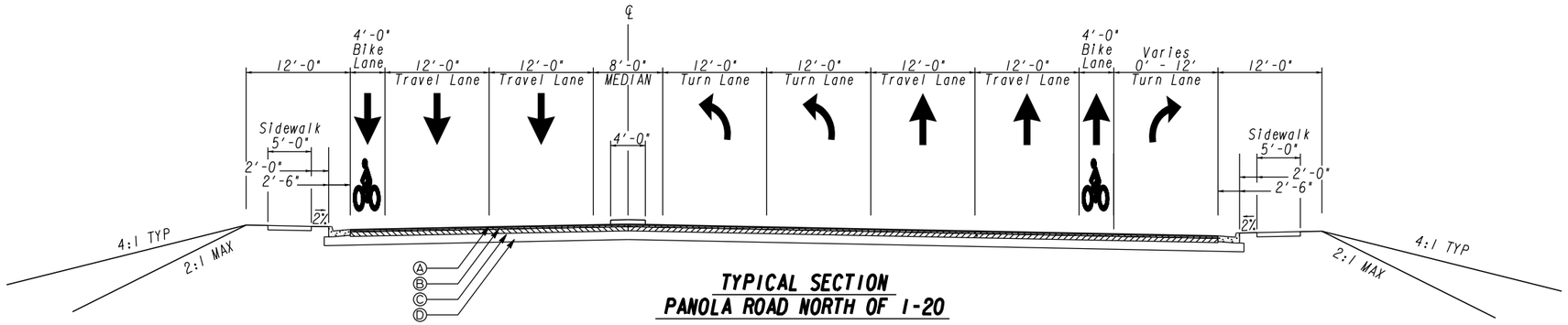

TYPICAL SECTION
PANOLA ROAD NORTH OF I-20

N. T. S.

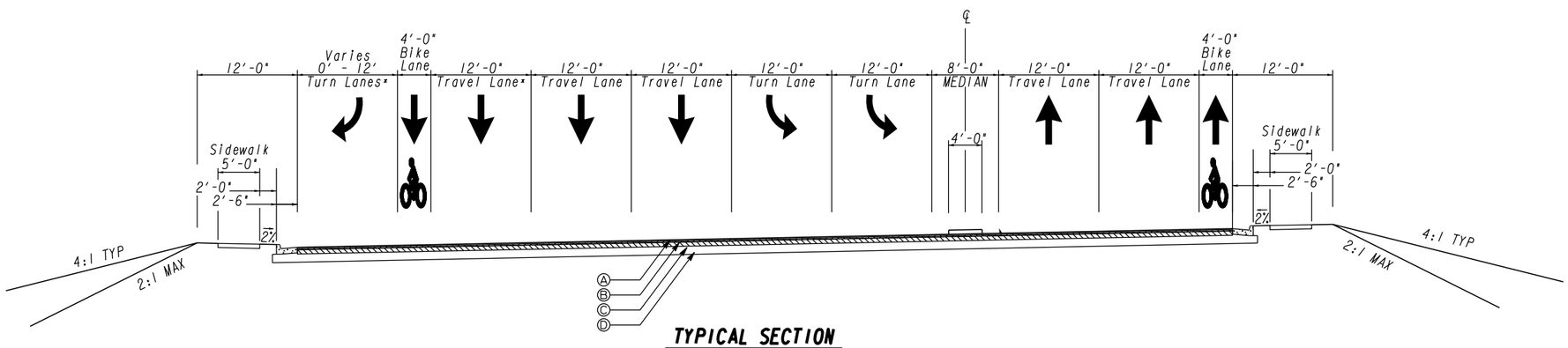

TYPICAL SECTION
PANOLA ROAD SOUTH OF I-20

N. T. S.

Ⓐ 12.5mm Asphaltic Concrete Superpave (165#/SY)
Ⓑ 19mm Asphaltic Concrete Superpave (220#/SY)
Ⓒ 25mm Asphaltic Concrete Superpave (880#/SY)
Ⓓ 14" Graded Aggregate Base

REVISION DATES		

STATE OF GEORGIA
DEPARTMENT OF TRANSPORTATION
OFFICE: PROGRAM DELIVERY

CONCEPTUAL TYPICAL SECTIONS

PANOLA ROAD AT I-20

DRAWING No. 05-002

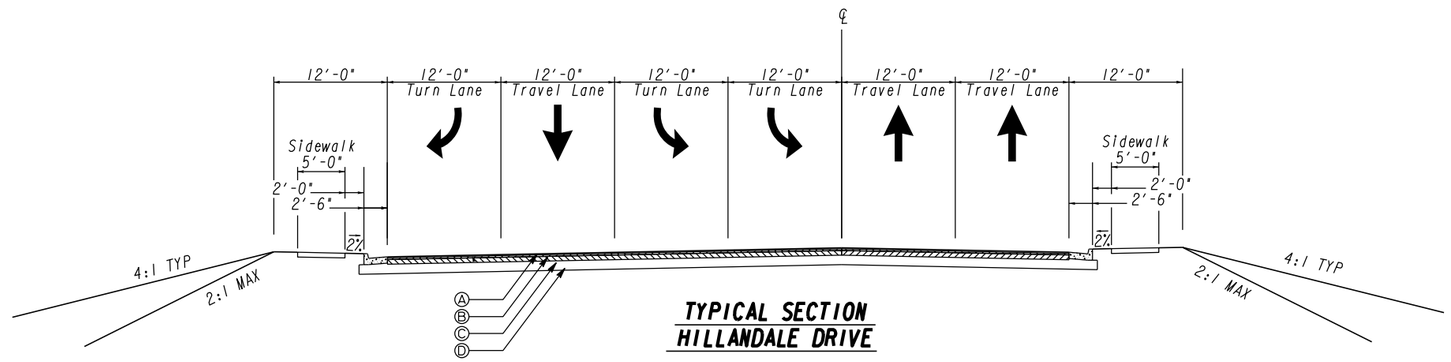

TYPICAL SECTION
HILLANDALE DRIVE

N. T. S.

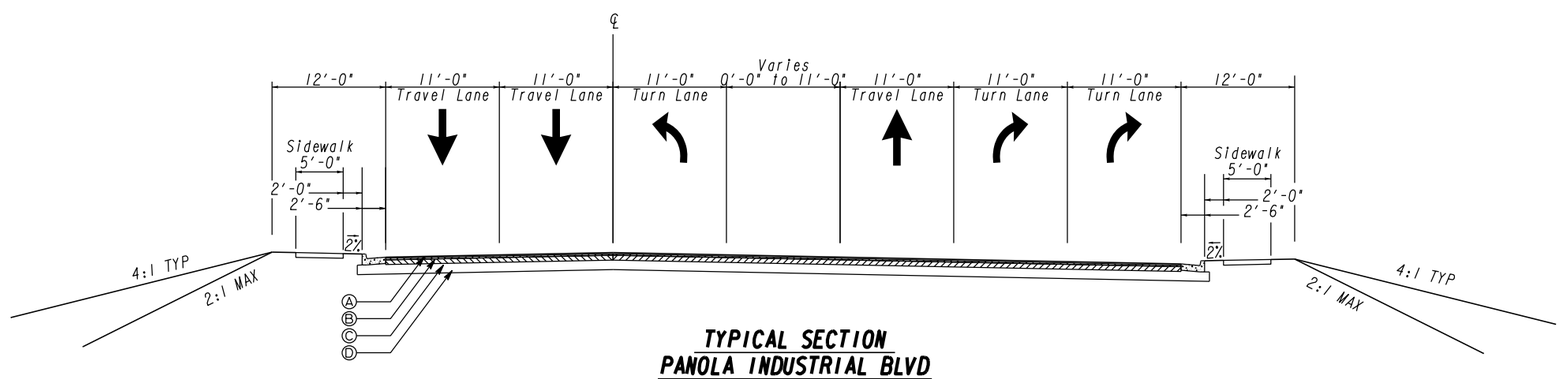

TYPICAL SECTION
PANOLA INDUSTRIAL BLVD

N. T. S.

(A) 12.5mm Asphaltic Concrete Superpave (165#/SY)
(B) 19mm Asphaltic Concrete Superpave (220#/SY)
(C) 25mm Asphaltic Concrete Superpave (880#/SY)
(D) 14" Graded Aggregate Base

REVISION DATES		

STATE OF GEORGIA
DEPARTMENT OF TRANSPORTATION

OFFICE: PROGRAM DELIVERY

CONCEPTUAL TYPICAL SECTIONS

HILLANDALE DRIVE AND
PANOLA INDUSTRIAL BLVD

DRAWING No. 05-003

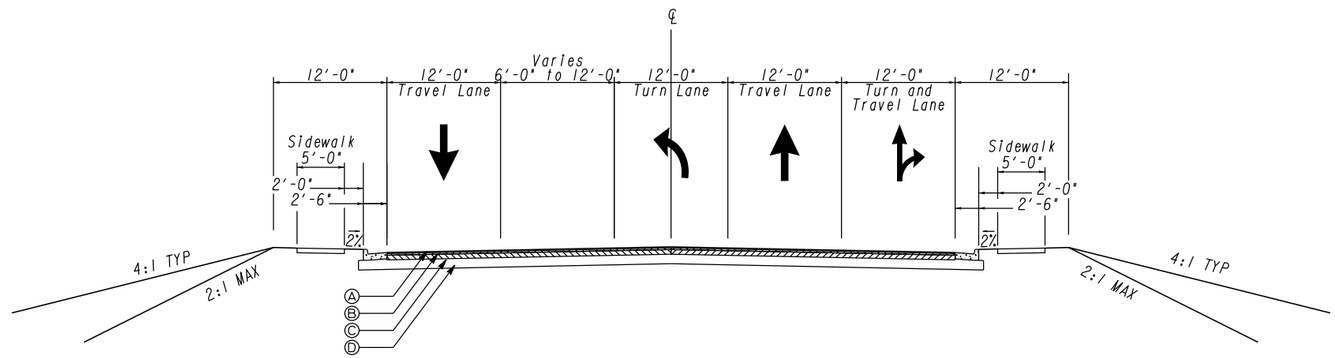

TYPICAL SECTION
MINOLA RD

N.T.S.

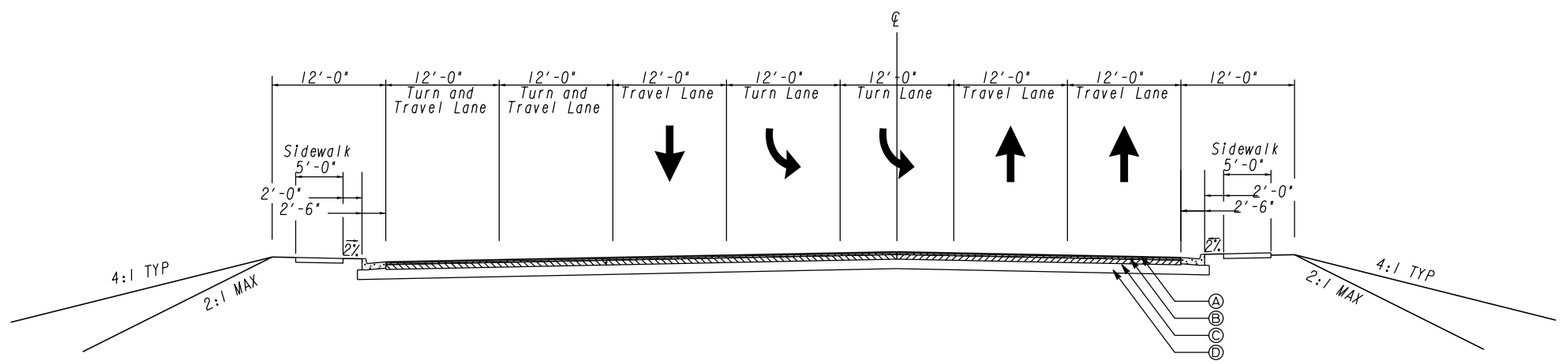

TYPICAL SECTION
FAIRINGTON RD

N.T.S.

Ⓐ 12.5mm Asphaltic Concrete Superpave (165#/SY)
Ⓑ 19mm Asphaltic Concrete Superpave (220#/SY)
Ⓒ 25mm Asphaltic Concrete Superpave (880#/SY)
Ⓓ 14" Graded Aggregate Base

REVISION DATES		

STATE OF GEORGIA
DEPARTMENT OF TRANSPORTATION
OFFICE: PROGRAM DELIVERY

CONCEPTUAL TYPICAL SECTIONS

MINOLA ROAD
FAIRINGTON ROAD

DRAWING No. 05-004

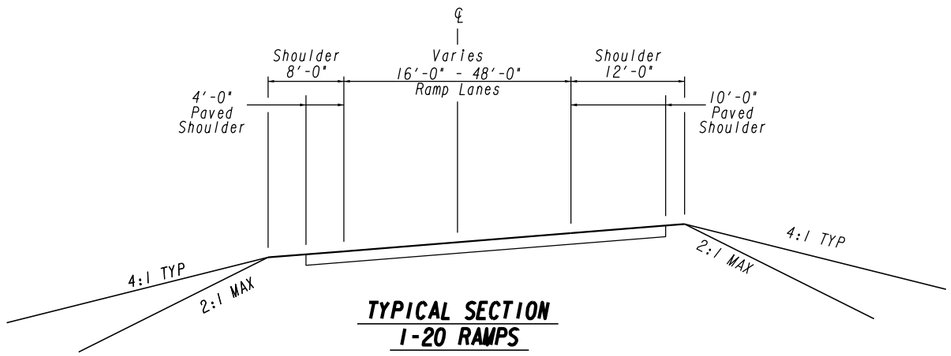

TYPICAL SECTION
I-20 RAMPS

N.T.S.

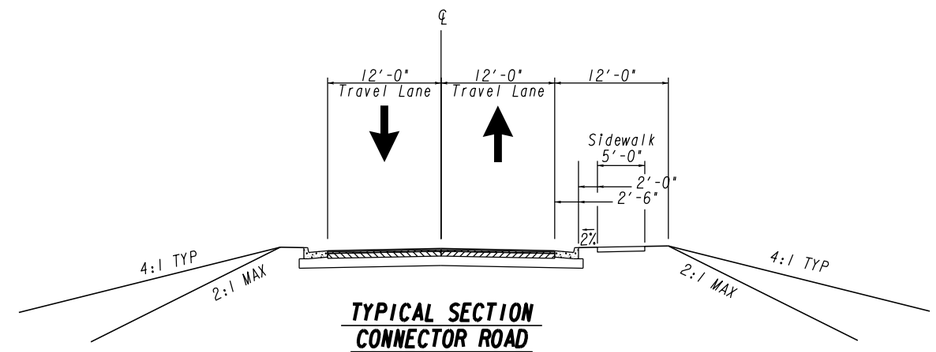

TYPICAL SECTION
CONNECTOR ROAD

N.T.S.

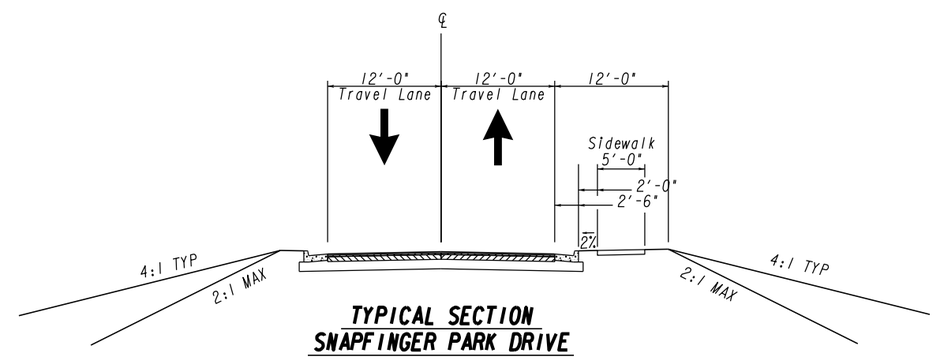

TYPICAL SECTION
SNAPFINGER PARK DRIVE

N.T.S.

REVISION DATES		

STATE OF GEORGIA
DEPARTMENT OF TRANSPORTATION

OFFICE: PROGRAM DELIVERY

TYPICAL SECTIONS

I-20 RAMPS
CONNECTOR ROAD
SNAPFINGER PARK DRIVE

DRAWING No.
05-005

ATTACHMENT 3

DETAILED COST ESTIMATES

0002868 Cost Estimate Summary

Summary of Cost Estimates	
Construction	
Construction Cost	$9,935,836
E&I (5%)	$496,792
Contingency (15%)	$1,490,375
Liquid Asphalt Adjustment ($	$384,770
Total construction	$12,307,773
Right-of-Way *	$15,960,000
Utilities (Reinb.)	$0
PE	$3,000,000
Total Project Cost	**$31,267,773**

* Preliminary Estimate. Detailed ROW Estimate currently being prepared.

STATE HIGHWAY AGENCY

DATE : 05/06/2015
PAGE : 1

JOB ESTIMATE REPORT

JOB NUMBER : 0002868_PANOLA SPEC YEAR: 01
DESCRIPTION: PANOLA ROAD

ITEMS FOR JOB 0002868_PANOLA

LINE	ITEM	ALT	UNITS	DESCRIPTION	QUANTITY	PRICE	AMOUNT
0005	150-1000		LS	TRAFFIC CONTROL - PI NO 0002868	1.000	1300000.00	1300000.00
0009	153-1300		EA	FIELD ENGINEERS OFFICE TP 3	1.000	71962.93	71962.93
0010	210-0100		LS	GRADING COMPLETE - PI NO 0002868	1.000	500000.00	500000.00
0015	310-1101		TN	GR AGGR BASE CRS, INCL MATL	17455.000	16.19	282596.45
0020	402-1812		TN	RECYL AC LEVELING,INC BM&HL	3640.000	82.94	301901.60
0025	402-3121		TN	RECYL AC 25MM SP,GP1/2,BM&HL	11227.000	60.53	679570.31
0030	402-3130		TN	RECYL AC 12.5MM SP,GP2,BM&HL	6567.000	87.21	572744.98
0035	402-3190		TN	RECYL AC 19 MM SP,GP 1 OR 2 ,INC BM&HL	4882.000	81.58	398277.17
0040	402-3600		TN	RECY AC 12.5,SMA,GP2 ON,INCLP-,BM&HL	0.000	95.00	0.00
0045	413-1000		GL	BITUM TACK COAT	12000.000	2.62	31510.08
0054	430-0610		SY	PLN PC CONC PVMT/HES/ 11" TK	0.000	37.00	0.00
0055	432-0206		SY	MILL ASPH CONC PVMT/ 1.50" DEP	12000.000	1.41	16962.96
0060	433-1100		SY	REF CONC APPR SL/INCL CURB	620.000	149.39	92626.35
0065	441-0018		SY	DRIVEWAY CONCRETE, 8 IN TK	2976.000	40.38	120187.52
0070	441-0104		SY	CONC SIDEWALK, 4 IN	4489.000	20.96	94099.32
0075	441-0108		SY	CONC SIDEWALK, 8 IN	986.000	68.97	68012.91
0079	441-0204		SY	PLAIN CONC DITCH PAVING, 4 IN	1500.000	23.30	34963.08
0080	441-0748		SY	CONC MEDIAN, 6 IN	5776.000	33.72	194807.15
0085	441-5002		LF	CONC HEADER CURB, 6", TP 2	411.000	15.28	6282.91
0090	441-5008		LF	CONC HEADER CURB, 6 IN, TP 7	5967.000	12.00	71604.00
0095	441-6222		LF	CONC CURB & GUTTER/ 8"X30"TP2	92386.000	11.82	1092002.52
0100	441-6740		LF	CONC CURB & GUTTER/ 8"X30" TP7	3698.000	18.44	68195.59
0105	446-1100		LF	PVMT REF FAB STRIPS, TP2,18 INCH WIDTH	11219.000	3.36	37754.74
0107	500-3110		LF	CLASS A CONCRETE, TYPE P1, RETAINING WAL	500.000	405.00	202500.00
0108	500-3115		LF	CLASS A CONCRETE, TYPE P2, RETAINING WAL	1500.000	405.00	607500.00
0110	500-3120		LF	CLASS A CONCRETE, TYPE P3, RETAINING WAL	200.000	588.00	117600.00
0115	500-3201		CY	CL B CONC, RET WALL	52.000	487.52	25351.07
0119	500-3800		CY	CL A CONC, INCL REINF STEEL	12.000	914.71	10976.61
0120	500-9999		CY	CL B CONC,BASE OR PVMT WIDEN	69.000	160.05	11044.04
0129	543-9000		LS	CONSTR OF BRIDGE COMPLETE - PI NO 0002868	1.000	475000.00	475000.00
0130	550-1180		LF	STM DR PIPE 18",H 1-10	3000.000	34.30	102910.14
0135	550-1240		LF	STM DR PIPE 24",H 1-10	600.000	41.44	24864.72
0140	550-1360		LF	STM DR PIPE 36",H 1-10	100.000	110.85	11085.14
0144	550-1721		LF	STM DR PIPE 72",H 10-15	100.000	215.00	21500.00
0145	550-3318		EA	SAFETY END SECTION 18",STD,4:1	8.000	587.16	4697.28
0150	550-3324		EA	SAFETY END SECTION 24",STD,4:1	4.000	814.56	3258.28
0154	550-3336		EA	SAFETY END SECTION 36",STD,4:1	4.000	950.00	3800.00
0155	620-0100		LF	TEMP BARRIER, METHOD NO. 1	4000.000	23.29	93197.80
0171	620-0200		LF	TEMP BARRIER, METHOD NO. 2	250.000	65.47	16368.67
0172	627-1010		SF	MSE WALL FACE, 10 - 20 FT HT, WALL NO - 10	7500.000	36.27	272055.45

JOB ESTIMATE REPORT

0178	627-1100	LF	COPING A, WALL NO - 10	500.000	137.42	68712.18
0193	632-0003	EA	CHANGEABLE MESS SIGN,PORT,TP 3	10.000	6031.06	60310.60
0198	634-1200	EA	RIGHT OF WAY MARKERS	77.000	111.88	8614.97
0203	641-1100	LF	GUARDRAIL, TP T	60.000	76.52	4591.35
0208	641-1200	LF	GUARDRAIL, TP W	1160.000	17.75	20593.06
0213	641-5001	EA	GUARDRAIL ANCHORAGE, TP 1	4.000	643.73	2574.95
0218	641-5012	EA	GUARDRAIL ANCHORAGE, TP 12	5.000	1868.67	9343.39
0223	668-1100	EA	CATCH BASIN, GP 1	40.000	2053.01	82120.57
0228	668-2100	EA	DROP INLET, GP 1	10.000	1663.68	16636.87
0233	668-4300	EA	STORM SEW MANHOLE, TP 1	10.000	1632.39	16323.92
0237	999-2010	LS	DESIGN COMPLETE - EROSION CONTROL LUMP SUM	1.000	200000.00	200000.00
0308	603-2018	SY	STN DUMPED RIP RAP, TP 1, 18"	200.000	38.00	7600.00
0313	603-7000	SY	PLASTIC FILTER FABRIC	200.000	3.32	664.68
0343	999-3110	EA	DETENTION POND	7.000	40000.00	280000.00
0348	999-3155	LF	DRY SWALE EDGE DRAIN	500.000	45.97	22987.02
0353	636-1033	SF	HWY SIGNS, TP1MAT,REFL SH TP 9	100.000	16.22	1622.83
0358	636-2070	LF	GALV STEEL POSTS, TP 7	200.000	5.80	1161.55
0363	636-5010	EA	DELINEATOR, TP 1	10.000	36.97	369.79
0368	638-1001	LS	STR SUPPORT OVHD SIGN,TP I,STA 1140+00	1.000	100000.00	100000.00
0373	639-2002	LF	STEEL WIRE STRAND CABLE, 3/8"	250.000	4.71	1179.47
0378	639-4004	EA	STRAIN POLE, TP IV	2.000	5783.97	11567.95
0383	647-1000	LS	TRAF SIGNAL INSTALLATION NO - 1	1.000	150000.00	150000.00
0388	647-1000	LS	TRAF SIGNAL INSTALLATION NO - 2	1.000	150000.00	150000.00
0393	647-1000	LS	TRAF SIGNAL INSTALLATION NO - 3	1.000	150000.00	150000.00
0398	647-1000	LS	TRAF SIGNAL INSTALLATION NO - 4	1.000	150000.00	150000.00
0403	647-1000	LS	TRAF SIGNAL INSTALLATION NO - 5	1.000	150000.00	150000.00
0408	653-0120	EA	THERM PVMT MARK, ARROW, TP 2	68.000	60.11	4088.05
0413	653-0210	EA	THERM PVMT MARK, WORD , TP 1	4.000	83.80	335.21
0418	653-1501	LF	THERMO SOLID TRAF ST 5 IN, WHI	29000.000	0.36	10455.08
0423	653-1502	LF	THERMO SOLID TRAF ST, 5 IN YEL	10300.000	0.43	4521.49
0428	653-1704	LF	THERM SOLID TRAF STRIPE,24",WH	750.000	7.14	5357.99
0433	653-1804	LF	THERM SOLID TRAF STRIPE, 8",WH	10000.000	2.08	20825.90
0438	653-3501	GLF	THERMO SKIP TRAF ST, 5 IN, WHI	19500.000	0.22	4446.39
0443	653-3502	GLF	THERMO SKIP TRAF ST, 5 IN, YEL	500.000	0.38	194.39
0448	653-6004	SY	THERM TRAF STRIPING, WHITE	2600.000	2.64	6878.46
0453	653-6006	SY	THERM TRAF STRIPING, YELLOW	500.000	2.84	1422.69
0458	654-1003	EA	RAISED PVMT MARKERS TP 3	100.000	3.37	337.04
0463	657-1054	LF	PRF PL SD PVMT MKG,5",WH,TP PB	12160.000	2.50	30447.67
0468	657-3054	GLF	PRF PL SK PVMT MKG,5",WH,TP PB	3315.000	2.46	8183.94
0473	657-6054	LF	PRF PL SD PVMT MKG,5",YW,TP PB	8530.000	2.71	23194.61
0478	683-1081	EA	LIGHT TOW/STEEL/80'MH/LW EQUIP	4.000	20000.00	80000.00
0483	683-6475	EA	HI-LEVEL LUMIN, TP 4, 1000 W, HP SOD	16.000	775.00	12400.00
0488	935-1116	LF	OUT PLNT FBR OPT CBL,LOOSE TB,SM,72 FBR	2000.000	8.00	16000.00

ITEM TOTAL 9935835.80
INFLATED ITEM TOTAL 9935835.80

TOTALS FOR JOB 0002868_PANOLA

ESTIMATED COST: 9935835.83
E&I (5.0): 496791.79
ESTIMATED TOTAL: 10432627.62

PROJ. NO.	NHS-00-0002-00(868)		CALL NO.
P.I. NO.			
DATE	5/6/2015		

INDEX (TYPE)	**DATE**	**INDEX**
REG. UNLEADED	May-15	$ 2.503
DIESEL		$ 2.809
LIQUID AC		$ 469.00

Link to Fuel and AC Index:
http://www.dot.ga.gov/doingbusiness/Materials/Pages/asphaltcementindex.aspx

LIQUID AC ADJUSTMENTS

PA=[((APM-APL)/APL)]xTMTxAPL

Asphalt

Price Adjustment (PA)			**370266.12**	**$**	**370,266.12**
Monthly Asphalt Cement Price month placed (APM)	Max. Cap	60%	$ 750.40		
Monthly Asphalt Cement Price month project let (APL)			$ 469.00		
Total Monthly Tonnage of asphalt cement (TMT)			1315.8		

ASPHALT	**Tons**	**%AC**	**AC ton**
Leveling	3640	5.0%	182
12.5 OGFC	0	5.0%	0
12.5 mm	6567	5.0%	328.35
9.5 mm SP	0	5.0%	0
25 mm SP	11227	5.0%	561.35
19 mm SP	4882	5.0%	244.1
	26316		**1315.8**

BITUMINOUS TACK COAT

Price Adjustment (PA)			**$ 14,503.70**	**$**	**14,503.70**
Monthly Asphalt Cement Price month placed (APM)	Max. Cap	60%	$ 750.40		
Monthly Asphalt Cement Price month project let (APL)			$ 469.00		
Total Monthly Tonnage of asphalt cement (TMT)			51.54121106		

Bitum Tack Gals	gals/ton	tons
12000	232.8234	51.5412111

BITUMINOUS TACK COAT (surface treatment)

Price Adjustment (PA)			**0**	**$**	**-**
Monthly Asphalt Cement Price month placed (APM)	Max. Cap	60%	$ 750.40		
Monthly Asphalt Cement Price month project let (APL)			$ 469.00		
Total Monthly Tonnage of asphalt cement (TMT)			0		

Bitum Tack	SY	Gals/SY	Gals	gals/ton	tons
Single Surf. Trmt.	0	0.20	0	232.8234	0
Double Surf.Trmt.	0	0.44	0	232.8234	0
Triple Surf. Trmt	0	0.71	0	232.8234	0
					0

TOTAL LIQUID AC ADJUSTMENT	**$**	**384,769.82**

GEORGIA DEPARTMENT OF TRANSPORTATION
DETAILED ROW COST ESTIMATE SUMMARY

Date (MM/YYYY): Project: Panola Rd at I-20
Revised: May-15 County: Dekalb
PI: 2868
Description: DDI using exist bridge
Parcels: 35 R/W Plan Date:

CONTRACT

Land and Improvements	$14,758,800.00
Valuation Services	$220,000.00
Legal Services	$248,625.00
Relocation	$178,750.00
Demolition	$175,000.00
TOTAL CONTRACT	**$15,581,175.00**

INHOUSE

TOTAL INHOUSE	**$376,250.00**
TOTAL ESTIMATED COSTS	$15,957,425.00
TOTAL ESTIMATED COSTS (ROUNDED)	***$15,960,000.00***

Preparation Credits	Hours	Signature

CG#: (DATE)

CG#: (DATE)

Attachment(s): **Project Location Map; Subject/Comp Location Map; Comparable Sales Data**

DEPARTMENT OF TRANSPORTATION
STATE OF GEORGIA

INTER-DEPARTMENT CORRESPONDENCE

FROM: Patrick Allen, P.E.
District Utilities Engineer

DATE: June 8, 2015

TO: Vinesha Pegram, Project Manager

SUBJECT: PRELIMINARY UTILITY COST ESTIMATE for P.I. 0002868

As requested by your office, we are furnishing you with a Preliminary Cost Estimate for each utility with facilities potentially located with the project limits.

FACILITY OWNER	REIMBURSABLE	NON-REIMBURSABLE	TOTAL
Georgia Power Company	$0.00	$114,400.00	$114,400.00
AT&T		$663,432.00	$663,432.00
AGL		$112,323.00	$112,323.00
Comcast Cable		$113,432.00	$113,432.00
DeKalb County Watershed		$156,640.00	$156,640.00
			$0.00
			$0.00
			$0.00
			$0.00
			$0.00
			$0.00
			$0.00
			$0.00
			$0.00
			$0.00
			$0.00
			$0.00
			$0.00
			$0.00
			$0.00
			$0.00
TOTAL	$0.00	$1,160,227.00	$1,160,227.00

This estimate is based upon the current information. We will provide an updated estimate when the plans are further developed.

If you have any questions, please contact Wade Woodard at 770-986-1117

RSB/PA/SW/WW

Cc: Michael J. Bolden, State Utilities Engineer

ATTACHMENT 4
CRASH SUMMARIES

Crash rate per 100 million vehicle miles traveled

Panola Rd		2005			2006			2007			2008			2009		
		AADT	Corridor Avg.	Statewide Avg.	AADT	Corridor Avg.	Statewide Avg.	AADT	Corridor Avg.	Statewide Avg.	AADT	Corridor Avg.	Statewide Avg.	AADT	Corridor Avg.	Statewide Avg.
M.P. 3.6	Total Crashes		2,127	554		1,596	548		1,695	513		3,340	469		1,909	463
To	Fatality Crashes	28,339	0	1.63	29,756	0	1.55	31,244	0	1.48	32,806	0	1.47	34,447	0	1.10
M.P. 3.75	Injury Crashes		516	140		675	137		292	126		1,113	117		1,007	115
M.P. 3.75	Total Crashes		3,533	554		3,263	548		4,078	513		2,220	469		2,554	463
To	Fatality Crashes	28,434	0	1.63	29,856	0	1.55	31,349	0	1.48	32,916	0	1.47	34,562	0	1.10
M.P. 3.84	Injury Crashes		1,392	140		612	137		874	126		555	117		528	115
M.P. 3.84	Total Crashes		1,224	554		1,263	548		555	513		1,322	469		168	463
To	Fatality Crashes	29,835	0	1.63	31,327	0	1.55	32,893	93	1.48	34,538	0	1.47	36,265	0	1.10
M.P. 3.93	Injury Crashes		0	140		777	137		278	126		176	117		0	115
M.P. 3.93	Total Crashes		3,475	554		2,664	548		2,998	513		2,636	469		976	463
To	Fatality Crashes	26,938	0	1.63	28,285	0	1.55	29,699	0	1.48	31,184	0	1.47	32,744	0	1.10
M.P. 4.05	Injury Crashes		1,526	140		726	137		1,153	126		805	117		209	115

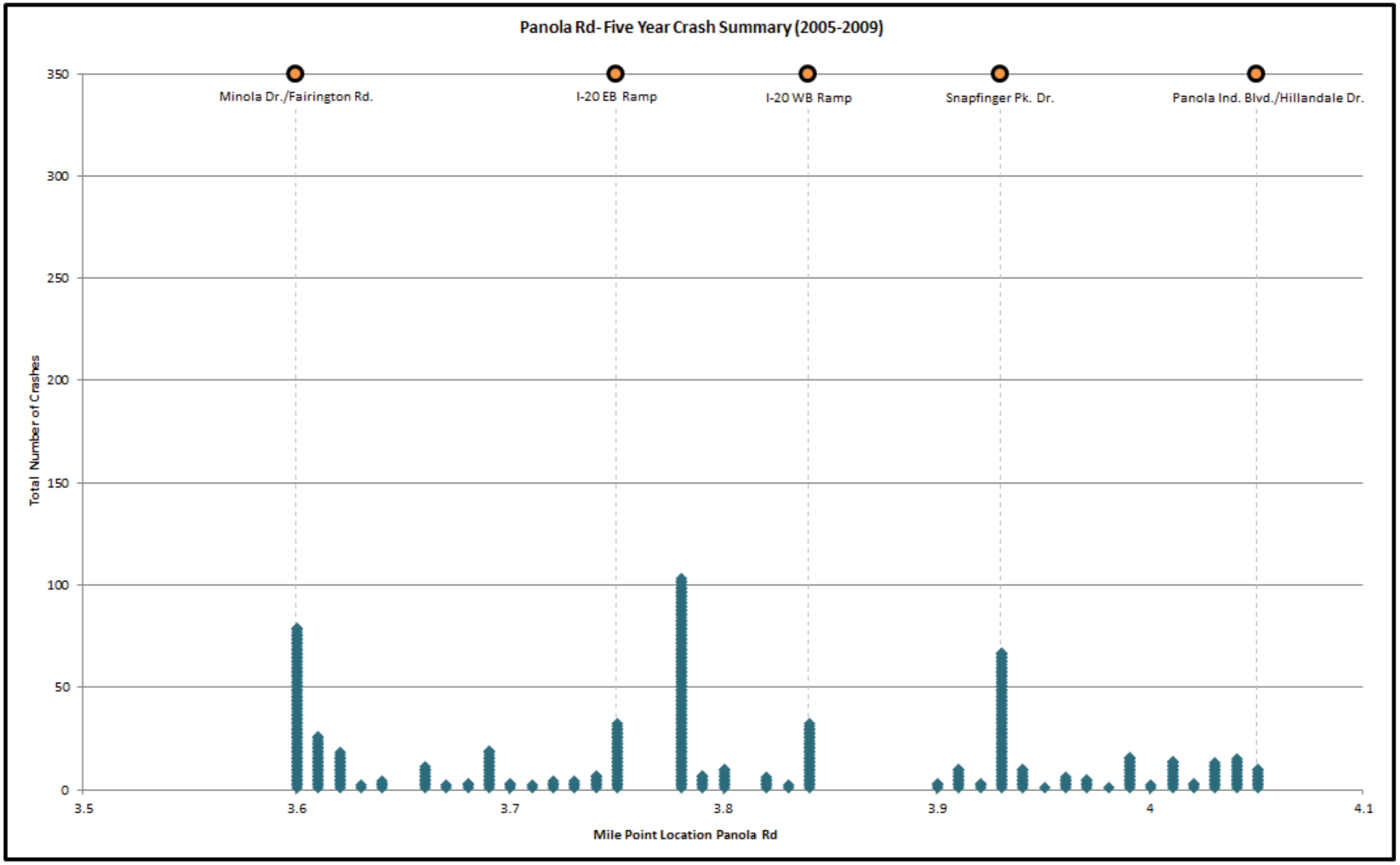

Panola Rd - MP 3.6 to MP 4.05

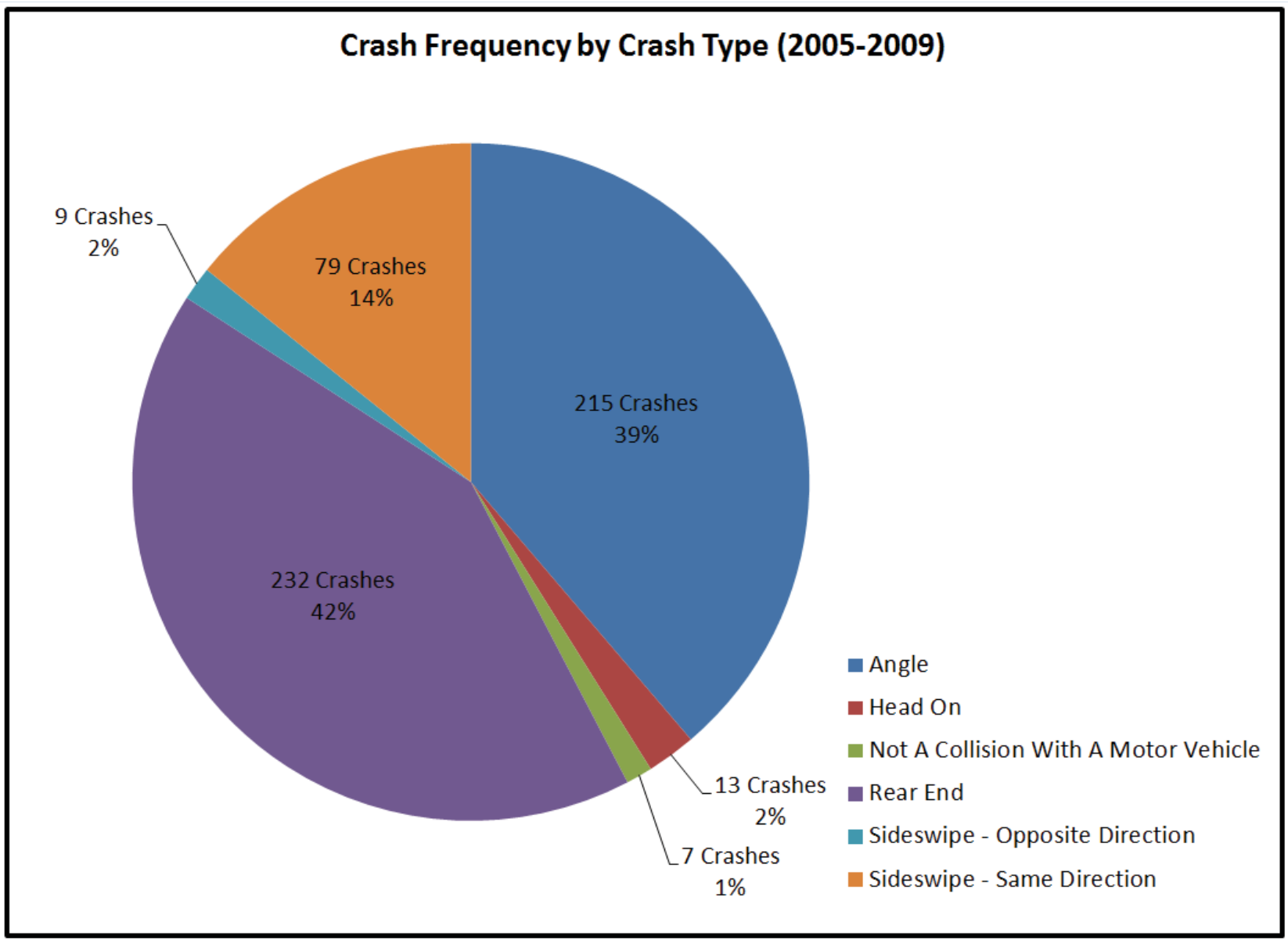
Crash Frequency by Crash Type (2005-2009)
9 Crashes
2%
79 Crashes
14%
215 Crashes
39%
232 Crashes
42%
13 Crashes
2%
7 Crashes
1%
Angle
Head On
Not A Collision With A Motor Vehicle
Rear End
Sideswipe - Opposite Direction
Sideswipe - Same Direction

Panola Road Crash Severity (2005-2009)

Collision Type	Number of Crashes	Number of Injuries	% Injuries
Angle	215	71	33%
Head On	13	8	62%
Not A Collision With A Motor Vehicle	7	3	43%
Rear End	232	81	35%
Sideswipe - Opposite Direction	9	3	33%
Sideswipe - Same Direction	79	6	8%
Total	**555**	**172**	**31%**

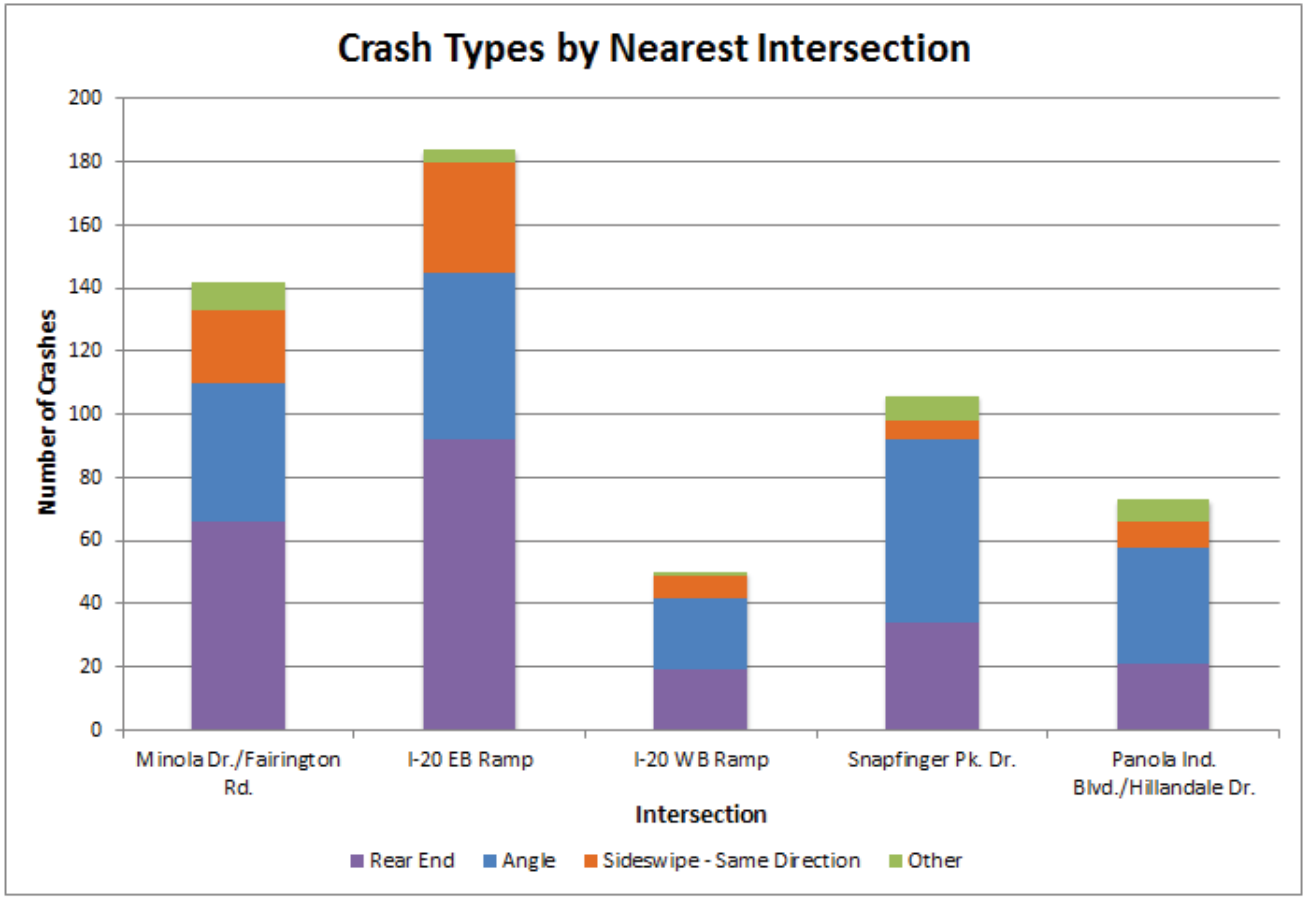
Crash Types by Nearest Intersection
Number of Crashes
200
180
160
140
120
100
80
60
40
20
0
Minola Dr./Fairington Rd.
I-20 EB Ramp
I-20 WB Ramp
Snapfinger Pk. Dr.
Panola Ind. Blvd./Hillandale Dr.
Intersection
Rear End
Angle
Sideswipe - Same Direction
Other

ATTACHMENT 5
TRAFFIC DIAGRAMS

Department of Transportation
State of Georgia

INTERDEPARTMENT CORRESPONDENCE

FILE NHS00-0002-00(868),
CSSTP-0006-00(879), CSSTP-0005-00(905)
P.I. # 0002868, 0006879, 0005905
DeKalb County

OFFICE Planning

DATE March 3, 2015

FROM Cynthia L. VanDyke, State Transportation Planning Administrator

TO Albert Shelby, State Program Delivery Engineer
Attention: Vinesha Pegram P.E.

SUBJECT **Reviewed** Updated Design Traffic for I-20 Panola Road interchange improvements and Panola Road Segments 2 and 3.

As per your request, we reviewed the consultant's Updated Design Traffic for the above project.

The Updated Design Traffic is approved based on the information furnished. If you have any questions concerning this information please contact Daniel R. Funk at (404) 631-1959.

CLV/drf

EXISTING (2014) DHV

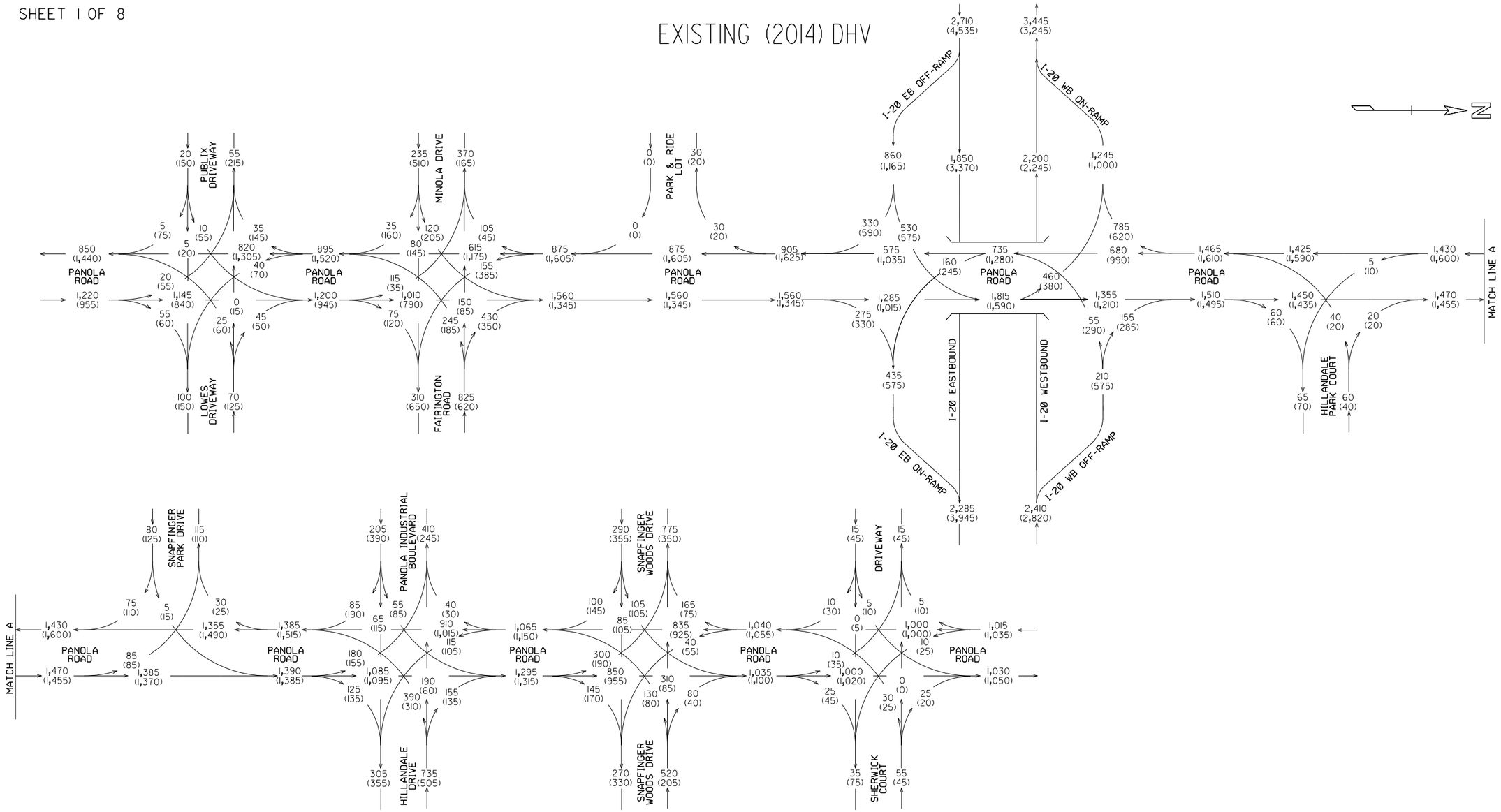

PANOLA ROAD AT I-20 INTERCHANGE IMPROVEMENTS	TRUCK PERCENTAGES:				AM PEAK HOUR = 000 PM PEAK HOUR = (000)
	LOCATION	PK HR T%	S.U. %	COMB %	
	PANOLA ROAD	5%	4%	1%	
	I-20 WB OFF-RAMP	10%	8%	2%	COMPLETED BY: KC CHECKED BY: JP DATE: 01/20/2015
PI NO. 0002868 DEKALB COUNTY	I-20 EB OFF-RAMP	4%	3%	1%	
	I-20 MAINLINE	8%	2%	6%	

ARCADIS
Infrastructure, Water, Environment, Buildings

EXISTING (2014) ADT

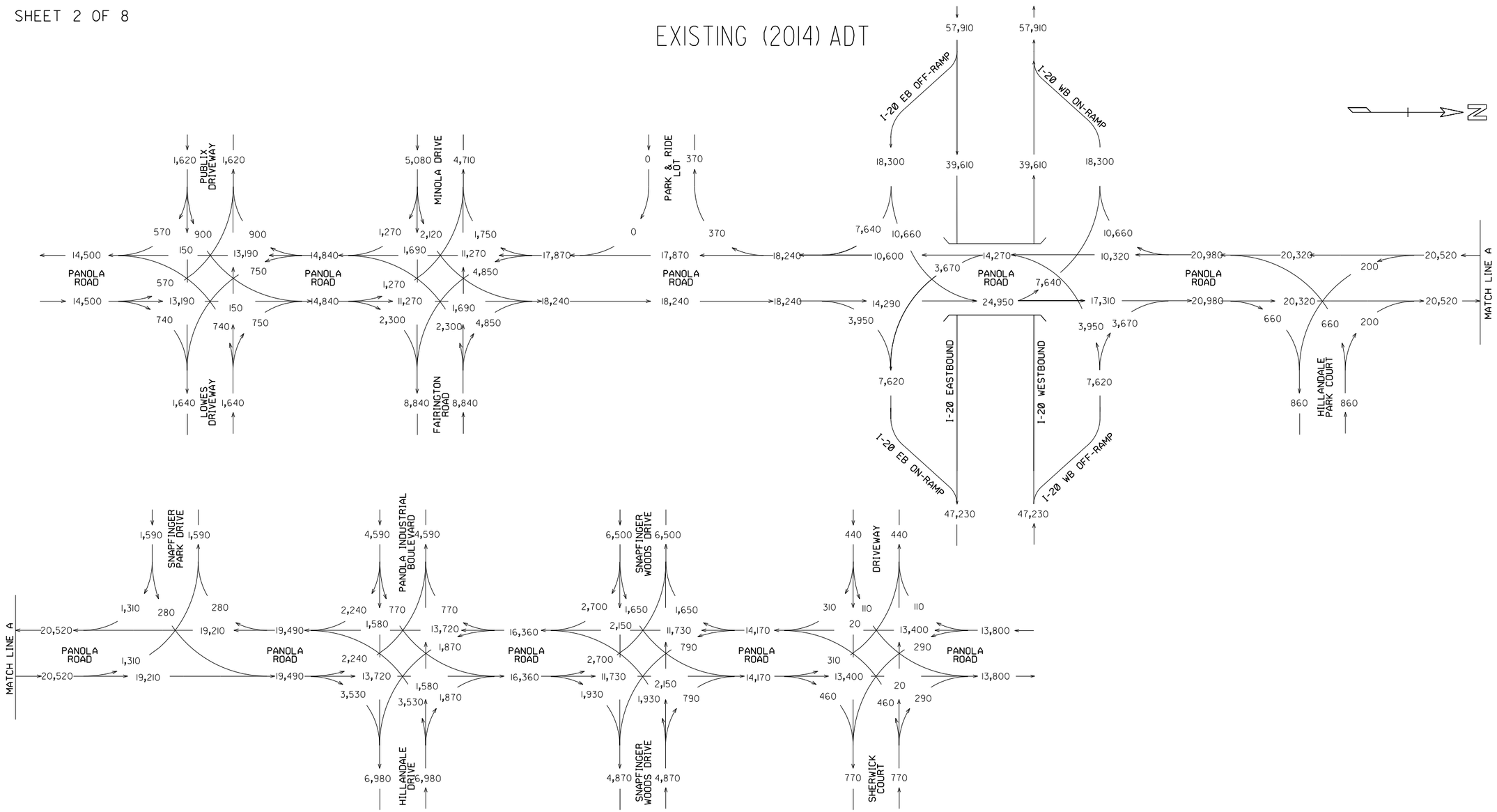

PANOLA ROAD AT I-20 INTERCHANGE IMPROVEMENTS	TRUCK PERCENTAGES:				AVERAGE DAILY TRAFFIC ADT = 000	ARCADIS Infrastructure, Water, Environment, Buildings
	LOCATION	DAILY T%	S.U. %	COMB %		
	PANOLA ROAD	6%	5%	1%		
	I-20 WB OFF-RAMP	7%	6%	1%	COMPLETED BY: KC CHECKED BY: JP DATE: 01/20/2015	
PI NO. 0002868 DEKALB COUNTY	I-20 EB OFF-RAMP	4%	3%	1%		
	I-20 MAINLINE	11%	3%	8%		

OPEN (2020) DHV
NO-BUILD

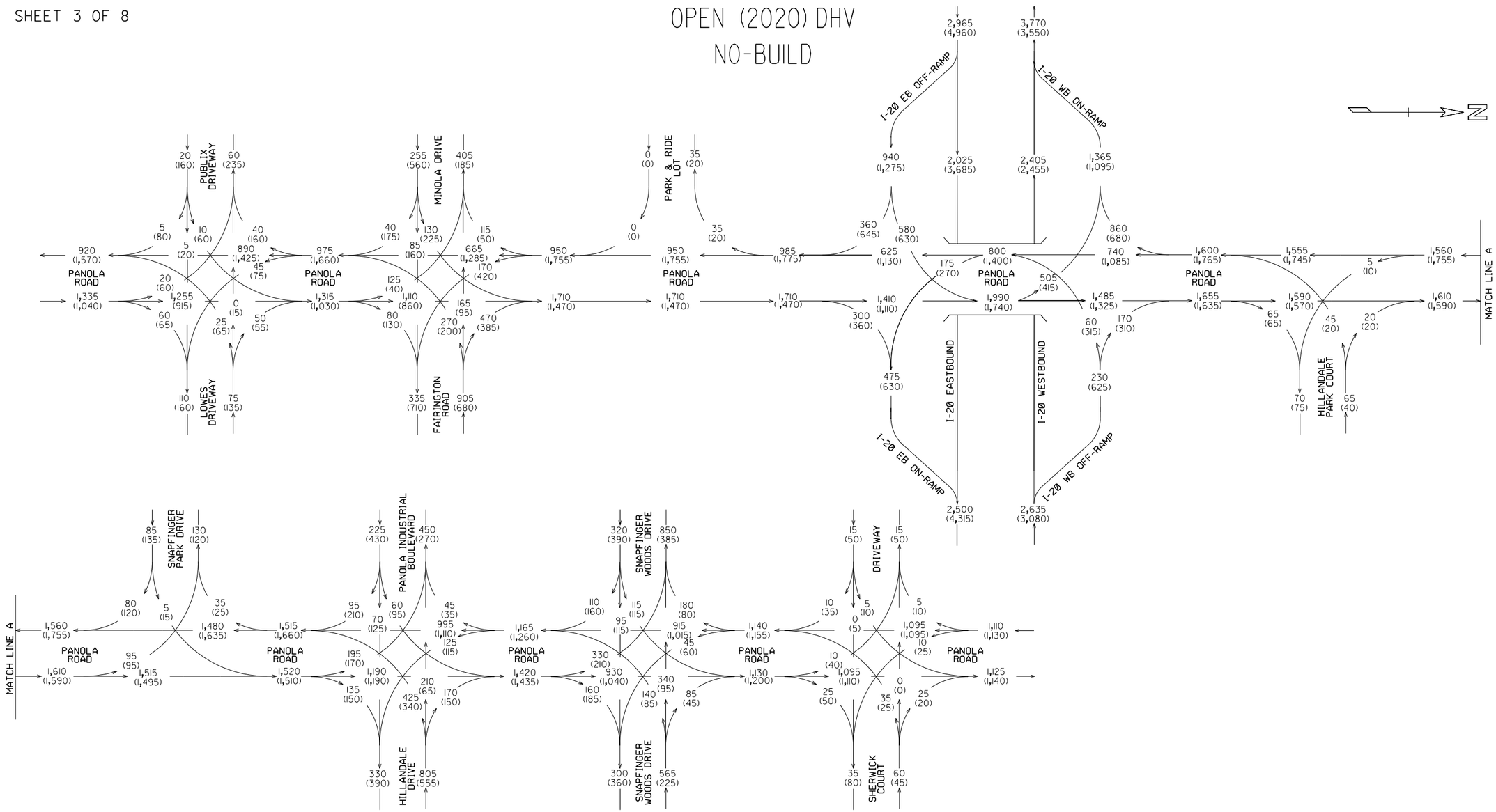

PANOLA ROAD AT I-20 INTERCHANGE IMPROVEMENTS	TRUCK PERCENTAGES:				AM PEAK HOUR = 000 PM PEAK HOUR = (000)
	LOCATION	PK HR T%	S.U. %	COMB %	
	PANOLA ROAD	5%	4%	1%	
	I-20 WB OFF-RAMP	10%	8%	2%	COMPLETED BY: KC CHECKED BY: RV DATE: 02/10/2015
PI NO. 0002868 DEKALB COUNTY	I-20 EB OFF-RAMP	4%	3%	1%	
	I-20 MAINLINE	8%	2%	6%	

ARCADIS
Infrastructure, Water, Environment, Buildings

DESIGN (2040) DHV
NO-BUILD

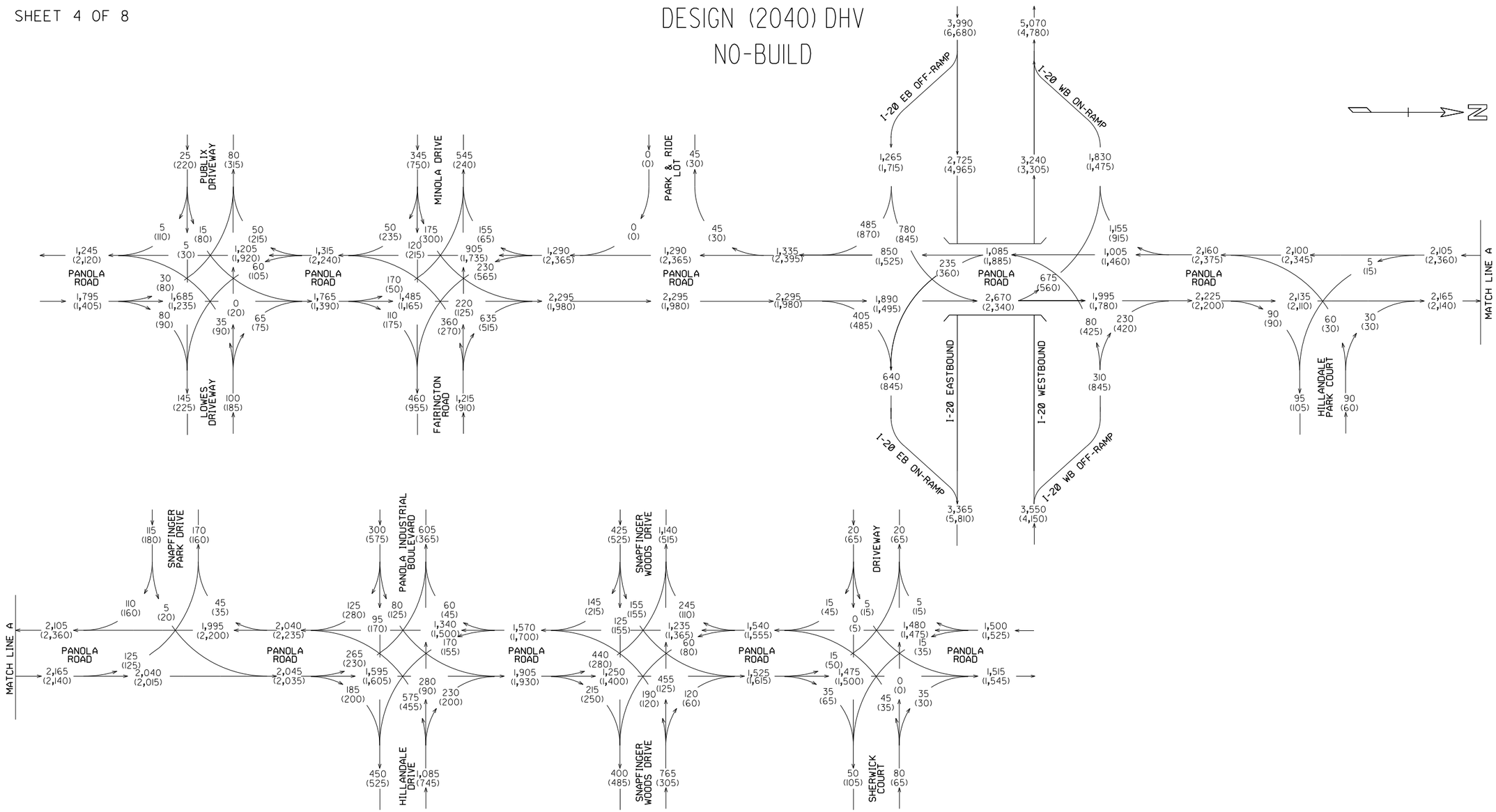

PANOLA ROAD AT I-20 INTERCHANGE IMPROVEMENTS	TRUCK PERCENTAGES:				AM PEAK HOUR = 000 PM PEAK HOUR = (000)	ARCADIS Infrastructure, Water, Environment, Buildings
	LOCATION	PK HR T%	S.U. %	COMB %		
	PANOLA ROAD	5%	4%	1%		
	I-20 WB OFF-RAMP	10%	8%	2%	COMPLETED BY: KC CHECKED BY: RV DATE: 02/10/2015	
PI NO. 0002868 DEKALB COUNTY	I-20 EB OFF-RAMP	4%	3%	1%		
	I-20 MAINLINE	8%	2%	6%		

OPEN (2020)/DESIGN (2040) ADT
NO-BUILD

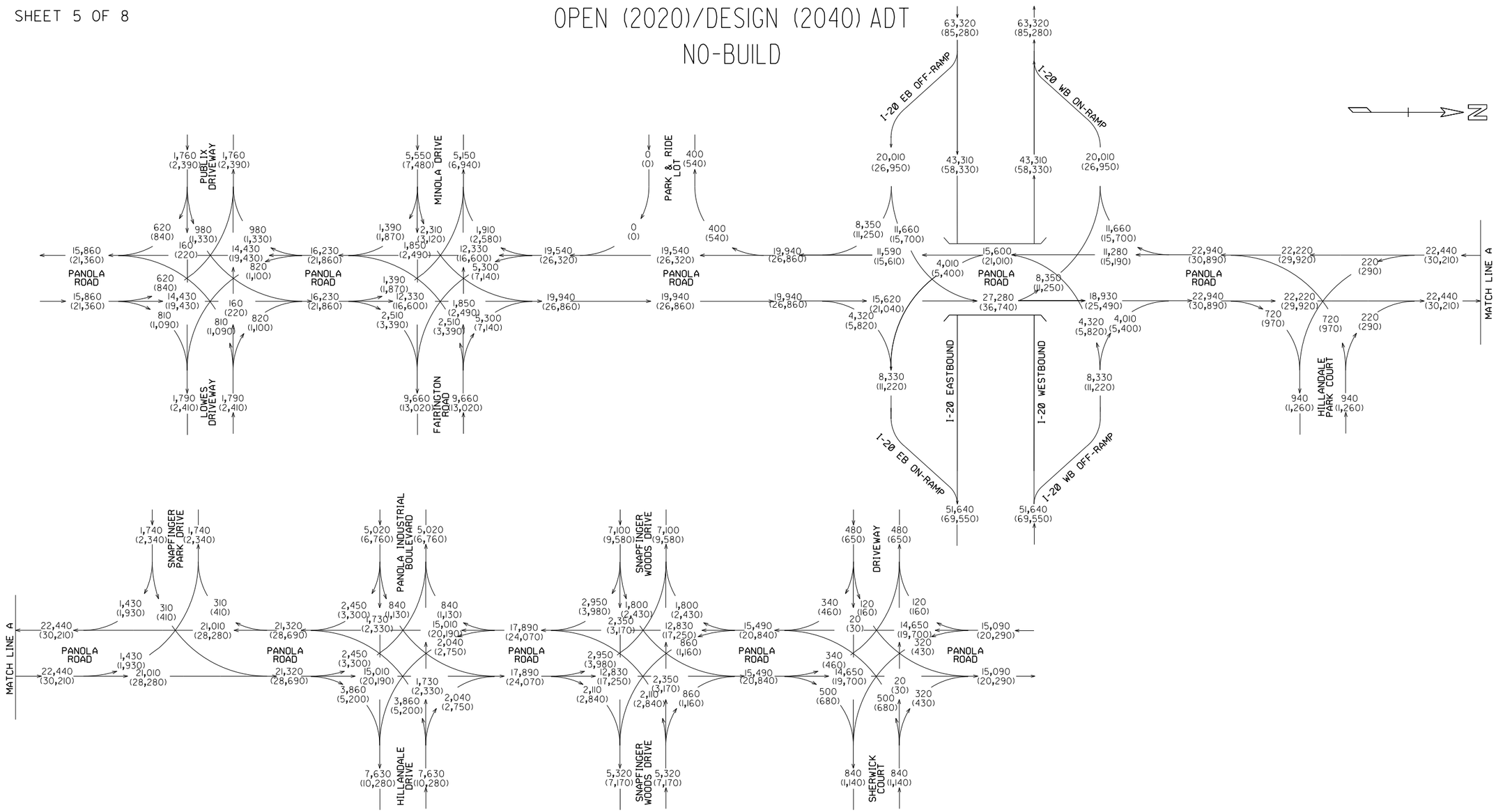

PANOLA ROAD AT I-20 INTERCHANGE IMPROVEMENTS	TRUCK PERCENTAGES:				2020 ADT = 000 2040 ADT = (000)
	LOCATION	DAILY T%	S.U. %	COMB %	
	PANOLA ROAD	6%	5%	1%	
	I-20 WB OFF-RAMP	7%	6%	1%	COMPLETED BY: KC CHECKED BY: RV DATE: 02/10/2015
PI NO. 0002868 DEKALB COUNTY	I-20 EB OFF-RAMP	4%	3%	1%	
	I-20 MAINLINE	11%	3%	8%	

ARCADIS
Infrastructure, Water, Environment, Buildings

OPEN (2020) DHV
BUILD

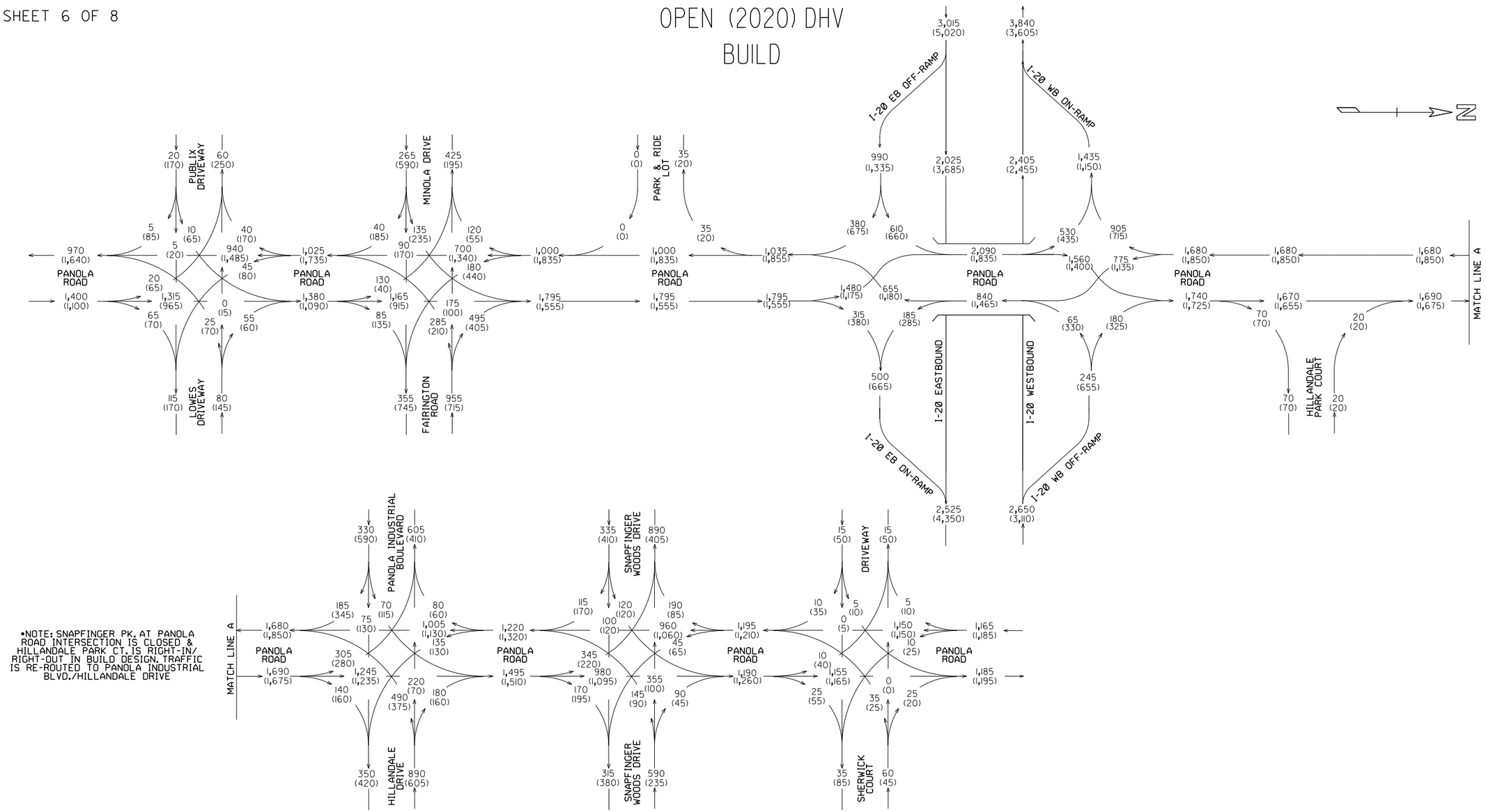

*NOTE: SNAPFINGER PK. AT PANOLA ROAD INTERSECTION IS CLOSED & HILLANDALE PARK CT. IS RIGHT-IN/ RIGHT-OUT IN BUILD DESIGN. TRAFFIC IS RE-ROUTED TO PANOLA INDUSTRIAL BLVD./HILLANDALE DRIVE

	TRUCK PERCENTAGES:				
PANOLA ROAD AT I-20 INTERCHANGE IMPROVEMENTS	LOCATION	PK HR T%	S.U. %	COMB %	AM PEAK HOUR = 000 PM PEAK HOUR = (000)
	PANOLA ROAD	5%	4%	1%	
	I-20 WB OFF-RAMP	10%	8%	2%	COMPLETED BY: KC CHECKED BY: RV DATE: 02/10/2015
PI NO. 0002868 DEKALB COUNTY	I-20 EB OFF-RAMP	4%	3%	1%	
	I-20 MAINLINE	8%	2%	6%	

ARCADIS
Infrastructure, Water, Environment, Buildings

DESIGN (2040) DHV
BUILD

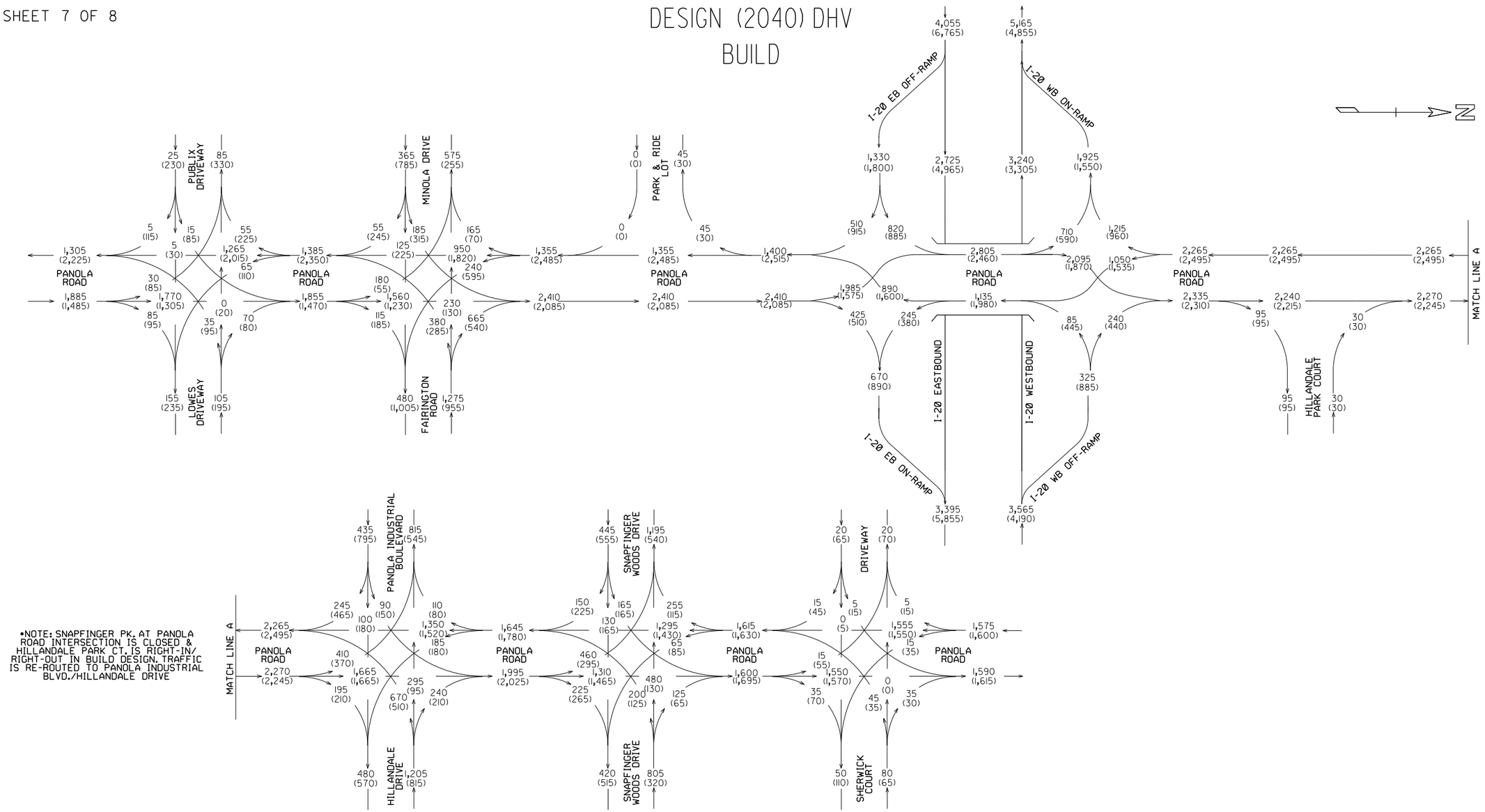

PANOLA ROAD AT I-20 INTERCHANGE IMPROVEMENTS	TRUCK PERCENTAGES:				AM PEAK HOUR = 000 PM PEAK HOUR = (000)	ARCADIS Infrastructure, Water, Environment, Buildings
	LOCATION	PK HR T%	S.U. %	COMB %		
	PANOLA ROAD	5%	4%	1%		
	I-20 WB OFF-RAMP	10%	8%	2%	COMPLETED BY: KC CHECKED BY: RV DATE: 02/10/2015	
PI NO. 0002868 DEKALB COUNTY	I-20 EB OFF-RAMP	4%	3%	1%		
	I-20 MAINLINE	8%	2%	6%		

OPEN (2020)/DESIGN (2040) ADT
BUILD

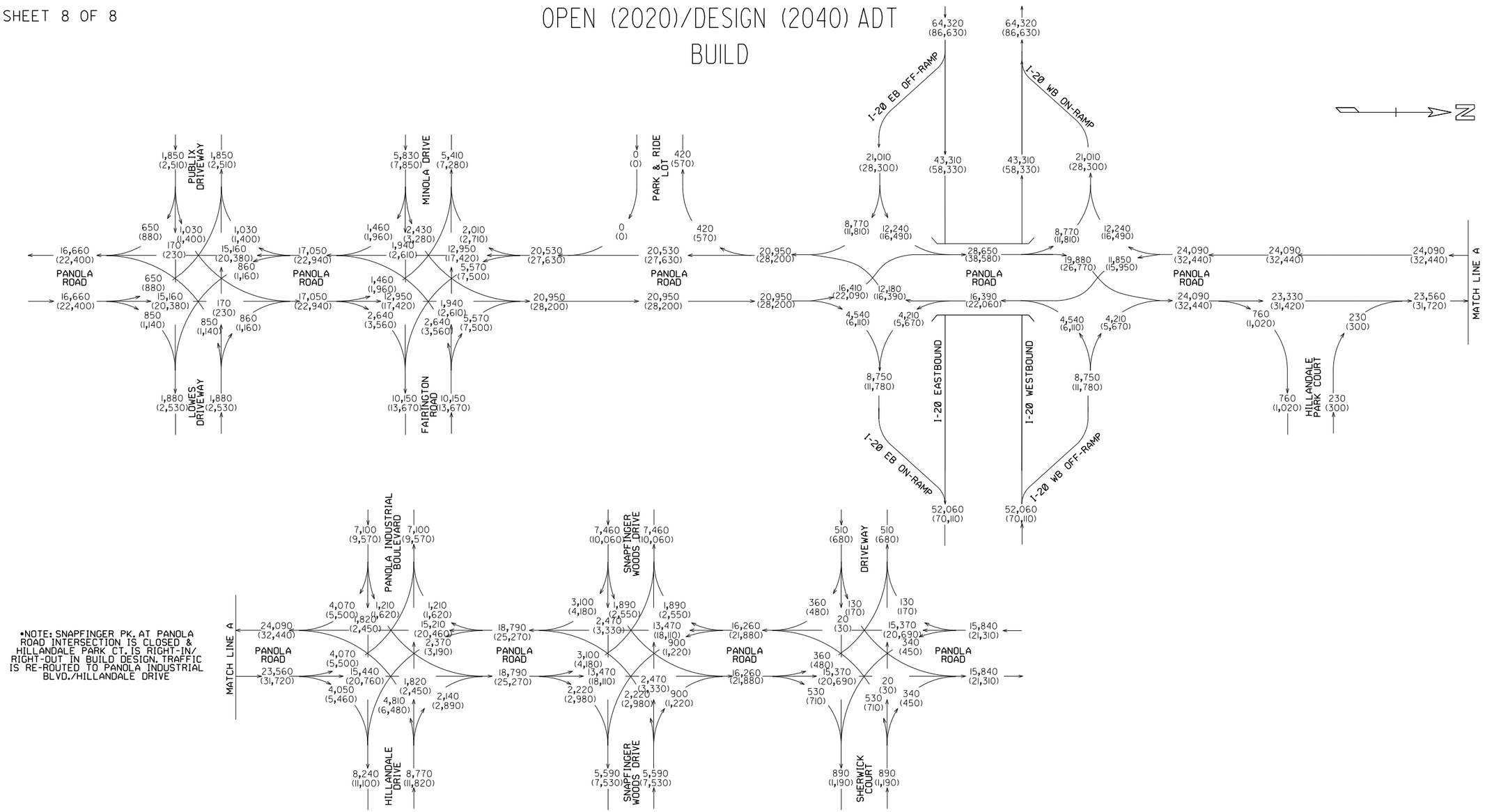

*NOTE: SNAPFINGER PK. AT PANOLA ROAD INTERSECTION IS CLOSED & HILLANDALE PARK CT. IS RIGHT-IN/ RIGHT-OUT IN BUILD DESIGN. TRAFFIC IS RE-ROUTED TO PANOLA INDUSTRIAL BLVD./HILLANDALE DRIVE

	TRUCK PERCENTAGES:				
PANOLA ROAD AT I-20 INTERCHANGE IMPROVEMENTS	LOCATION	DAILY T%	S.U. %	COMB %	2020 ADT = 000 2040 ADT = (000)
	PANOLA ROAD	6%	5%	1%	
	I-20 WB OFF-RAMP	7%	6%	1%	COMPLETED BY: KC CHECKED BY: RV DATE: 02/10/2015
PI NO. 0002868 DEKALB COUNTY	I-20 EB OFF-RAMP	4%	3%	1%	
	I-20 MAINLINE	11%	3%	8%	

ARCADIS
Infrastructure, Water, Environment, Buildings

ATTACHMENT 6

TRAFFIC ANALYSIS SUMMARY

Existing and projected future LOS and Delay along Panola Rd from Synchro

Analysis Date: 5/4/2015

Intersection		2014		2030							
		Existing		No-Build		Build (DDI)		Change in Delay	Build (Diamond)		Change in Delay
		LOS	Delay (sec/veh)	LOS	Delay (sec/veh)	LOS	Delay (sec/veh)		LOS	Delay (sec/veh)	
Snapfinger Woods Dr	AM	D	38.0	D	54.0	D	53.5	-1%	D	53.6	-1%
	PM	C	29.9	D	43.4	D	38.0	-12%	D	38.9	-10%
Panola Industrial Blvd/Hillandale Dr	AM	D	51.2	F	85.9	D	41.5	-52%	D	39.2	-54%
	PM	D	47.9	E	76.0	D	36.1	-53%	C	26.7	-65%
Snapfinger Park Dr[1]	AM	B	11.4	C	20.4	-	-	-	-	-	-
	PM	B	14.7	D	26.8	-	-	-	-	-	-
Hillandale Park Ct[1,2]	AM	F	-	F	62.0	-	-	-	-	-	-
	PM	C	20.4	C	18.7	-	-	-	-	-	-
WB Ramps	AM	C	21.3	D	35.3	C	30.1	-15%	B	15.8	-55%
	PM	C	32.8	D	39.6	C	29.2	-26%	C	25.5	-36%
EB Ramps	AM	C	23.0	C	29.2	B	16.6	-43%	C	23.7	-19%
	PM	D	38.4	D	47.0	C	22.8	-51%	C	26.6	-43%
Park & Ride[2]	AM	-	-	-	-	-	-	-	-	-	-
	PM	-	-	-	-	-	-	-	-	-	-
Minola Dr/Fairington Rd	AM	D	47.4	E	61.2	D	37.5	-39%	D	37.5	-39%
	PM	D	47.6	E	69.9	D	37.9	-46%	D	37.1	-47%

(1) Maximum sidestreet delay reported for unsignalized intersections

(2) HCM methodology does not develop delays for Right-in/Right-out driveways

Legend	
	-XX% (Reduced)
	+XX% (Increased)

Travel Time and Vehicular Throughput Summary

Travel Time Endpoint Locations:

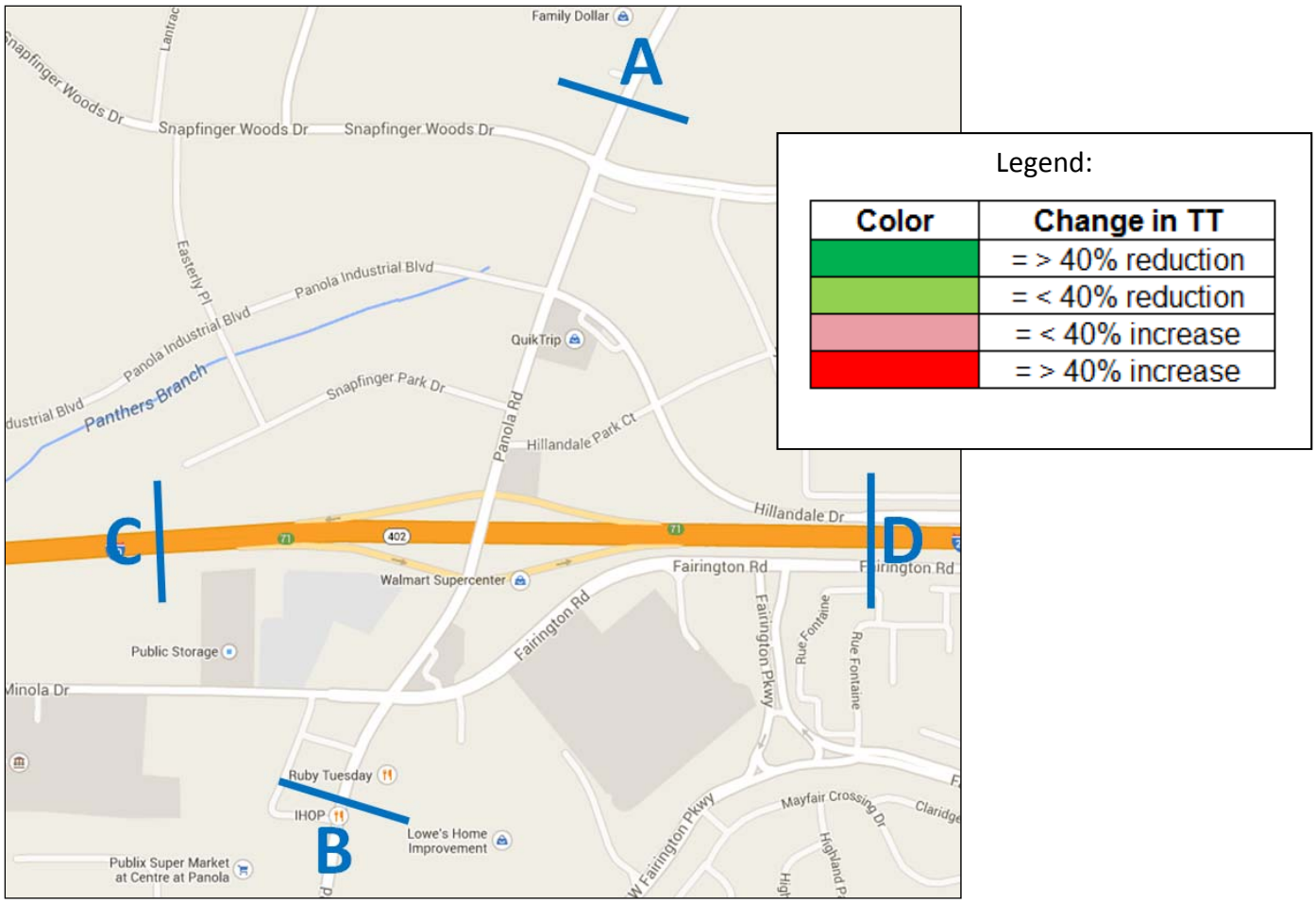

AM Peak Hour Travel Times:

Travel Time Segment	Distance (miles)	Existing Year (2014)	Interim Year (2030)				
			No-Build	DDI		Diamond	
		Travel Time (minutes)	Travel Time (minutes)	Travel Time (minutes)	Change in Travel Time	Travel Time (minutes)	Change in Travel Time
A to B	0.7	2.5	1.7	2.0	24%	1.5	-7%
A to D	1.0	4.1	3.7	1.8	-51%	3.6	0%
A to C	0.8	7.3	5.4	15.3	182%	14.1	162%
B to A	0.7	2.2	4.0	2.5	-36%	3.5	-12%
B to D	0.8	1.6	2.6	1.7	-36%	2.8	5%
B to C	0.8	7.8	15.3	4.1	-73%	15.5	1%
C to A	0.9	3.3	3.3	3.3	0%	3.0	-8%
C to B	0.7	1.5	1.5	1.5	-1%	1.6	4%
D to A	0.8	2.6	3.1	3.7	20%	2.8	-10%
D to B	0.8	3.6	4.2	3.7	-11%	3.7	-12%

Travel Time Endpoint Locations:

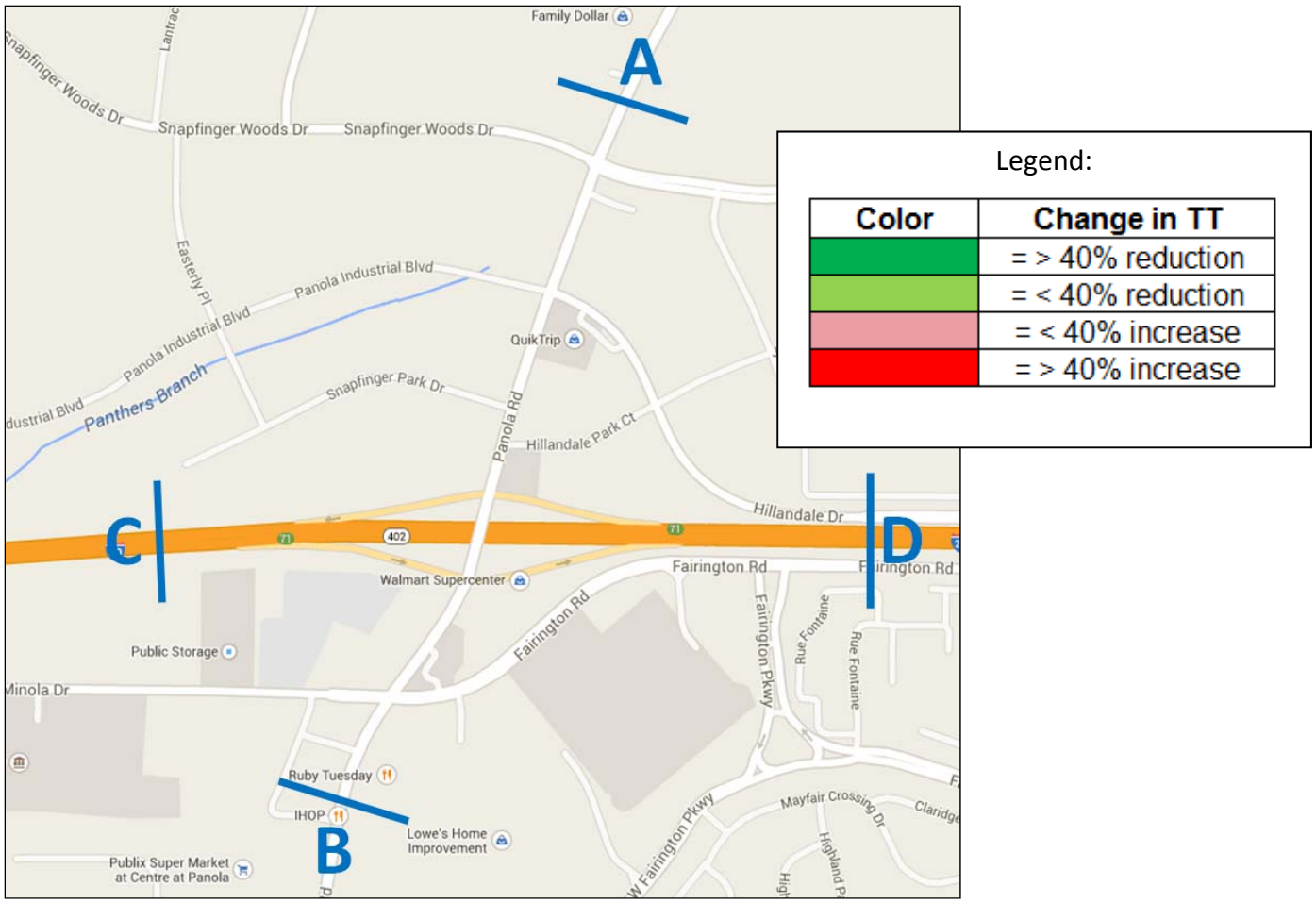

PM Peak Hour Travel Times:

Travel Time Segment	Distance (miles)	Existing Year (2014)	Interim Year (2030)				
			No-Build	DDI		Diamond	
		Travel Time (minutes)	Travel Time (minutes)	Travel Time (minutes)	Change in Travel Time	Travel Time (minutes)	Change in Travel Time
A to B	0.7	1.7	1.7	2.0	17%	1.8	2%
A to D	1.0	2.6	3.7	2.1	-43%	2.6	-31%
A to C	0.8	1.8	1.8	1.8	0%	1.6	-13%
B to A	0.7	2.3	3.5	1.8	-49%	2.5	-30%
B to D	0.8	1.9	2.0	2.0	0%	1.8	-8%
B to C	0.8	3.9	3.9	1.9	-52%	2.4	-38%
C to A	0.9	3.2	4.3	2.5	-41%	2.5	-41%
C to B	0.7	3.7	2.2	1.8	-17%	2.1	-5%
D to A	0.8	1.9	2.6	3.3	25%	2.3	-12%
D to B	0.8	2.6	3.8	2.1	-45%	2.9	-23%

Interchange Throughput Location:

2030 Interchange Throughput:

Scenario	AM Throughput	PM Throughput
No-Build	4,215	4,691
DDI	4,856	6,053
Diamond	4,343	5,879

ATTACHMENT 7
PAVEMENT STUDIES

DEPARTMENT OF TRANSPORTATION
STATE OF GEORGIA

INTERDEPARTMENTAL CORRESPONDENCE

FILE NHS00-0002-00(868) DeKalb County
PI No. 0002868
Panola Road @ I-20
D.E.T.Fo

OFFICE Materials & Testing
Forest Park, Georgia
DATE January 23, 2014

FROM Charles A. Hasty, P.E., State Materials Engineer

TO Genetha Rice-Singleton, Office of Program Delivery
Attention: Vinesha Pegram, Project Manager

SUBJECT **Preliminary Pavement Evaluation Summary**
Panola Road at I-20 from Fairington Road to Snapfinger Woods Drive

As requested, a Preliminary Pavement Evaluation Summary has been performed on the aforementioned project. The results of this work are attached.

If additional information is needed, please contact Eugene Utsalo of the Geotechnical Environmental Pavement Bureau at (404) 608-4775.

CAH: EUU
Attachments
Full-Depth Flexible Design
Full-Depth Rigid Design
Project Location Map

cc: Rachel Brown, District Engineer, Chamblee
Ira Witherspoon, Area Engineer, Decatur

File

PRELIMINARY PAVEMENT EVALUATION SUMMARY
For

NHS00-0002-00(868) DeKalb County
PI No. 0002868

1. *LOCATION / DESCRIPTION*

This project is the proposed widening and realignment of Panola Road (County Road 5150) and the Bridge over I-20. The proposed construction would consist of 12-ft through lanes (three northbound and three southbound), a variable 8-ft to 32-ft raised center median, 4-ft bike lanes, and a 12-ft urban shoulder with 5-ft sidewalks. Exclusive right-turn lanes would be provided onto the I-20 on-ramps in each direction. In addition, dual left-turn lanes and a separate right-turn lane would be provided on Panola Road at the Fairington Road/Minola Drive, Panola Industrial Boulevard/Hillandale Drive, and Snapfinger Woods Drive intersections. The Panola Road Bridge over I-20 would be reconstructed to the west of its current. The proposed typical section at the bridge would consist of five 12-ft northbound lanes (three through lanes and two left-turn lanes), four 12-ft southbound lanes (two through lanes and two left-turn lanes), an 8-ft raised center median, two 5-ft-6-inch sidewalks, and two 4-ft bike lanes. This project begins at Fairington Road/Minola Drive and continues north to Snapfinger Woods Drive for a total of 0.6 mile. The project is located west of the city limits of Lithonia in DeKalb County within the following mileposts:

Milepost	Location
3.6 ± to 4.2±	Panola Road (CR 5150)

2. *PAVEMENT CONDITION SUMMARY*

The existing pavement on Panola Road, north of I-20 is in fair to poor visual condition within the limits of the project. The most pavement distresses observed were between the Panola Road/I-20 Intersection and Hillandale Drive/Panola Industrial Boulevard. On Panola Road, south of I-20, the existing pavement is in good visual condition. A small section of the roadway exhibited distresses during the field investigation of this project on December 31, 2013. Please see Section 7: *Pavement Distresses* for more information.

3. *PAVEMENT RECOMMENDATION SUMMARY*

The full-depth pavement recommendation is shown in Section 4: *Full-Depth Section*. No overlay and/or existing pavement rehabilitation recommendations are provided at this time. Overlay and/or existing pavement rehabilitation recommendations will be provided when a full-scale field work is completed and the existing pavement thickness is known.

4. *FULL-DEPTH SECTION*

The following full-depth pavement section is recommendation for the proposed widening and new additions on Panola Road. This recommendation is preliminary and subject to change.

Panola Road - Full-Depth for Widening/New Areas				
Pay Item Number	**Material**	**Course**	**Thickness**	**Spread Rate**
402-3600	12.5 mm SMA	Surface	1.5 inches	165 lbs/yd^2
402-3190	19 mm Superpave	Binder	2 inches	220 lbs/yd^2
402-3121	25 mm Superpave	Asphalt Base	8 inches	880 lbs/yd^2
310-1101	Graded Aggregate Base	Base	14 inches	N/A

The following full-depth rigid pavement section is recommended for the proposed construction of the I-20 ramps. This recommendation is preliminary and subject to change.

I-20 Ramps Construction & Relocation				
Pay Item Number	**Material**	**Course**	**Thickness**	**Spread Rate**
439-0024	Plain PC Concrete Pavement	Surface	11 inches	N/A
402-3190	19 mm Superpave	Asphalt Interlayer	3 inches	330 lbs/yd^2
310-1101	Graded Aggregate Base	Base	12 inches	N/A

5. *OVERLAY SECTIONS*

No overlay recommendations are available at this time. The overlay or existing pavement recommendations will be provided when a complete pavement evaluation summary is completed for this project.

6. *CORES*

Cores have not been recovered on these projects. Therefore, no core information is available at this time.

7. *PAVEMENT DISTRESSES*

Except for the following, no other distresses were encountered during the field investigation of this project:

Load Cracking	A few areas of level 1 load cracks were observed between Hillandale Drive and Snapfinger Woods Drive and also between I-20 and Fairington Road. Also, levels 2 & 3 load cracks were observed between I-20 and Hillandale Drive.
Block/ Transverse Cracking	Level 1 block cracks were observed between Hillandale Drive and Snapfinger Woods Drive and also between I-20 and Fairington Road. Also, levels 2 & 3 load cracks were observed between I-20 and Hillandale Drive.
Potholes/Local Base Failures	A few areas of potholes or local base failures were observed between the I-20 and Hillandale Drive.

8. *COPACES*

COPACES data are not available for county roads; therefore, this information is not included with this report.

9. *OTHER INFORMATION*

- This is a preliminary pavement evaluation request. No core samples were recovered during the field work of these projects.
- The pavement design recommendations may be revised if updated traffic data is available at the time a complete pavement evaluation work is being performed.

Reported By: **Eugene Utsalo, P.E.**

Reviewed By: _____

A. J. Jubran, P. E.
State Pavement Engineer

Flexible Pavement Design Analysis

PI Number	0002868	**County(s)**	DeKalb (south)
Project Number	NHS00-0002-00(868)	**Design Name**	Panola Road Full-Depth
Project Description	Panola Road at I-20 from Fairington Road to Snapfinger Woods Drive		

Traffic Data (AADTs are one-way)						**Miscellaneous Data**	
Initial Design Year	2020	**Initial AADT, VPD**	26,905	**24 Hour Truck %**	9.60	**Lanes in one direction**	3
Final Design Year	2040	**Final AADT, VPD**	36,240	**SU Truck %**	7.50	**Curb & Gutter/Barrier**	Yes
		Mean AADT, VPD	31,573	**MU Truck %**	2.10		

Design Data					
Lane Distribution Factor (%)	80.00	**Soil Support Value**	2.00	**Single Unit ESAL**	0.40
Terminal Serviceability Index	2.50	**Regional Factor**	1.60	**Multiple Unit ESAL**	1.50
		User Defined 18-KIP ESAL	0.00	**Calculated 18-KIP ESAL**	0.64
Non-Standard Value Comment					

Design Loading (Calculated 18-KIP ESAL)					
Mean AADT, VPD	**LDF (%)**	**Vehicle Type**	**Volume (%)**	**ESAL Factor**	**Daily ESAL**
31,573	80.00	Single Unit Truck	7.50	0.40	758
		Multi Unit Truck	2.10	1.50	796
				Total Daily ESALs	1,554
				Total Design Period ESALs	11,344,200

Proposed Flexible Full Depth Pavement Structure				
Course	**Material**	**Thickness (inches)**	**Structural Coefficient**	**Structural Value**
Course 1	12.5 mm SMA	1.50	0.4400	0.66
Course 2	19 mm Superpave	2.00	0.4400	0.88
Course 3	25 mm Superpave	1.00	0.4400	0.44
		7.00	0.3000	2.10
Course 4	Graded Aggregate Base	14.00	0.1600	2.24

Required SN	6.71	**Proposed pavement is 5.88% Underdesigned**	**Proposed SN**	6.32

Design Remarks	Panola Road: Full-depth for Widening/new additions

Prepared By Greene Scott 1/8/2014 11:57 AM

Pavement Test Engineer **Date**

Recommended By

State Roadway Design Engineer **Date**

Approved By

State Pavement Engineer **Date**

Filename: R:\PavementDesign\Project\PMB Active Projects\Counties - A thru E\DeKalb\0002868PPES\Designs_&_Reports\0002868DZN.xlsm
GDOT Pavement Design Tool - Version 2.0

Rigid Pavement Design Analysis

PI Number	0002868	**County(s)**	DeKalb (south)
Project Number	NHS00-0002-00(868)	**Design Name**	Panola Road at I-20
Project Description	Panola Road at I-20 from Fairington Road to Snapfinger Woods Drive		
Section Location	I-20 Ramps	**Type Section**	JPCP

Begin Section Station	++++	**End Section Station**	++++	**Section Length**	++++

Traffic Data (AADTs are one-way)						**Miscellaneous Data**	
Initial Design Year	2020	**Initial AADT, VPD**	23,965	**24 Hour Truck %**	9.60	**Lanes in one direction**	1
Final Design Year	2040	**Final AADT, VPD**	32,275	**SU Truck %**	7.50	**Curb & Gutter/Barrier**	No
		Mean AADT, VPD	28,120	**MU Truck %**	2.10	**Interstate**	Yes

Design Loading (Calculated 18-KIP ESAL)

Mean AADT, VPD	**LDF (%)**	**Vehicle Type**	**Volume (%)**	**ESAL Factor**	**Daily ESAL**
28,120	100	Other Vehicles	90.40	0.004	102
		Single Unit Truck	7.50	0.500	1,055
		Multi Unit Truck	2.10	2.680	1,583
				Total Daily ESALs	2,740
				Total Design Period ESALs	20,002,000

Design Data

Terminal Serviceability Index (P_t)	2.50	**Working Stress (psi)**	450	**Modulus of Elasticity (psi)**	3,200,000		
Soil Support Value	2.00	**Subgrade Modulus (k)**	110	**Subbase Modulus (k_1)**	210	**Subbase Modulus (k_{eff})**	260
Trial Depth of PCC Pavement (inches)	11.00	**Calculated Stress from Equation (psi)**	461.81				
% Overstressed	2.63	**% Underdesigned**	2.56	**Balanced Thickness (inches)**	11.16		
Non-Standard Value Comment							

Proposed Rigid Pavement Structure

Material	**Thickness (inches)**
JPCP - Jointed Portland Cement Concrete Pavement	11.00
19 mm Superpave Asphaltic Concrete Interlayer	3.00
Graded Aggregate Base	12.00

JPCP - Dowel Bar Size and Spacing

Refer to GDOT Standard 5046H:
Joint Details for Portland Cement Concrete Paving

Design Remarks	I-20 Ramps: New construction & Relocation

Prepared By Grene Tsoko 1/8/2014 11:57 AM

Pavement Test Engineer **Date**

Recommended By

State Roadway Design Engineer **Date**

Approved By

State Pavement Engineer **Date**

Filename: R:\PavementDesign\Project\PMB Active Projects\Counties - A thru E\DeKalb\0002868PPES\Designs_&_Reports\0002868DZN.xlsm
GDOT Pavement Design Tool - Version 2.0

PROJECT LOCATION

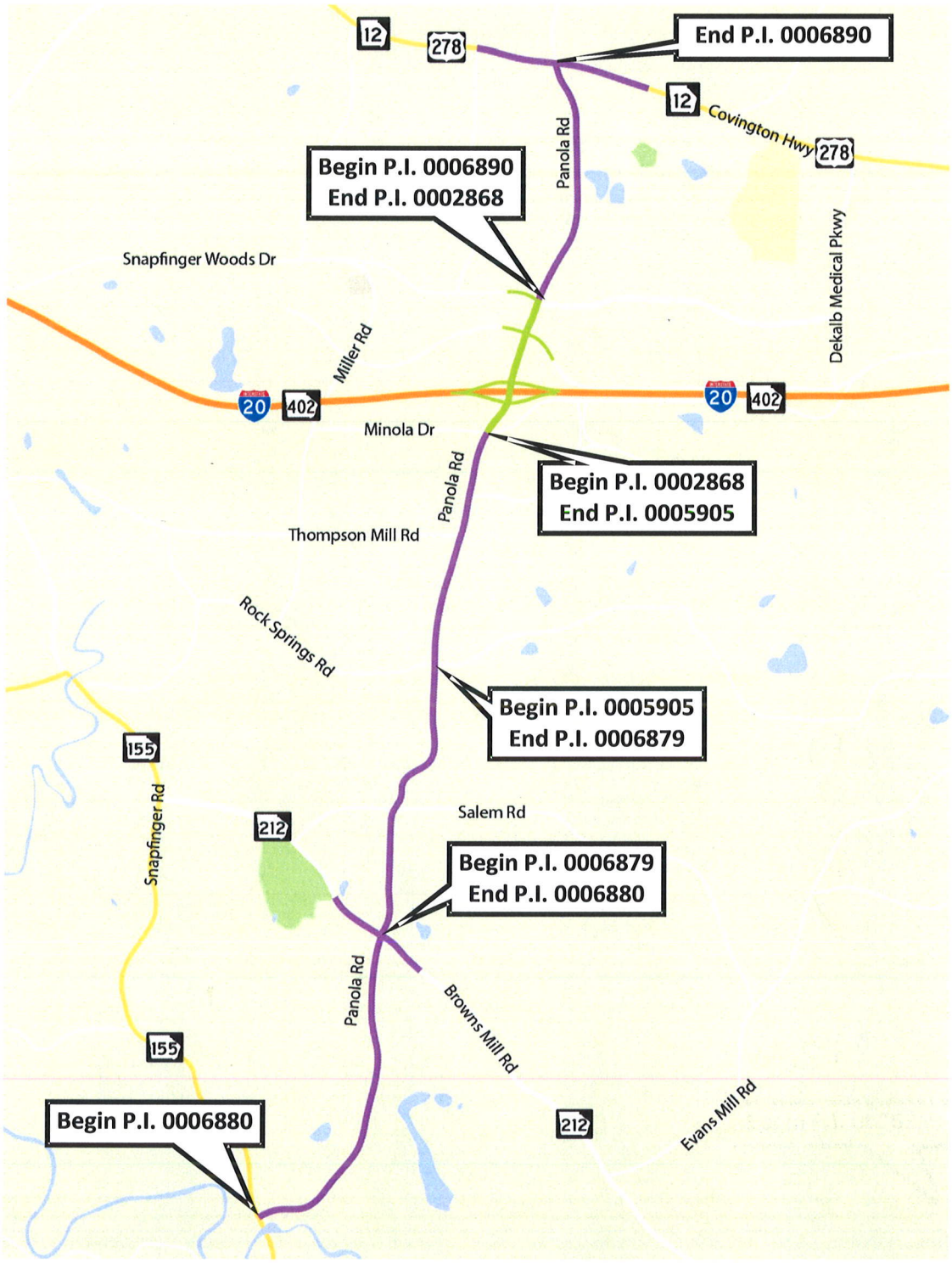

Not to Scale

DEPARTMENT OF TRANSPORTATION
STATE OF GEORGIA

INTERDEPARTMENTAL CORRESPONDENCE

FILE NHS00-0002-00(868) DeKalb County
PI No. 0002868
Panola Road @ I-20

OFFICE Materials & Testing
Forest Park, Georgia

DATE February 17, 2014

D.E.T. for

FROM Charles A. Hasty, P.E., State Materials Engineer

TO Genetha Rice-Singleton, Office of Program Delivery
Attention: Vinesha Pegram, Project Manager

SUBJECT **Life Cycle Cost Analysis and Pavement Type Selection Recommendation**
Panola Road at I-20 from Fairington Road to Snapfinger Woods Drive

The Office of Materials and Testing (OMAT) has completed the Life Cycle Cost Analysis and Pavement Type Selection (PTS) Recommendation for the above referenced project.

Project Description and Location

This project is the proposed widening and realignment of Panola Road (County Road 5150) and the Bridge over I-20. The proposed construction would consist of 12-ft through lanes (three northbound and three southbound). This project begins at Fairington Road/Minola Drive and continues north to Snapfinger Woods Drive for a total of 0.6 mile. The project is located west of the city limits of Lithonia in DeKalb County.

Pavement Design Alternatives Considered

The LCCA analyzed the costs of the project by comparing two alternative pavement types. Alternative 'A' uses full-depth Hot Mix Asphalt (HMA) pavement, while Alternative 'B' uses full-depth Portland Cement Concrete (PCC) pavement.

Pavement Type Recommendation

The PTS concludes that there is no preferred alternative, considering the economics of construction costs, maintenance costs, pavement performance and other factors over the analysis period. The OMAT recommends that the existing pavement type be matched.

The alternates are listed in Table 1.

Table 1: Pavement Design Alternatives

Design Alternates	Profile	Surface	Intermediate (Binder)	Base	Subbase
Alternate A, (Full-Depth HMA)	Mainline	12.5 mm Superpave Polymer-Modified (1.50")	19 mm Superpave (2.00")	25 mm Superpave (8.00")	Graded Aggregate Base (14.00")
Alternate B, (Full-Depth PCC)	Mainline	PCC (11.00")	19 mm Superpave (0.00)	---	Graded Aggregate Base (10.00")

The LCCA is based on the following:

- Staging costs and durations for staging were *not* considered.
- Discount Rate of 3 %.
- The analysis periods were 40 years and 50 years. Recommendations were based on the 40-year analysis.
- The service life prior to first major maintenance activities were as follows:
    - 10 years for Asphaltic Concrete Pavements (AC)
    - 20 years for Portland Cement Concrete Pavements (PCC)
- Deterministic approach to LCCA is based on the guidelines in the following document:
    - Federal Highway Administration Publication No. FHWA-SA-98-079, "Life-Cycle Cost Analysis in Pavement Design."
- Average Plant Production rates were determined from historical project information within the Georgia Department of Transportation. They are:
    - Asphalt Concrete plant production rate of 200 tons per hour.
    - Ready Mix Concrete plant production rate of 6000 square yards per day in addition to the following:
        - A 4000 linear feet of paving for a 12-foot wide lane
        - A 2500 linear feet of paving for a 24-foot wide lane

Tables 2 and 3 summarize the total Agency Costs and User Costs respectively.

Table 2: Agency Costs

Design Alternates	Agency Costs		Total Costs
	Initial Agency Costs (A)	Future Maintenance Costs (B)	(A)+ (B)
Alternate A, Full-Depth HMA	$1,577,700	$416,309	$1,994,009
Alternate B, Full-Depth PCC	$1,848,338	$349,030	$2,197,368

Table 3: User Costs

Design Alternates	User Costs		Total Costs
	Initial User * Costs (A)	Future User Costs (B)	(A) + (B)
Alternate A, Full-Depth HMA	0	$86,152	$86,152
Alternate B, Full-Depth PCC	0	$25,748	$25,748

* *For analysis purposes the initial user cost has been set at zero because both pavement alternatives will have comparable impact.*

Table 4 summarizes the Total Scores and Ranking from the Decision Matrix. The scores were determined from the LCCA using a 40-year Analysis Period.

Table 4: Total Score

Design Alternates	Rank	Total Score
Alternate B, Full-Depth PCC	1	89.9
Alternate A, Full-Depth HMA	2	87.3

The detailed analysis is on file and available on request. If additional information is needed, please contact Palliambil Geetha of the Geotechnical Environmental Pavement Bureau at (404) 608-4774.

CAH: PRG

Attachments

1. Flexible Pavement Design
2. Rigid Pavement Design
3. Decision Matrix

Copy: File

Flexible Pavement Design Analysis

PI Number	0002868	**County(s)**	DeKalb (south)
Project Number	NHS00-0002-00(868)	**Design Name**	Panola Road Full-Depth
Project Description	Panola Road at I-20 from Fairington Road to Snapfinger Woods Drive		

Traffic Data (AADTs are one-way)						**Miscellaneous Data**	
Initial Design Year	2020	**Initial AADT, VPD**	26,905	**24 Hour Truck %**	9.60	**Lanes in one direction**	3
Final Design Year	2040	**Final AADT, VPD**	36,240	**SU Truck %**	7.50	**Curb & Gutter/Barrier**	Yes
		Mean AADT, VPD	31,573	**MU Truck %**	2.10		

Design Data					
Lane Distribution Factor (%)	80.00	**Soil Support Value**	2.00	**Single Unit ESAL**	0.40
Terminal Serviceability Index	2.50	**Regional Factor**	1.60	**Multiple Unit ESAL**	1.50
		User Defined 18-KIP ESAL	0.00	**Calculated 18-KIP ESAL**	0.64
Non-Standard Value Comment					

Design Loading (Calculated 18-KIP ESAL)					
Mean AADT, VPD	**LDF (%)**	**Vehicle Type**	**Volume (%)**	**ESAL Factor**	**Daily ESAL**
31,573	80.00	Single Unit Truck	7.50	0.40	758
		Multi Unit Truck	2.10	1.50	796
				Total Daily ESALs	1,554
				Total Design Period ESALs	11,344,200

Proposed Flexible Full Depth Pavement Structure				
Course	**Material**	**Thickness (inches)**	**Structural Coefficient**	**Structural Value**
Course 1	12.5 mm Superpave, Polymer Modified	1.50	0.4400	0.66
Course 2	19 mm Superpave	2.00	0.4400	0.88
Course 3	25 mm Superpave	1.00	0.4400	0.44
		7.00	0.3000	2.10
Course 4	Graded Aggregate Base	14.00	0.1600	2.24

Required SN	6.71	**Proposed pavement is 5.88% Underdesigned**	**Proposed SN**	6.32

Design Remarks	Panola Road: Full-depth for Widening/new additions

Prepared By 1/31/2014 3:00 PM

Pavement Test Engineer **Date**

Recommended By

State Roadway Design Engineer **Date**

Approved By

State Pavement Engineer **Date**

Filename: R:\PavementDesign\Project\PMB Active Projects\Counties - A thru E\DeKalb\0002868 PTS\Designs_&_Reports\0002868DESIGN.xlsm
GDOT Pavement Design Tool - Version 2.0

Rigid Pavement Design Analysis

PI Number	0002868		**County(s)**	DeKalb (south)	
Project Number	NHS00-0002-00(868)		**Design Name**	Panola Road at I-20	
Project Description	Panola Road at I-20 from Fairington Road to Snapfinger Woods Drive				
Section Location	Panola Road			**Type Section**	JPCP
Begin Section Station	++++	**End Section Station**	++++	**Section Length**	++++

Traffic Data (AADTs are one-way)						**Miscellaneous Data**	
Initial Design Year	2020	**Initial AADT, VPD**	26,905	**24 Hour Truck %**	9.60	**Lanes in one direction**	1
Final Design Year	2040	**Final AADT, VPD**	36,240	**SU Truck %**	7.50	**Curb & Gutter/Barrier**	Yes
		Mean AADT, VPD	31,573	**MU Truck %**	2.10	**Interstate**	No

Design Loading (Calculated 18-KIP ESAL)

Mean AADT, VPD	**LDF (%)**	**Vehicle Type**	**Volume (%)**	**ESAL Factor**	**Daily ESAL**
31,573	80	Other Vehicles	90.40	0.004	92
		Single Unit Truck	7.50	0.500	948
		Multi Unit Truck	2.10	2.680	1,422
				Total Daily ESALs	2,462
				Total Design Period ESALs	17,972,600

Design Data

Terminal Serviceability Index (P_t)	2.50	**Working Stress (psi)**	450	**Modulus of Elasticity (psi)**	3,200,000		
Soil Support Value	2.00	**Subgrade Modulus (k)**	110	**Subbase Modulus (k_1)**	175	**Subbase Modulus (k_{eff})**	175
Trial Depth of PCC Pavement (inches)	11.00	**Calculated Stress from Equation (psi)**	464.78				
% Overstressed	3.28	**% Underdesigned**	3.18	**Balanced Thickness (inches)**	11.19		
Non-Standard Value Comment							

Proposed Rigid Pavement Structure

Material	**Thickness (inches)**
JPCP - Jointed Portland Cement Concrete Pavement	11.00
19 mm Superpave Asphaltic Concrete Interlayer	0.00
Graded Aggregate Base	10.00

JPCP - Dowel Bar Size and Spacing

Refer to GDOT Standard 5046H:
Joint Details for Portland Cement Concrete Paving

Design Remarks	Panola Road

Prepared By 1/31/2014 4:59 PM

Pavement Test Engineer **Date**

Recommended By

State Roadway Design Engineer **Date**

Approved By

State Pavement Engineer **Date**

Filename: R:\PavementDesign\Project\PMB Active Projects\Counties - A thru E\DeKalb\0002868 PTS\Designs_&_Reports\0002868DZN.xlsm
GDOT Pavement Design Tool - Version 2.0

DECISION MATRIX

	DECISION FACTOR										Total Score	Rank
	Initial Construction Agency Costs	Maintenance Costs (nominal / discounted)	Annualized Agency Costs (LCC)	Annualized User Costs (LCC)	Salvage Value	Expected Life (Rehabilitation Frequency)	Construction (production rate - initial days)	Ease of Repairing / Maintaining (production rate - rehab days)	Constructibility / Traffic Control (Lifts)	Proven Design in Agency		
Relative Importance	50%	25%	5%	5%	2%	2%	2%	2%	2%	5%		
ALTERNATIVE A-HMA Full Depth Mainline	1.00 50.0	0.84 21.0	1.00 5.0	0.30 1.5	0.00 0.0	0.50 1.0	1.00 2.0	0.33 0.7	0.60 1.2	1.00 5.0	87.3	2
ALTERNATIVE B-PCC Full Depth Mainline	0.85 42.7	1.00 25.0	0.91 4.5	1.00 5.0	0.00 0.0	1.00 2.0	0.86 1.7	1.00 2.0	1.00 2.0	1.00 5.0	89.9	1

ATTACHMENT 8
BRIDGE INVENTORY

Processed Date:6/26/2013

Parameters: Bridge Serial Num

Bridge Inventory Data Listing

Structure ID:089-0228-0 **Dekalb** **SUFF. RATING:** 73.17

Location & Geography

Structure ID:	089-0228-0
200 Brdge Information:	06
*6A Feature Int:	I-20
*6B Critical Bridge:	0
*7A Route No Carried:	CR05150
*7B Facility Carried:	PANOLA ROAD
9 Location:	3.7 MI W OF LITHONIA
2 Dot District:	7
207 Year Photo:	2012
*91 Inspection Frequency:	24 Date: 03/20/2012
92A Fract Crit Insp Freq:	0 Date: 02/01/1901
92B Underwater Insp Freq:	0 Date: 02/01/1901
92C Other Spc. Insp Freq:	0 Date: 02/01/1901
* 4 Place Code:	00000
*5 Inventory Route(O/U):	1
Type:	4
Designation:	1
Number:	09012
Direction:	0
*16 Latitude:	33 " 42.2047 HMMS Prefix:
*17 Longtitude:	84 -10.2177 HMMS Suffix: MP:0.00
98 Border Bridge:	000%Shared:00
99 ID Number:	000000000000000
*100 STRAHNET:	0
12 Base Highway Network:	1
13A LRS Inventory Route:	892515000
13B Sub Inventory Route:	0
101 parellel Structure:	N
*102 Direction of Traffic:	2
*264 Road Inventory Mile Post:	003.78
*208 Inspection Area:	7 Initials: EFP
Engineer's Initials:	eep
* Location ID No:	089-09012M-018.07E

*104 Highway System:	1
*26 Functional Classification:	16
*204 Federal Route Type:	M No: 09012
105 Federal Lands Highway:	0
*110 Truck Route:	0
2006 School Bus Route:	1
217 Benchmark Elevation:	0000.00
218 Datum:	0
*19 Bypass Length:	02
*20 Toll:	3
*21 Maintanance:	01
*22 Owner:	01
*31 Design Load:	6
37 Historical Significance:	5
205 Congressional District:	04
27 Year Constructed:	1959
106 Year Reconsrtucted:	1985
33 Bridge Medium:	0
34 Skew:	15
35 Structure Flared:	0
38 Navigation Control:	N
213 Special Steel Design:	0
267 Type of Paint:	0
*42 Type of Service On:	5
Type of Service Under:	1
214 Movable Bridge:	0
203 Type Bridge:	Z
259 Pile Encasement	3
*43 Structure Type Main:	5 02
45 No.Spans Main:	004
44 Structure Type Appr:	0 00
46 No Spans Appr:	0000
226 Bridge Curve Horz	0 Vert: 1
111 pier Protection	0
107 Deck Structure Type:	1
108 Wearing Structure Type:	6
Membrane Type:	1
Deck Protection:	8

Signs & Attachments

225 Expansion Joint Type:	15
242 Deck Drains:	0
243 Parapet Location:	3
Height:	2
Width:	1
238 Curb Height:	1
Curb Material:	1
239 Handrail	7 7
*240 Medium Barrier Rail:	0
241 Bridge Median Height:	0
* Bridge Median Width:	0
230 Guardrail Loc. Dir. Rear:	3
Fwrd:	3
Oppo. Dir. Rear:	0
Oppo. Fwrd:	0
244 Aproach Slab	3
224 Retaining Wall:	0
233Posted Speed Limit:	45
236 Warning Sign:	0.00
234 Delineator:	1.00
235 Hazzard Boards:	0
237 Utillties Gas:	23
Water:	00
Electric:	00
Telephone:	25
Sewer:	00
247 Lighting Street:	0
Navigation:	0
Aerial:	0
*248 County Continuity No.:	00

"The Information contained in this File/Report is the property of GDOT and may not be released to any other party without the written consent of the Data Custodian. Please dispose of this information by shredding or other confidential method."

Processed Date:6/26/2013

Parameters: Bridge Serial Num

Bridge Inventory Data Listing

Structure ID:089-0228-0

Programming Data

201 Project No:	I-20-2 (5)/ IR -20-2 (101
202 Plans Available:	4
249 Prop Proj No:	00000000000000000000000000
250 Approval Status:	0000
251 PI Number:	M003309
252 Contract Date:	02/01/1901
260 Seismic No:	00000
75 Type Work:	00 0
94 Bridge Imp: Cost:	$2,078
95 Roadway Imp. Cost:	208
96 Total Imp Cost:	3117
76 Imp Length:	000000
97 Imp Year:	2013
114Furure ADT:	034620 Year:2031

Hydralic Data

215Waterway Data:	
High Water Elev:	0000.0 Year:1900
Flood Elev:	0000.0 Freq:00
Avg Streambed Elev:	0000.0
Drainage Area:	00000
Area of Opening:	000000
113 Scour Critical	N
216Water Depth:	00.0 Br.Height:00.0
222Slope Protection:	4
221Slope Protection	0 Fwd:0
219Fender System	0
220Dolphin:	0
223Current Cover	000
Type:	0
No. Barrels:	0
* Width:	0.00 Height:0.00
* Length:	0 Apron:0
265 U/W Insp. Area	0 Diver:ZZZ
Location ID No:	089-09012M-018.07E

Measurements:

*29ADT	023080 Year:2011
109%Trucks:	0
* 28 Lanes On:	07 Under:06
210 No. Tracks On:	00 Under:00
* 48 Max. Span Length	0060
* 49 Structure Length:	225
51 Br. Rwdy. Width	82.70
52 Deck Width:	90.00
* 47 Tot. Horiz. Cl:	83
50 Curb / Sidewalk Width	0.00 / 5.00
32 Approach Rdwy. Width	072
*229 Shoulder Width:	
Rear Lt:	2.00 Type:1 Rt:2.00
Fwd. Lt:	2.00 Type:1 Rt:2.00
Permanent Width:	
Rear:	68.00 Type:1
	68.00 Type:2
Intersaction Rear:	1 Fwd: 1
36Safety Features Br. Rail:	1
Transition:	1
App. G. Rail:	1
App. Rail End:	1
53 Minimum Cl. Over:	99' 99 "
Under:	
*228 Minimum Vertical Cl	
Act. Odm Dir.:	99' 99"
Oppo. Dir:	99' 99"
Posted Odm. Dir:	00' 00"
Oppo. Dir:	00' 00"
55 Lateral Undercl. Rt:	H 10 10
56 Lateral Undercl. Lt:	5.00
*10 Max Min Vert Cl:	99' 99" Dir:0
39 Nav Vert Cl:	000 Horiz:0000
116 Nav Vert Cl Closed:	000
245 Deck Thickness Main	7.00
Deck Thick Approach:	0.00
246 Overlay Thickness:	2.00
212 Year Last Painted:	Sup:0000Sub:0000

65 Inventory Rating Mathod:	1
63 Operating Rating Method:	1
66 Inventory Type:	2 Rating: 29
64 Operating Type:	2 Rating: 29
231Calculated Loads:	
H-Modified:	21 0
HS-Modified:	30 0
Type 3:	28 0
Type 3s2:	37 0
Timber:	33 0
Piggyback:	00 0
261 H Inventory Rating:	27
262 H Operating Rating	46
67 Structural Evaluation:	6
58 Deck Condition:	7
59 Superstructure Condition:	6
* 227 Collision Damage:	1
60A Substructure Condition:	7
60B Scour Condition:	N
60C Underwater Condition	N
71 Waterway Adequacy:	N
61 Channel Protection Cond.:	N
68 Deck Geometry:	4
69 UnderClr. Horz/Vert:	6
72 Appr. Alignment:	8
62 Culvert:	N

Posting Data

70 Bridge Posting Required	5
41 Struct Open, Posted, CL:	A
* 103 Temporary Structure:	0
232 Posted Loads	
H-Modified:	00
HS-Modified:	00
Type 3:	00
Type 3s2:	00
Timber:	00
Piggyback	00
253 Notification Date:	02/01/1901
258 Fed Notify Date:	2/1/1901 12:00:00AM

"The Information contained in this File/Report is the property of GDOT and may not be released to any other party without the written consent of the Data Custodian. Please dispose of this information by shredding or other confidential method."

ATTACHMENT 9
HYDROLOGY STUDY FOR MS4 PERMIT

Conceptual Analysis of MS4 Compliance
Panola Road and I-20

Project Number: NHS00-0002-00(868)
P.I. Number: 0002868
DeKalb County, Georgia

(August 23, 2013)

Study Purpose: To evaluate the need for post construction stormwater management measures (BMPs) as per GDOT's MS4 Permit (GAR041000). The Permit regulates new and existing point source discharges of stormwater from roadways owned and operated by GDOT to waters of the State of Georgia. The Panola Rd project (Project) must meet the requirements of the Permit which includes the incorporating permanent water quality control and detention measures (BMPs) into the design where appropriate and where those BMPs have not been determined to be infeasible based on the infeasibility criteria identified in Section 1.4 of the GDOT Guidelines for Design of Post-Construction BMPs (GDOT Guidelines) issued February 22, 2013 (Appendix A).

Introduction: The Project improvements along Panola Road between Fairington Rd to Snapfinger Woods Dr and includes reconstruction of the Panola Road interchange at I-20. The construction will result in a net increase in the amount of impervious area within the Right of Way (ROW).

Design Criteria: To the extent feasible, the BMPs will be designed in accordance with the Permit requirements, the GDOT Guidelines, and the Georgia Stormwater Management Manual (GSMM).

A summary of the standard design criteria from the GDOT Guidelines is as follows:

- **Stormwater runoff quality and reduction** – demonstrate 80% of the total suspended solids (TSS) from runoff generated by a 1.2-inch rainfall event. The GSMM refers to this design criteria as the Water Quality Sizing Criteria.

- **Stream channel protection** – detain the 1-year 24-hour rainfall event. The GSMM refers to this design criteria as the Channel Protection Sizing Criteria.

- **Overbank protection** – calculated post-construction peak discharge rate that is less than or equal to pre-construction rates, for the 25-year 24-hour rainfall event. The GSMM refers to this design criteria as the Overbank Flood Protection Sizing Criteria.

- **Extreme flood protection** – control the 100-year 24-hour flood such that flooding is not exacerbated. The GSMM refers to this design criteria as the Extreme Flood Protection Sizing Criteria.

Per the GDOT Guidelines, post construction BMPs are not required for the following:

- To manage runoff from existing impervious surfaces. BMPs are only required for treatment of newly added (proposed) impervious surfaces. In some cases, existing impervious surfaces may be treated to compensate for newly added surfaces that could not be treated.

- To manage sheet flow (non-point source discharges)

- To manage flows that originate outside of GDOT's ROW or to manage flows diverted from undisturbed areas.

BMP Selection Criteria: Following BMP selection criteria was used to evaluate the suitability and selection of BMPs as per GSMM.

- Drainage Area
    - 25-acres minimum for Wet or Wet extended detention stormwater ponds
    - 10-acres minimum for Micropool extended detention stormwater ponds
    - 5-acres maximum for bioretention areas
    - 5-acres maximum for enhanced swales
- Site slope
    - 15% maximum for stormwater ponds
    - 6% maximum for bioretention areas
    - 4% maximum for enhanced swales

Results/Conclusions:

Hydraulic analysis and selection of BMPs are summarized in Table 1 below. In addition to the specifics on about each drainage area, the table also contains rationale where BMPs are not recommended. A drainage area map and approximate location of BMPs are attached to this memo.

Table 1: Proposed MS4 BMPs

Basin Name	Basin Areas (ac)		Treatment Approach (BMP)	MS4 Requirements						Rationale / Justifications
				$WQ_{V\ (cfs)}$		$CP_{V\ (cfs)}$		Overbank Protection	Extreme Flood Protection	
	Pre	Post		Required	Achieved	Required	Achieved			
1	28.44	28.66	None	1681.92	Not Achieved	1999.00	Not Achieved	Not Achieved	Not Achieved	Pond is needed, but not feasible without impacting stream and stream buffer.
2	3.55	6.79	Stormwater Pond	3023.01	3057.22	37951.00	38166.06	Achieved	Achieved	All requirements achieved with stormwater pond
3	0.36	0.36	None Required	N/A	N/A	N/A	N/A	N/A	N/A	Sheet Flow
4	1.79	1.90	None	1238.04	Not Achieved	4675.00	Not Achieved	Not Achieved	Not Achieved	Bio Retention area is needed, but no space due to stream location
5	2.25	2.09	Enhanced Swale	718.65	720.00	Not Required	Not Required	Not Achieved	Not Achieved	WQ achieved with swale. CP not required
6a & 6b	11.91	11.91	Stormwater Pond	4952.61	5024.05	427.00	441.65	Achieved	Achieved	All requirements achieved with stormwater pond
6c	4.43	4.43	None	936.90	Not Achieved	10288.00	Not Achieved	Not Achieved	Not Achieved	Not enough space for adequate Bio Retention area due to site constraints
7 & 9	2.51	2.53	None	865.53	Not Achieved	1300.00	Not Achieved	Not Achieved	Not Achieved	Not enough space for adequate Bio Retention area due to site constraints
8	0.24	0.24	None Required	N/A	N/A	N/A	N/A	N/A	N/A	Sheet Flow
10 & 11	2.32	2.32	Bio Retention Area	322.92	322.92	237.00	237.00	Not Achieved	Not Achieved	WQ and CP achieved with bioretention area
12	15.28	15.28	None	4024.71	Not Achieved	12598.00	Not Achieved	Not Achieved	Not Achieved	Pond is needed, but no space due to site constraints

13	26.61	26.98	Stormwater Pond & Detention Pond & Bio Retention Area	5757.13	5870.37	20106.00	20257.61	Not Achieved	Not Achieved	Stormwater and detention ponds in the infield of the interchange and Bio Retention area near the outlet
14	4.68	5.12	Stormwater Pond	3188.88	3198.08	6518.00	6600.98	Achieved	Achieved	All requirements achieved with stormwater pond
15	1.57	1.46	None Required	N/A	N/A	N/A	N/A	N/A	N/A	Sheet Flow
16	0.34	0.28	None Required	N/A	N/A	N/A	N/A	N/A	N/A	Sheet Flow
17	18.20	17.61	Stormwater Pond	4789.17	4909.87	5245.00	5260.17	Achieved	Achieved	All requirements achieved with stormwater pond
18	7.60	7.60	Stormwater Pond	2121.12	2148.48	5965.00	6033.53	Achieved	Achieved	All requirements achieved with stormwater pond

Attachments:
Drainage Area Map and Conceptual Location of BMPs

Panola Road at I-20 from Fairington Road to Snapfinger Woods Drive

MS4 BMP Concept Layout PRELIMINARY

Project NHS00-0002-00(868) P.I. 0002868

August 23, 2013

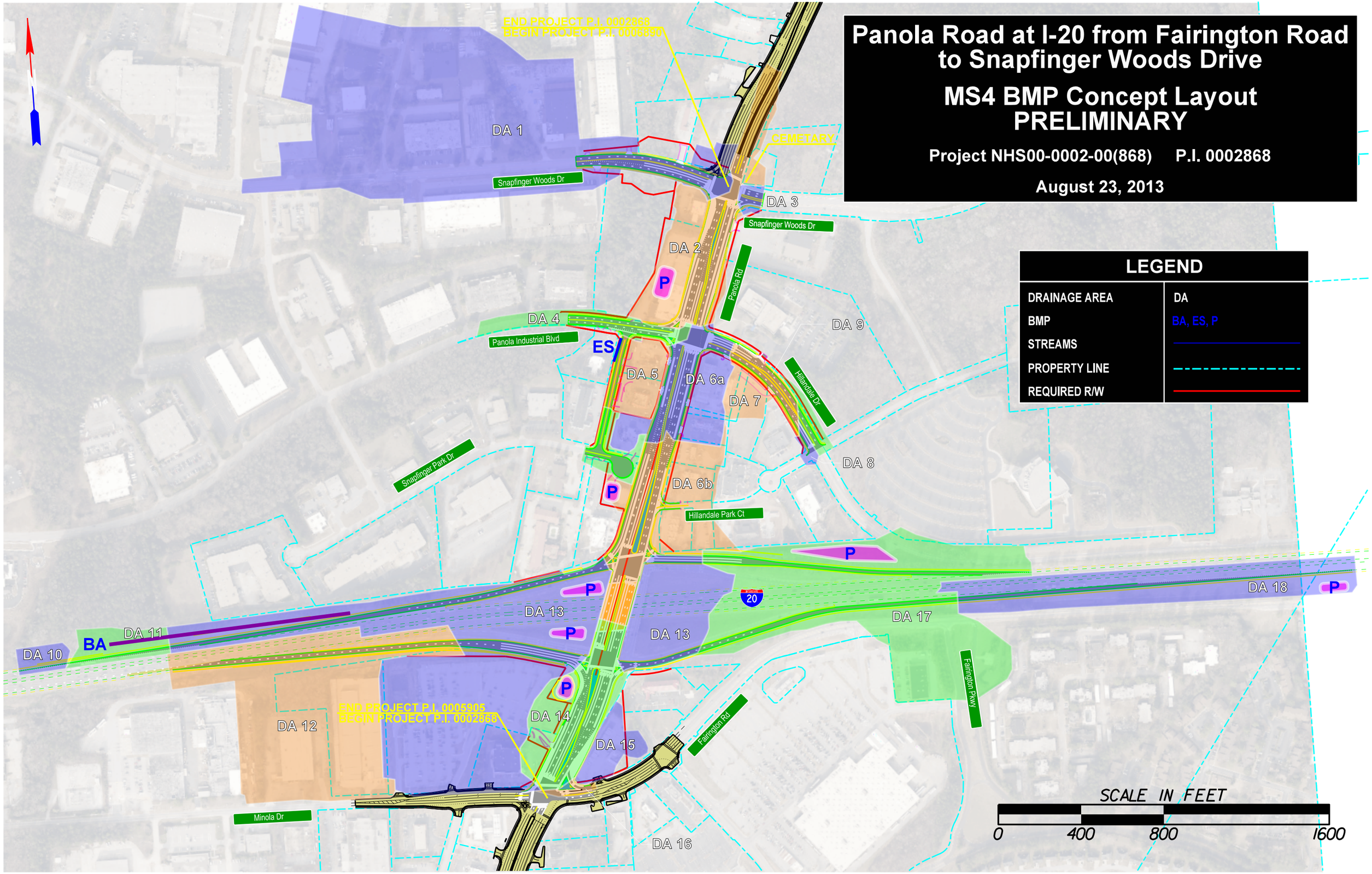

LEGEND

DRAINAGE AREA	DA
BMP	BA, ES, P
STREAMS	
PROPERTY LINE	
REQUIRED R/W	

ATTACHMENT 10

CONFORMING PLAN'S NETWORK SCHEMATICS SHOWING THRU LANES

Panola Road at I-20 Interchange – TO # 5 (P.I. No. 0002868)
ARC Plan 2040 Model

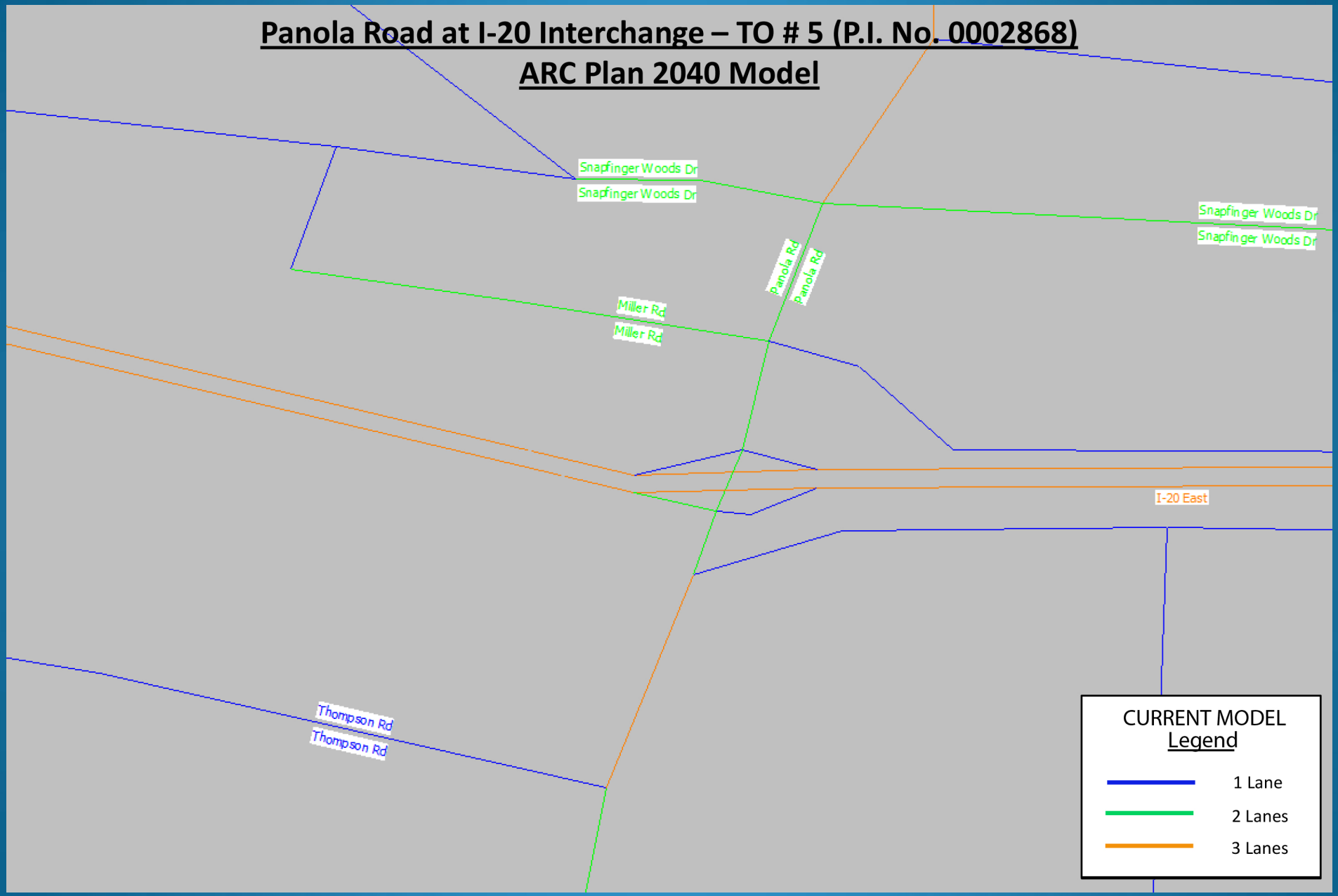

ATTACHMENT 11
MINUTES OF CONCEPT MEETINGS

ARCADIS U.S., Inc.
2410 Paces Ferry Road
#400
Atlanta
Georgia 30339
Tel 770 431 8666
Fax 770 435 2666

MEETING REPORT

Subject:
Initial Concept Team Meeting
Panola Road Interchange Improvements
P.I. No. 0002868

Department:
Infrastructure

ARCADIS Project No.:
GADT0105

Place/Date of Meeting:
Georgia Department of Transportation
October 17, 2013

Report No.:

Minutes by:
Jessica Laing

Issue Date:
Nov 14, 2013

Participants:
Vinesha Pegram, GDOT
Matt Sanders, GDOT
Steve Sander, GDOT
Katrina Lawrence, GDOT
Bill DuVall, GDOT
Wade Woodard, GDOT
Annette Easom, DeKalb County
Jennifer Giersch, FHWA
Jean Hee Barrett, ARC
Bonnie Bynum, ARCADIS
Shamir Poudel, ARCADIS
Jessica Laing, ARCADIS

Copies:
Participants

---

1. An Initial Concept Team Meeting was held for the subject project on October 17, 2013. A sign-in sheet of attendees is attached to these meeting minutes.

2. The meeting began with introductions and an overview of the project schedule. Following is a tentative schedule for the project:

   - Concept Approval: Spring 2014
   - NEPA Approval: Fall 2015
   - Right of Way Approval Date and Letting Date: To Be Determined

3. Shamir Poudel provided a review of the concept report, existing conditions, and proposed design. Following is a summary of the overview:

- PI 0002868 is the fourth of five segments that are a part of the overall Panola Road corridor improvements.
- A single environmental document is being prepared for all five segments of the Panola Road corridor improvements. FHWA has reviewed the Draft Environmental Assessment (EA), which addresses impacts associated with conceptual level improvements at the interchange. Environmental special studies and the Draft EA are being revised with new information.
- The average daily traffic (ADT) volume along Panola Road is currently approximately 44,000 and is expected to be approximately 66,000 by 2040.
- The project area is surrounded by commercial properties, including restaurants, hotels, and gas stations. A park and ride is located at the southwest quadrant of the interchange.
- There are two through lanes along Panola Road in each direction, and two northbound to westbound left turn lanes and one southbound to eastbound left turn lane at the interchange. There are no medians along Panola Road.
- Under no-build conditions, the Level of Service (LOS) is expected to be between D and E in 2020 and between D and F in 2040.
- Crash rates in the project area are significantly higher than the statewide average for similar facilities. Of the crashes in the project area, 42% are rear ends, 34% are angle type, and 15% are sideswipes (same direction).
- A substandard horizontal curve with a ±570-foot radius exists along Panola Road just south of the east-facing ramps.
- The angle at the intersection of Panola Road and Fairington Road is 58 degrees, which is less than the minimum of 60 degress. This intersection was evaluated for improvement as a part of PI 0005905 (Segment 3 of the Panola Road corridor). In light of impacts to adjoining properties, it was decided that this intersection will not be improved. A design exception was approved on November 20, 2010.
- Sidewalk currently exists along both sides of Panola Road, except for at the bridge over I-20 where sidewalk only exists along the western side of the road between the two I-20 ramps.
- The justification for this project is based on improving traffic congestion, reducing crash frequency, providing a multi-modal connection, and addressing conditions that do not meet American Association of State Highway and Transportation Officials (AASHTO) standards.
- The existing bridge is approximately 225 feet long and 88 feet wide with four spans and concrete beams. The bridge was originally built in 1956 and was widened in 1985. A minor modification was performed in 2010 to remove the sidewalk on the eastern side to allow for an additional left northbound to westbound turn lane. The current bridge sufficiency rating is 73.17.

- Proposed improvements include reconstructing the existing interchange with a tight diamond configuration. The project will include three through lanes in each direction with bike lanes and sidewalks on each side. Two left turn lanes will be provided along northbound and southbound direction of Panola road to turn onto I-20 on-ramps. A raised median will also be constructed. The existing bridge will be replaced.
- Six property relocations are anticipated.
- The project lies within the metropolitan area, and DeKalb County is regulated under a Municipal Separate Storm Sewer Systems (MS4) permit. Therefore, the project will have to comply with the GDOT MS4 permit.
- The project improvements will result in a LOS ranging from B to D in 2040 a.m. conditions and a LOS ranging from C to D in 2040 p.m. conditions.
- A travel time study shows significant travel time reduction in 2020 compared to no-build conditions. There will be some reductions in 2040, but the congestion along I-20 will impact the travel times along Panola Road under both the no-build and build scenarios.
- Two other alternatives were evaluated: a regular diamond and a diverging diamond configuration. Both of these alternatives provided similar congestion relief benefits to the one under consideration but required more property impacts.
- Environmental impacts include 257 LF of impacts to perennial streams. It is anticipated that 0.3 acres of stream buffer will be impacted but it's expected that this impact will be exempt due to drainage construction. No other environmental impacts are associated.
- A public meeting was held in June 2013 and was attended by 172 people.

4. After the presentation of existing and proposed conditions, the meeting was opened to general questions and comments regarding the proposed concept, concept report, and operational conditions. Below is a listing of the questions, comments, and responses:

- **Question by Bill Duval**: Was the current plan the best you could do to straighten out the curve?

  Response: The current plan allows for better staging of bridge construction in addition to horizontal curve correction.

  Question by Bill Duval: Will the bridge length be increased? A longer bridge will require Panola Road to be raised to provide required clearance over I-20 due to the larger beams required for longer spans.

  Response: The bridge length is undecided at this time. However, conceptual design completed accounts for some elevation change along Panola Road.

- **Question by Bill Duval:** Is the raised median width on the bridge 4 feet or 8 feet? The typical section shows 8 feet.

  Response: The total median width is 8 feet, of which 4 feet is raised. Typical sections will be revised to reflect this.

- **Comment by Shamir Poudel:** The current concept calls for reducing the northbound to westbound left turn lanes from two lanes to one lane during construction. This will minimize permanent impacts to adjacent properties.

  Response: Reduction of these lanes during construction needs to be discussed at a later date as a part of the Traffic Control Plan (TCP). Should a detour be required, it will be addressed during the Public Hearing Open House (PHOH).

- **Comment by Jean Hee:** ARC is making final changes to the 2040 model in preparation for the next plan update. Any changes to schedule, cost, or design should be provided to ARC as soon as possible. ARC plans to send the draft list of projects to the stakeholders in the next week or two.

  Response: Additional cost and schedule updates are not available at this time other than what is already included in TPro. However, the lane configuration shown in the 2040 model does not match the proposed design. Panola Road is currently shown as two lanes in each direction in the model. The model needs to be modified to show three lanes in each direction. A line diagram showing these changes will be sent to ARC via the Office of Planning.

- **Comment by Katrina Lawrence:** The project justification needs to be updated in the concept report.

  Response: The approved project justification statement will be included in the next submission of the concept report.

- **Comment by Matt Sanders:** The need for a Design Variance is noted, but since the proposed spacing for the openings at the ramps is less than the minimum of 660 feet and the current configuration affects so much of the design, it is recommended that the PM and Design Team consider obtaining the Design Variance before moving forward with the design or conducting the PHOH.

  Response: Preparation of the design variance will be started immediately.

- **Comment by Matt Sanders:** According to the revised PDP, a draft Environmental Assessment (EA/FONSI) must be approved prior to scheduling the PFPR. In order to comply with the anticipated environmental document, four other project segments must be accounted for to complete the environmental process, so timing and coordination will be critical.

- **Response:** Conceptual plans and/or preliminary plans are being developed for all five segments. Currently plans for the PI 0002868 segment are a little behind compared to the other segments. It is anticipated that all necessary details required for an approved draft EA will be available.

- **Comment by Matt Sanders:** It is noted that no buffer variance will be required, but it appears from the conceptual drainage area map (Page 81) that waters of the U.S. may be present within the project limits. The potential impact to any such resources would need to be verified prior to the construction of this project.

  Response: Stream and stream buffer impacts are currently being evaluated. It is anticipated that impacts to buffers will be exempt as they relate to construction of drainage structures.

- **Comment by Matt Sanders:** Fill in the date for the Initial Concept Meeting (ICM)

  Response: This date will be filled in.

- **Comment Matt Sanders**: These cost estimates are not programmed in TPRO. Please submit annual requests for cost estimates to be updated.

  Response: Requests for updated cost estimates will be made after the concept team meeting to capture any changes resulting from that meeting.

- **Comment Matt Sanders:** The proposed pavement structures are not identified. Please do not wait until the final plans phase to begin the pavement evaluation and pavement design processes.

  Response: Pavement design and pavement evaluation will be conducted during the preliminary design phase.

- **Comment by Wade Woodard:** There seem to be no utilities on the bridge except AT&T, whom may ask to increase the number of conduits.

  Response: Utility requests will be coordinated during preliminary and final design.

- **Comment by Matt Sanders:** The dates in the concept report for concept team meetings need to be adjusted.

  Answer: This will be revised in the report.

5. Action Items

- Start discussion regarding the required bridge opening under Panola Road to accommodate future lane expansions along I-20: Shamir Poudel, Vinesha Pegram - **COMPLETED**

- Send line diagrams showing lane configurations along Panola Road to the Office of Planning: Shamir Poudel - **COMPLETED**

Sign-in Sheet

Name	**Organization**	**Email Address**	**Phone Number**
Vinesha C. Pegram	GDOT/Program Delivery	vpegram@dot.ga.gov	404.631.1587
Matt Sanders	GDOT/Engineering Services	msanders@dot.ga.gov	404.631.1752
Steve Sander	GDOT/Engineering Services	ssander@dot.ga.gov	678.630.1270
Katrina Lawrence	GDOT/Planning	klawrence@dot.ga.gov	404.631.1646
Bill DuVall	GDOT/Bridge	bduvall@dot.ga.gov	404.631.1883
Wade Woodard	GDOT/District 7 Utilities	wwoodard@dot.ga.gov	770.986.1117
Annette Easom	DeKalb County	aeasom@dekalbcountyga.gov	770.492.5216
Jennifer Giersch	FHWA	jennifer.giersch@dot.gov	404.562.3653
Jean Hee Barrett	ARC	jbarrett@atlantaregional.com	404.463.3282
Bonnie Bynum	ARCADIS	bonnie.bynum@arcadis-us.com	770.431.8666
Shamir Poudel	ARCADIS	shamir.poudel@arcadis-us.com	770.431.8666
Jes Laing	ARCADIS	jes.laing@arcadis-us.com	414.640.4545

ARCADIS U.S., Inc.
2410 Paces Ferry Road
#400
Atlanta
Georgia 30339
Tel 770 431 8666
Fax 770 435 2666

Subject:
Meeting Minutes
Concept Team Meeting
Panola Road at I-20, Interchange Improvements
P.I. No. 0002868

Department:
Infrastructure

ARCADIS Project No.:
GADT0105.0001

Place/Date of Meeting:
Georgia Department of Transportation
December 9, 2013

Minutes by:
Jessica Laing

Issue Date:
December 16, 2013

Participants:
See attached list.

Summary of Discussions

1. A Concept Team Meeting was held for the subject project on December 9, 2013. A sign-in sheet of attendees is attached to these meeting minutes.
2. The meeting began with introductions and an overview of the project. Vinesha Pegram stated the purpose of the meeting and gave the current status of the project.
3. Shamir Poudel provided a review of the concept report, existing conditions, and proposed design. Following is a summary of the overview:
    a. P.I. 0002868 is the fourth of five segments that are a part of the overall Panola Road corridor improvements.
    b. A single environmental document is being prepared for all five segments of the Panola Road corridor improvements. FHWA has reviewed the Draft Environmental Assessment (EA), which addresses impacts associated with conceptual level improvements at the interchange. Environmental special studies and the Draft EA are being revised with new information.
    c. The average daily traffic (ADT) volume along Panola Road is currently approximately 44,000 and is expected to be approximately 66,000 by 2040.

d. The project area is surrounded by commercial properties, including restaurants, hotels, and gas stations. A park and ride is located at the southwest quadrant of the interchange.

e. There are two through lanes along Panola Road in each direction, and two northbound to westbound left turn lanes and one southbound to eastbound left turn lane at the interchange. There are no raised medians along Panola Road.

f. Under no-build conditions, the Level of Service (LOS) is expected to be between D and E in 2020 and between D and F in 2040.

g. Crash rates in the project area are significantly higher than the statewide average for similar facilities. Of the crashes in the project area, 42% are rear ends, 34% are angle type, and 15% are sideswipes (same direction).

h. A substandard horizontal curve with a ±570-foot radius exists along Panola Road just south of the east-facing ramps.

i. The angle at the intersection of Panola Road and Fairington Road is 58 degrees, which is less than the minimum of 60 degrees. This intersection was evaluated for improvement as a part of P.I. 0005905 (Segment 3 of the Panola Road corridor). In light of impacts to adjoining properties, it was decided that this intersection will not be improved. A design exception was approved on November 20, 2010.

j. Sidewalk currently exists along both sides of Panola Road, except for at the bridge over I-20 where sidewalk only exists along the western side of the road between the two I-20 ramps.

k. The justification for this project is based on improving traffic congestion, reducing crash frequency, providing a multi-modal connection, and addressing conditions that do not meet American Association of State Highway and Transportation Officials (AASHTO) standards.

l. The existing bridge is approximately 225 feet long and 88 feet wide with four spans and concrete beams. The bridge was originally built in 1956 and was widened in 1985. A minor modification was performed in 2010 to remove the sidewalk on the eastern side to allow for an additional left northbound to westbound turn lane. The current bridge sufficiency rating is 73.17.

m. Proposed improvements include reconstructing the existing interchange with a tight diamond configuration. The project will include three through lanes in each direction with bike lanes and sidewalks on each side. Two left-turn lanes will be provided along the northbound and southbound directions of Panola Road onto the I-20 on-ramps. A raised median will also be constructed. The existing bridge will be replaced.

n. Six commercial property relocations are anticipated.

o. The project costs, including construction, utility, right-of-way, and preliminary engineering were outlined for a total of $41.6 million. The latest right-of-way estimate, dated December 2013, had a large increase from the previous estimate.

p. The project lies within the metropolitan area, and DeKalb County is regulated under a Municipal Separate Storm Sewer Systems (MS4) permit. Therefore, the project will have to comply with the Georgia Department of Transportation (GDOT) MS4 permit.

q. The project improvements will result in a LOS ranging from B to D in 2040 a.m. conditions, and a LOS ranging from C to D in 2040 p.m. conditions.

r. A travel time study shows a significant travel time reduction in 2020 compared to no-build conditions. There will be some reductions in 2040, but congestion along I-20 will impact the travel times along Panola Road under both the no-build and build scenarios.

s. Two other alternatives were evaluated: a regular diamond and a diverging diamond configuration. Both of these alternatives provide similar congestion relief benefits to the one under consideration but require more property impacts.

t. Environmental impacts include 257 linear feet of impacts to perennial streams. It is anticipated that 0.3 acre of stream buffer will be impacted, but it is expected that this impact will be exempt from buffer variance requirement since the impacts are associated with drainage construction. No other environmental impacts are associated.

u. A public meeting was held in June 2013 and was attended by 172 people.

v. An estimated project schedule was outlined, with a project let date of September 2019.

4. After the presentation of existing and proposed conditions, the meeting was opened to general questions and comments regarding the proposed concept, concept report, and operational conditions. Below is a list of the questions, comments, and responses:

   a. Comment by **Vinesha Pegram** : Need to plan a conference call to discuss the updated right-of-way estimate and why the increase was so great.

      Response: Shamir Poudel will contact Vinesha to schedule the call.

   b. Comment by **Vinesha Pegram**: There is an internal GDOT meeting scheduled for December 17, 2013 to discuss the scope and schedule of the project. After that meeting, the schedule will be presented to schedule the review committee for review and approval.

   c. Question by **Katrina Lawrence**: It was her understanding that the previous schedule showed a let date of 2017 but Shamir's presentation discussed a let date of 2019. Was there a change?

      Response: No, a let date of 2019 is the estimated date; however, the schedule differences will be discussed during the internal GDOT scheduling meeting on December 17, 2013.

      Comment by **Katrina Lawrence**: Request that Vinesha let the Office of Planning know the revised dates after the internal schedule review.

      A public interest determination (PID) will be needed. **Vinesha Pegram** requested assistance from District 7 utilities for assistance on the PID.

d. Comment by **LaCresha Johnson (DeKalb Watershed Management)**: DeKalb County Water currently has two water mains running under I-20 (a 16-inch water main and a 6-inch water main). The 6-inch water main will need to be replaced; it is requested that space be provided on the bridge for this pipe.

   Response: GDOT requires a formal request letter to be sent from DeKalb County to GDOT Utilities, which will then forward to Vinesha.

e. Comment by **Lester Harris (Comcast)**: Will poles be moved during the construction of this project? Comcast aerial line relocation will be coordinated with the new location of the poles.

   Response: Pole will most likely be moved.

f. Comment by **Desmond Joseph**: Other projects in the area have mast arms, which might want to be considered for this project.

   Response: A formal request letter for a mast arm is required from DeKalb County in order to provide the funding for this addition in the project. This request will be considered once a formal letter is received.

g. Question by **Desmond Joseph**: Other projects in the area have ramp meters. Will ramp meters be required for this project?

   Response: They are not required, but many ramp meters have been implemented on I-20, and ramp meters will be considered.

h. Question by D**esmond Joseph**: What is the length of time proposed for construction?

   Response: This will be determined after the preliminary field plan review (PFPR) but the project will not be let simultaneously with the other projects on Panola Road. The schedules of the other DeKalb County projects will be reviewed at the GDOT scheduling meeting on December 17, 2013.

i. Question by **Shamir Poudel**: Can the schedule be changed in the Regional Transportation Plan (RTP) or will it have to wait until the next update?

   Response: The RTP is undergoing public comment and therefore any schedule changes will need to be added afterwards.

j. Comment by **Matt Sanders**: There are three questions that need to be answered in the Concept Report with regards to pavement type. These are included in the Concept Report template.

   Response: The section regarding pavement type will be added to the concept report. Office of Materials and Testing will be consulted if needed for assistance.

k. Comment by **Desmond Joseph**: Hospital vehicle detour movement during construction is a concern since a hospital is located in proximity to this project. The hospital needs to be notified of construction in advance to allow them to notify their drivers of possible traffic changes.

Response: Full road closures are not expected, but construction will impede the regular traffic flow along Panola Road. It is a good idea to notify the hospital closer to the start of construction.

l. Question by **Mike Lobdell**: Will this be a full bridge replacement?

Response: Yes.

m. Comment by **Wade Woodard**: AT&T currently has 24 ducts on the bridge. They are requesting that these ducts be placed back on the bridge after construction.

n. Question by **Shamir Poudel**: On what side of the bridge are these located?

Response: West side of the current bridge.

o. Comment by **Vinesha Pegram**: DeKalb County Water needs to check, as soon as possible, on whether the 16-inch water main pipe will also need replacement.

Response: This will be looked into by DeKalb County Water.

p. Question **by LaCresha Johnson**: Does GDOT have problems with jacking and boring under I-20 to replace the 16-inch pipe if necessary?

Response: No, but a detailed report is necessary.

q. Question by **Shamir Poudel**: On what side are these water main pipes located?

Response: The pipes are on the east side of the bridge and therefore will not conflict with pier construction of the new bridge.

r. Comment by **Vinesha Pegram**: Requests that Shamir keep a log on why the price has increased for the project.

5. Action Items

1. A conference call will be scheduled with Vinesha Pegram and Shamir Poudel to discuss why right-of-way increased by such a large margin. **Shamir Poudel – COMPLETED via email.**
2. Send revised schedule to Office of Planning after the schedule is finalized. **Shamir Poudel & Vinesha Pegram**
3. PID preparation. **Vinesha Pegram and District 7 utilities.**
4. Contact OMAT regarding the pavement type selection and pavement evaluation. **Vinesha Pegram - COMPLETED**

ARCADIS

List of Attendees

Name	Company	Phone	Email
Patrick Bradshaw	ARC	404.463.3273	pbradshaw@atlantaregional.com
Matt Sanders	GDOT	404.631.1752	msanders@dot.ga.gov
Desmond Joseph	GDOT	404.299.4386	djoseph@dot.ga.gov
Katrina Lawrence	GDOT	404.631.1646	klawrence@dot.ga.gov
LaCresha Johnson	DWM	770.621.7256	ladjohnson@dekalbcountyga.gov
Eddie Lee	DeKalb Traffic	404.294.2353	eglee@dekalbcountyga.gov
Vinesha C. Pegram	GDOT OPD	404.631.1587	vpegram@dot.ga.gov
Wade Woodard	GDOT District 7 Utilities	770.986.1117	wwoodard@dot.ga.gov
Lester Harris	Comcast	770.559.2308	lester_harris@cable.comcast.com
LaShawn Gipson	DeKalb Traffic	678.794.3678	lmgipson@dekalbcountyga.gov
Mike Lobdell	GDOT	770.986.1765	mlobdell@dot.ga.gov
Jessica Laing	ARCADIS	770.431.8666	jes.laing@arcadis-us.com
Jody Peace	ARCADIS	770.431.8666	jody.peace@arcadis-us.com
Mike Moilanen	ARCADIS	770.431.8666	michael.moilanen@arcadis-us.com
Shamir Poudel	ARCADIS	770.431.8666	shamir.poudel@arcadis-us.com

ATTACHMENT 12
APPROVED DESIGN EXCEPTION

DEPARTMENT OF TRANSPORTATION

STATE OF GEORGIA

INTERDEPARTMENTAL CORRESPONDENCE

FILE: **CSSTP-0005-00(905)** **OFFICE:** District Seven, Chamblee
Panola Road Corridor Improvements
Segment 3 – Thompson Mill Rd to Fairington Road
P. I. Number: 0005905, DeKalb County **DATE:** December 16, 2009

FROM: for TEA Mike Lobdell, P.E., Metro District Engineer

TO: Brent A. Story, P.E., State Design Policy Engineer

SUBJECT: **REQUEST FOR DESIGN EXCEPTION**

Approval of a Design Exception is requested for an intersection skew angle on this project.

The Panola Road project (PI # 0005905) begins at the intersection of Thompson Mill Road with Panola Road and ends at the intersection of Fairington Road with Panola Road. The project length along Panola Road for this segment is 0.43 miles.

The Panola Road Corridor improvement project (PI # 0005905) consists of widening Panola Road from the existing four-lane roadway section to a six-lane roadway section with 4' bike lanes, 5' sidewalk, and a variable 20' to 32' raised median. All crossroad intersections will be improved based on design year traffic data with improvements to approach lane configurations and turn lane lengths. Roadway widening will normally be symmetrical about existing centerlines, though asymmetrical widening will be performed where factors such as utility impacts, right of way restrictions, or geometric restrictions dictate. The Design Speed for the limits of Segment 3 is 45 mph.

The highway system functional classification for Panola Road from Thompson Mill Road to Fairington Road is an urban minor arterial, which provides access to both residential and commercial properties.

A Design Exception is requested to retain the existing skew angle (58°) between Panola Road and Fairington Road. The current guideline in the Georgia Design Policy Manual is that, "a 70° angle should be the minimum angle for intersection in Georgia". Reference is made to the ***Georgia Design Policy Manual Chapter 4 – Elements of Design; Section 4.1 Sight Distance; 4.1.5 Angle of Intersection / Skew Angle***. However the Georgia Design policy Manual and the AASHTO "Greenbook" both mention that a 60° intersection skew angle is allowable design where there are constraints. The intersection sight distance available (at 58° skew) for traffic turning from Fairington Road onto Panola Road is 540 ft looking to the left and over 700 ft looking to the right. It is important to note that this will be a signalized intersection which will "protect" left turns.

The intent of this project is to widen and reconstruct Panola Road from a four-lane roadway to a six-lane facility (with a variable 20' to 32' raised median) in order to increase the traffic capacity, and improve the safety of the highway.

The daily traffic volumes on Panola Road show the 2010 ADT as 28,680 vpd and design year 2030 ADT as 48,300 vpd within the project limits. The traffic diagrams are attached.

A review of the accident history within the project limits for four years reveals the following.

The accident rate and the accident injury rate for Panola Road are both higher than the statewide average for all four years. However more importantly there were no fatalities during this period. Rear end accidents are the most common crash type that occurs at this intersection. The majority of the rear end crashes and also sideswipes (in the same direction) occur in the westbound direction on Fairington Road approaching the subject intersection. In the westbound direction a lane "drop" occurs by changing a thru-lane to a right-turn only lane. This lane change movement is most likely the major cause for these types of accidents. These rear end crashes are possibility due to "trapped" vehicles stopping suddenly to change lanes.

The upgraded design of this project with additional lanes and improved horizontal and vertical alignment geometrics will improve the safety and capacity of this section of roadway. (See attached accident data)

The benefit to the project design to improve the intersection skew angle to a desirable skew angle of 70° is not cost effective, which is mostly due to the severe Right of Way impacts and damages to the surrounding commercial properties. There is also a substantial increase in the roadway construction cost to realign this intersection at 70°.

This recommendation to retain the existing skew angle in lieu of the additional project cost to realign Fairington Road is supported by the attached VE Study recommendation (Alterative RD-11) and cost saving analysis. After reviewing the VE Study Cost analysis we concur that the project cost savings to retain the existing angle of intersection would be approximately $4,023,000 including both the construction ($361,000) and Right of Way ($3,662,000) costs.

This is a signalized intersection which will continue to serve as mitigation to lessen the impacts of the 58° intersection skew angle.

Based on the information contained within this request, this Office recommends approval for this Design Exception to retain the existing intersection skew angle of 58° between Panola Road and Fairington Road.

BP: MAL: KM

Attachments: Traffic diagrams
Table - Accident data summary
Layout of current design w/ 70° skew
Layout of retaining existing skew with widening
Photo showing impacts to commercial developments
VE Study analysis of cost savings

0005905 DeKalb Co.

Design Exception for 58° Intersection Skew Angle.

Recommended By: _____ 1-19-2010
Director of Engineering Date

Approved: _____ 1/20/2010
Chief Engineer Date

DATE##	TIME##	PRF#	FOCB#	STATE	PROJECT NUMBER	SHEET NO.	TOTAL SHEETS
USER#		##PORTABLE##		GA		#TRD19	

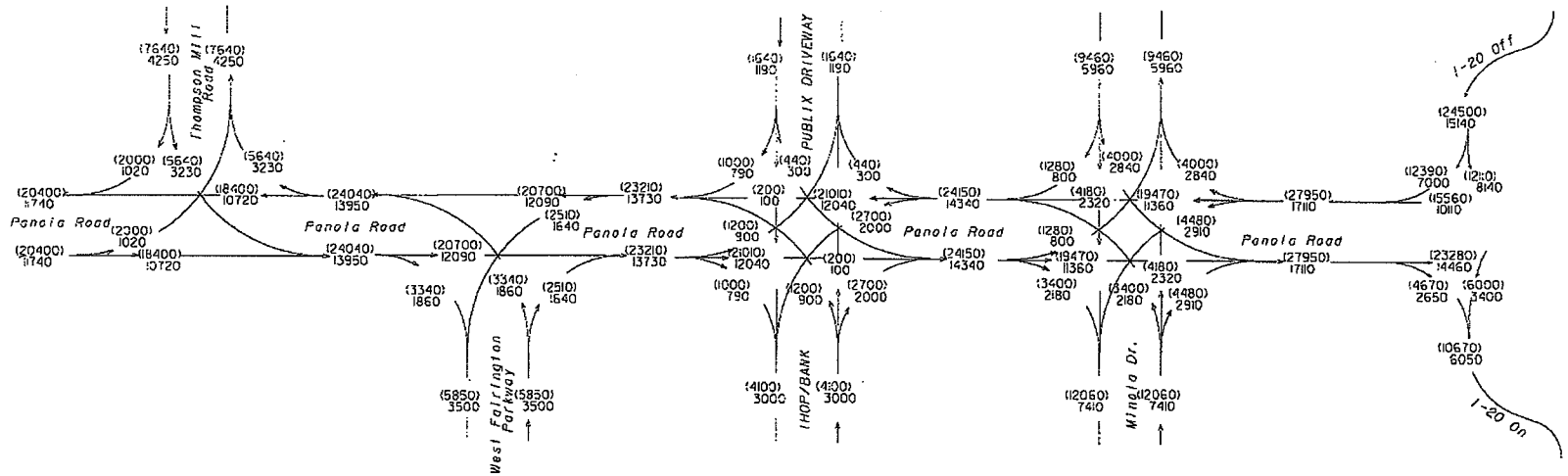

DEKALB COUNTY
PANOLA ROAD
TRAFFIC COUNTS

P.I. 0002868
NHS-0002-00(868).

2030 ADT - 1000
2010 ADT - 000

24 HR T - 10%
S.U. - 7%
COMB. - 3%

ARCA015
01/2005

REVISION DATES	STATE OF GEORGIA DEPARTMENT OF TRANSPORTATION
	OFFICE:
	TRAFFIC DIAGRAM
	DRAWING No. 10-01

DATE:%%D	TIME:%%T	%PRF%	%DGN%	STATE	PROJECT NUMBER	SHEET NO.	TOTAL SHEETS
%USER%		%PENTABLE%		GA		%TROD%	

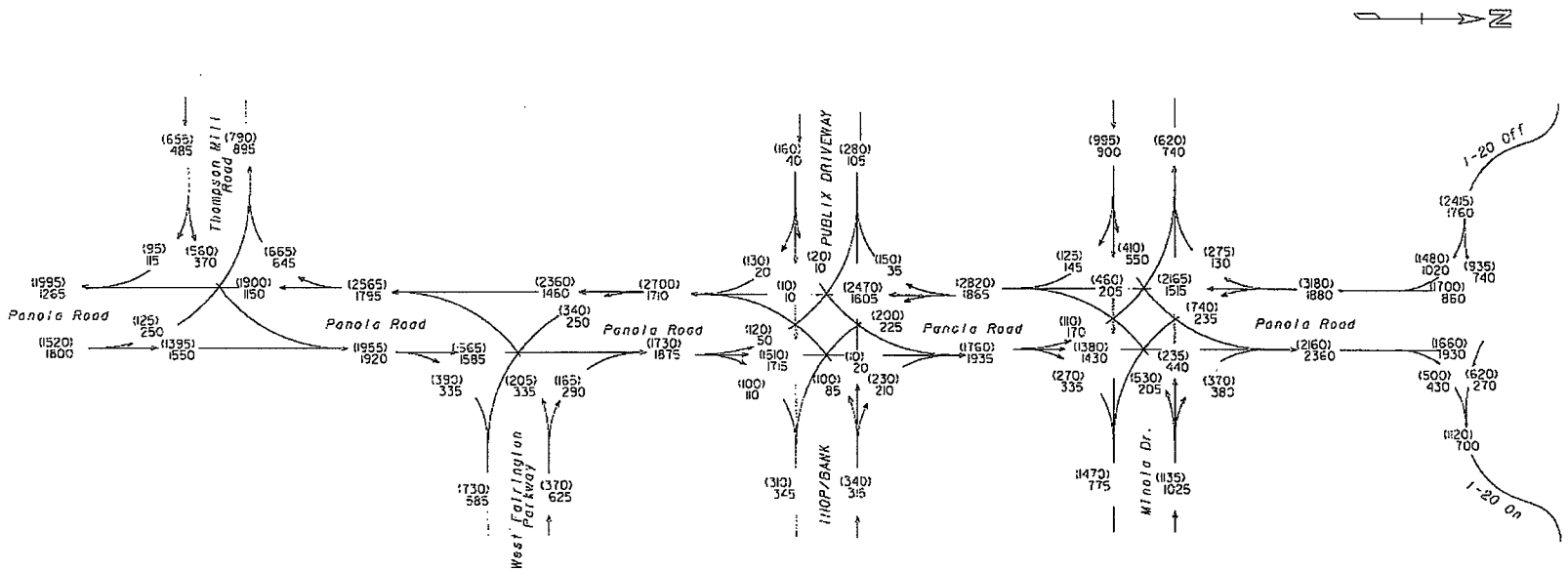

DEKALB COUNTY
PANOLA ROAD
TRAFFIC COUNTS

P.I. 0002868
NHS-0002-00(868).

2030 PM DHV - 1000
2030 AM DHV - 000

T = 10%

ARCADIS
01/2005

REVISION DATES	

STATE OF GEORGIA
DEPARTMENT OF TRANSPORTATION

OFFICE:

TRAFFIC DIAGRAM

DRAWING No.
10-02

Panola Rd at Fairington Rd Accident Summary – Attachment 2

Accident data between years 2005 and 2008, provided by Georgia Department of Transportation, was reviewed and summarized in the table shown below.

Item/Year		Year			
		2005	2006	2007	2008
Crash Types	Angle	16	20	28	12
	Rear End	39	38	33	40
	Sideswipe - Same Direction	11	19	8	7
	Sideswipe - Opposite Direction	3	1	1	3
	Not A Collision With A Motor Vehicle	2	0	1	1
	Head On	1	1	2	3
Total Accidents		72	79	73	66
Total Non-Fatal Injuries		24	14	11	24
Total Fatalities		0	0	0	0
ADT ENTERING VEHICLES		40005	40920	41865	42840
Accident Rate (per MEV)		4.93	5.29	4.78	4.22
Statewide Accident Rate (per MEV)		0.60	1.73	1.73	1.56

Note: "State Route with Other Route, Urban, and Signalized" was the classification of GDOT Data

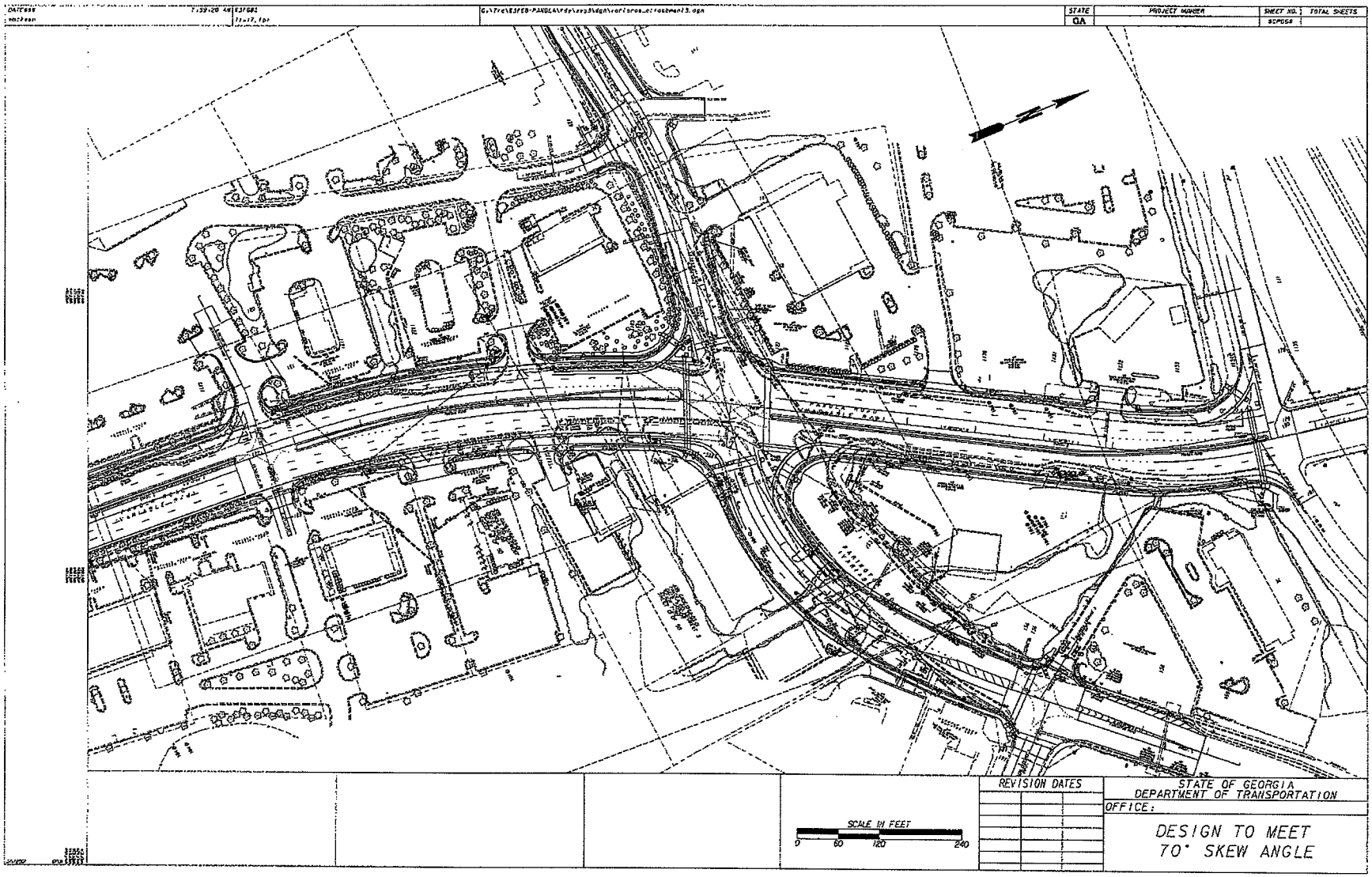

REVISION DATES

STATE OF GEORGIA
DEPARTMENT OF TRANSPORTATION

OFFICE:

DESIGN TO MEET
70° SKEW ANGLE

DATE	TIME	FILE
1ac1ess	7:59:57 AM	G:\Fran6376B-PAROLA\rdr\seq\logo\vertence_alternative14.dgn

STATE	PROJECT NUMBER	SHEET NO.	TOTAL SHEETS
GA		SCFDGN	

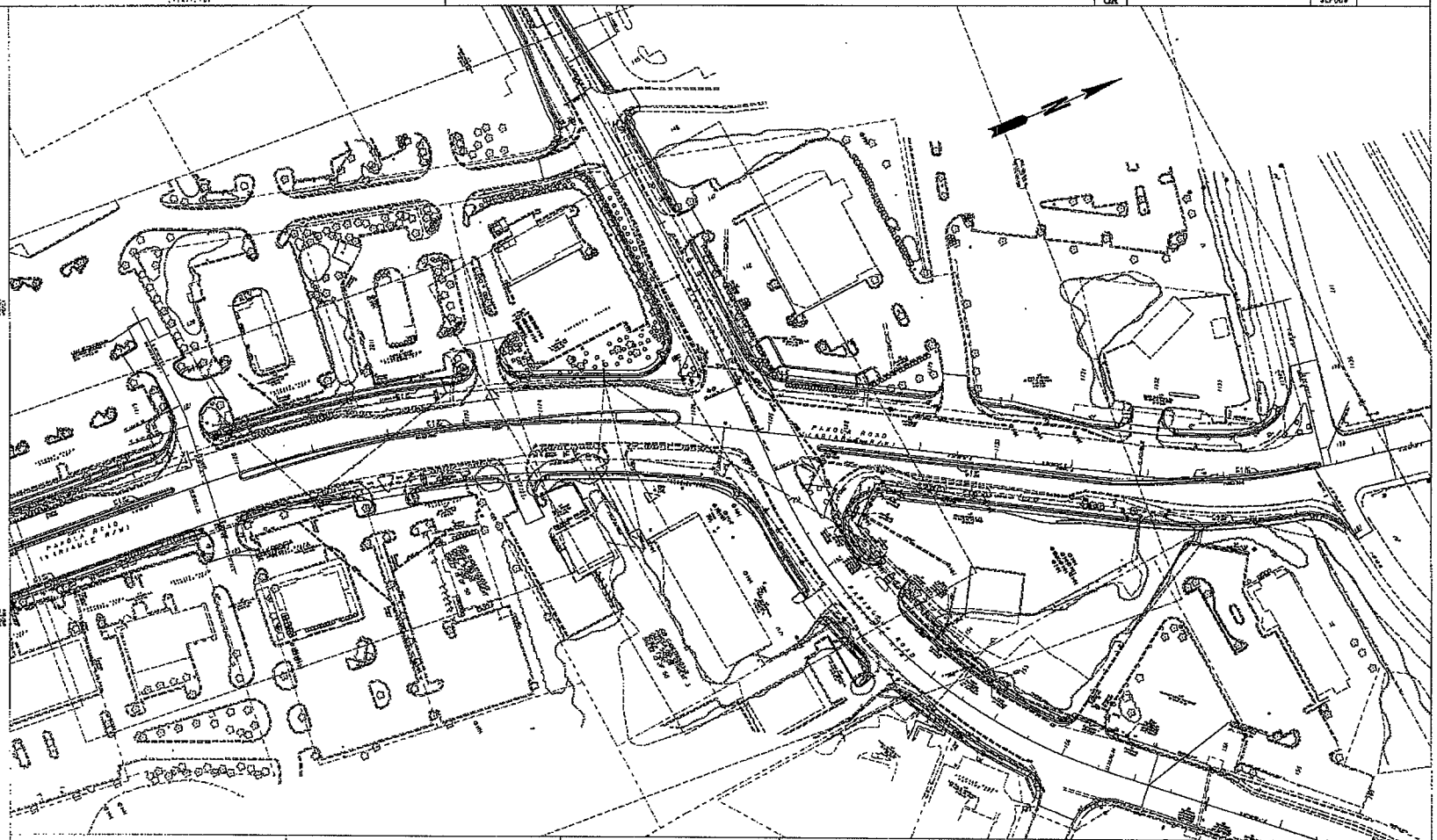

SCALE IN FEET
0 60 120 240

REVISION DATES		

STATE OF GEORGIA
DEPARTMENT OF TRANSPORTATION

OFFICE:

DESIGN TO RETAIN
EXISTING SKEW ANGLE

STATE	PROJECT NUMBER	SHEET NO.	TOTAL SHEETS
GA			

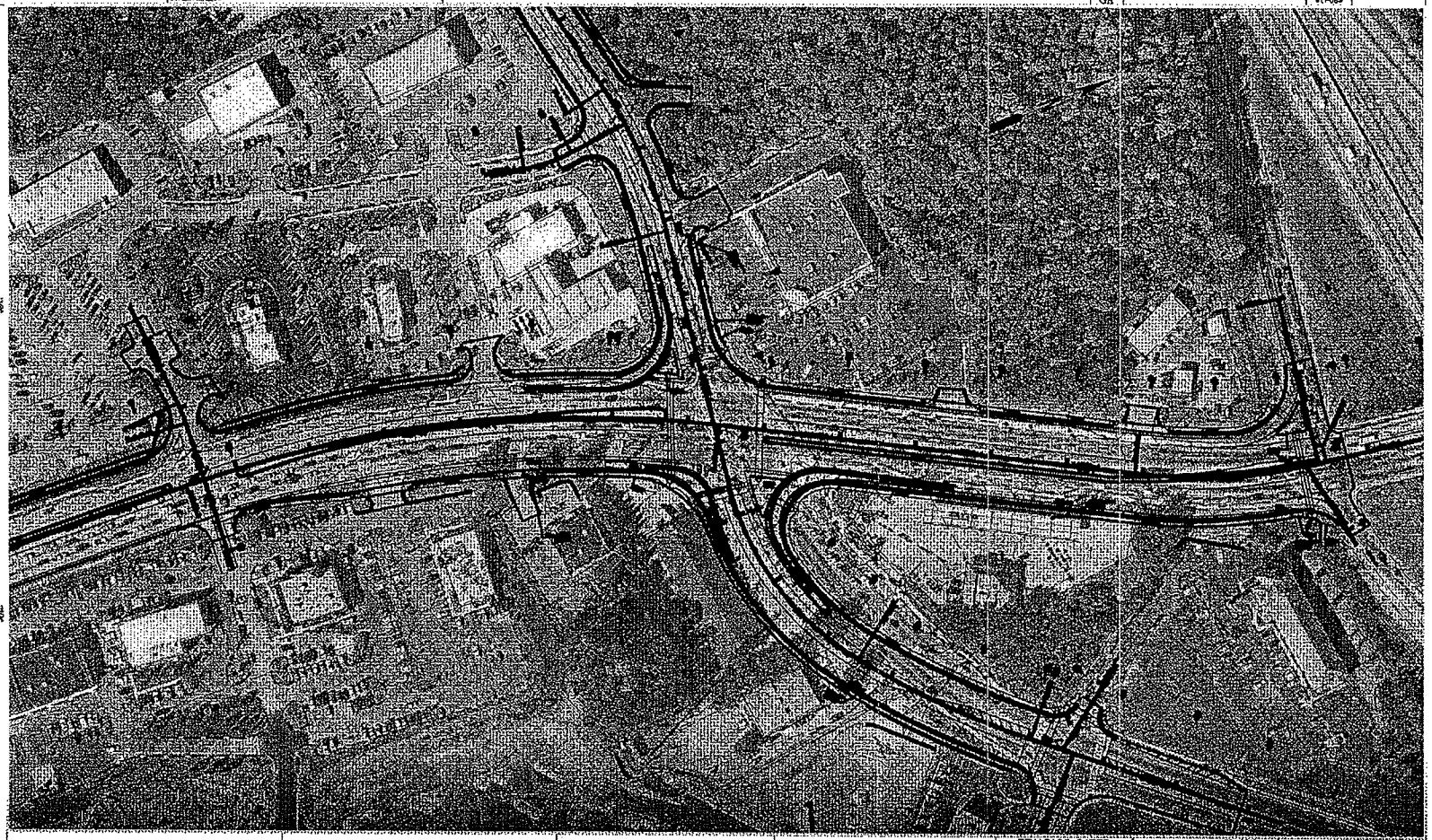

SCALE IN FEET

0 60 120 240

REVISION DATES

STATE OF GEORGIA
DEPARTMENT OF TRANSPORTATION

OFFICE:

PHOTO SHOWING IMPACTS TO COMMERCIAL DEVELOPMENTS

...\dgn\variance_attachment6.dgn 9/10/2009 8:03:20 AM

Value Analysis Design Alternative

PBSJ

PROJECT:	**Georgia Department of Transportation** **CSSTP-0005-00(905) – P.I. No. 0005905** **Panola Road Widening and Rehabilitation** **Thompson Mill Road to Fairington Road** **DeKalb County**	ALTERNATIVE NO.:	**RD- 11**
DESCRIPTION:	**Delete re-alignment of Fairington Road intersection**	SHEET NO.:	**1 of 4**

Original Design:

The original design calls for the re-alignment of Fairington Road at Panola Road intersection.

Alternative:

The alternative is to delete the realignment of this intersection.

Opportunities:

- The future reconstruction of the I-20 Bridge may correct the apparent angle deficiency.
- Reduction in number of parcels to be purchased
- Reduction in administration and legal cost for each parcel
- Affects fewer property owners
- Flexibility for the design of the new bridge

Risks:

- None

Technical Discussion:

The function of the proposed realignment of Fairington road is to improve the intersection angle. The present and proposed design signalizes the intersection. The present planning for this area calls for the widening of the I-20 bridge. This widening will most likely call for the realignment of Panola Road which could improve the Fairington intersection angle, which would negate all construction proposed. The existing situation could be improved by alternative RD-12 without impacting the existing users. Also, the proposed plan calls for the relocation of three major private business and reducing the county tax base. It appears reasonable to not realign Fairington. If desired, the existing right turn radius from Fairington onto Panola could be easily increased and or widened to two turning lanes.

COST SUMMARY	INITIAL COST	PRESENT WORTH RECURRING COSTS	PRESENT WORTH LIFE-CYCLE COST
ORIGINAL DESIGN	$ 4,023,539	$ 0	$ 4,023,539
ALTERNATIVE	$ 0	$ 0	$ 0
SAVINGS	$ 4,023,539	$ 0	$ 4,023,539

Illustrations

PBSJ

PROJECT:	**Georgia Department of Transportation** **CSSTP-0005-00(905) – P.I. No. 0005905** **Panola Road Widening and Rehabilitation** **Thompson Mill Road to Fairington Road** **DeKalb County**	ALTERNATIVE NO.: **RD-11**
DESCRIPTION:	**Delete Realignment of Fairington Road**	SHEET NO.: **2** of **4**

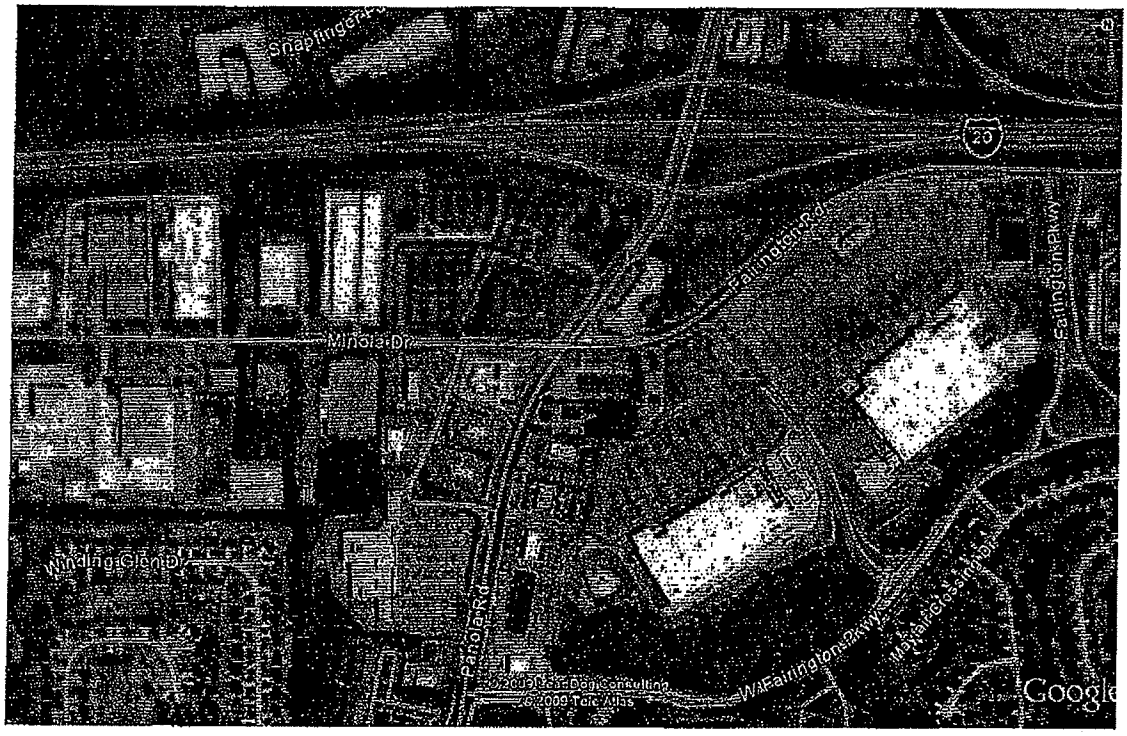

Calculations

PBSJ

PROJECT:	**Georgia Department of Transportation** **CSSTP-0005-00(905) – P.I. No. 0005905** **Panola Road Widening and Rehabilitation** **Thompson Mill Road to Fairington Road** **DeKalb County**	ALTERNATIVE NO.: **RD-11**
DESCRIPTION:	**Delete Realignment of Fairington Road**	SHEET NO.: **3** of **4**

Fairington Road
Distance = 839.41 feet
Original Design
Roadwork =
Surface = (165 * 839.41 * 72)/(9 *2000) = 554 TN
Binder = (330 * 839.41 * 36)/(9 *2000) = 554 TN
Base = (550 * 839.41 * 36)/(9 *2000) = 923.35 TN
Aggregate Base = 1 * 36 * 839.41 * (130 / 2000) = 1964.21 TN
Curb and Gutter = 1678.82 LF
Sidewalk = (839.41 * 10)/9 = 932.68 SY
Traffic Control = 0.16 LM
Reduction in Quantity
Roadwork =
Surface = (165 * 839.41 * 72)/(9 *2000) = 554 TN
Binder = (330 * 839.41 * 36)/(9 *2000) = 554 TN
Base = (550 * 839.41 * 36)/(9 *2000) = 923.35 TN
Aggregate Base = 1 * 36 * 839.41 * (130 / 2000) = 1964.21 TN
Curb and Gutter = 1678.82 LF
Sidewalk = (839.41 * 10)/9 = 932.68 SY
Traffic Control = 0.16 LM
Right-of-Way
3 Commercial of 10 designated for relocation
From Right of Way estimate:
Land - Commercial @ 30% x $3,524,664 = 1,057,399
Improvements: @ 30% x $450,000 = 135,000
Relocation @ 30% x 250,000 = 75,000
Damages @ 30% x $250,000 = 75,000
Sub-total – Net Cost = 1,342,399
Scheduling Contingency @ 55% = 738,319
Admin/court cost @ 60% = 1,248,431
Total Cost = $3,329,149

Cost Worksheet

PBSJ

PROJECT: **Georgia Department of Transportation**
CSSTP-0005-00(905) - P.I. No. 0005905
Panola Road Widening and Rehabilitation
Thompson Mill Road to Fairington Road
DeKalb County

ALTERNATIVE NO.: **RD-11**

DESCRIPTION: **Delete realignment of Fairington Road**

SHEET NO.: **4** of **4**

CONSTRUCTION ITEM		ORIGINAL ESTIMATE			PROPOSED ESTIMATE		
ITEM	UNITS	NO. OF UNITS	COST/ UNIT	TOTAL	NO. OF UNITS	COST/ UNIT	TOTAL
12.5 mm Superpave	TN	554	$ 90.00	$ 49,860	0	$ 90.00	$ -
19 mm Superpave	TN	554	$ 90.00	$ 49,860	0	$ 90.00	$ -
25 mm Superpave	TN	923	$ 90.00	$ 83,102	0	$ 90.00	$ -
Aggregate Base	TN	1,964	$ 12.65	$ 24,847	0	$ 12.65	$ -
Curb and Gutter	LF	1,679	$ 10.50	$ 17,628	0	$ 10.50	$ -
Sidewalk	SY	933	$ 25.00	$ 23,317	0	$ 25.00	$ -
Traffic Control	LM	0.16	$ 500,000.00	$ 80,000	0	$ 500,000.00	$ -
3 Commercial Properties	LS	1	$ 3,329,149	$ 3,329,149	0	$ 3,329,149	$ -
Sub-total				$ 3,657,762			$ -
Mark-up at 10%				$ 365,776			$ -
TOTAL				**$ 4,023,539**			$ -
Estimated Savings:							$4,023,539

ATTACHMENT 13
LIGHTING AGREEMENT

DEPARTMENT OF TRANSPORTATION
STATE OF GEORGIA

INDICATION OF LIGHTING SUPPORT

INTERCHANGE LIGHTING

Georgia Department of Transportation
ATTN: Scott MacLean, Lead Design Engineer
Office of Design Policy & Support, 26th Floor
600 West Peachtree Street, NW
Atlanta, GA 30308

Location

DeKalb County supports the consideration of interchange lighting.

Description: Panola Road @ I-20 from Fairington Road to Snapfinger Woods Drive

County Route Number : CR 5150/Panola Road

Project/County/P.I. No. :NHS00-0002-00(868)/DeKalb County/ P.I. No. 0002868

Associated Conditions

The undersigned agrees to participate in the following maintenance of installed interchange lighting:

- The full and entire cost to energize the lighting system installed and to provide for the operation/maintenance thereof.

We agree to participate in a formal *Local Government Lighting Project Agreement* during the preliminary design phase. This indication of support is submitted and all the conditions are hereby agreed to. The undersigned are duly authorized to execute this agreement.

this 11th day of April, 2014

By: _____
Zachary L. Williams, COO
By direction for Interim CEO
Lee May

Attest: _____
Clerk to the Board of Commissioners
and Chief Executive Officer

Barbara H. Sanders

ATTACHMENT 14

MINUTES OF OTHER COORDINATION MEETINGS

ARCADIS U.S., Inc.
2410 Paces Ferry Road
#400
Atlanta
Georgia 30339
Tel 770 431 8666
Fax 770 435 2666

MEETING REPORT

Subject:
Panola Road at I-20 Interchange
PI 000268
DeKalb County

Department:
Transportation

ARCADIS Project No.:
GADT01005

Place/Date of Meeting:
GDOT, Office of Director of Engineering
December 17, 2014

Report No.:
7

Minutes by:
Shamir Poudel

Issue Date:
December 18, 2014

Participants:
Glenn Bowman, Jim Simpson, Dave Peters, Bill DuVall, Vinesha Pegram, Shamir Poudel

Copies:
Aaron Burgess, Kim Nesbitt

A meeting was held to discuss concept report comments received from the Georgia Department of Transportation (GDOT) Director of Engineering and Chief Engineer for the above-referenced project. Discussion focused on a comment regarding the need for further evaluation of the diverging diamond interchange (DDI) for the Panola Road at I-20 interchange. A summary of the discussion and follow-up items are presented below.

- Shamir Poudel (ARCADIS project manager) provided background on project development and the alternative selection process:
  - Three interchange alternatives were considered: a regular diamond interchange, a compressed diamond interchange, and a DDI.
  - For all three alternatives, it was assumed that the Panola Road bridge over I-20 would be replaced. The Panola Road alignment was shifted to the west to allow for staged construction.
  - At the project kickoff meeting, the condition of the existing bridge was discussed. Due to the age of the bridge (constructed in the 1950s), amount of widening already conducted, and available space underneath the bridge for I-20 (which currently carries three lanes in each direction), it was decided that the bridge is a good candidate for replacement regardless of the improvement alternative selected. The Wesley Chapel Road interchange to the west and the Evans Mill Road and Lithonia

Industrial Boulevard interchanges to the east have already been reconstructed, and this project is a good opportunity to replace the Panola Road bridge over I-20.

- A DDI would perform similar to a regular diamond interchange but would require additional impacts to right-of-way and a structure at the northwest quadrant of the interchange.
- A compressed diamond interchange was determined to have the least impact to adjoining right-of-way and structures and was chosen as the preferred alternative.
- Shamir confirmed that a DDI concept utilizing the existing bridge was not developed or analyzed to verify the cost and performance of a DDI.

- Glenn Bowman (GDOT) mentioned that with the other Panola Road corridor improvements moving to long range, an evaluation of the interchange is needed to determine whether sufficient operational improvements can be provided while utilizing the existing bridge. If the selected alternative were to operate and extend the life of the interchange for the next 10 to 15 years, an immediate, significant savings in construction and right-of-way costs can be realized.
- The condition of the existing bridge was discussed. The sufficiency rating is currently 73.
- Bill DuVall (GDOT) confirmed that the bridge has been widened a few times over the years. He is not aware of any issues with the bridge, including recurring collision damages, but he will review available information and share his findings with the group.
- It was decided that a deck condition survey and bridge condition survey should be conducted to evaluate the bridge.

Follow-up Items

- **ARCADIS** to prepare a conceptual layout and conduct a traffic analysis to evaluate the cost and operational benefits of construction of a DDI utilizing the existing bridge.
- **Bill Duvall** to review existing condition data and share his findings with the group (completed and attached to these minutes).
- **Vinesha Pegram** to request bridge and deck condition surveys.

Poudel, Shamir

From: DuVall, Bill <bduvall@dot.ga.gov>
Sent: Wednesday, December 17, 2014 11:16 AM
To: Pegram, Vinesha C.
Cc: Bowman, Glenn; Poudel, Shamir
Subject: Panola Road over I-20, 0002868
Attachments: FS23_10328GDOT261454DV;2010-11-24-08.41.30.000.PDF

Structure ID 089-0228-0

Vinesha,

As a follow up to the discussion of regarding Panola Road, I've looked at the bridge maintenance file. I did not find a current condition survey for the bridge and there might not be one since the project was to replace the bridge.

The bridge is in fair condition. However, the beams have been impacted over the westbound lanes. The existing vertical clearance in the westbound direction is 16'-7". Prior to this bridge in the westbound direction, there are bridges with lower clearance out in the Conyers area. If the structure needs to be widened I would recommend widening on the west side of the bridge which should not reduce the vertical clearance, see attached.

Although the load rating is slightly below standard, the bridge does not require posting.

If the bridge is to be widened you will need to send a request to Andy Doyle, Bridge Maintenance Engineer, for a condition survey and recommendations for maintenance. Let me know if you need anything else.

Bill

Bill DuVall, PE, MSCE
Assistant State Bridge Engineer
Georgia DOT, Office of Bridge Design
(404) 631-1883 work
(404) 895-4943 mobile

During inclement winter weather, Georgia DOT commits to achieve and maintain passable road conditions on two lanes of interstates first and then state routes from the most heavily traveled to the least traveled. The Department urges travelers to exercise caution, be patient, and call 511 for updated information on roadway conditions before getting on the road during a winter weather event. Visit us at http://www.dot.ga.gov/winterweather; or follow us on http://www.facebook.com/GeorgiaDOT and http://twitter.com/gadeptoftrans

GEORGIA DEPARTMENT OF TRANSPORTATION

X-Vertical Clearance Report

District: 7 **Inspection Date:** 4/30/2010 **Inspection Area:** 07
Bridge Inspector: Jeramy Durrence **Over:** I-20
Location ID: 089-09012M-018.07E **County:** DeKalb **Skew:** 15
Structure ID: 089-0228-0 **Road Name:** PANOLA ROAD

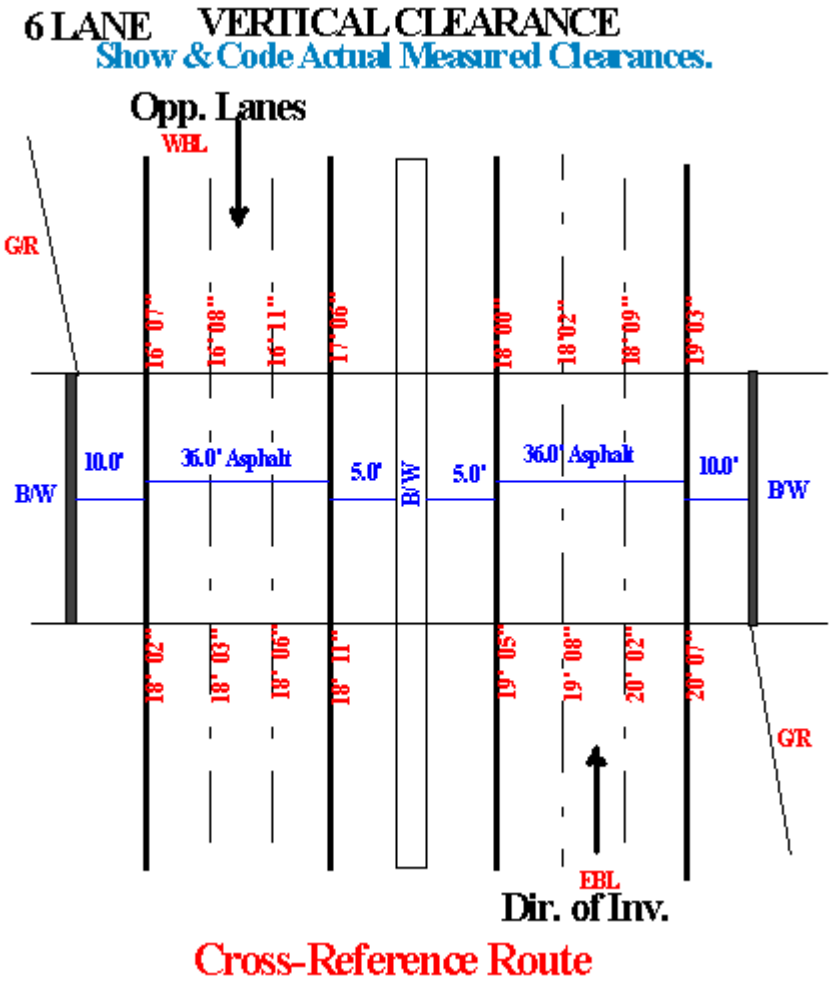

XLocationID **089-00402D-071.29E**
XRef ID: 089-0228-0-A

Min Clearance Over: 99-99 **Min Clearance Under:** 16-07 **Clearance Type:** H
Act Min Vert. Odom: 18-00 **Post Min Vert. Odom:** 00-00
Act Min Vert. Opp: 16-07 **Post Min Vert. Opp:** 00-00
Max Min Vert. Clear: 18-09 **Direction:** East

Lat Under Cl Right: 10.00 **Left:** 5.00 **Lateral Type:** 6

Rating-Under Cl Horz/Vert: 6 **Total Horizontal Clearance (ft):** 51.00

ARCADIS U.S., Inc.
2410 Paces Ferry Road
#400
Atlanta
Georgia 30339
Tel 770 431 8666
Fax 770 435 2666

MEETING REPORT

Subject:
Panola Road at I-20 Interchange
PI 000268
DeKalb County, Georgia

Department:
Transportation

ARCADIS Project No.:
GADT01005

Place/Date of Meeting:
Georgia Department of Transportation
Office of Director of Engineering
March 13, 2015

Report No.:
8

Minutes by:
Shamir Poudel

Issue Date:
March 17, 2015

Participants:
Glenn Bowman
Dave Peters
Kim Nesbitt
Kate Colberg
Shamir Poudel

Copies:
Vinesha Pegram

A meeting was held to discuss concept report comments received from the Georgia Department of Transportation (GDOT) Director of Engineering and the Chief Engineer for the Panola Road at I-20 Interchange project (PI 000268). This meeting was a follow-up to the last meeting held on December 17, 2014 with the Director of Engineering and focused on further evaluation of the diverging diamond interchange (DDI) for the Panola Road at I-20 interchange. Following are a summary of the meeting discussion and follow-up items.

- Shamir Poudel (ARCADIS project manager) provided background on the project development and the alternate selection thought process:
  - Three interchange alternatives were considered: a regular diamond interchange, a compressed diamond interchange, and a DDI.
  - For all three alternatives, it was assumed that the bridge will be replaced due to its age and previous widening. The Panola Road alignment was shifted to the west to allow for staged construction.
  - The DDI alternative was determined to perform similar to the regular diamond interchange alternative but would require additional impacts to right-of-way (ROW) and a structure at the northwest quadrant of the interchange.

- The compressed diamond was determined to have the least amount of impacts to adjoining ROW and structures and was therefore chosen as the preferred alternative.

- Shamir Poudel mentioned that the Panola Road at I-20 interchange is one of five segments that make up the Panola Road corridor improvements that extend between Snapfinger Road/SR 155 to the south and Covington Highway/SR 12 to the north. The Panola Road corridor improvements originally included safety, operational, and capacity improvements (for most segments). Due to funding constraints, the capacity improvements are no longer part of the corridor improvements and the project goals instead include operational and safety improvements. With the change in the nature of the corridor improvements, ARCADIS was directed to evaluate the interchange to determine if sufficient operational improvements can be provided while utilizing the existing bridge. If this option operates sufficiently and extends the life of the bridge for the next 10 to 15 years, there could be a significant savings in immediate construction and ROW costs.

- Shamir Poudel presented the draft traffic analysis results. Due to the congested nature of the area and the proximity of I-20, travel time and interchange throughputs were analyzed for comparison between the following interchange improvement options:

- No-Build Option – Retain existing diamond interchange configuration.
- DDI Option – Convert the existing interchange to a DDI using the existing bridge width. Also includes operational improvements along Panola Road intersections north and south of I-20.
- Diamond Interchange Option – Widen existing bridge to provide an additional southbound to eastbound left-turn lane. Also includes operational improvements along Panola Road intersections north and south of I-20.
- Both the DDI and diamond interchange options perform similarly and show improvements to most of the interchange movements over the no-build option.
- Southbound to westbound movements experience negative impacts as shown by increased in travel time as compared to the no-build option.
- Both the DDI and diamond interchange options experience an increased utilization of the interchange as shown by an increase in throughput as compared to the no-build option.
- Congestion along I-20 westbound negatively impacts the operations of the interchange. I-20 in the project area has three lanes in each direction

- The crash history for the project area was discussed. The crash rates are high and significantly exceed statewide averages for similar locations. High rates of angle crashes and rear-end crashes occur in the project area. Installation of proposed raised median and operational improvements should positively impact the crash rates in the project area.

- The concept was discussed briefly. The lane width on the existing Panola Road bridge will have to be 11 feet to avoid widening of the existing bridge.

- It was decided that ARCADIS will evaluate the northern end of the project to determine if the project can be ended sooner than currently shown. This could reduce the construction and ROW cost of the project.

- A local access road is proposed west of Panola Road and north of I-20 to serve the properties between Panola Industrial Boulevard and Snapfinger Park Drive. The Snapfinger Park Drive intersection with Panola Road is currently proposed to be closed. Glenn Bowman mentioned that a “right in only” access will improve access to these properties without major impacts to the operations of Panola Road. Not allowing a “right out” access is still a good idea and could impact the operations of dual right lanes proposed to serve southbound to westbound traffic.

- The estimated construction cost of the DDI option is approximately $12.1 million. Previous cost for the project that included bridge replacement was $26.5 million.

- Shamir Poudel mentioned that the next major milestone is the concept report approval. It was discussed and agreed that another concept team meeting (CTM) should be held to review the new project concept, which has some major changes from the concept presented during the last CTM. Shamir will work will Vinesha Pegram to establish the revised schedule based on the project changes.

- The scope of the traffic analysis required for this project was discussed. Discussions have been held with the Federal Highway Administration (FHWA) regarding the need for a full interchange modification report (IMR). FHWA has granted an IMR waiver in the past due to minimal impacts to the I-20 gore points. The revised concept should be discussed with FHWA to validate the previously approved IMR waiver. At most, a short-form IMR may be required to document the project changes.

- Given the operational nature of the project, a 10-year design life should be sufficient to reflect the project benefits and compare them to the no-build option.

Follow-up Items

- **ARCADIS (Shamir Poudel)** to evaluate the northern project limits to determine if the project length can be shortened.

- **ARCADIS (Shamir Poudel)** to modify the concept to allow “right in only” access to Snapfinger Park Drive.

- **ARCADIS (Shamir Poudel) and GDOT (Vinesha Pegram)** to meet and prepare revised project schedule accounting for revision of concept report and another CTM.

- **ARCADIS (Shamir Poudel) and GDOT (Vinesha Pegram)** to verify with appropriate GDOT subject matter experts whether a 10-year project design life will suffice.

- **GDOT (Vinesha Pegram)** to present the revised concept to FHWA after the CTM to validate the previously approved IMR waiver.

Attachment:

Draft Traffic Analysis Summary

Panola Road at I-20 (PI 000268)
Draft Traffic Analysis Result
3/13/15

Travel Time Endpoint Locations:

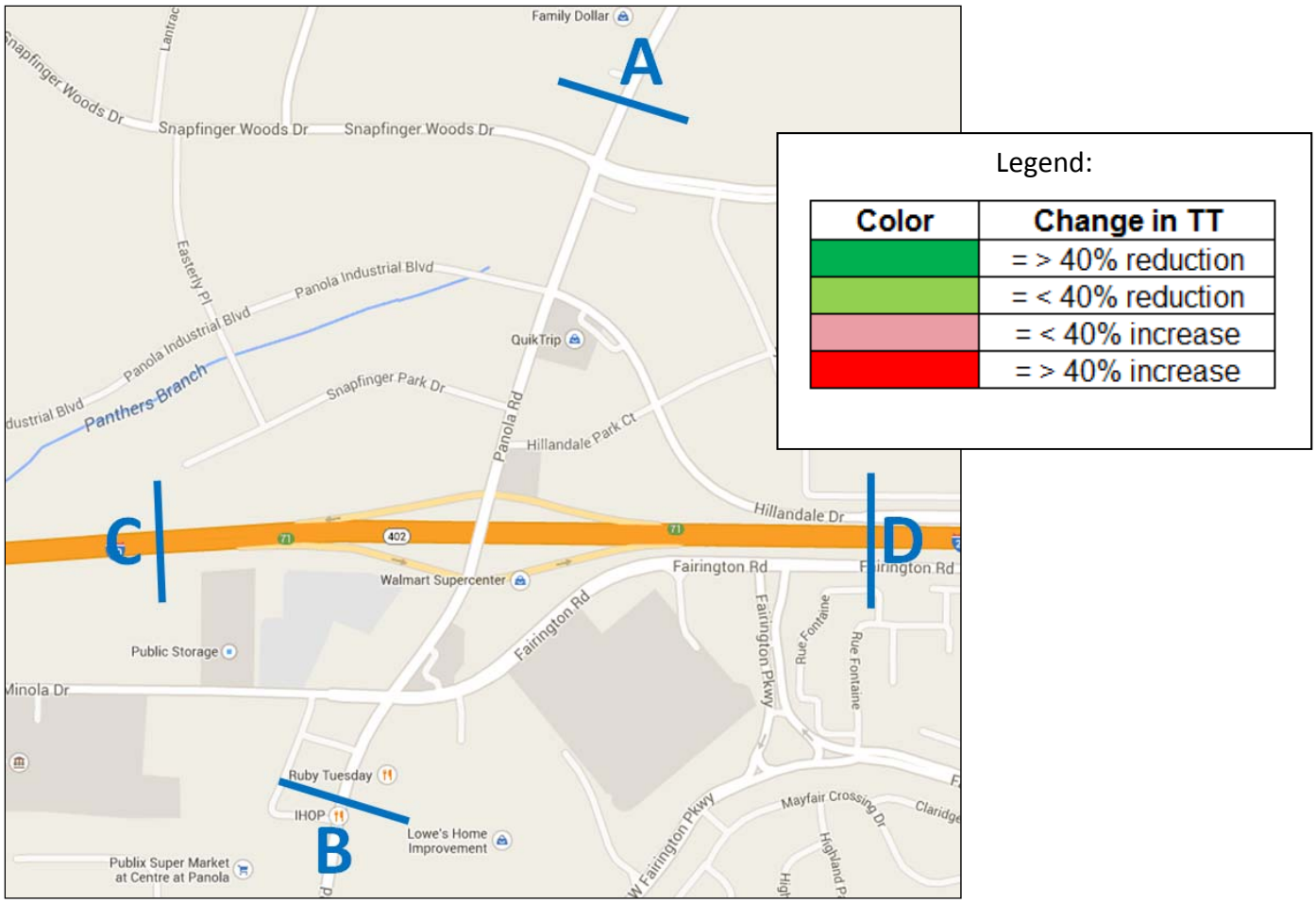

AM Peak Hour Travel Times:

Travel Time Segment	Distance (miles)	Existing Year (2014)	Interim Year (2030)				
			No-Build	DDI		Diamond	
		Travel Time (minutes)	Travel Time (minutes)	Travel Time (minutes)	Change in Travel Time	Travel Time (minutes)	Change in Travel Time
A to B	0.7	2.5	1.7	2.0	24%	1.5	-7%
A to D	1.0	4.1	3.7	1.8	-51%	3.6	0%
A to C	0.8	7.3	5.4	15.3	182%	14.1	162%
B to A	0.7	2.2	4.0	2.5	-36%	3.5	-12%
B to D	0.8	1.6	2.6	1.7	-36%	2.8	5%
B to C	0.8	7.8	15.3	4.1	-73%	15.5	1%
C to A	0.9	3.3	3.3	3.3	0%	3.0	-8%
C to B	0.7	1.5	1.5	1.5	-1%	1.6	4%
D to A	0.8	2.6	3.1	3.7	20%	2.8	-10%
D to B	0.8	3.6	4.2	3.7	-11%	3.7	-12%

Travel Time Endpoint Locations:

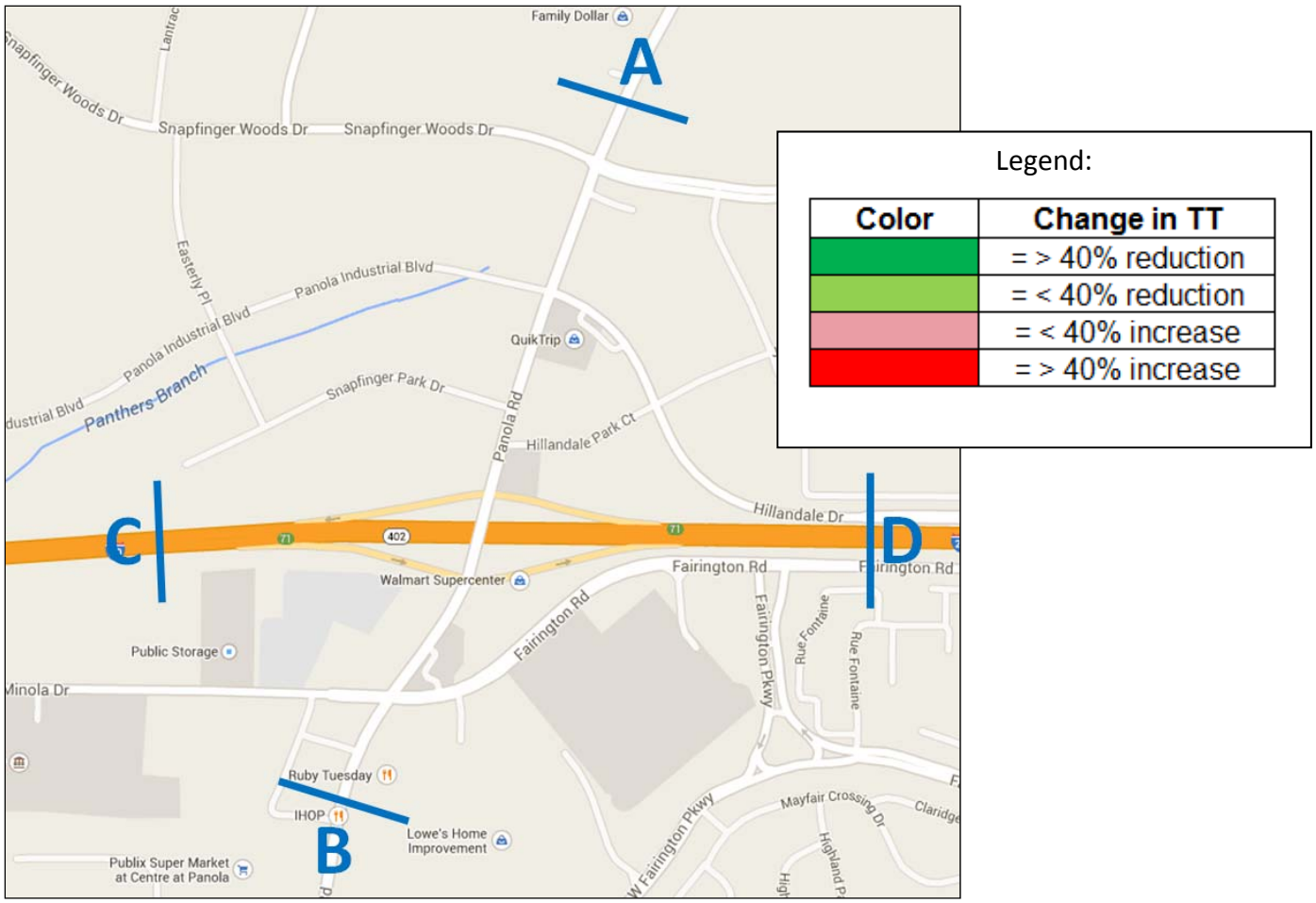

PM Peak Hour Travel Times:

Travel Time Segment	Distance (miles)	Existing Year (2014)	Interim Year (2030)				
			No-Build	DDI		Diamond	
		Travel Time (minutes)	Travel Time (minutes)	Travel Time (minutes)	Change in Travel Time	Travel Time (minutes)	Change in Travel Time
A to B	0.7	1.7	1.7	2.0	17%	1.8	2%
A to D	1.0	2.6	3.7	2.1	-43%	2.6	-31%
A to C	0.8	1.8	1.8	1.8	0%	1.6	-13%
B to A	0.7	2.3	3.5	1.8	-49%	2.5	-30%
B to D	0.8	1.9	2.0	2.0	0%	1.8	-8%
B to C	0.8	3.9	3.9	1.9	-52%	2.4	-38%
C to A	0.9	3.2	4.3	2.5	-41%	2.5	-41%
C to B	0.7	3.7	2.2	1.8	-17%	2.1	-5%
D to A	0.8	1.9	2.6	3.3	25%	2.3	-12%
D to B	0.8	2.6	3.8	2.1	-45%	2.9	-23%

Interchange Throughput Location:

2030 Interchange Throughput:

Scenario	AM Throughput	PM Throughput
No-Build	4,215	4,691
DDI	4,856	6,053
Diamond	4,343	5,879