DATE$$$	TIME$$$	PRF	DGN	STATE	PROJECT NUMBER	SHEET NO.	TOTAL SHEETS
$USER$		$$PENTABLE$$		GA	CSSFT-0008-00(314)		

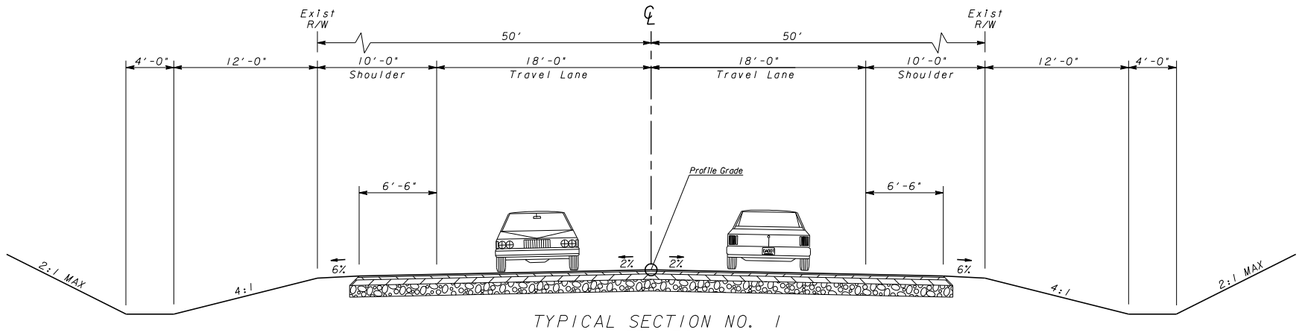

TYPICAL SECTION NO. 1
SR 136
STA 24+75 TO STA 130+75

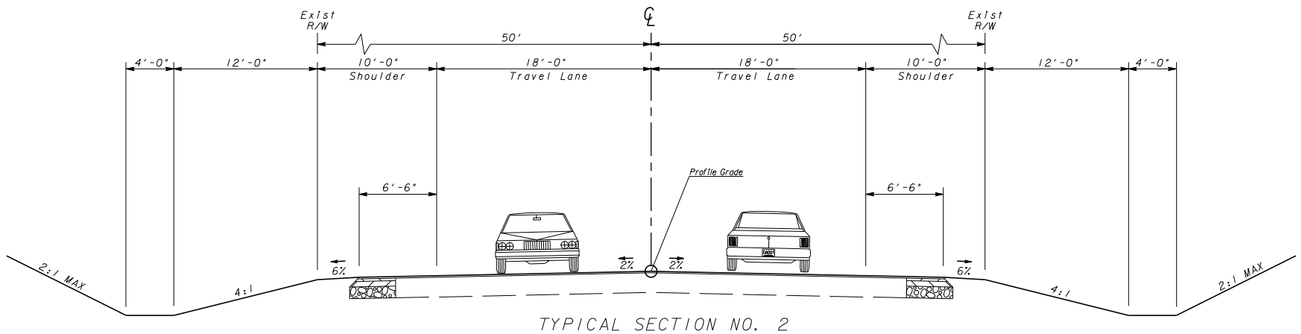

TYPICAL SECTION NO. 2
SR 136
STA 24+75 TO STA 130+75
OUTSIDE AREAS OF GEOMETRIC AND
INTERSECTION IMPROVEMENTS

PROPERTY AND EXISTING R/W LINE
REQUIRED R/W LINE
CONSTRUCTION LIMITS
EASEMENT FOR CONSTR & MAINTENANCE OF SLOPES
EASEMENT FOR CONSTR OF SLOPES
EASEMENT FOR CONSTR OF DRIVES

BEGIN LIMIT OF ACCESS.....BLA
END LIMIT OF ACCESS.....ELA
LIMIT OF ACCESS
REQ'D R/W & LIMIT OF ACCESS

GEORGIA
DEPARTMENT OF TRANSPORTATION

GRESHAM SMITH AND PARTNERS

SCALE IN FEET
0 20 40 80

REVISION DATES

STATE OF GEORGIA
DEPARTMENT OF TRANSPORTATION
OFFICE: PROGRAM DELIVERY

TYPICAL SECTIONS

PROJECT: CSSFT-0008-00(314)
COUNTY: PICKENS

DRAWING No. 5-001

1/5/2009 GPLN

DATE$$$	TIME$$$	PRF	DGN	STATE	PROJECT NUMBER	SHEET NO.	TOTAL SHEETS
$USER$		$$PENTABLE$$		GA	CSSFT-0008-00(314)		

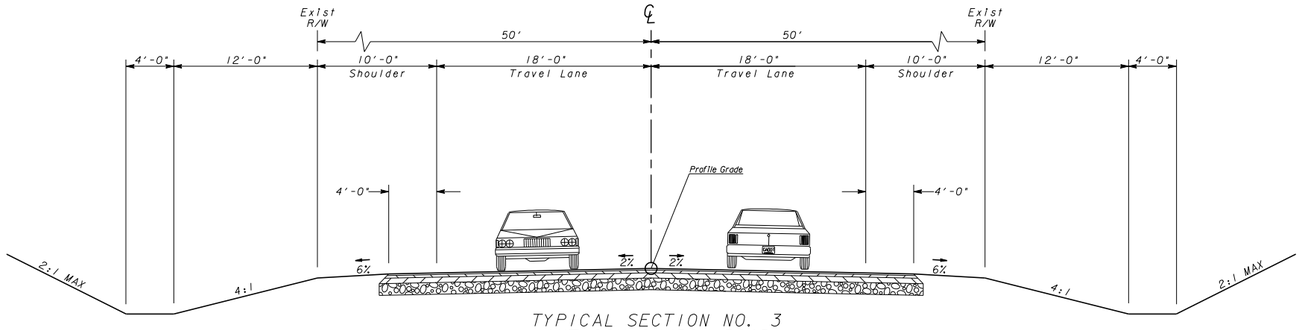

TYPICAL SECTION NO. 3
ANTIOCH CHURCH ROAD
STA 300+00 TO STA 301+50

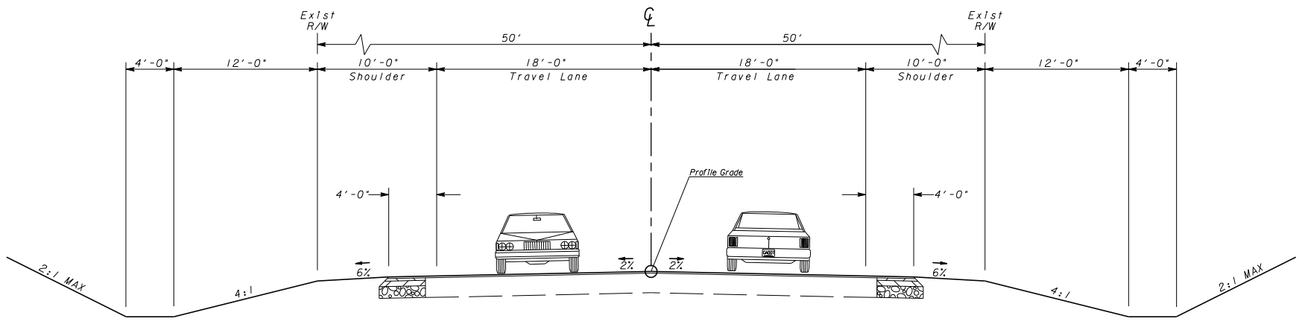

TYPICAL SECTION NO. 4
ANTIOCH CHURCH ROAD
STA 300+00 TO STA 301+50
OUTSIDE AREAS OF GEOMETRIC AND
INTERSECTION IMPROVEMENTS

PROPERTY AND EXISTING R/W LINE
REQUIRED R/W LINE
CONSTRUCTION LIMITS
EASEMENT FOR CONSTR & MAINTENANCE OF SLOPES
EASEMENT FOR CONSTR OF SLOPES
EASEMENT FOR CONSTR OF DRIVES

BEGIN LIMIT OF ACCESS.....BLA
END LIMIT OF ACCESS.....ELA
LIMIT OF ACCESS
REQ'D R/W & LIMIT OF ACCESS

GEORGIA
DEPARTMENT OF TRANSPORTATION

GRESHAM SMITH AND PARTNERS

SCALE IN FEET
0 20 40 80

REVISION DATES

STATE OF GEORGIA
DEPARTMENT OF TRANSPORTATION
OFFICE: PROGRAM DELIVERY

TYPICAL SECTIONS

PROJECT: CSSFT-0008-00(314)
COUNTY: PICKENS

DRAWING No. 5-002

1/5/2009 GPLN

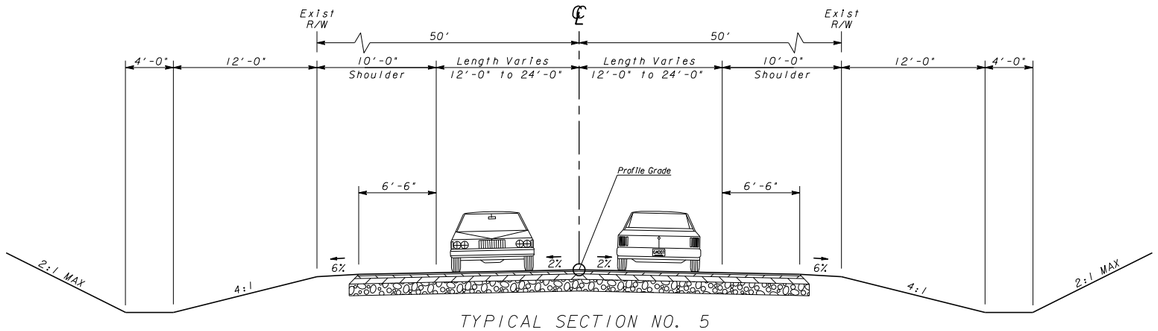

TYPICAL SECTION NO. 5
SR 136
STA 139+60 TO STA 157+80

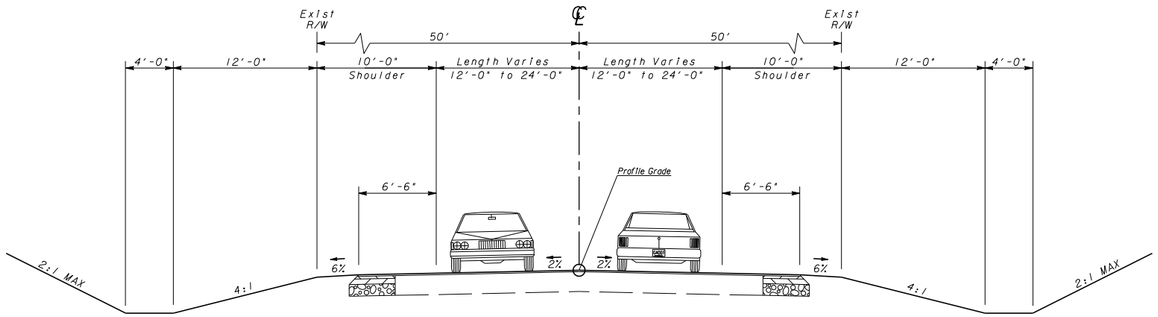

TYPICAL SECTION NO. 6
SR 136
STA 139+60 TO STA 157+80
OUTSIDE AREAS OF GEOMETRIC AND
INTERSECTION IMPROVEMENTS

PROPERTY AND EXISTING R/W LINE
REQUIRED R/W LINE
CONSTRUCTION LIMITS
EASEMENT FOR CONSTR & MAINTENANCE OF SLOPES
EASEMENT FOR CONSTR OF SLOPES
EASEMENT FOR CONSTR OF DRIVES

BEGIN LIMIT OF ACCESS.....BLA
END LIMIT OF ACCESS.....ELA
LIMIT OF ACCESS
REQ'D R/W & LIMIT OF ACCESS

GEORGIA
DEPARTMENT OF TRANSPORTATION

GRESHAM SMITH AND PARTNERS

SCALE IN FEET
0 20 40 80

REVISION DATES

STATE OF GEORGIA
DEPARTMENT OF TRANSPORTATION
OFFICE: PROGRAM DELIVERY

TYPICAL SECTIONS

PROJECT: CSSFT-0008-00(314)
COUNTY: PICKENS

DRAWING No. 5-003

1/5/2009 GPLN

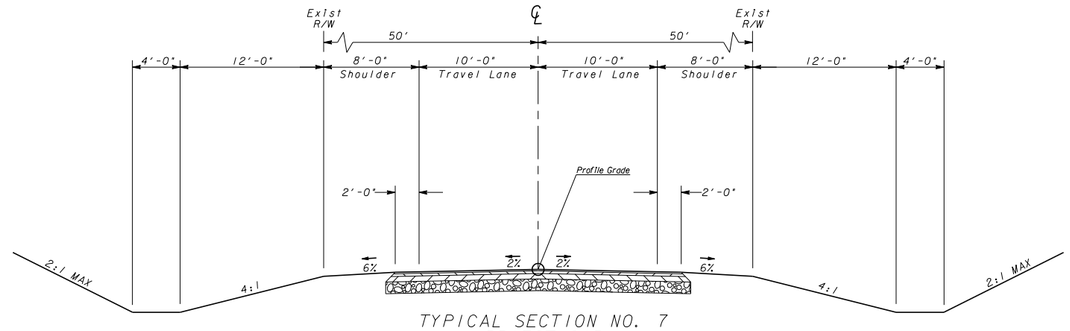

TYPICAL SECTION NO. 7
PRIEST CIR
STA 401+48 TO STA 403+00

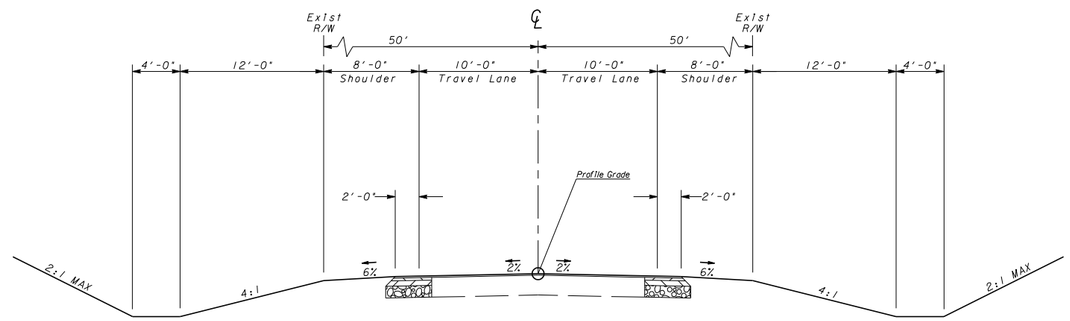

TYPICAL SECTION NO. 8
PRIEST CIR
STA 401+48 TO STA 403+00
OUTSIDE AREAS OF GEOMETRIC AND
INTERSECTION IMPROVEMENTS

PROPERTY AND EXISTING R/W LINE
REQUIRED R/W LINE
CONSTRUCTION LIMITS
EASEMENT FOR CONSTR & MAINTENANCE OF SLOPES
EASEMENT FOR CONSTR OF SLOPES
EASEMENT FOR CONSTR OF DRIVES

BEGIN LIMIT OF ACCESS.....BLA
END LIMIT OF ACCESS.....ELA
LIMIT OF ACCESS
REQ'D R/W & LIMIT OF ACCESS

GEORGIA
DEPARTMENT OF TRANSPORTATION

GRESHAM SMITH AND PARTNERS

SCALE IN FEET
0 20 40 80

REVISION DATES

STATE OF GEORGIA
DEPARTMENT OF TRANSPORTATION
OFFICE: PROGRAM DELIVERY

TYPICAL SECTIONS

PROJECT: CSSFT-0008-00(314)
COUNTY: PICKENS

DRAWING No. 5-004

1/5/2009 GPLN

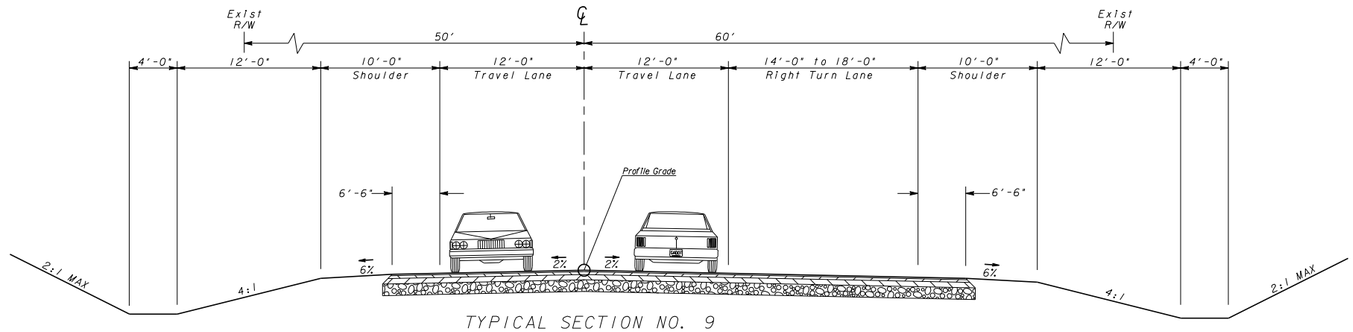

TYPICAL SECTION NO. 9
SR 136
STA 52+75 TO STA 56+00 &
STA 136+00 TO STA 152+00

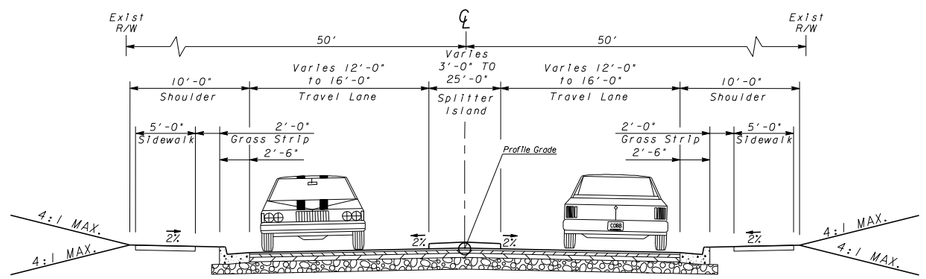

TYPICAL SECTION NO. 10
SR 136
STA 104+50 TO STA 108+00 &
STA 139+70 TO 158+00

PROPERTY AND EXISTING R/W LINE	—PL—
REQUIRED R/W LINE	
CONSTRUCTION LIMITS	—C—F—
EASEMENT FOR CONSTR & MAINTENANCE OF SLOPES	
EASEMENT FOR CONSTR OF SLOPES	
EASEMENT FOR CONSTR OF DRIVES	

BEGIN LIMIT OF ACCESS	BLA
END LIMIT OF ACCESS	ELA
LIMIT OF ACCESS	
REQ'D R/W & LIMIT OF ACCESS	

GEORGIA
DEPARTMENT OF TRANSPORTATION

GRESHAM SMITH AND PARTNERS

SCALE IN FEET
0 20 40 80

REVISION DATES

STATE OF GEORGIA
DEPARTMENT OF TRANSPORTATION
OFFICE: PROGRAM DELIVERY

TYPICAL SECTIONS

PROJECT: CSSFT-0008-00(314)
COUNTY: PICKENS

DRAWING No. 5-005

1/5/2009 GPLN

DATE$$$	TIME$$$	PRF	DGN	STATE	PROJECT NUMBER	SHEET NO.	TOTAL SHEETS
$USER$		$$PENTABLE$$		GA	CSSFT-0008-00(314)		

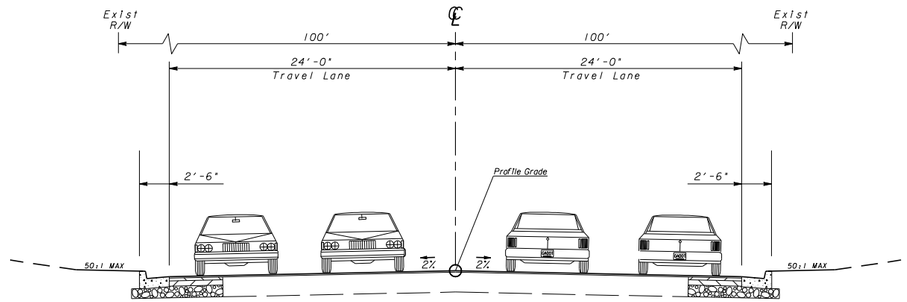

TYPICAL SECTION NO. 11
SR 136/SR 515 CONNECTOR
STA 503+00 TO STA 507+50

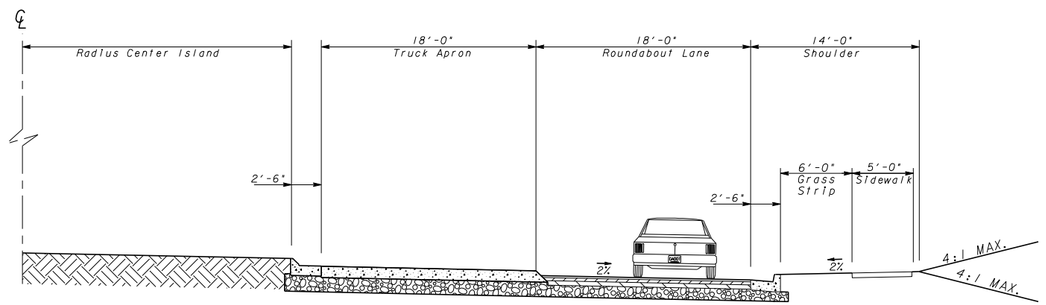

TYPICAL SECTION NO. 12
SR 136
INSIDE AREAS OF GEOMETRIC AND
INTERSECTION IMPROVEMENTS AT
SR 136 CONNECTOR AND OLD ELLIJAY
ROAD ROUNDABOUTS

PROPERTY AND EXISTING R/W LINE
REQUIRED R/W LINE
CONSTRUCTION LIMITS
EASEMENT FOR CONSTR & MAINTENANCE OF SLOPES
EASEMENT FOR CONSTR OF SLOPES
EASEMENT FOR CONSTR OF DRIVES

BEGIN LIMIT OF ACCESS.....BLA
END LIMIT OF ACCESS.....ELA
LIMIT OF ACCESS
REQ'D R/W & LIMIT OF ACCESS

GEORGIA
DEPARTMENT OF TRANSPORTATION

GRESHAM SMITH AND PARTNERS

SCALE IN FEET
0 20 40 80

REVISION DATES

STATE OF GEORGIA
DEPARTMENT OF TRANSPORTATION
OFFICE: PROGRAM DELIVERY

TYPICAL SECTIONS

PROJECT: CSSFT-0008-00(314)
COUNTY: PICKENS

DRAWING No. 5-006

1/5/2009 GPLN