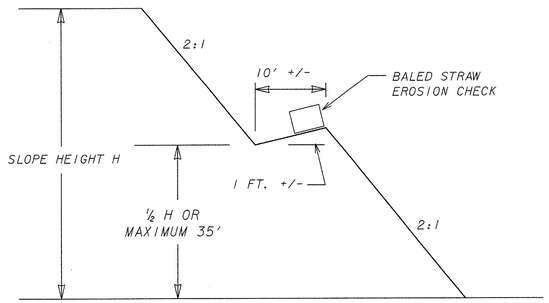

NOTES:

1. FOR SLOPE HEIGHTS LESS THAN 70 FT. BUT GREATER THAN 35 FT., A BERM SHOULD BE CONSTRUCTED AS APPROX. 1/2 THE SLOPE HEIGHT. FOR SLOPE HEIGHTS GREATER THAN 70 FT., CONSTRUCT A BERM EVERY 35 FT.
2. THE BERM SHOULD BE SLOPED TO DRAIN AND SHOULD BE CONNECTED TO CONCRETE FLUMES TO REMOVE WATER FROM SLOPE.
3. A DRAINAGE DITCH SHOULD BE CONSTRUCTED AT THE TOP OF CUT SLOPES WHERE WATER DRAINS TOWARDS SLOPE.

BERM DETAIL FOR CUTS/FILLS OVER 35 FT

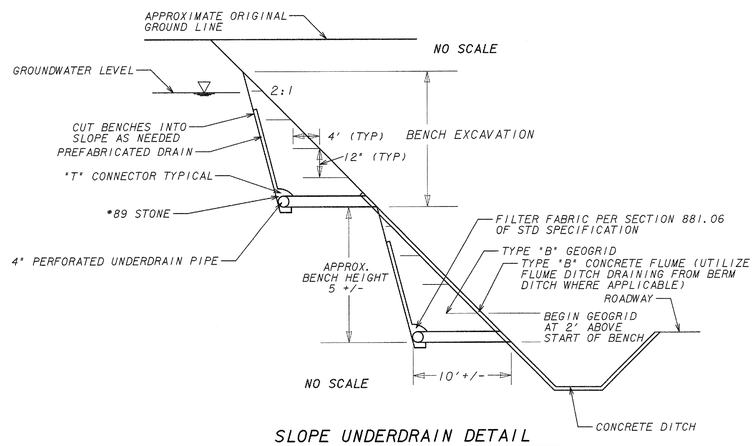

SLOPE UNDERDRAIN DETAIL

STA 400+50 ± TO 402+50 ± LT & RT

NOTES:

1. SLOPE DRAINS SHALL BE USED AS DIRECTED BY THE ENGINEER AT THOSE AREAS WHICH HAVE GROUNDWATER IN EXCAVATIONS.
2. AFTER WATER IS ENCOUNTERED IN SLOPE, A 10'+/- WIDE BENCH AND DRAINAGE TRENCH IS CUT INTO SLOPE AS SHOWN. #89 STONES AND PERFORATED UNDERDRAIN PIPE IS THE PLACED INTO THE TRENCH.
3. THE PERFABRICATED DRAIN SHALL BE TIED INTO THE DRAINAGE TRENCH AS SHOWN. SOLID UNDERDRAIN OR SLOPE DRAINS ARE TIED INTO THE PERFORATED PIPES WITH "T" CONNECTORS AT INTERVALS OF 200' +/-.
4. TYPE "B" GEOGRID 4 FEET LONG TO BE PLACED AT 12" INTERVALS (VERTICALLY) BEGINNING 2' ABOVE THE BOTTOM OF THE BENCH.
5. THE PRE-FABRICATED DRAIN SHALL BE AS PER GA. QUALIFIED PRODUCTS LIST NO. 47.
6. ADDITIONAL BENCHES MAY BE REQUIRED TO PROVIDE CONTINUOUS COVERAGE FROM GROUDWATER LEVEL TO BOTTOM OF SLOPE. THE LENGTH OF EACH BENCH EXCAVATION WILL BE MEASURED SEPERATELY FOR PAYMENT.

TYPICAL SECTION DETAIL TO BE USED WHEN EXISTING PAVEMENT IS TO BE RESURFACED WITH TWO INCHES OR MORE OF ASPHALTIC CONCRETE

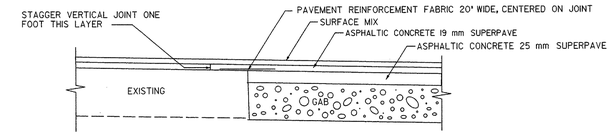

TYPICAL SECTION DETAIL TO BE USED WHEN EXISTING PAVEMENT IS TO BE RESURFACED WITH LESS THAN TWO INCHES OF ASPHALTIC CONCRETE

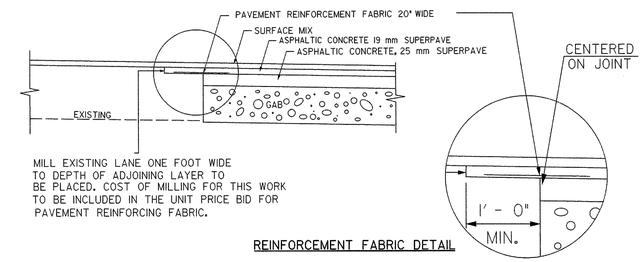

REINFORCEMENT FABRIC DETAIL

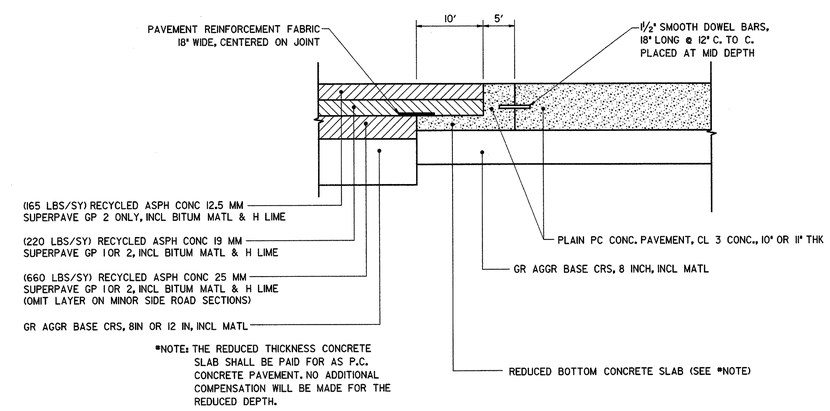

*NOTE: THE REDUCED THICKNESS CONCRETE SLAB SHALL BE PAID FOR AS P.C. CONCRETE PAVEMENT. NO ADDITIONAL COMPENSATION WILL BE MADE FOR THE REDUCED DEPTH.

CONCRETE PAVEMENT TO ASPHALT PAVEMENT TRANSITION DETAIL

N.T.S.

Heath & Lineback Engineers
INCORPORATED
2390 CANTON ROAD, BUILDING 200
MARIETTA, GEORGIA 30066-5393

NO SCALE

REVISION DATES

STATE OF GEORGIA
DEPARTMENT OF TRANSPORTATION
OFFICE: PROGRAM DELIVERY

TYPICAL SECTIONS

STP00-00MS-00(007)
SOUTH CALHOUN BYPASS

DRAWING No. 05-013