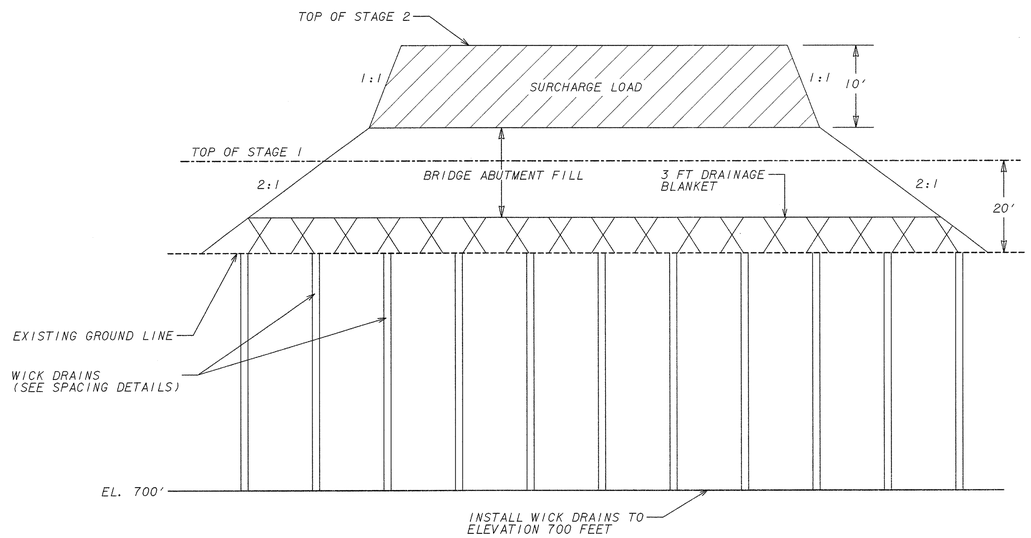

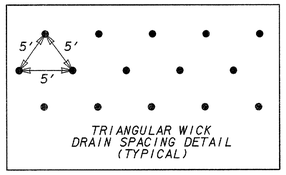

TRIANGULAR WICK DRAIN SPACING DETAIL (TYPICAL)

NOTES:

1. RECOMMENDED CONSTRUCTION PROCEDURE AND SEQUENCE:
   - A. GRADE THE EXISTING GROUND SURFACE (WITH MINOR FILL AS NEEDED) TO CREATE POSITIVE DRAINAGE AWAY FROM THE FILL AREA.
   - B. PLACE THE 3' THICK DRAINAGE BLANKET.
   - C. INSTALL WICK DRAINS TO ELEVATION 700'.
   - D. PLACE BRIDGE ABUTMENT FILL AND SURCHARGE UP TO STAGE-1 (20 FEET HIGH) AS SHOWN IN ACCORDANCE WITH STANDARD SPECIFICATIONS.
   - E. LEAVE STAGE-1 FILL IN PLACE FOR 60 DAYS.
   - F. PLACE STAGE-2 ABUTMENT FILL AND SURCHARGE IN ACCORDANCE WITH STANDARD SPECIFICATIONS.
   - G. LEAVE STAGE-2 ABUTMENT FILL AND SURCHARGE IN PLACE FOR 60 DAYS AFTER COMPLETION OF PLACEMENT.
   - H. REMOVE THE SURCHARGE AFTER THE ABOVE WAITING PERIOD.
   - I. PREPARE SUBGRADE FOR PAVEMENT CONSTRUCTION.

WICK DRAIN AND SURCHARGE DETAIL

SOUTH CALHOUN BYPASS
STA 391+00± TO STA 392+00±
STA 393+00± TO STA 394+00±

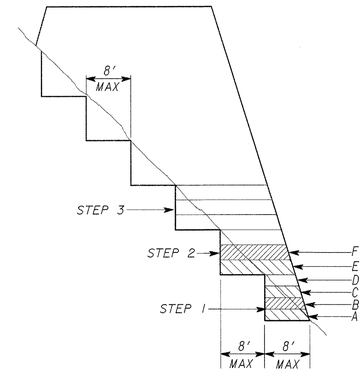

BENCHING DETAIL

NO SCALE

1. WHERE THE EMBANKMENT IS TO BE PLACED ON A HILLSIDE OR ANOTHER EXISTING EMBANKMENT HAVING A SLOPE OF 3 TO 1 OR STEEPER. THE FOUNDATION SHALL BE BENCHED WHILE THE EMBANKMENT IS BEING MADE. (SEE DIAGRAM AT LEFT.)
2. THE DIAGRAM SHOWS THAT BEFORE LAYER "A" IS PLACED, THE FIRST STEP (1) IS CUT INTO THE SLOPE A MAXIMUM DISTANCE OF ABOUT 8' (ABOUT ¾ THE WIDTH OF THE TYPICAL D-8 BULLDOZER BLADE). SUCCESSIVE LAYERS B, C, AND D ARE THEN PLACED BEFORE LAYER "E" IS PLACED. THE SECOND STEP IS CUT 8' INTO THE SLOPE AND SUCCESSIVE LAYERS ARE AGAIN PLACED. IF IT IS ANTICIPATED THAT THE VERTICAL PART OF THE STEP WILL EXCEED 4' IF AN 8' HORIZONTAL CUT IS MADE, THEN THE ACTUAL CUT STOPS WHEN THE VERTICAL PART REACHES A MAXIMUM OF 4' ALLOWING THE HORIZONTAL DISTANCE TO VARY.
3. THE PROCESS OF BENCHING IS CONSIDERED INCIDENTAL TO THE ITEM OF UNCLASSIFIED EXCAVATION AND BORROW IN CONSTRUCTION OF THE EMBANKMENT AND NO ADDITIONAL MEASUREMENT OF QUANTITY OR PAYMENT WILL BE MADE FOR BENCHING.

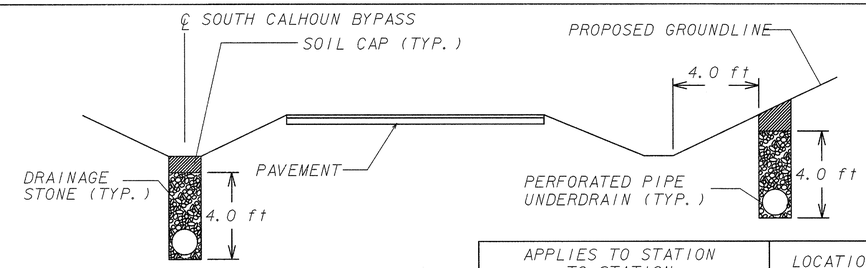

APPLIES TO STATION TO STATION	LOCATION
297+50 +/- TO 300+50 +/-	LT & RT
312+50 +/- TO 315+50 +/-	LT & RT
364+50 +/- TO 367+50 +/-	LT & RT
379+50 +/- TO 382+50 +/-	LT & RT
400+50 +/- TO 420+50 +/-	LT & RT

GENERAL NOTES:

1. PERFORATED UNDERDRAIN TO BE PLACED 4 FT. IN ACCORDANCE WITH STANDARD 9029B.
2. PIPES SHALL BE TIED INTO CROSS PIPES.
3. UNDERDRAINS SHALL BE INSTALLED AT THE DIRECTION OF THE ENGINEER.
4. WHERE UNDERRAINS WILL BE INSTALLED IN CONJUNCTION WITH SLOPE DRAINS, SLOPE DRAINS SHALL BE PLACED AT A SUFFICIENT DISTANCE ABOVE THE UNDERDRAIN AS NOT TO INTERFERE WITH UNDERDRAIN INSTALLATION
5. RIGHT SIDE SHOWN. MIRROR DETAIL FOR LEFT SIDE.

UNDERDRAIN PLACEMENT
DETAIL FOR HIGH WATER TABLE AREAS

Heath & Lineback Engineers
INCORPORATED
2390 CANTON ROAD, BUILDING 200
MARIETTA, GEORGIA 30066-5393

NO SCALE

REVISION DATES

STATE OF GEORGIA
DEPARTMENT OF TRANSPORTATION
OFFICE: PROGRAM DELIVERY

TYPICAL SECTIONS

STP00-00MS-00(007)
SOUTH CALHOUN BYPASS

DRAWING No. 05-012