7/30/2014 12:59:15 PM \\GDOT-DSN1\GOPLOT\QCF\d2_PDF_Out_mono_200dpi.qcf fgrimes Q:\Emanuel\222630 Emanuel Co\Microstation\222630_05-002.prf

REVISION DATES	STATE	PROJECT NUMBER	SHEET NO.	TOTAL SHEETS
	GA.	NH000-0038-01(040)		

S.R 4/U.S. 1

NOT TO SCALE

TYPICAL SECTION # 3 - URBAN MAINLINE TANGENT SECTION

NOTE:
SEE DRAWING 5-7 & 5-8 FOR ADDITIONAL TYPICAL SECTION INFORMATION

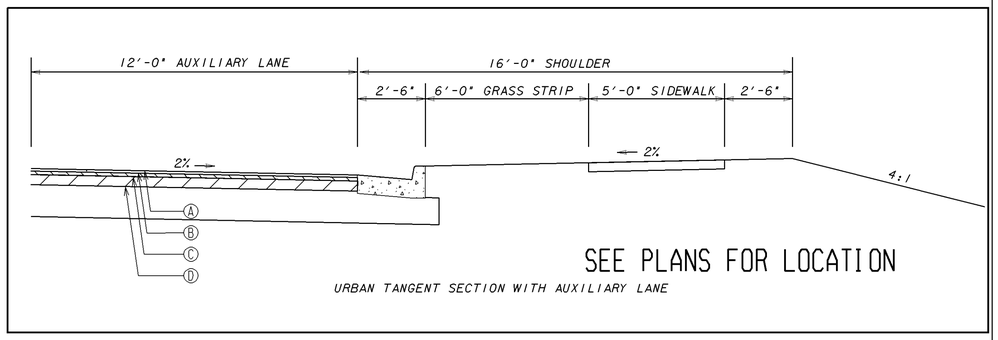

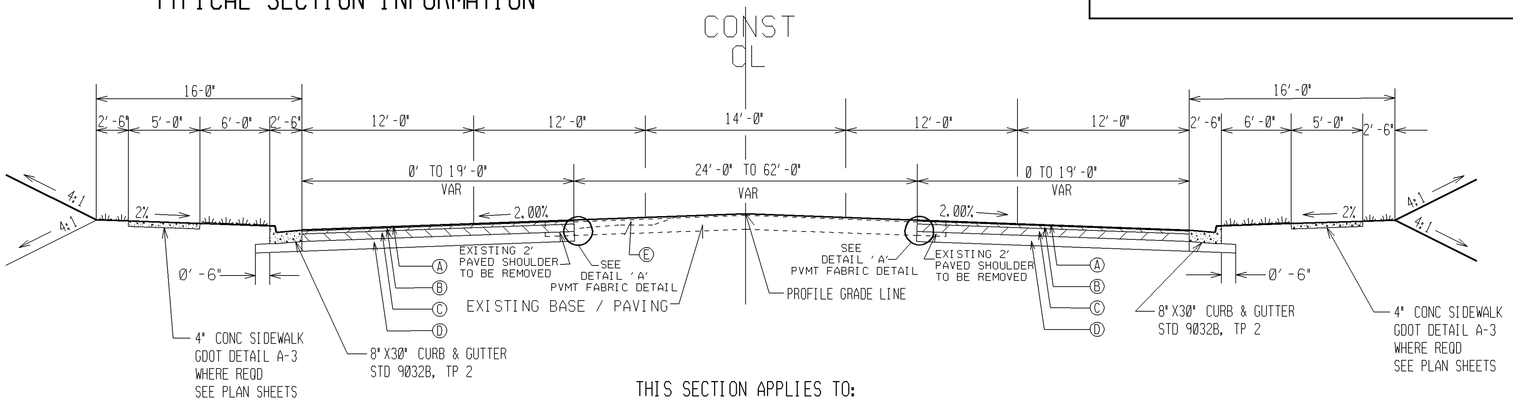

THIS SECTION APPLIES TO:
STA 281+65.87 TO 301+40.68

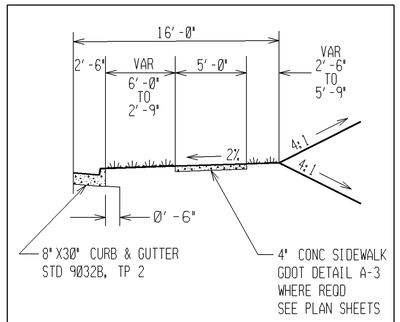

THIS SECTION APPLIES TO:
STA 301+19.34 TO 301+40.68 RT

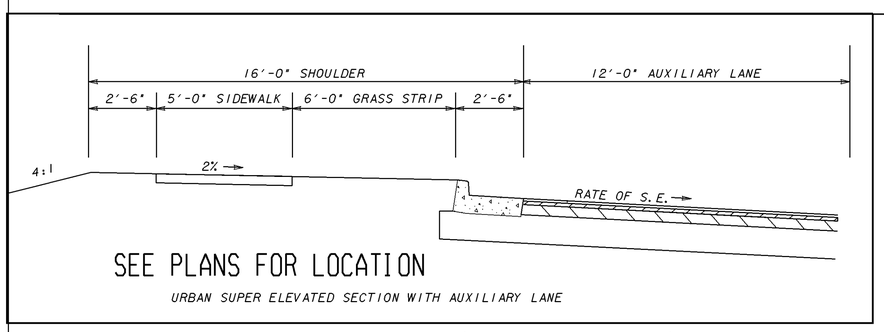

TYPICAL SECTION # 4 - URBAN MAINLINE TANGENT SECTION

A	135 LBS/SQ. YD. REC. ASPH. CONC. 9.5MM, SUPERPAVE, TYPE II, GP 2 ONLY, INCL. BITUM. MATERIAL & H. LIME
B	220 LBS/SQ. YD. REC. ASPH. CONC. 19MM, SUPERPAVE, GP 1 OR 2, INCL. BITUM. MATERIAL & H. LIME
C	440 LBS/SQ. YD. REC. ASPH. CONC. 25MM, SUPERPAVE, GP 1 OR 2 INCL. BITUM. MATERIAL & H. LIME
D	12" GRADED AGGREGATE BASE
E	RECYCLED ASPH. LEVELING, INCLUDING BITUM MATERIAL & H LIME AS REQD
F	8" GRADED AGGREGATE BASE
G	6" GRADED AGGREGATE BASE
H	4" AGGREGATE SURFACE COURSE NOT BLENDED IN
J	PAVEMENT EDGE TREATMENT(SEE DETAIL P-7)

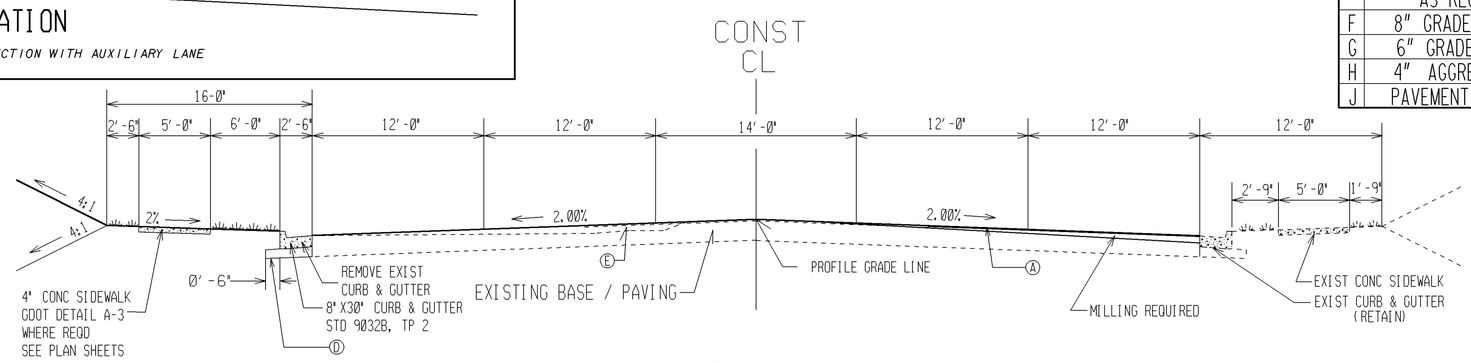

THIS SECTION APPLIES TO:
STA 301+40.68 TO 308+70.00

SLOPE CONTROLS		
SLOPE	CUT	FILL
4:1	0-6'	0-10'
2:1	OVER 6'	OVER 10'

7/30/2014
Q:\Emanuel\222630 Emanuel Co\Microstation\222630_05-001.dgn

STATE OF GEORGIA
DEPARTMENT OF TRANSPORTATION
OFFICE OF *TENNILLE* DESIGN

TYPICAL SECTIONS

DRAWING No. 05-002

7/30/2014 12:59:15 PM \\GDOT-DSN1\GOPLOT\QCF\d2_PDF_Out_mono_200dpi.qcf fgrimes Q:\Emanuel\222630 Emanuel Co\Microstation\222630_05-002.prf D2-Tennille