3/4/2015 ttootle	Wed Mar 04 10:53:20 2015	C:\TWP\000\Gdot-2012.TBL	C:___PW Work\0002861 Supplemental FFPR\002861TY01_trt.dgn	STATE	PROJECT NUMBER	SHEET NO.	TOTAL SHEETS
				GA	NHS00-0002-00(861)		

TYPICAL SECTION 9

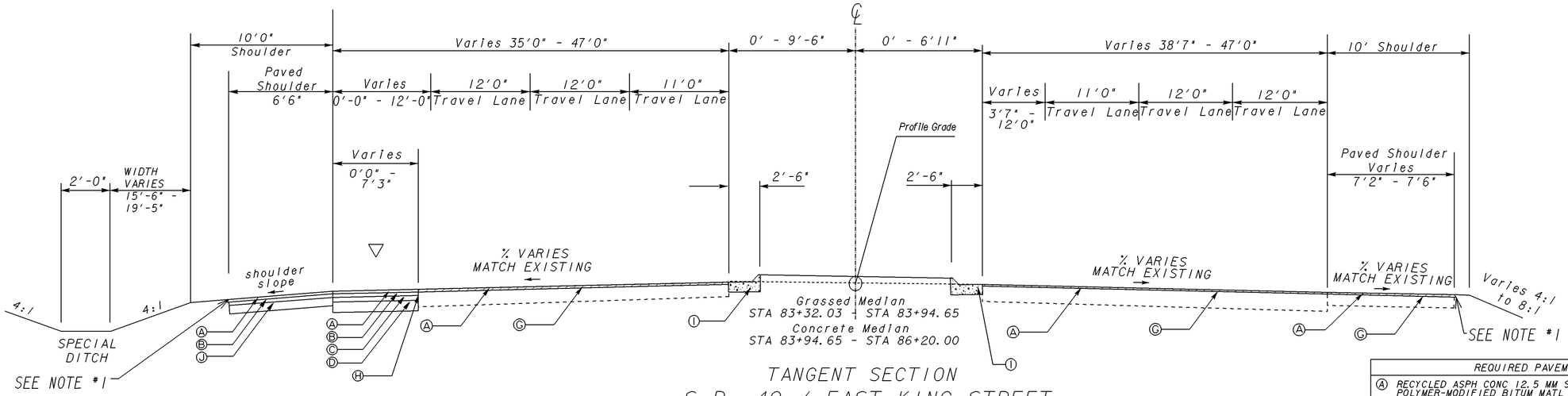

TANGENT SECTION
S.R. 40 / EAST KING STREET
STA 83+32.03 TO STA 86+20.00

THE EXISTING PAVED SHOULDER SHALL BE RETAINED FROM STA 84+89.70 TO STA 86+20.00

NOTE #1: REFER TO DETAIL P-7 FOR PLACEMENT OF ASPHALT EDGE TREATMENT ON ALL EDGE OF TRAVEL LANES/PAVED SHOULDERS

REQUIRED PAVEMENT
Ⓐ RECYCLED ASPH CONC 12.5 MM SP, GP 2 ONLY, INCL POLYMER-MODIFIED BITUM MATL & H LIME - (165 LB/SY)
Ⓑ RECYCLED ASPH CONC 19 MM SP, GP 1 OR 2, INCL BITUM MATL & H LIME - (220 LB/SY)
Ⓒ RECYCLED ASPH CONC 25 MM SP, GP 1 OR 2, INCL BITUM MATL & H LIME - (330 LB/SY)
Ⓓ GR AGGR BASE CRS, 10 INCH, INCL MATL
Ⓔ RECYCLED ASPH CONC LEVELING, INCL BITUM MATL & H LIME
Ⓕ CONCRETE CURB & GUTTER, 8 IN X 30 IN, TP 2
Ⓖ MILL ASPH CONC PVMT, VARIABLE DEPTH
Ⓗ PAVEMENT REINFORCEMENT FABRIC, 18 IN WIDTH
Ⓘ CONCRETE CURB & GUTTER, 8 IN X 30 IN, TP 7
Ⓙ GR AGGR BASE CRS, 6 INCH, INCL MATL
▽ PAY LIMITS FOR GRADED AGGREGATE BASE

TYPICAL SECTION 10

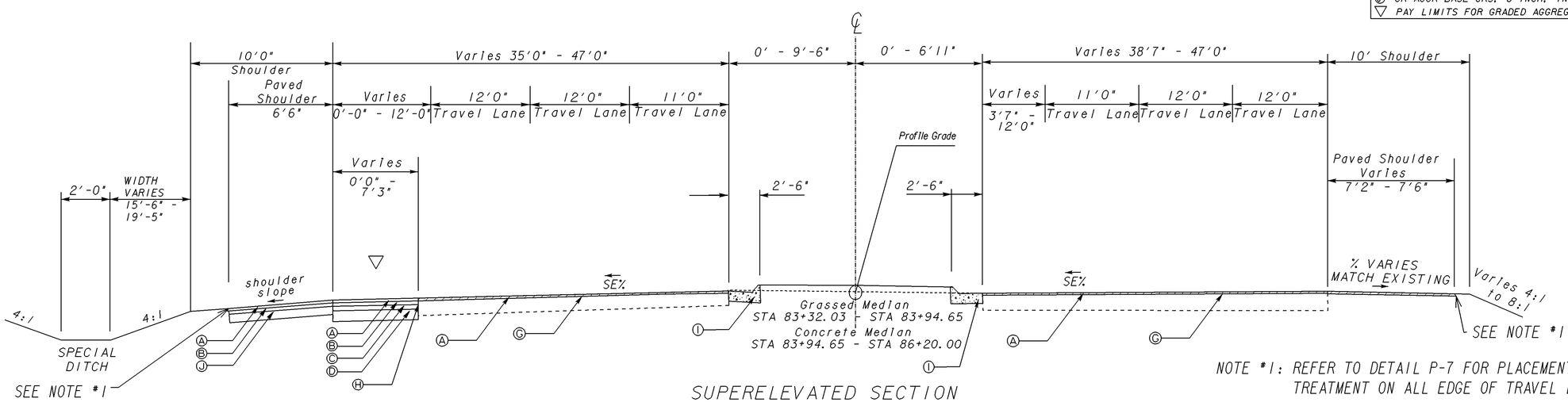

NOTE #1: REFER TO DETAIL P-7 FOR PLACEMENT OF ASPHALT EDGE TREATMENT ON ALL EDGE OF TRAVEL LANES/PAVED SHOULDERS

THE EXISTING PAVED SHOULDER SHALL BE RETAINED FROM STA 84+89.70 TO STA 86+20.00

SUPERELEVATED SECTION
S.R. 40 / EAST KING STREET

SLOPE △ : SEE ROADWAY PLANS FOR SUPERELEVATION RATES AND TRANSITIONS

GEORGIA
DEPARTMENT OF TRANSPORTATION

NOT TO SCALE

REVISION DATES

STATE OF GEORGIA
DEPARTMENT OF TRANSPORTATION
OFFICE: DISTRICT 5 ROAD DESIGN
TYPICAL SECTIONS
S.R. 40 / EAST KING ST.
CAMDEN COUNTY

DRAWING No. 05-005

3/1/2007 GPLN