STATE	COUNTY	PROJECT NUMBER	SHEET NO.	TOTAL SHEETS
GA.				

TYPICAL DETAIL "A"

TYPICAL POWER SEPARATION AT POLE

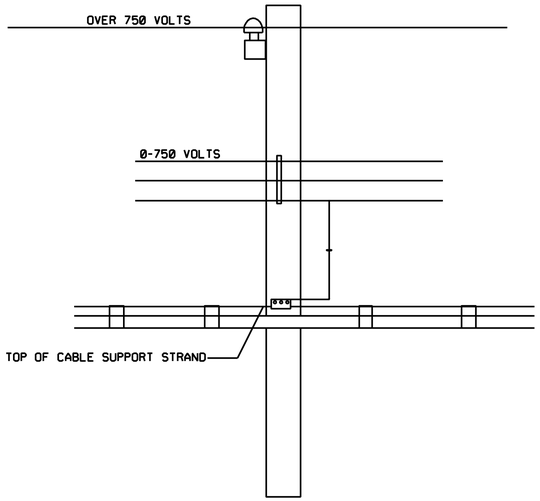

TYPICAL DETAIL "B"

SEPARATION REQUIREMENTS FOR MID-SPAN AND AT CROSSINGS

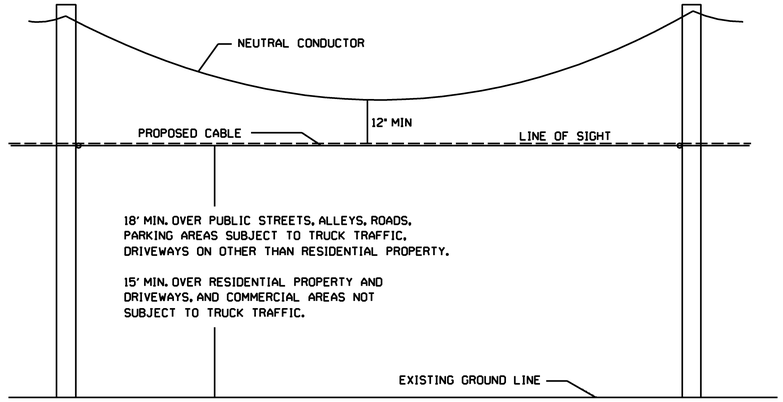

THE VERTICAL SEPARATION FROM NEUTRAL CONDUCTORS SHALL BE INCREASED SO THAT THE LOWEST POINT OF THE NEUTRAL CONDUCTOR (IN THE SPAN OR AT THE CROSSING) WILL BE AT LEAST 12 INCHES ABOVE THE COMMUNICATION CABLE ATTACHMENT LEVEL (LINE OF SIGHT) AS ILLUSTRATED ABOVE.

TYPICAL DETAIL "C"

STREET LIGHT BRACKET SEPARATION
NOTE: SEE TABLE BELOW

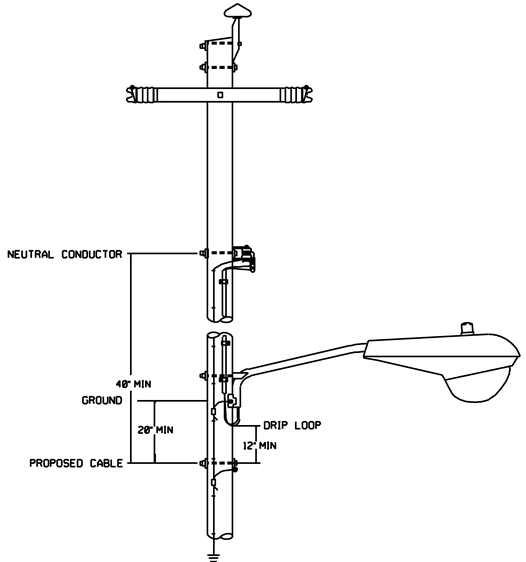

VERTICAL CLEARANCES AT THE POLE FOR SPAN WIRES AND BRACKETS FOR STREET LIGHTS (RULE 238C)

TYPE OF CLEARANCE	CLEARANCE (IN.)			
	IF EFFECTIVELY GROUNDED	IF NOT EFFECTIVELY GROUNDED		
		FOR LUMINAIRES		FOR TROLLEY CONDUCTORS
		UP TO 150V	OVER 150V	
ABOVE COMMUNICATION CROSS ARMS	20 (A)	20 (A)	20 (A)	20 (A)
BELOW COMMUNICATION CROSS ARMS	24	24	40	24
ABOVE COMMUNICATION CABLES	4	20 (A)	20 (A)	12
BELOW COMMUNICATION CABLES	4	20	40	12
FROM COMMUNICATION TERMINAL BOXES	4	20 (A)	20 (A)	12 (B)
FROM COMMUNICATION BRACKETS BRIDLE WIRE RINGS, AND DRIVE HOOKS	4	16 (A)	16 (A)	4

NOTES A. MAY BE REDUCED TO 12 IN. FOR WIRES OR PARTS OF BRACKETS 40 IN. OR MORE FROM SURFACE OF POLE
B. IF OBTAINABLE IF NOT, MAXIMUM OBTAINABLE

TYPICAL DETAIL "D"

TYPICAL TRANSFORMER AND POWER RISER SEPARATION WITHOUT GUARD ARM

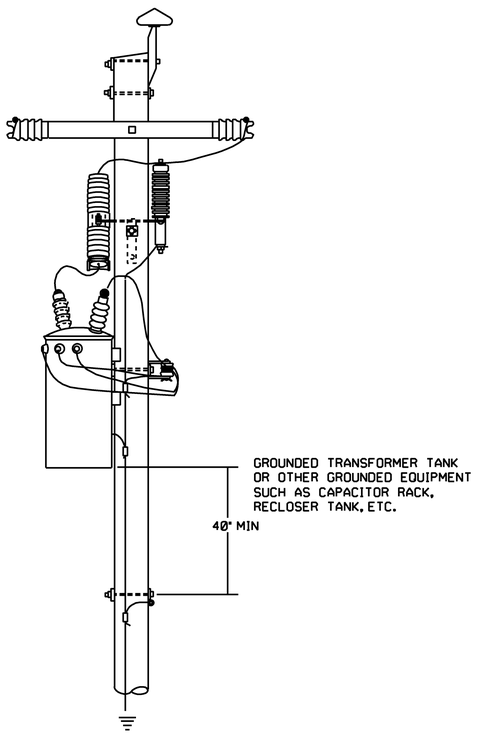

TYPICAL DETAIL "E"

TYPICAL DISCONNECT BOX INSTALLATION

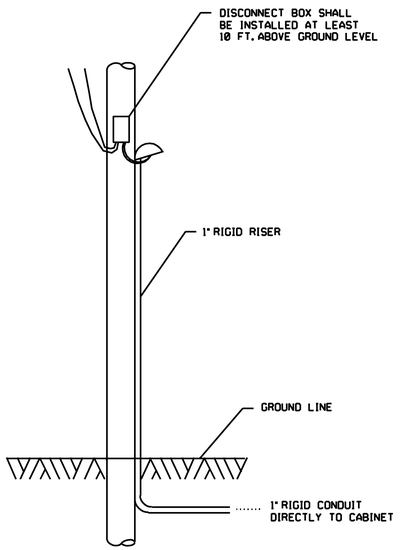

Guidelines For Usage On Metric Projects

When these details are incorporated into plans and or projects that are being prepared or constructed in metric units, exact or precise conversion to metric units is not required. The dimensions shown that are in feet and inches may be converted to corresponding metric units using the following "Rounded-Off" conversion factors: 1" =25mm, 4"=100mm, and 12" or 1' =300mm. All measurement notes that refer to linear feet and square yards shall be interpreted to mean linear meters and square meters.

DATE	DEPARTMENT OF TRANSPORTATION STATE OF GEORGIA
REVISION DESCRIPTION	TRAFFIC SIGNAL DETAIL *UTILITY CLEARANCE DETAIL*
REV. BY:	*APRIL 2010* NOT TO SCALE - REPORT ERRORS
	DETAIL NUMBER TS-08