STATE	PROJECT NUMBER	SHEET NO.	TOTAL SHEETS
GA.			

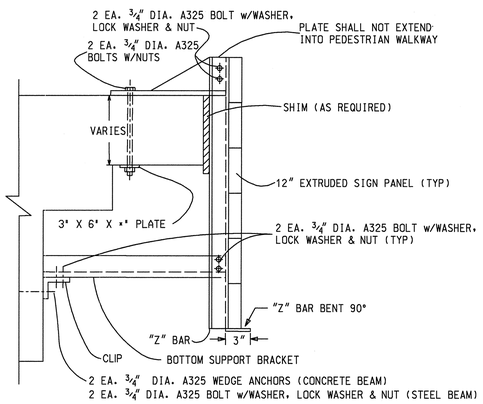

DECK OVERHANG ATTACHMENT DETAIL

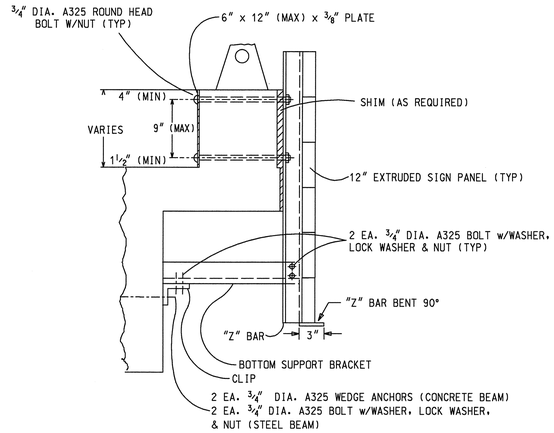

PARAPET ATTACHMENT DETAIL

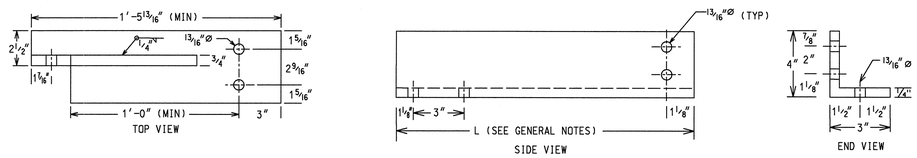

BOTTOM SUPPORT BRACKET DETAIL

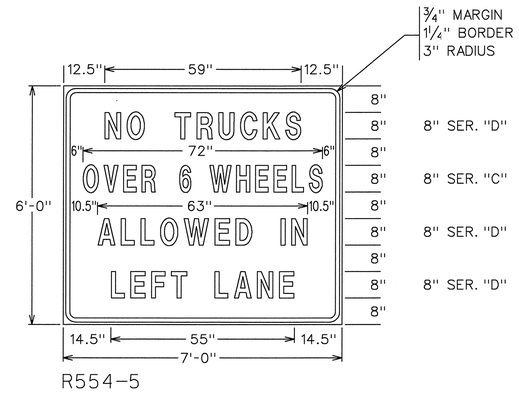

R554-5

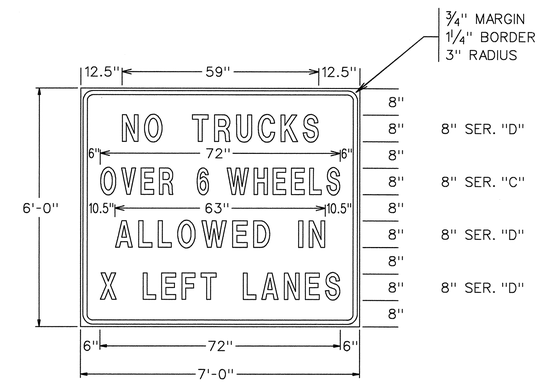

SIGN CODE	X
R554-6	2
R554-7	3
R554-8	4
R554-9	5

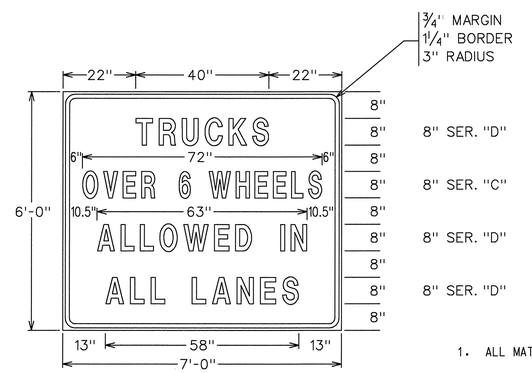

R554-10

GENERAL NOTES

1. ALL MATERIALS SHALL BE A709 GRADE 36 GALVANIZED STEEL UNLESS SPECIFIED OTHERWISE.
2. ALL CONNECTIONS SHALL BE MADE WITH SELF LOCKING NUTS OR SPOT WELDED. THE THREADED PORTION OF BOLTS SHALL EXTEND A MINIMUM OF 1/2 INCH BEYOND NUT.
3. THE R554-5 SIGN SHALL BE USED ON ROADWAYS WITH 3 LANES OF TRAVEL IN ONE DIRECTION. THE R554-6, 7, OR 8 SIGNS SHALL BE USED ON ROADWAYS OF 4, 5, OR 6 LANES, RESPECTIVELY, OF TRAVEL IN ONE DIRECTION.
4. WHEN USED, SHIMS SHALL BE ATTACHED TO THE "Z" BARS SUPPORTING THE SIGN. ON BRIDGES WITH A DECK OVERHANG, THE LENGTH OF THE MOUNTING PLATE SHALL BE INCREASED IN PROPORTION TO THE NUMBER OF SHIMS USED. ON BRIDGES WITH A PAPAPET, THE LENGTH OF THE BOLTS SHALL BE INCREASED IN PROPORTION TO THE NUMBER OF SHIMS USED.
5. ON BRIDGES WITH A SLOPE OTHER THAN ZERO, SHIMS SHALL BE USED TO ADJUST THE SIGN SO THAT THE BOTTOM OF THE SIGN IS LEVEL. WHEN USED, SHIMS SHALL BE ATTACHED TO THE BOTTOM OF THE MOUNTING PLATE.

   ON BRIDGES WITH A DECK OVERHANG, THE LENGTHS OF THE BOLTS SHALL BE INCREASED IN PROPORTION TO THE NUMBER OF SHIMS USED. ON BRIDGES WITH A PARAPET, THE HOLES FOR BOLTS SHALL BE DRILLED SO THAT THE SIGN IS LEVEL.
6. THE BOTTOM OF THE SIGN SHALL NOT EXTEND BELOW THE BOTTOM OF THE BRIDGE BEAM.
7. FOR DETAILS OF ALUMINUM EXTRUDED SIGN PANELS, POST CLIPS, AND BOLTS, SEE THE CURRENT VERSION OF GEORGIA STANDARD 9042.
8. THE LENGTH (L) OF THE BOTTOM SUPPORT BRACKET DEPENDS UPON THE BRIDGE BEAM SETBACK, AND SHALL BE DETERMINED IN THE FIELD.

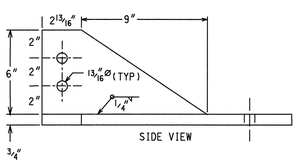

MOUNTING PLATE DETAIL

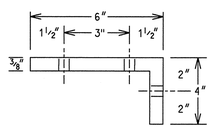

END VIEW

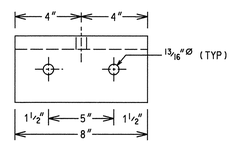

BACK VIEW

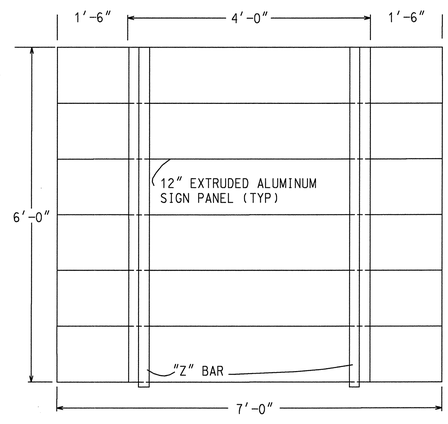

SIGN ASSEMBLY DETAIL
(BACK VIEW)

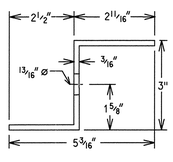

"Z" BAR DETAIL

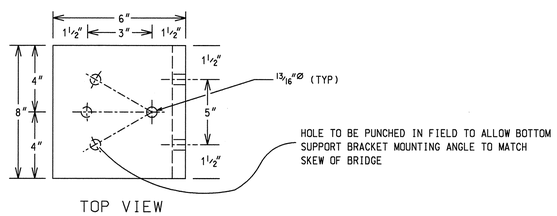

TOP VIEW

CLIP DETAIL

DATE	REVISIONS
9/11/01	REV DETAILS FOR R554 SERIES; ADDED DETAIL FOR R554-10

GEORGIA DEPARTMENT OF TRANSPORTATION
OFFICE OF TRAFFIC SAFETY & DESIGN

DETAILS OF
BRIDGE ATTACHMENT

NO SCALE JANUARY 2000

PCBDTB

\10\brdge attachment.dgn Jul 03, 2003 16:10:14