STATE	PROJECT NUMBER	SHEET NO.	TOTAL SHEETS
GA.			

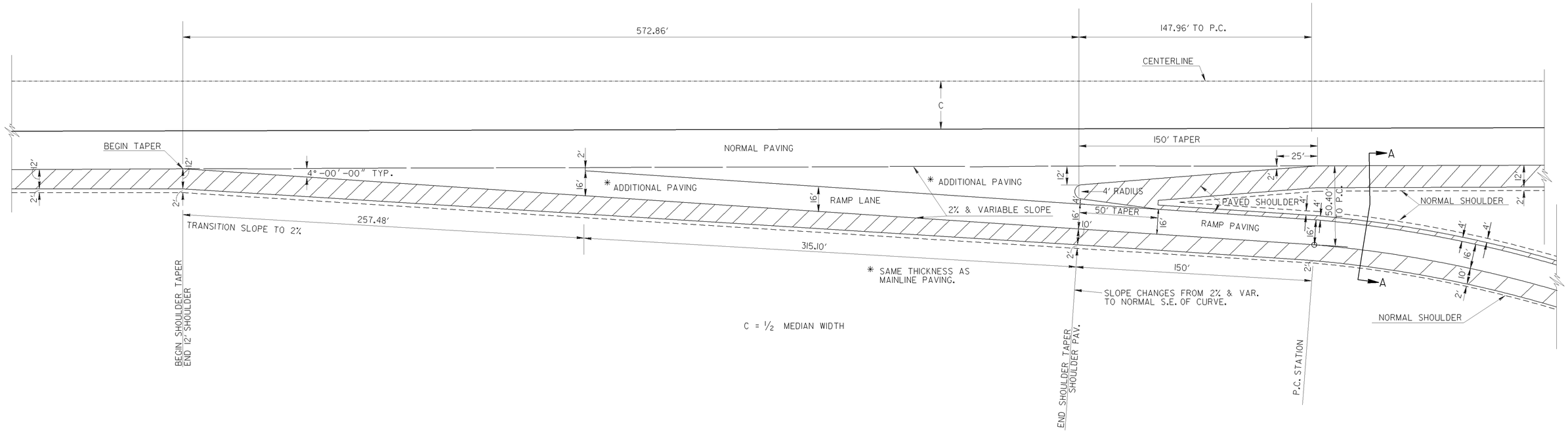

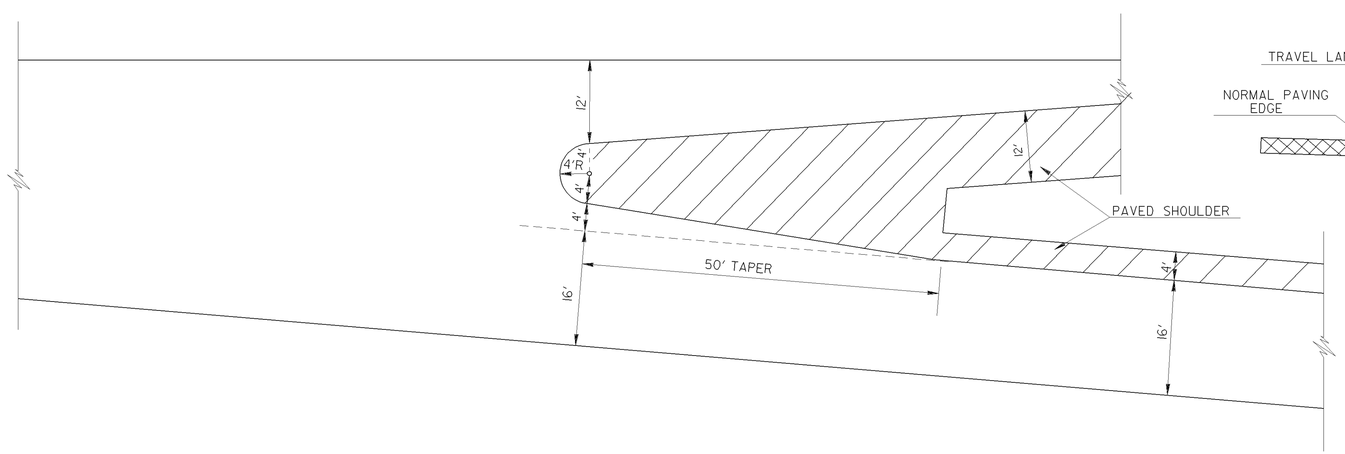

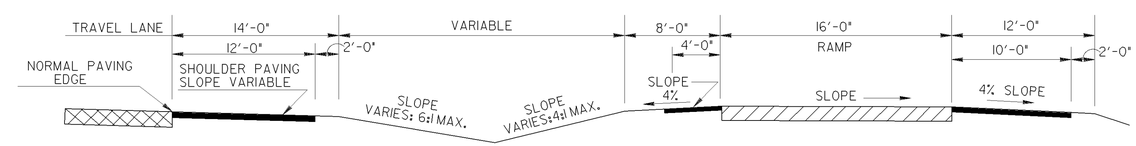

SECTION A-A

DATE	DEPARTMENT OF TRANSPORTATION STATE OF GEORGIA
REVISION	CONSTRUCTION DETAIL DETAIL OF EXIT RAMPS FOR INTERCHANGES NO SCALE — REDRAWN APRIL 2011
BY	NUMBER R-2