DATE$$$	TIME$$$	PRF	DGN	STATE	PROJECT NUMBER	SHEET NO.	TOTAL SHEETS
$USER$		$$PENTABLE$$		GA			

TYPE C CABINET POWER PANEL WIRING

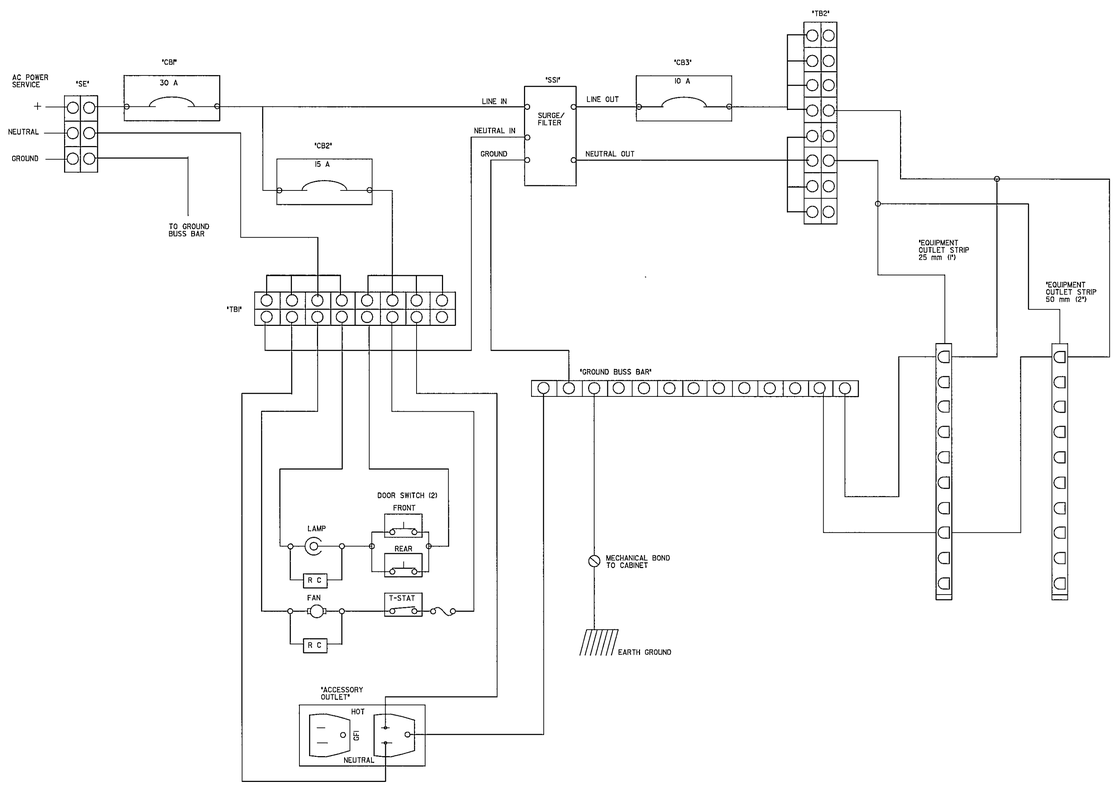

TYPE C CABINET ASSEMBLY DETAIL

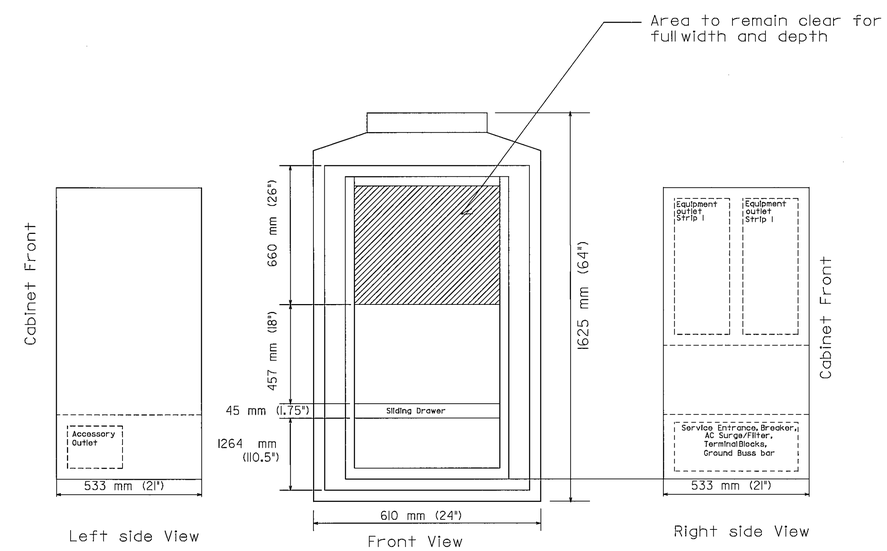

TYPE C CABINET POWER PANEL WIRING AND CABINET ASSEMBLY DETAIL

GEORGIA
DEPARTMENT OF TRANSPORTATION

- NO SCALE -

REVISION DATES		

STATE OF GEORGIA
DEPARTMENT OF TRANSPORTATION
OFFICE: TRAFFIC OPERATIONS
SIGNAL PLANS
TYPE C CABINET DETAILS
SHEET 1 OF 1
MAY 2008
ITS-14
DRAWING No. 28-

3/1/2007 GPLN