STATE	PROJECT NUMBER	SHEET NO.	TOTAL SHEETS
GA.			

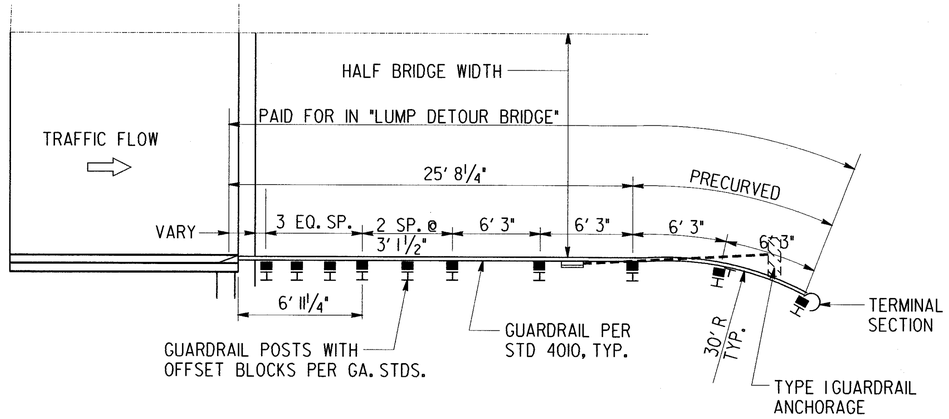

PLAN VIEW

ALTERNATE-TRAILING END ONLY

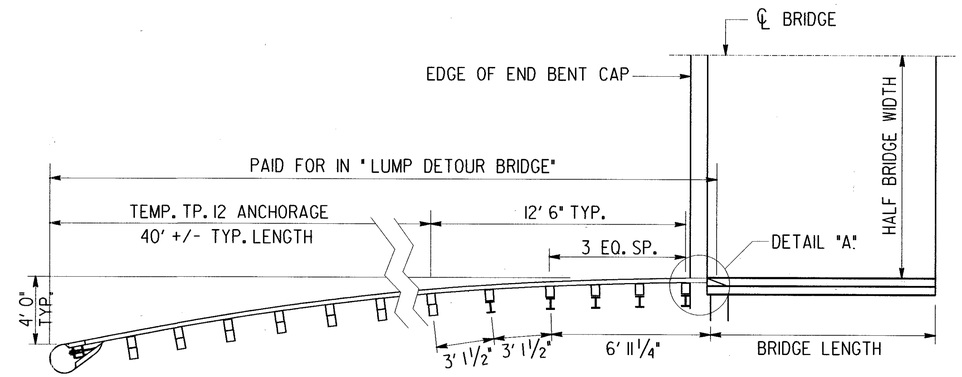

PLAN VIEW

GENERAL NOTES:

1. SEE SECTION 541 FOR DETOUR BRIDGES SPECIFICATIONS.
2. SEE STANDARD 4010 FOR DETAILS OF SPECIAL END SHOE, 1/2" GALV. STEEL PLATE, AND ALL BOLTS, NUTS AND WASHERS REQUIRED FOR CONNECTIONS PER DETAIL "A".
3. a) TEMPORARY TYPE 12 ANCHORAGES SHALL BE THE FLARED TYPE UNLESS OTHERWISE APPROVED BY THE ENGINEER. TYPE 12 ANCHORAGES SHALL BE IN ACCORDANCE WITH SUB-SECTION 641.03E.

   b) ALL OTHER GUARDRAIL COMPONENTS SHALL BE ACCORDING TO CURRENT GA. STANDARD DETAILS.

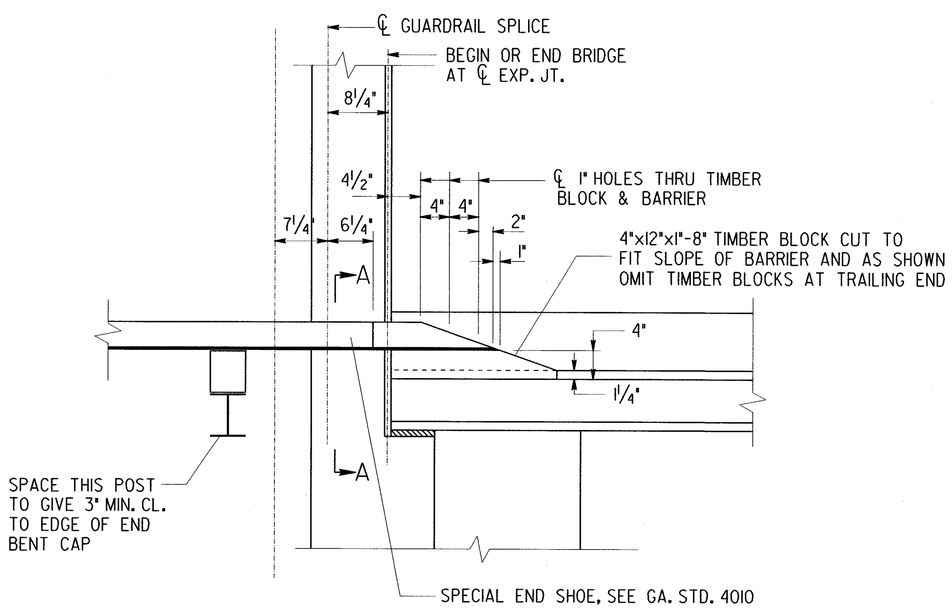

DETAIL "A"

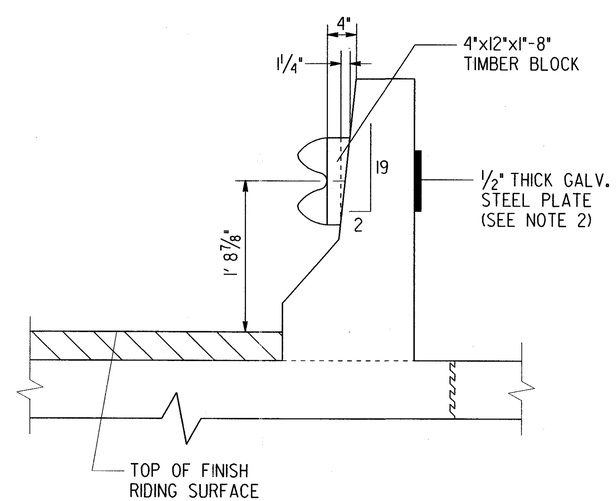

SECTION A-A

DATE	DEPARTMENT OF TRANSPORTATION STATE OF GEORGIA	
REVISION	CONSTRUCTION DETAIL GUARDRAIL AT DETOUR BRIDGE ENDS SEE SECTION 541	
	NO SCALE	AUGUST 2001
BY	DESIGNED TRACED CHECKED REVISED	NUMBER G-13