STATE	PROJECT NUMBER	SHEET NO.	TOTAL SHEETS
GA.			

TYPE 1

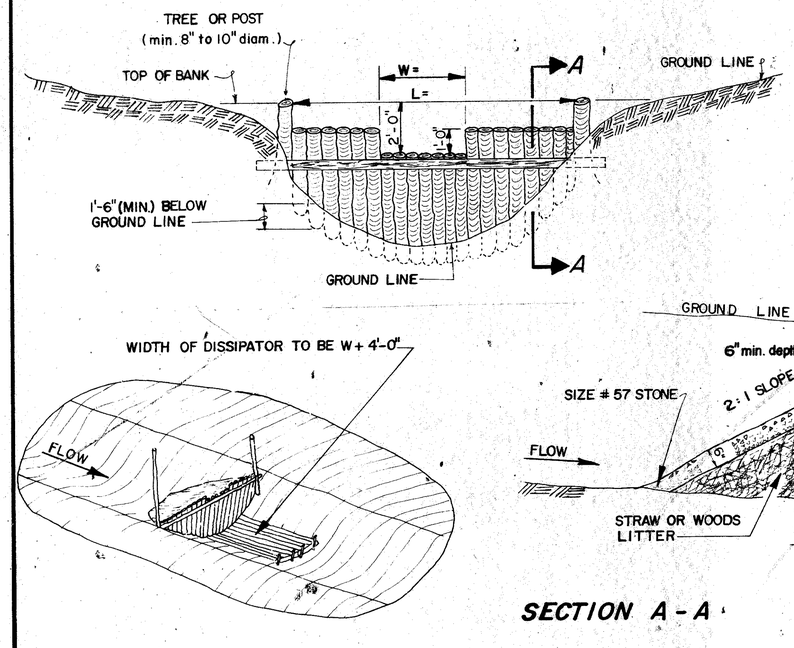

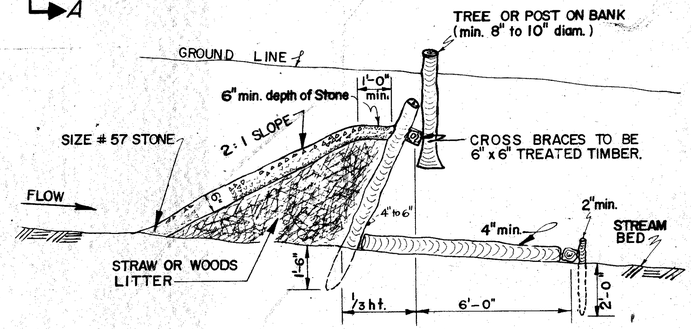

SECTION A - A

TYPE 2

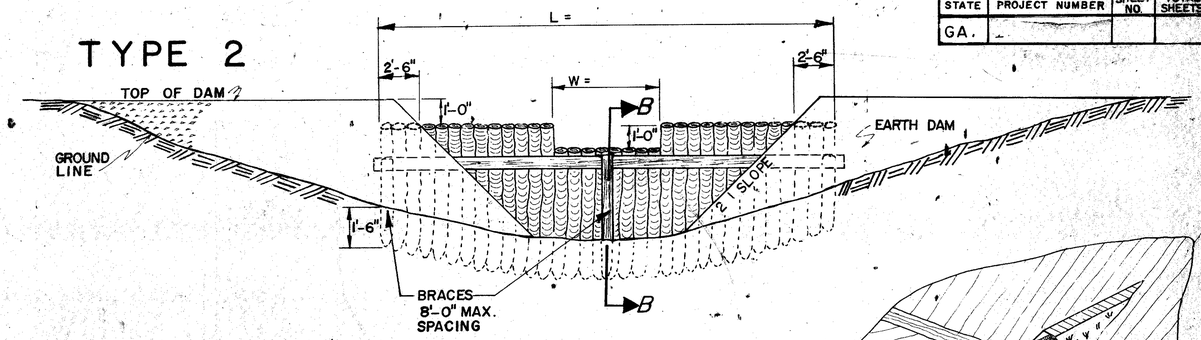

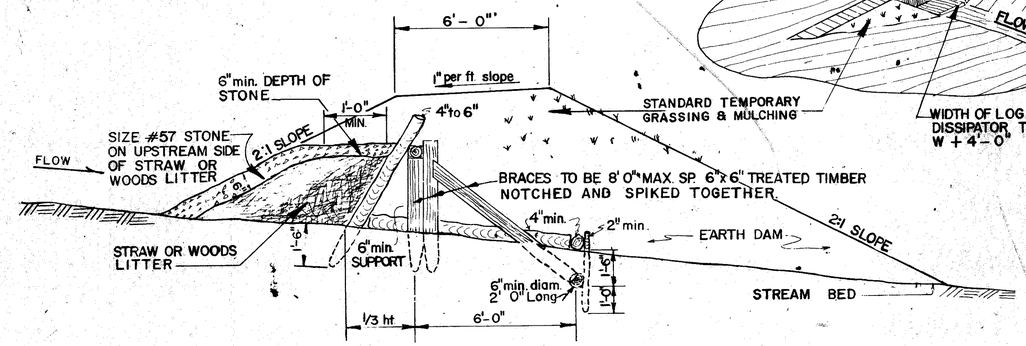

SECTION B - B

USES:
THESE ITEMS ARE USED ON EASEMENTS AND IN RURAL WOODED AREAS. THE PURPOSE OF THE CHECK DAM IS TO REDUCE FLOW VELOCITY. LOWER VELOCITIES REDUCE EROSION POTENTIAL AND ALLOW SOME SUSPENDED SEDIMENT TO DEPOSIT. THEY ARE USED DOWNSTREAM OF DRAINAGE STRUCTURES BUT SHOULD NOT BE USED IN FLOWING STREAMS. CHECK DAMS ARE USUALLY CONSTRUCTED OF ALL NATURAL MATERIALS FROM THE AREA AND LEFT IN PLACE. THIS ITEM MAY BE USED ON THE R.O.W. BUT HAS BEEN LARGELY REPLACED BY DITCH CHECKS OF SILT FENCE OR HAY BALES OR RIPRAP. IT MAY BE USED IN AREAS WHERE BACKUP IS NEEDED TO PROTECT TROUT STREAMS OR LAKES FROM SILTATION PRODUCED BY MAJOR FLOOD EVENTS. THIS ITEM IS USED ON FOREST SERVICE LANDS.

BY	REVISIONS	DATE
JMW	Added "Uses" Guide	5-14-93
JLP	Checked	3-1-71
JLP	Braces	12-7-72
R.M.U.	Slope Cover Reqr'm't	4-29-75

CONSTRUCTION DETAIL
EROSION CONTROL CHECK DAMS

AUGUST, 1969

DESIGNED JMW
DRAWN JMW
TRACED JMW
CHECKED JLP

SUBMITTED
APPROVED

D-25

PLAN

PROFILE

K+E PLATE 1, PLAN-PROFILE KEUFFEL & ESSER CO.