GDOT Georgia Department of Transportation

P. I. No. XXXXXXX

NOTE: LONGITUDINAL REINFORCEMENT FOR DROP TAPERED INLET SECTION SHALL BE TAPERED AND LAPPED 2'-0" MIN. WITH LONGITUDINAL BARS FROM NORMAL BOX CULVERT. FIELD CUT LONGITUDINAL BARS AS NECESSARY TO PROVIDE 2-1/4" MIN. CL. BETWEEN ADJACENT BARS.

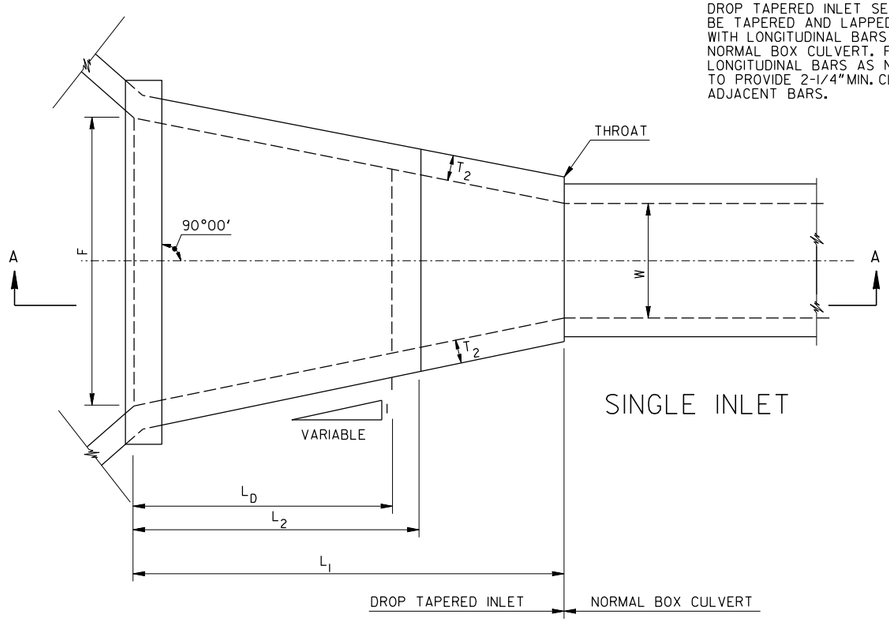


SINGLE INLET

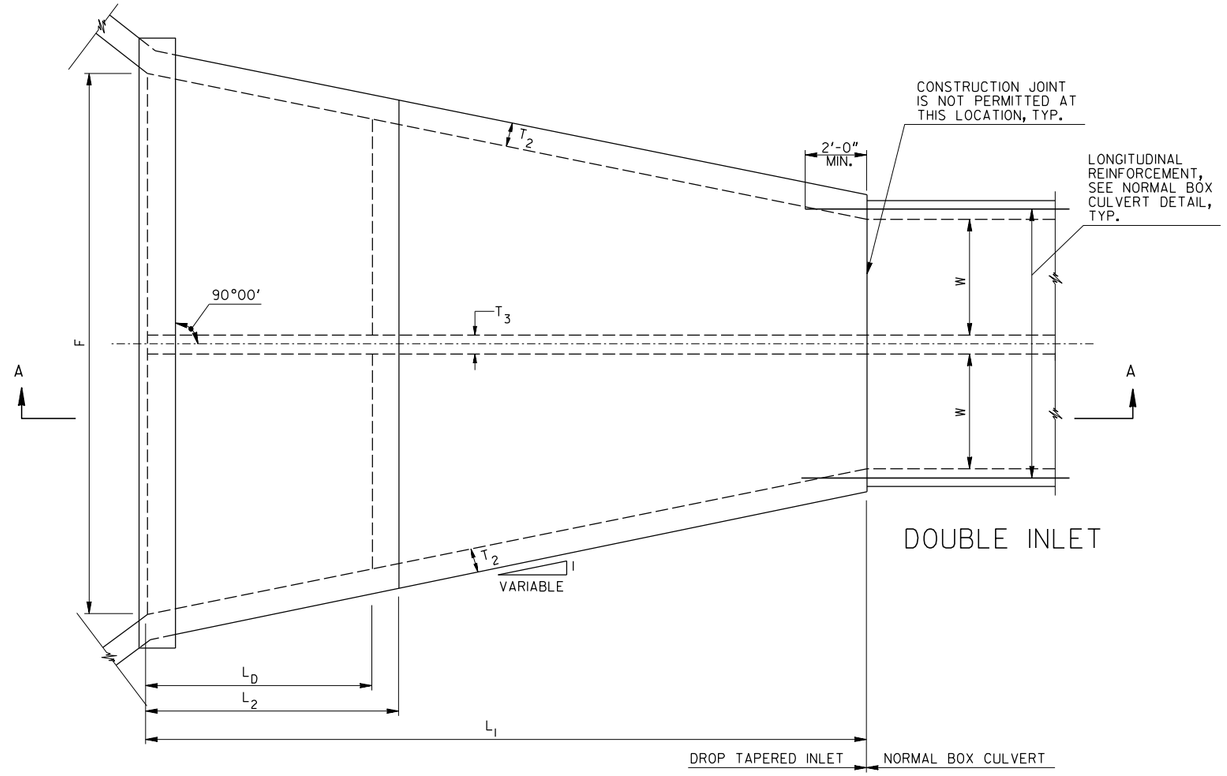


DOUBLE INLET

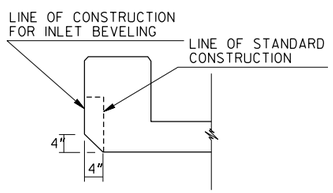


DETAIL FOR INLET BEVELING

| STA. | NORMAL BOX CULVERT | ℄ SKEW | W | F | $L_1$ | $L_2$ | $L_D$ | H | $H_F$ | S | D | $T_1$ | $T_2$ | $T_3$ | GRADE | ELEV. "A" | ELEV. "B" | ELEV. "C" | SEE STD. BELOW FOR CONC. & STEEL DETAILS | |
|---|---|---|---|---|---|---|---|---|---|---|---|---|---|---|---|---|---|---|---|---|
| | | | FT. | FT.&IN. | FT.&IN. | FT.&IN. | FT.&IN. | FT. | FT.&IN. | FT.&IN. | FT.&IN. | IN. | IN. | IN. | % | FT. | FT. | FT. | SIZE | STD. NO. |
| | | | | | | | | | | | | | | | | | | | | |
| | | | | | | | | | | | | | | | | | | | | |
| | | | | | | | | | | | | | | | | | | | | |
| | | | | | | | | | | | | | | | | | | | | |
| | | | | | | | | | | | | | | | | | | | | |
| | | | | | | | | | | | | | | | | | | | | |
| | | | | | | | | | | | | | | | | | | | | |
| | | | | | | | | | | | | | | | | | | | | |
| | | | | | | | | | | | | | | | | | | | | |
| | | | | | | | | | | | | | | | | | | | | |
| | | | | | | | | | | | | | | | | | | | | |
| | | | | | | | | | | | | | | | | | | | | |

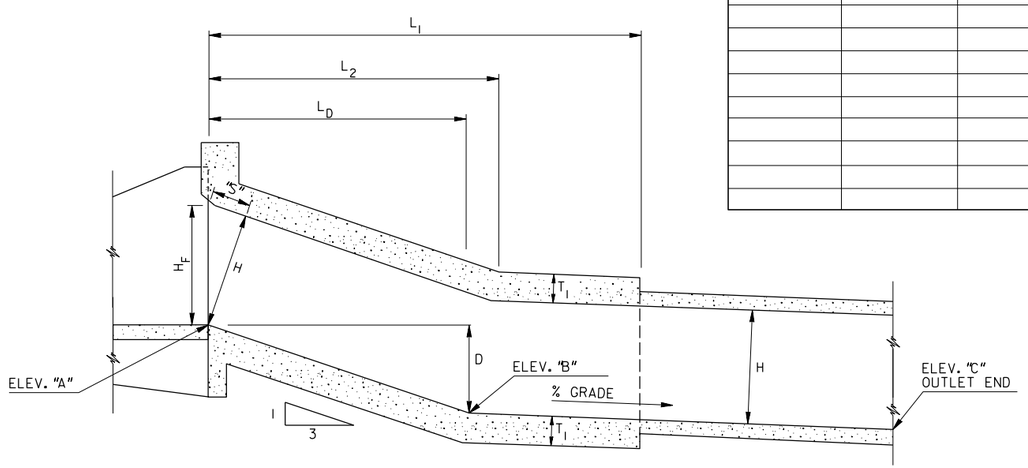


SECTION A-A SINGLE & DOUBLE INLET

## GENERAL NOTES

1. TRANSVERSE CONSTRUCTION JOINTS BETWEEN BARREL SECTIONS WILL NOT BE USED IN THE TAPERED INLET OR THE FIRST 15' OF THE NORMAL BOX CULVERT.

2. THIS STRUCTURE MUST BE CONSTRUCTED TO THE LINES AND GRADES SHOWN ON THE PLANS IN ORDER TO ENSURE ITS PROPER HYDRAULIC FUNCTION.

   IF FIELD CONDITIONS ARE ENCOUNTERED ON CONSTRUCTION WHICH ARE NOT COMPATIBLE TO THIS DESIGN, THE ROAD DESIGN DIVISION HYDRAULIC SECTION SHOULD BE CONSULTED BEFORE MODIFICATIONS ARE MADE.

3. THICKNESS OF CONCRETE FOR T1, T2, T3, AND THE SIZE AND SPACING OF STEEL IN TAPERED INLET WILL BE THE SAME AS THE STD. LISTED. WINGWALLS AT INLET END SHALL BE FOR 90° SKEW.

| BY | REVISION | DATE |
|---|---|---|
| G.M.E. | GEN. REVISION | 6-7-77 |
| | ADD "L2" DIMEN. | 8-15-76 |
| J.M.M. | INLET BEVELING DET. | 3-27-74 |

DEPARTMENT OF TRANSPORTATION
STATE OF GEORGIA

CONSTRUCTION DETAIL

DROP-TAPERED INLETS

NOT TO SCALE

NUMBER D-14