FED. ROAD DIV. NO.	STATE	FED. AID PROJ. NO.	STATE AID PROJ. NO.	FISAL YEAR	SHEET NO.	TOTAL SHEETS
3	GA.					

△ FOR DIMENSION Y SEE BRIDGE PLANS.

△ NOTE: POSTS SHALL BE PLUMB AND RAILS SHALL BE ON GRADE. RAILS SHALL BE IN PLACE BEFORE END POSTS ARE POURED.

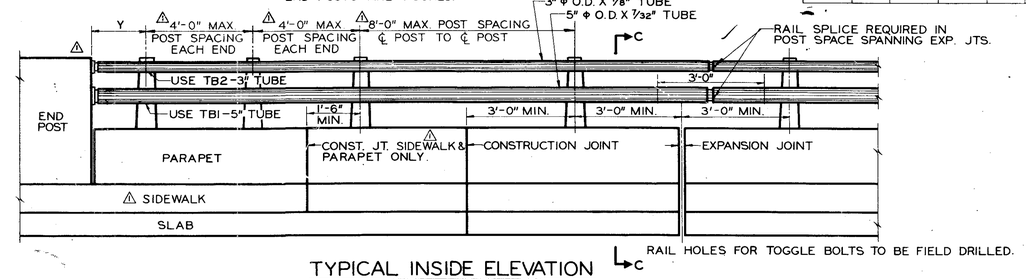

TYPICAL INSIDE ELEVATION

NO SCALE

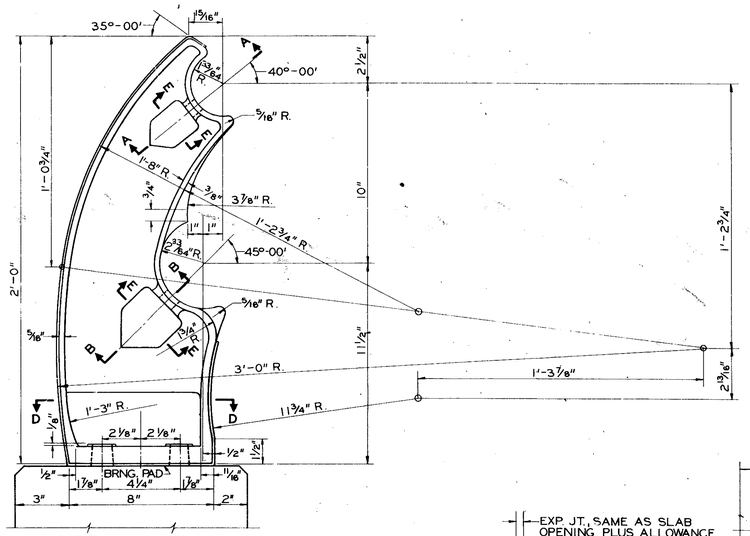

SIDE ELEVATION

SCALE: 3" = 1'-0"

NOTE: RADII = 1/8" UNLESS OTHERWISE SHOWN.
FILLETS = 1/4" UNLESS OTHERWISE SHOWN.
ALL DRAFTS TO BE 3° UNLESS OTHERWISE SHOWN.

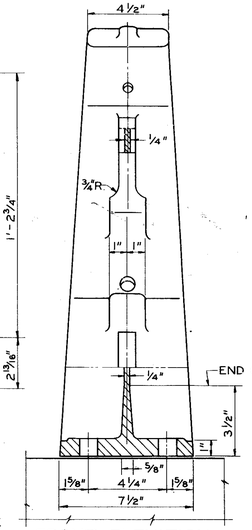

FRONT ELEVATION

SCALE: 3" = 1'-0"

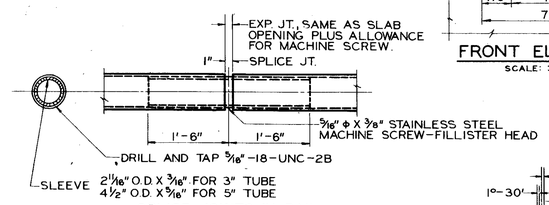

SPLICE JOINTS IN RAIL

NO SCALE

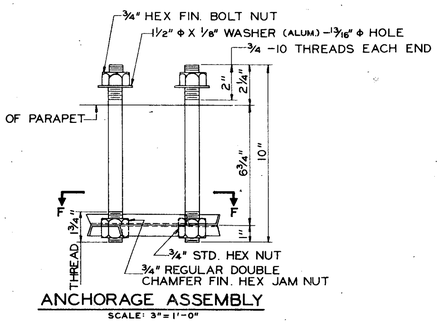

ANCHORAGE ASSEMBLY

SCALE: 3" = 1'-0"

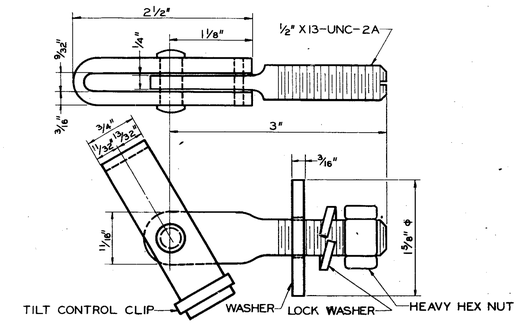

TOGGLE BOLT ASSEMBLY-TB1

TRAFFIC RAIL

FULL SIZE

MATERIAL FOR TOGGLE BOLT ASSEMBLY TB1 SHALL BE CARBON OR STAINLESS STEEL HAVING A MINIMUM ELONGATION OF 12%. ANY NON-STAINLESS COMPONENT TO BE EITHER GALVANIZED TO A.S.T.M.-A153 OR CADMIUM PLATED TO A.S.T.M.-A165, TYPE NS. REQUIRED MINIMUM TENSILE LOAD TO EQUAL 9000 LBS. WHEN IN OPEN POSITION AND TESTED THRU A 1" Φ HOLE. CONTRACTOR SHALL FURNISH THE ENGINEER WITH THE MANUFACTURERS CERTIFICATION OF COMPLIANCE WITH THE ABOVE REQUIREMENTS.

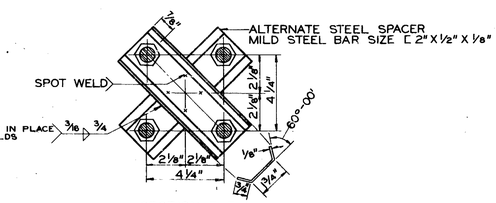

SECTION F-F

SCALE: 3" = 1'-0"

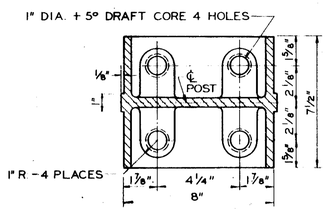

SECTION D-D

SCALE: 3" = 1'-0"

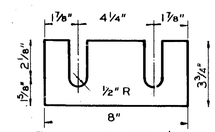

SHIMS TO BE MADE FROM 1/16" TO 1/8" MATERIAL. SHIMS SHALL NOT PROJECT OUTSIDE OF POST BASE

SHIM DETAIL

SCALE: 3" = 1'-0"

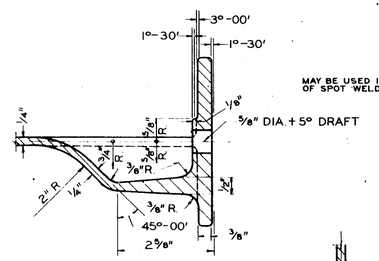

SECTION A-A

SCALE: 6" = 1'-0"

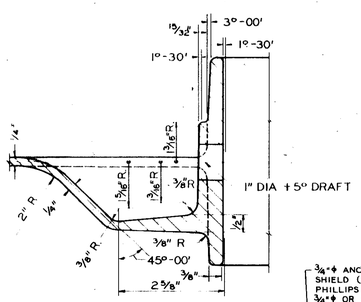

SECTION B-B

SCALE: 6" = 1'-0"

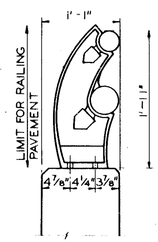

SECTION C-C

SCALE: 1" = 1'-0"

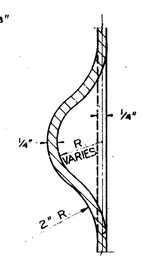

SECTION E-E

NO SCALE

GENERAL NOTES

SPECIFICATIONS - GEORGIA STANDARD.

RAILING SHALL CONFORM TO HORIZONTAL AND VERTICAL ALIGNMENT. FOR HANDRAIL ON A HORIZONTAL CURVE THE RAILING SHALL CONFORM TO THE CURVE. POST SHALL BE NORMAL TO THE TOP OF THE PARAPET.

COST OF ANCHORAGE ASSEMBLY, TOGGLE ASSEMBLY, MACHINE SCREW, BRNG. PADS, SPLICE SLEEVES, AND SHIMS SHALL BE INCLUDED IN PRICE BID FOR RAILING.

△ RAILS SHALL BE CONTINUOUS OVER A MINIMUM OF 3 POSTS.

OUTER SURFACE OF POST FLANGES, EXCEPT BASE AND RAIL MOUNTING FACES, SHALL HAVE A NO. 36 GRIT FINISH.

POSTS SHALL BE SEATED ON NEOPRENE BEARING PADS 1/16" MINIMUM THICKNESS, HAVING A NOMINAL DUROMETER HARDNESS OF 70. PADS SHALL CONFORM TO POST BASE DIMENSIONS.

ALUMINUM SHIMS MAY BE USED FOR ADJUSTING POST ALIGNMENT, MAXIMUM THICKNESS OF SHIM BUILD-UP NOT TO EXCEED 1/8". WHERE MORE TILTING OF THE POST IS REQUIRED, THE CONCRETE AREA SHALL BE GROUND DOWN.

POSTS SHALL BE CAST ALUMINUM. RAIL MEMBERS SHALL BE ALUMINUM EXTRUDED TUBE.

ANCHOR BOLTS TO BE SET NORMAL TO THE TOP OF THE PARAPET.

MATERIAL SPECIFICATIONS

ITEM	MATERIAL
POST	ALUMINUM ALLOY - A444 - T4
RAILING, SPLICE SLEEVE & END ATTACHMENT	A.S.T.M. B-221 ALLOY 6061-T6
MACHINE SCREW	STAINLESS STEEL - A.S.T.M. A276 TYPE 316 CONDITION A
SHIM	A.S.T.M. B-209 ALLOY 1100-0.
ANCHORAGE ASSEMBLY	ROD & NUT A.S.T.M. A-307-GALV. STEEL-GALV. A.S.T.M. A153 SPACER A.S.T.M. A-36 WASHER - A.S.T.M. B-209 ALCAD 2024 - T3
TOGGLE BOLT ASSEMBLY	FOR TB1 AND TB2 SEE DETAILS

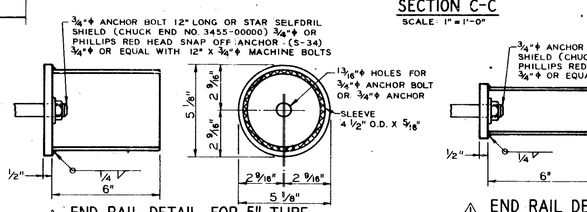

△ END RAIL DETAIL FOR 5" TUBE

NO SCALE

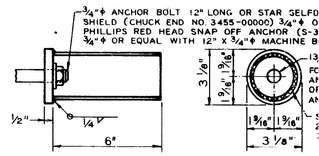

△ END RAIL DETAIL FOR 3" TUBE

NO SCALE

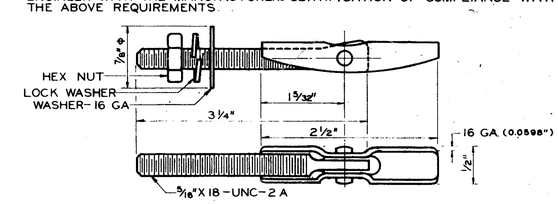

TOGGLE BOLT ASSEMBLY-TB2

PEDESTRIAN RAIL

FULL SIZE

MATERIAL FOR TOGGLE BOLT ASSEMBLY TB2 SHALL BE CARBON OR STAINLESS STEEL HAVING A MINIMUM ELONGATION OF 12%. ANY NON-STAINLESS STEEL COMPONENT SHALL BE CADMIUM PLATED TO ASTM A-165, TYPE NS. REQUIRED MINIMUM TENSILE LOAD TO EQUAL 1000 LBS. WHEN IN AN OPEN POSITION AND TESTED THRU A 3/8" Ø HOLE. CONTRACTOR SHALL FURNISH THE ENGINEER WITH THE MANUFACTURER'S CERTIFICATION OF COMPLIANCE WITH THE ABOVE REQUIREMENTS.

REV.	BY	REVISIONS	DATE
H.W.C.	G.C.L.	DELETE GALV ON SPACER	9-19-69
H.W.C.	G.C.L.	ADD ALTERNATE END CAP	10-22-85
		REVISED MATERIAL FOR TOGGLE BOLT ASSEMBLY TB2	3-29-72
		POST SP. & RAIL CONNECTION	11-1-74
		REV. MAT'L. SPEC.	

DEPARTMENT OF TRANSPORTATION
STATE OF GEORGIA

STANDARD TWO PIPE ALUMINUM HANDRAILING FOR MOUNTING ON BRIDGE PARAPETS

SCALE: AS NOTED

JULY 1968

DESIGNED G.C.L.
DRAWN S.R.R.
TRACED B.D.B.
CHECKED G.C.L.

SUBMITTED R. L. Chapman Jr. BRIDGE ENGINEER
APPROVED W. W. Sinclair STATE HIGHWAY ENGINEER

NUMBER 3632