STATE	PROJECT NUMBER	SHEET No.	TOTAL SHEETS
GA.			

NOTE- FILL HEIGHT REFERRED TO IS MEASURED BETWEEN SUBGRADE AND TOP OF TOP SLAB.

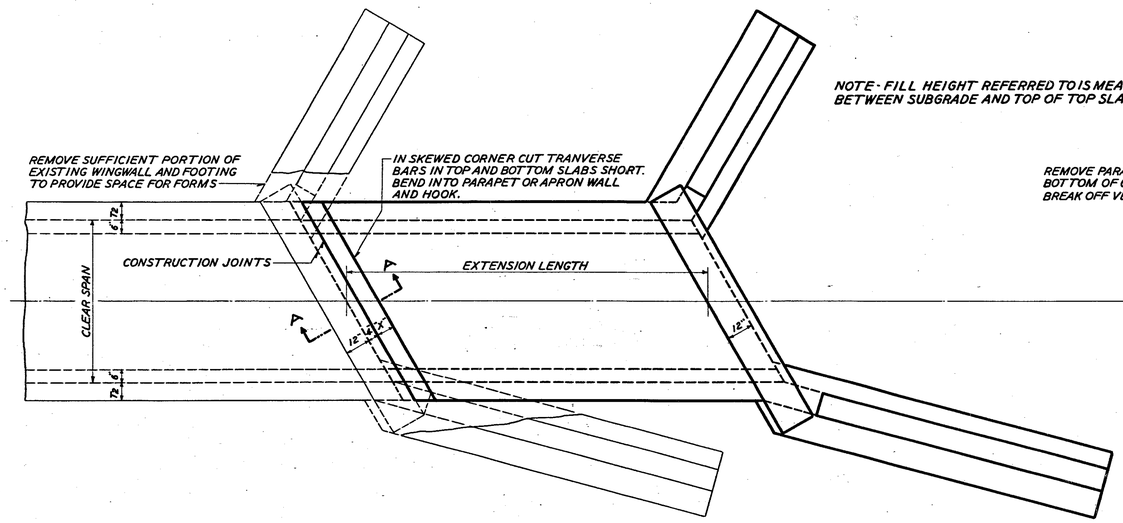

PLAN WHEN FILL IS OVER 4'-0" HIGH

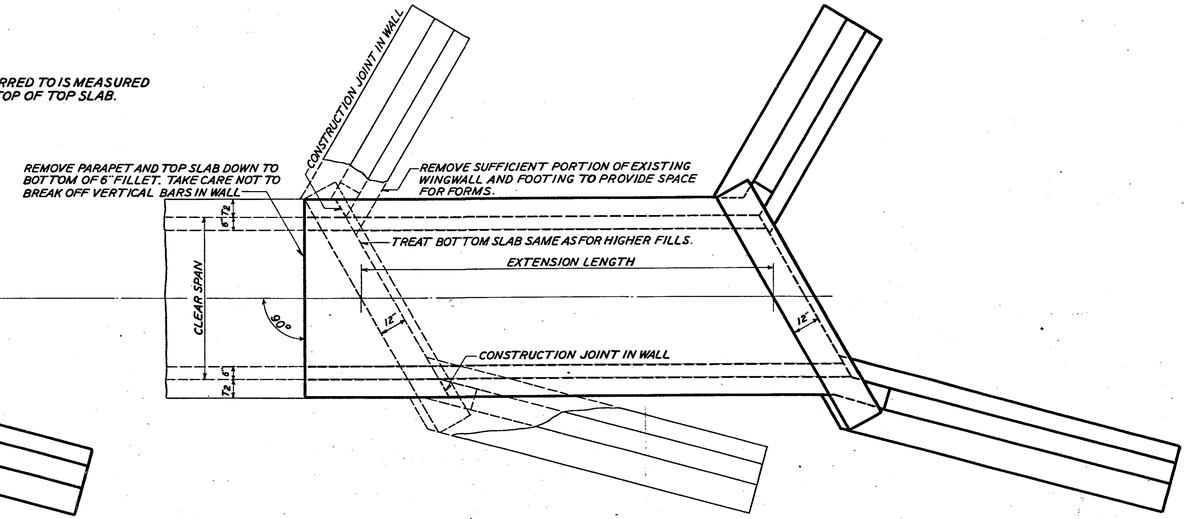

PLAN WHEN FILL IS 4'-0" OR LESS IN HEIGHT

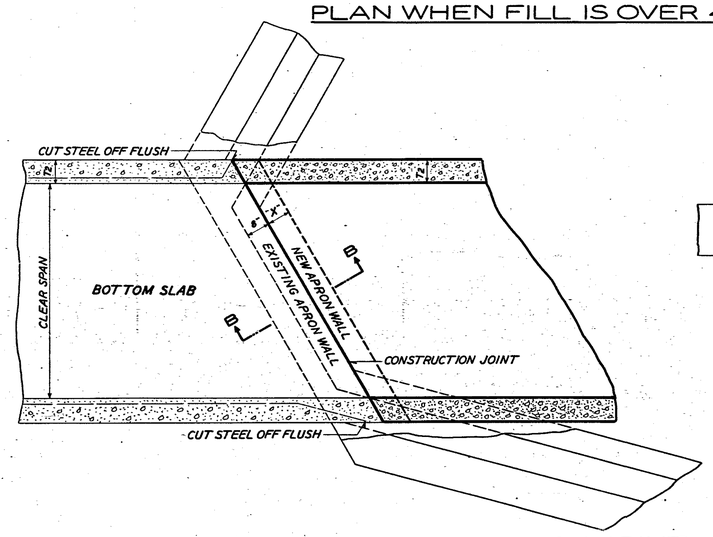

SECTIONAL PLAN AT CONSTRUCTION JOINT

TYPICAL FOR ALL FILL HEIGHTS

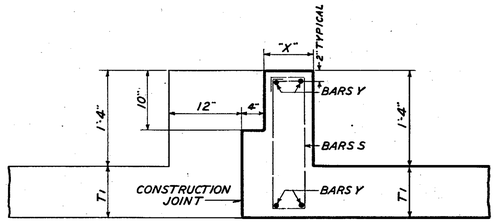

SECTION A-A

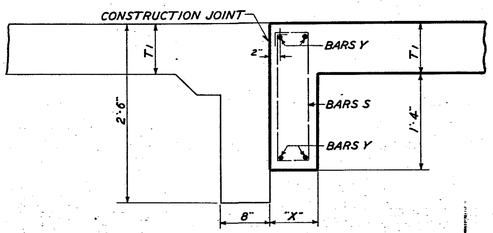

SECTION B-B

CLEAR SPAN	"X"	Y BARS	S BARS
3'-0"	8"	2-3/8"ϕ	3/8"ϕ AT 16
4'-0"	8"	2-3/8"ϕ	3/8"ϕ AT 16
5'-0"	8"	2-3/8"ϕ	3/8"ϕ AT 16
6'-0"	8"	2-1"ϕ	3/8"ϕ AT 9
7'-0"	8"	2-1"□	1/2"ϕ AT 10
8'-0"	8"	2-1 1/8"□	1/2"ϕ AT 7 1/2"
9'-0"	11"	3-1 1/8"□	1/2"ϕ AT 7
10'-0"	13"	3-1 1/8"□	1/2"ϕ AT 6

NOTE- HOOK BOTH ENDS OF BARS Y. NUMBER OF Y BARS SHOWN REQUIRED AT EACH PLACE NOTED ON SECTIONS A & B. PARAPET AT END OF CULVERT SHALL BE REINFORCED AS SHOWN ON SECTION A-A INSTEAD OF STANDARD REINFORCING.

GENERAL NOTES

ALL CONCRETE SHALL BE CLASS "A"

FOR DETAILS OF EXTENDED PORTION OF CULVERT SEE STANDARD DRAWING REFERRED TO ON SUMMARY SHEET OF PLANS.
EXISTING STRUCTURE SHOWN IN LIGHT LINES.
ADDED PORTION SHOWN IN HEAVY LINES.

REVISIONS	DATE	BY
GEN. NOTES REV.	7-28-78	R.M.U.

DEPARTMENT OF TRANSPORTATION
STATE OF GEORGIA

STANDARD DETAILS FOR EXTENDING CONCRETE BOX CULVERTS WITH SKEWS BELOW 75°

NO SCALE — JUNE 1955

DESIGNED E.E.L.
DRAWN E.E.L.
TRACED H.L.K.
CHECKED R.K.J.

SUBMITTED C. M. Crocker BRIDGE ENGINEER
APPROVED M. L. Stadham STATE HIGHWAY ENGINEER

NUMBER 2318