STATE	PROJECT NUMBER	SHEET NO.	TOTAL SHEETS
GA.			

CATCH BASIN (IF CATCH BASIN HAS LONGITUDINAL PIPE OVER 24", SEE DETAILS AT RIGHT)

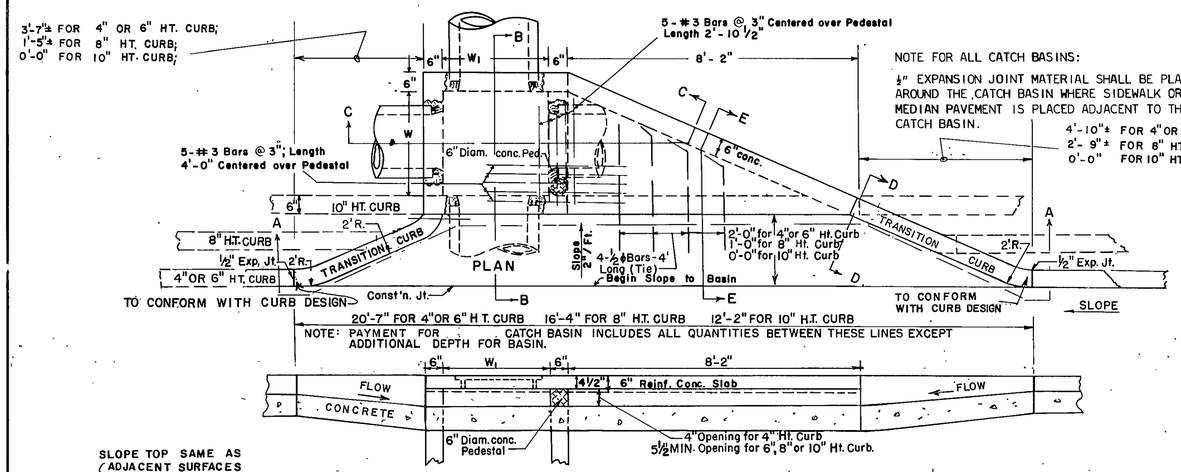

PLAN

SECTION A-A
SCALE: ½" = 1'

NOTE FOR ALL CATCH BASINS:

½" EXPANSION JOINT MATERIAL SHALL BE PLACED AROUND THE CATCH BASIN WHERE SIDEWALK OR MEDIAN PAVEMENT IS PLACED ADJACENT TO THE CATCH BASIN.

4'-10"± FOR 4" OR 6" HT. CURB
2'-9"± FOR 8" HT. CURB
0'-0" FOR 10" HT. CURB

CATCH BASIN (TYPICAL FOR CATCH BASIN WITH LONGITUDINAL PIPE OVER 24")

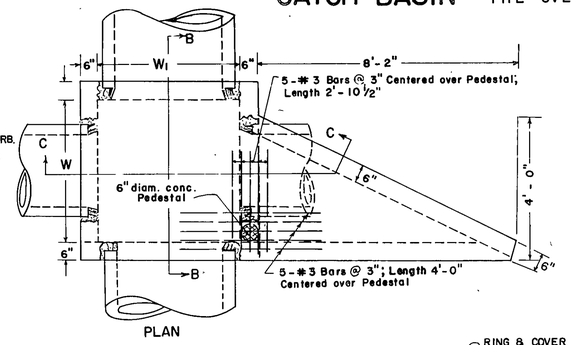

PLAN

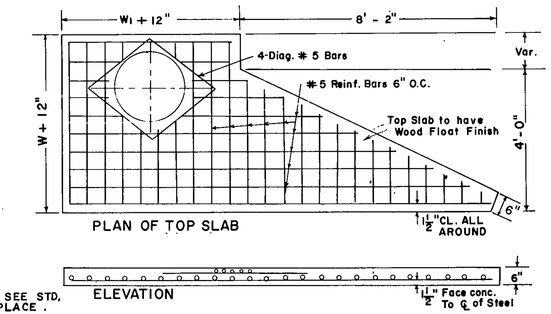

PLAN OF TOP SLAB

ELEVATION

SCALE: ½" = 1'

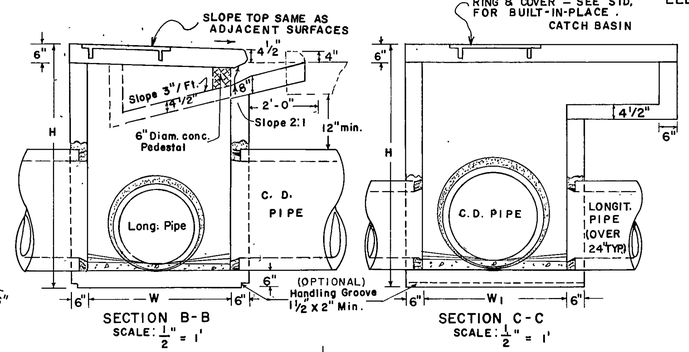

SECTION B-B
SCALE: ½" = 1'

SECTION C-C
SCALE: ½" = 1'

REINFORCING-ISOMETRIC VIEW

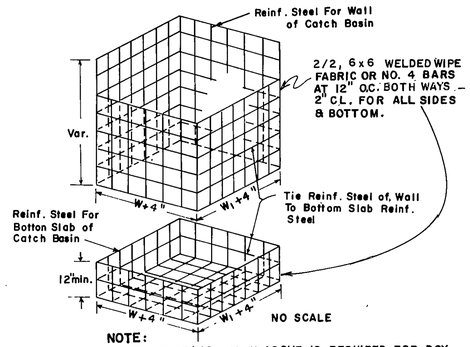

NOTE:
REINFORCING SHOWN ABOVE IS REQUIRED FOR BOX SHAPED BASIN. REINFORCING FOR CIRCULAR PRECAST ALTERNATE SHALL BE ACCORDING TO STD. 1040.

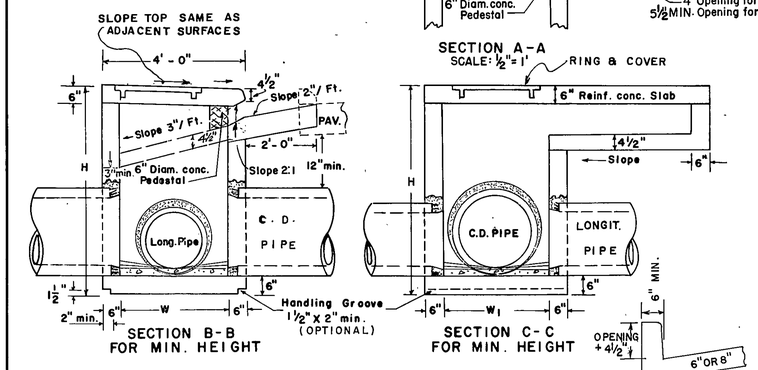

SECTION B-B FOR MIN. HEIGHT

SECTION C-C FOR MIN. HEIGHT

SEC. D-D

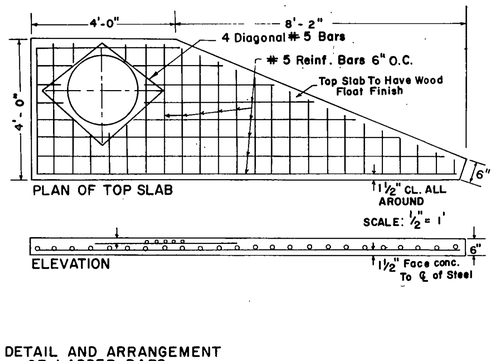

PLAN OF TOP SLAB

ELEVATION

SCALE: ½" = 1'

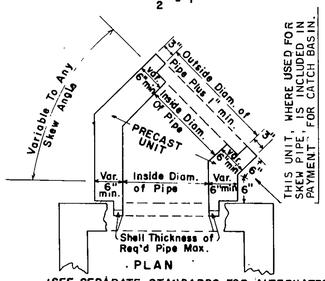

PLAN

(SEE SEPARATE STANDARDS FOR ALTERNATES)

METHOD OF CONNECTING SKEWED PIPE

IF THIS SWIVEL SECTION SLAB IS USED TO REDUCE THE W AND W_1 DIMENSIONS, INCREASE THE MIN. THICKNESS TO 9" AND USE REINF. STEEL. SEE DETAIL BELOW.

TYPICAL ISOMETRIC VIEW

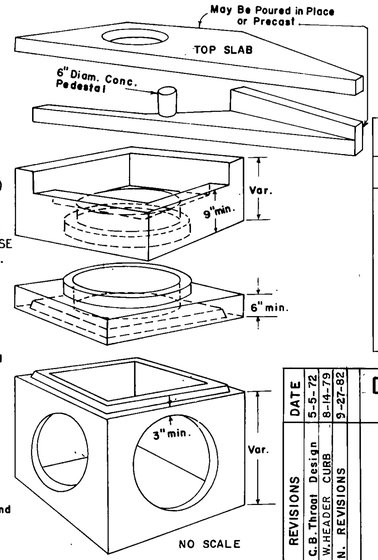

SWIVEL SECTION MAY BE USED WHERE SKEWED PIPE CONNECTS TO PRECAST CONCRETE BOX.

NOTE:
THE ABOVE VIEW DEPICTS PRECAST BOX. SEE SEPARATE STANDARDS FOR CIRCULAR ALTERNATE OR BUILT-IN-PLACE BOX.

ALL JOINTS BETWEEN PRECAST RISERS OR BETWEEN PRECAST BASE AND RISER WILL BE KEYED. KEYED JOINTS SHOWN ARE TYPICAL AND MAY BE VARIED.

DIMENSIONS FOR CATCH BASINS		
PIPE SIZE	NORMAL W OR W_1	MIN. H
12"	3'-0"	4'-4"
15"	3'-0"	4'-7"
18"	3'-0"	4'-10"
24"	3'-0"	5'-6"
30"	3'-6"	6'-2"
36"	4'-0"	6'-10"
42"	5'-0"	7'-4"
48"	5'-0"	8'-0"
54"	6'-0"	8'-6"
60"	6'-0"	9'-2"

NOTE:
DIMENSIONS FOR CATCH BASINS ARE BASED UPON TYPICAL OUTSIDE DIAMETERS OF CONCRETE PIPES AND MAY BE VARIED IF CONDITIONS PERMIT AND THE ENGINEER APPROVES. W & W_1 DIMENSIONS DO NOT HAVE TO BE EQUAL.

ALTERNATE:
BUILT-IN-PLACE, PRECAST BOX AND/OR PRECAST CIRCULAR UNITS WITH THE REQUIRED ADAPTERS REDUCERS, FITTINGS, CONNECTIONS, ETC. MAY BE USED IN COMBINATIONS.

NOTE:
FOR RING & COVER DETAILS AND OTHER DETAILS NOT SHOWN, SEE STANDARD 1033F FOR BUILT-IN-PLACE CATCH BASIN.

DETAIL AND ARRANGEMENT OF LADDER BARS

NOTE: AN ALTERNATE TYPE STEP APPROVED BY THE LABORATORY MAY BE SUBSTITUTED.

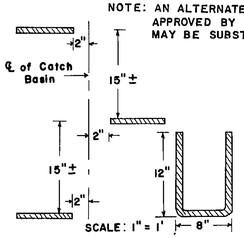

SCALE: 1" = 1'

NOTE:
NUMBER AND LOCATION OF LADDER BARS IN CATCH BASIN TO BE AS DIRECTED BY THE ENGINEER.

ALL CATCH BASINS WILL HAVE STEPS OR LADDER BARS.

METHOD OF CONNECTING PIPE (WHERE CONCRETE PIPE HAS TO BE CUT)

STEP 1
CUT CONCRETE PIPE LEAVING APPROXIMATELY 3" OF REINFORCING MESH EXPOSED.

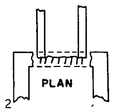

STEP 2
POSITION PIPE APPROXIMATELY 3" INTO OPENING OF WALL.

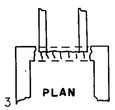

STEP 3
POSITION CONICAL CORE INSIDE OF PIPE AND SEAL WITH GROUT (1/2" MIN. THICKNESS OF GROUT) REMOVE CORE WHEN SET AND RUB GROUT TO SEAL JOINTS.

NO SCALE

DETAIL FOR REINFORCED STEEL

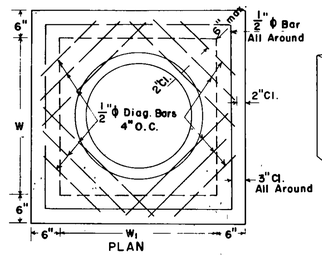

PLAN

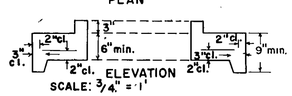

ELEVATION

SCALE: ¾" = 1'

SECTION E-E

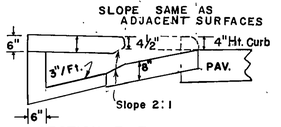

SCALE: ½" = 1'

DETAIL OF TOP SLAB, REINF. STEEL & CLEARANCES REQUIRED

SCALE: 1" = 1'

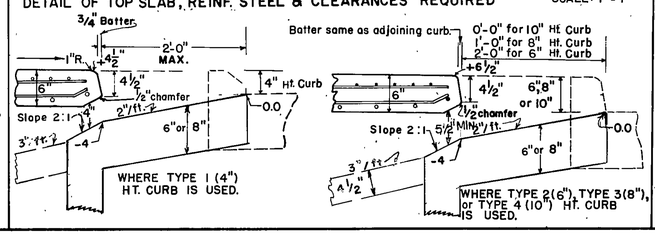

REVISIONS			
BY			DATE
R.M.U.	Rev. C.B. Throat Design		5-5-72
R.M.U.	USE W. HEADER CURB		8-14-79
R.M.U.	GEN. REVISIONS		9-27-82

DEPARTMENT OF TRANSPORTATION
STATE OF GEORGIA

STANDARD PRECAST CATCH BASINS

FOR USE WITH HEADER OR INTEGRAL CURBS
4", 6", 8" OR 10" HEIGHTS

SCALE AS SHOWN

FEB., 1967

DESIGNED
DRAWN RWH
TRACED AVS
CHECKED RBS

SUBMITTED STATE BRIDGE DESIGN ENGINEER
APPROVED STATE HIGHWAY ENGINEER

NUMBER 1033F PRECAST

Dietzgen N. O. 135 "Imperial"