7/6/2004 1:16:24 PM \\GDOT-DSN1\GOPLOT\GCF\GO_TIFF_OUTPUT.GCF GOWENS M:\GARY\ENGLISH STANDARDS UPDATED AND UPDATED INDEX\1017.PRF GO-RD6

STATE	PROJECT NUMBER	SHEET NO.	TOTAL SHEETS
GA.			

CONCRETE END WALLS

DIMENSIONS AND ESTIMATED QUANTITIES

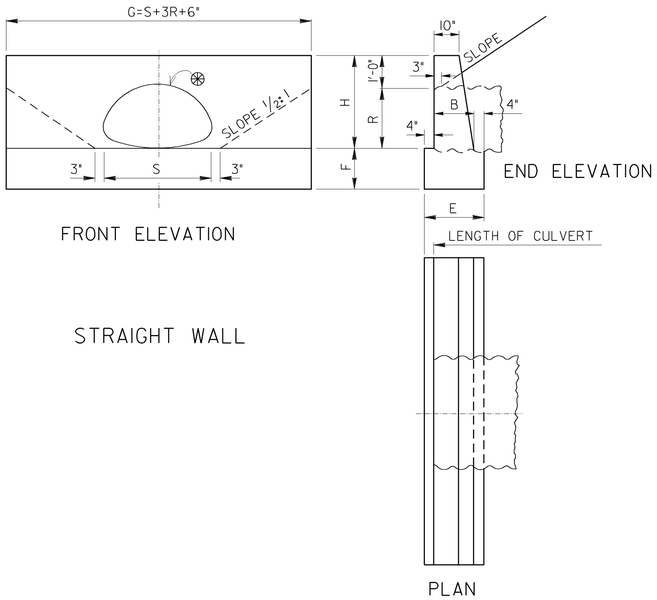

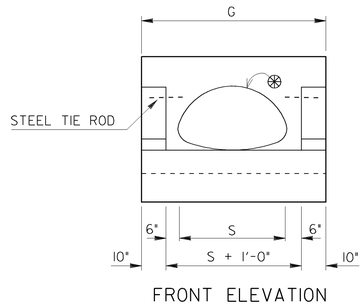

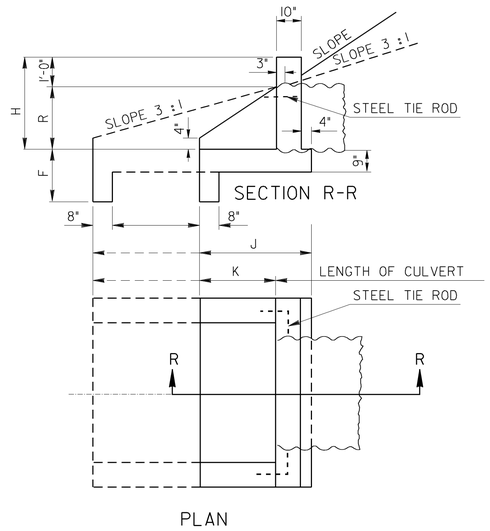

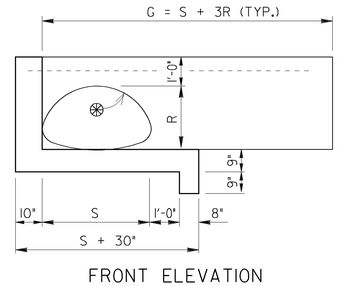

NOTE: LENGTH OF L TYPE WINGS MAY BE VARIED. TO SUIT LOCAL CONDITIONS AS DIRECTED BY THE ENGINEER.

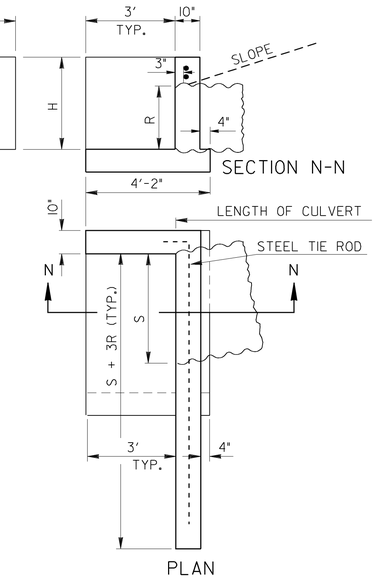

INLET BEVEL DETAIL

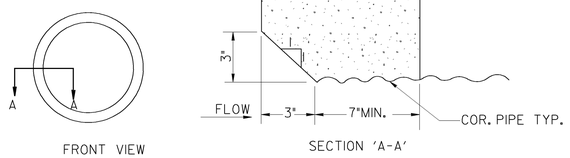

STRAIGHT WALL

ARCH NUMBER	GAUGE	DIMENSIONS: OPENING S SPAN	OPENING R RISE	OPENING AREA SQ.FT.	WALL G S+3R+6"	WALL H	WALL B	FOOTING E	FOOTING F	QUANTITIES ONE END WALL CL. 'B' CONCRETE WALL CU.FT.	FOOT CU.FT.	TOTAL CU.FT.	TOTAL CU.YD.	CONC. IN WALL AND FOOTING FOR EACH ADDITIONAL PIPE LINE
1	16	18"	11"	1.1	4'-9"	1'-11"	1'-2"	1'-10"	1'-0"	7.91	8.71	16.62	0.62	0.30
2	16	22"	13"	1.5	5'-7"	2'-1"	1'-2"	1'-10"	1'-0"	10.01	10.24	20.25	0.75	0.35
3	16	26"	15½"	2.1	6'-6½"	2'-3½"	1'-2"	1'-10"	1'-2"	12.74	13.99	26.73	0.99	0.44
4	14	30"	17"	2.8	7'-3"	2'-5"	1'-3"	1'-11"	1'-3"	15.07	17.37	32.44	1.20	0.52
5	14	37"	21"	4.3	8'-10"	2'-9"	1'-4"	2'-0"	1'-4"	21.19	23.56	44.75	1.66	0.66
6	12	44"	25"	5.9	10'-5"	3'-1"	1'-4"	2'-0"	1'-4"	27.83	27.78	55.61	2.06	0.78
7	12	52"	30"	8.4	12'-4"	3'-6"	1'-6"	2'-2"	1'-6"	39.55	40.08	79.63	2.95	1.05
8	12	59"	34"	10.6	13'-11"	3'-10"	1'-7"	2'-3"	1'-7"	50.33	49.58	99.91	3.70	1.27
9	12	66"	38"	13.2	15'-6"	4'-2"	1'-9"	2'-5"	1'-8"	64.48	62.43	126.91	4.70	1.56
10	10	72"	44"	16.9	17'-6"	4'-8"	2'-0"	2'-8"	2'-0"	89.00	93.33	182.33	6.75	2.11

L TYPE WINGS

ARCH NUMBER	GAUGE	DIMENSIONS: OPENING S SPAN	OPENING R RISE	OPENING AREA SQ.FT.	WALL H	WALL G S + 3R	WALL S + 30"	QUANTITIES ONE END WALL CL. 'B' CONCRETE WALL CU.FT.	FOOT CU.FT.	TOTAL CU.FT.	TOTAL CU.YD.	STEEL TIE RODS
1	16	18"	11"	1.1	1'-11"	4'-3"	4'-0"	11.99	14.58	26.57	0.98	2-3/4"DIA. 4'-3"LONG
2	16	22"	13"	1.5	2'-1"	5'-1"	4'-4"	14.23	15.62	29.85	1.11	2-3/4"DIA. 5'-1"LONG
3	16	26"	15½"	2.1	2'-3½"	6'-0½"	4'-8"	17.11	16.67	33.78	1.25	2-3/4"DIA. 6'-0"LONG
4	14	30"	17"	2.8	2'-5"	6'-9"	5'-0"	18.98	17.71	36.69	1.36	2-3/4"DIA. 6'-9"LONG
5	14	37"	21"	4.3	2'-9"	8'-4"	5'-7"	24.30	19.53	43.83	1.62	2-3/4 "DIA. 8'-4"LONG
6	12	44"	25"	5.9	3'-1"	9'-11"	6'-2"	30.41	21.36	51.77	1.92	2-3/4 "DIA. 9'-11"LONG
7	12	52"	30"	8.4	3'-6"	11'-10"	6'-10"	38.69	23.44	62.13	2.30	2-3/4 "DIA. 11'-10"LONG
8	12	59"	34"	10.6	3'-10"	13'-5"	7'-5"	46.27	25.26	71.53	2.65	2-3/4 "DIA. 13'-5"LONG
9	12	66"	38"	13.2	4'-2"	15'-0"	8'-0"	54.39	27.08	81.47	3.02	2-3/4 "DIA. 15'-0"LONG
10	10	72"	44"	16.9	4'-8"	17'-0"	8'-6"	66.93	28.65	95.58	3.54	2-3/4 "DIA. 17'-0"LONG

U TYPE WINGS

1½:1 FILL SLOPE

ARCH NUMBER	GAUGE	DIMENSIONS: OPENING S SPAN	OPENING R RISE	OPENING AREA SQ.FT.	WALL G	WALL H	WALL K	FOOTING F	FOOTING J	QUANTITIES ONE END WALL CL. 'B' CONCRETE WALL CU.FT.	FOOT CU.FT.	TOTAL CU.FT.	TOTAL CU.YD.	STEEL TIE RODS
1	16	18"	11"	1.1	4'-2"	1'-11"	0'-11"	1'-3"	2'-1"	6.7	7.9	14.6	0.54	NONE
2	16	22"	13"	1.5	4'-6"	2'-1"	1'-2"	1'-3"	2'-4"	7.9	9.4	17.3	0.64	NONE
3	16	26"	15½"	2.1	4'-10"	2'-3½"	1'-6"	1'-3"	2'-8"	9.5	11.3	20.8	0.77	2¾"DIA. 2'-0"LONG
4	14	30"	17"	2.8	5'-2"	2'-5"	1'-8"	1'-6"	2'-10"	10.5	13.6	24.1	0.89	2¾"DIA. 2'-0"LONG
5	14	37"	21"	4.3	5'-9"	2'-9"	2'-2"	1'-6"	3'-4"	13.4	17.2	30.6	1.13	2¾"DIA. 2'-6"LONG
6	12	44"	25"	5.9	6'4"	3'-1"	2'-8"	1'-9"	3'-10"	16.7	22.4	39.1	1.45	2¾"DIA. 2'-6"LONG
7	12	52"	30"	8.4	7'-0"	3'-6"	3'-3	1'-9"	4'-5"	21.1	27.9	49.0	1.81	2¾"DIA. 3'-0"LONG
8	12	59"	34"	10.6	7'-7"	3'-10"	3'-9"	2'-0"	4'-11"	25.3	34.3	59.6	2.21	2¾"DIA. 3'-6"LONG
9	12	66"	38"	13.2	8'-2"	4'-2"	4'-3"	2'-0"	5'-5"	29.8	40.0	69.8	2.59	2¾"DIA. 4'-0"LONG
10	10	72"	44"	16.9	8'-8"	4'-8"	5'-0"	2'-0"	6'-2"	36.3	47.3	83.6	3.10	2¾"DIA. 4'-6"LONG

3 :1 FILL SLOPE

ARCH NUMBER	K	J	QUANTITIES ONE END WALL CL. 'B' CONCRETE WALL CU.FT.	FOOT CU.FT.	TOTAL CU.FT.	TOTAL CU.YD.	STEEL TIE RODS
1	1'-9"	2'-11"	7.6	10.5	18.1	0.67	NONE
2	2'-3"	3'-5"	9.2	13.0	22.2	0.82	NONE
3	2'-11"	4'-2"	11.4	16.7	28.1	1.04	2¾"DIA. 2'-0"LONG
4	3'-3"	4'-5"	12.8	19.7	32.5	1.20	2¾"DIA. 2'-0"LONG
5	4'-3"	5'-5"	17.0	26.2	43.2	1.60	2¾"DIA. 2'-6"LONG
6	5'-3"	6'-5"	21.9	34.7	56.6	2.10	2¾"DIA. 2'-6"LONG
7	6'-6"	7'-8"	28.8	44.9	73.7	2.72	2¾"DIA. 3'-0"LONG
8	7'-6"	8'-8"	35.2	55.6	90.8	3.36	2¾"DIA. 3'-6"LONG
9	8'-6"	9'-8"	42.2	66.0	108.2	4.01	2¾"DIA. 4'-0"LONG
10	10.0"	11'-2"	53.0	79.8	132.8	4.92	2¾"DIA. 4'-6"LONG

❀ IF PIPE HAS NEITHER A GROOVE NOR A SPIGOT AT ITS INLET, AN INLET BEVEL WILL BE REQ'D.

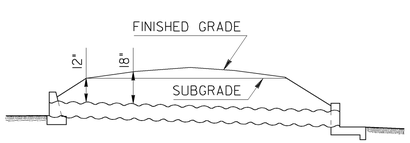

SECTION OF ROADWAY SHOWING DESIRABLE MINIMUM DEPTHS OF FILL OVER CULVERTS

NOTE:
GRADE GENERALLY TO FOLLOW SLOPE OF STREAM. DESIRABLE LIMITS 2% TO 4%.

APPROXIMATE DIMENSIONS OF THE PIPE ARCH

ARCH NUMBER	SPAN INSIDE	RISE INSIDE	OUTSIDE MEASUREMENTS OVER PLAIN END: W	R	B	C
1	18"	11"	4½"	11⅜"	5"	10¼"
2	22"	13"	4½"	13"	5⅛"	13⅝"
3	26"	15½"				
4	30"	17"	5½"	18½"	6⅝"	19¾"
5	37"	21"	6"	21"	7¾"	25½"
6	44"	25"	6"	24"	8¼"	33¼"
7	52"	30"	6"	28"	8¾"	41¼"
8	59"	34"	8"	31"	10¾"	43¾"
9	66"	38"	8"	35"	11"	51¼"
10	72"	44"	8"	38"	11¾"	55½"

DIMENSIONS ARE MEASURED FROM INSIDE CRESTS OF CORRUGATIONS.

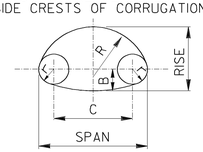

GENERAL NOTES:

1. QUANTITIES SHOWN ARE TO BE USED WHEN CORRUGATED METAL PIPE IS DESIGNATED. WHEN ANY OTHER TYPE OF PIPE IS DESIGNATED DEDUCTIONS SHALL BE MADE FROM QUANTITY SHOWN TO ALLOW FOR THICKNESS OF PIPE.
2. DIMENSION 'F" TO BE VARIED TO FIT LOCAL CONDITIONS. THE TABULATED VALUES ARE RECOMMENDED UNDER USUAL CONDITIONS BUT FOOTINGS SHOULD BE PROTECTED FROM SCOUR.
3. CHAMFER ALL EXPOSED EDGES ¾".
4. PROVIDE GOOD FOUNDATION UNDER PIPES USING CONCRETE IF NATURAL CONDITIONS ARE VERY BAD. PROTECT BED AND SLOPES WITH RIP RAP OR PAVING WHERE NECESSARY, ESPECIALLY NEAR OUTLETS. PAVING TO BE LAID IN CEMENT MORTAR OR GROUTED.
5. A 2" TOLERANCE, PLUS OR MINUS, ON SPAN AND RISE WILL BE PERMITTED, BUT OPENING SPECIFIED FOR VARIOUS ARCHES WILL BE REQUIRED.
6. PIPE ARCH CULVERTS ARE TO BE USED ONLY WHERE SUFFICIENT HEADROOM IS NOT AVAILABLE FOR USE OF FULL ROUND PIPE. USE MULTIPLE LINE OF ROUND PIPE WHERE FEASIBLE.

DEPARTMENT OF TRANSPORTATION
STATE OF GEORGIA

STANDARD
PIPE ARCH CULVERTS
18" TO 72" SPAN
CONCRETE ENDWALLS

SCALE AS SHOWN — REV. & REDR. AUG. 1999

DESIGNED
TRACED
CHECKED
REVISED

(SUBMITTED) STATE ROAD & AIRPORT DESIGN ENGINEER
(APPROVED) CHIEF ENGINEER

NUMBER 1017

7/6/2004 1:16:24 PM \\GDOT-DSN1\GOPLOT\GCF\GO_TIFF_OUTPUT.GCF GOWENS M:\GARY\ENGLISH STANDARDS UPDATED AND UPDATED INDEX\1017.PRF