RELEASED FOR CONSTRUCTION 01/19/2016

STATE	PROJECT NUMBER	SHEET NO.	TOTAL SHEETS
GA.	0013367		

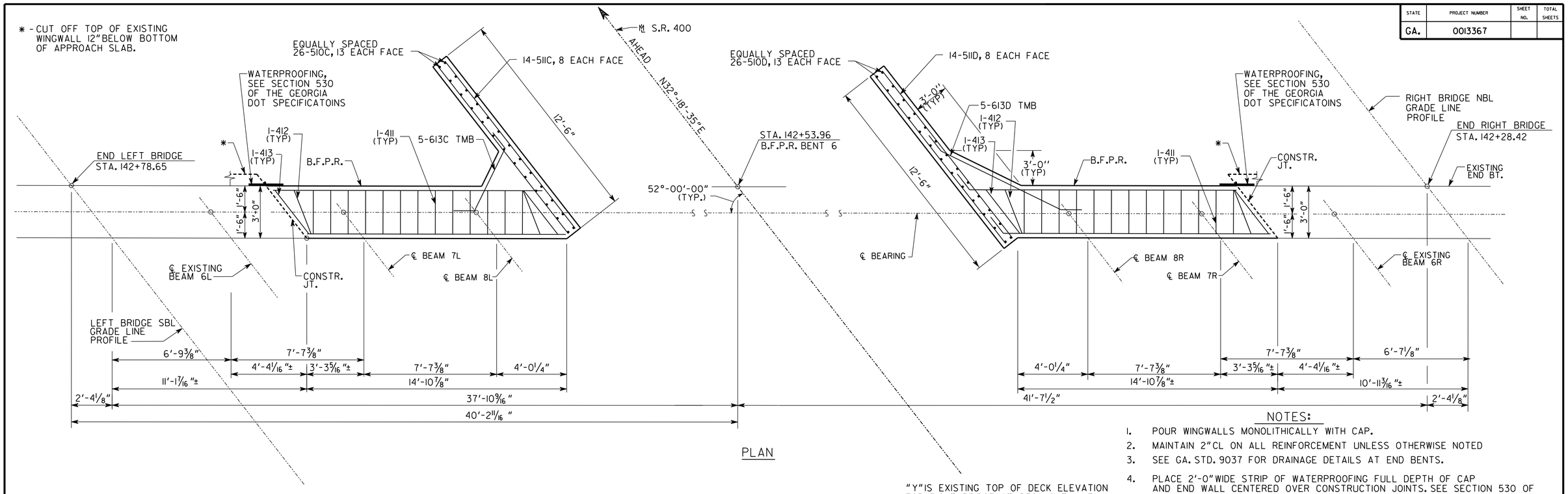

PLAN

NOTES:

1. POUR WINGWALLS MONOLITHICALLY WITH CAP.
2. MAINTAIN 2" CL ON ALL REINFORCEMENT UNLESS OTHERWISE NOTED
3. SEE GA. STD. 9037 FOR DRAINAGE DETAILS AT END BENTS.
4. PLACE 2'-0" WIDE STRIP OF WATERPROOFING FULL DEPTH OF CAP AND END WALL CENTERED OVER CONSTRUCTION JOINTS. SEE SECTION 530 OF THE SPECIFICATIONS FOR ADDITIONAL INFORMATION. COST SHALL BE INCLUDED IN OTHER ITEMS.
5. SPREAD FOOTING FOUNDATION DESIGNED TO BE PLACED ON ROCK EMBANKMENT FOR A BEARING PRESSURE NOT TO EXCEED 4 KSF.
6. THE FOOTING EXCAVATIONS SHOULD BE PROTECTED FROM STANDING WATER AND SURFACE RUN-OFF. FOOTINGS SHOULD BE POURED AS SOON AS PRACTICAL AFTER EXCAVATION.

"X" IS EXISTING TOP OF DECK ELEVATION FOR LEFT BRIDGE AT DECK CUT LINE AND B.F.P.R. TO BE DETERMINED BY CONTRACTOR, SEE BRIDGE SHEET 3.

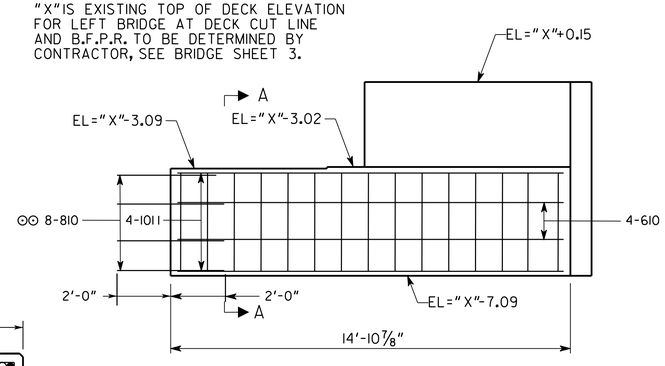

"Y" IS EXISTING TOP OF DECK ELEVATION FOR RIGHT BRIDGE AT DECK CUT LINE AND B.F.P.R. TO BE DETERMINED BY CONTRACTOR, SEE BRIDGE SHEET 3.

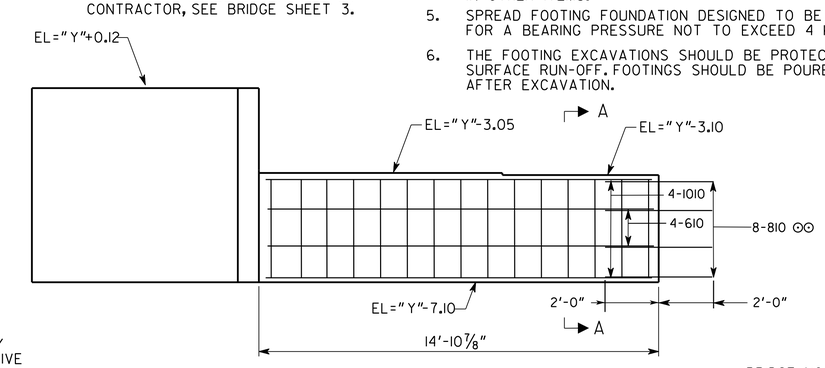

⊙⊙ DRILL 1 1/8" DIA. HOLE 2'-0" DEEP FOR 810 BAR TO BE ADHESIVELY ANCHORED USING APPROVED ADHESIVE IN GDOT QPL.

ELEVATION
(LOOKING AHEAD)

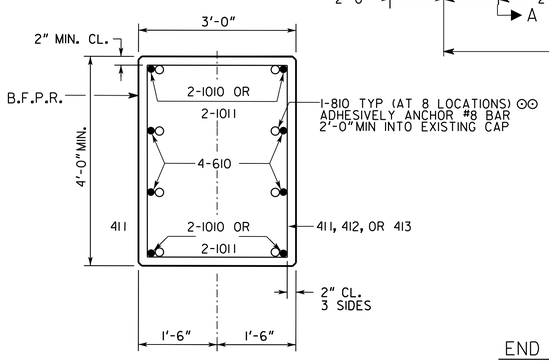

SECTION A-A
SCALE: NONE

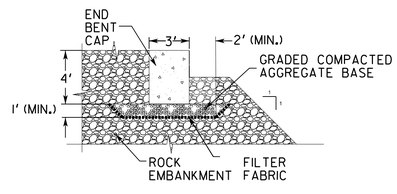

END BENT CAP ON ROCK EMBANKMENT DETAIL
SCALE: NONE
CONSTRUCTION END BENT ON 1'-0" MIN THICK LAYER OF GRADED COMPACTED AGGREGATE BASE MATERIAL ON FILTER FABRIC FOUNDED ON EXISTING OR CONSTRUCTED ROCK EMBANKMENT

SUBSTRUCTURE QUANTITIES

ITEM		BENT 6
CY CLASS A CONCRETE	LEFT BRIDGE	10.7
LB BAR REINF STEEL		1024
CY CLASS A CONCRETE	RIGHT BRIDGE	10.7
LB BAR REINF STEEL		1057

BRIDGE NO. 1 LEFT AND RIGHT

INFRASTRUCTURE CONSULTING & ENGINEERING

GEORGIA
DEPARTMENT OF TRANSPORTATION
OFFICE OF INNOVATIVE DELIVERY

BENT 6

S.R. 400 BRIDGES OVER BIG CREEK

FORSYTH COUNTY 0013367

SCALE: 3/8" = 1'-0" (UNLESS NOTED) OCTOBER 2015

DATE	REVISIONS	BY

DRAWING NO. 35-0016

BRIDGE SHEET 16 OF 18

DESIGNED	MDN	CHECKED	PWG	REVIEWED	DLC
DRAWN	RMH	LIAISON	DLC	APPROVED	WMD

1 INCH WHEN PRINTED FULL SIZE