RELEASED FOR CONSTRUCTION 01/19/2016

STATE	PROJECT NUMBER	SHEET NO.	TOTAL SHEETS
GA.	0013367		

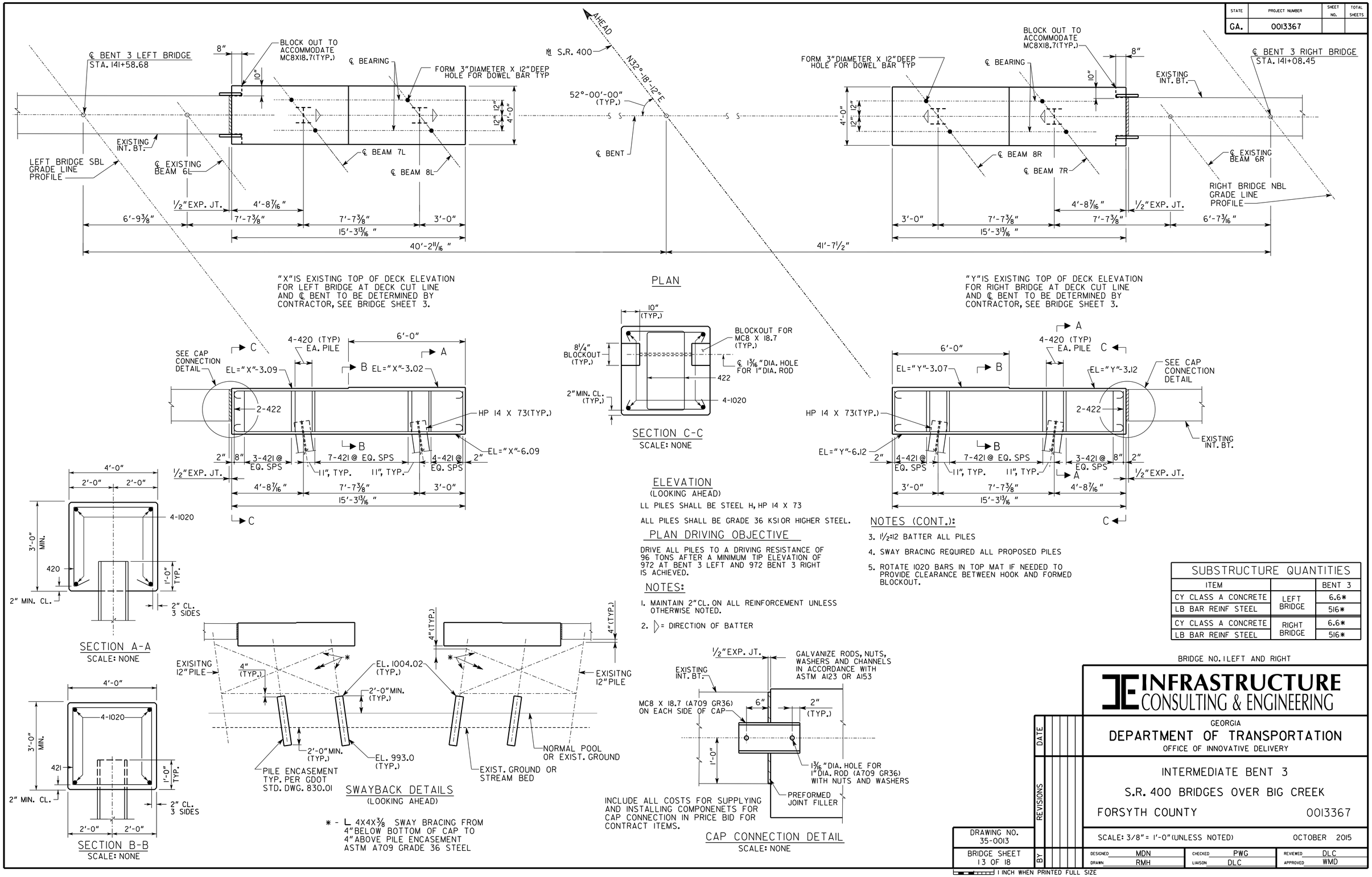

SUBSTRUCTURE QUANTITIES		
ITEM		BENT 3
CY CLASS A CONCRETE	LEFT BRIDGE	6.6*
LB BAR REINF STEEL		516*
CY CLASS A CONCRETE	RIGHT BRIDGE	6.6*
LB BAR REINF STEEL		516*

BRIDGE NO. 1 LEFT AND RIGHT

INFRASTRUCTURE CONSULTING & ENGINEERING

GEORGIA
DEPARTMENT OF TRANSPORTATION
OFFICE OF INNOVATIVE DELIVERY

INTERMEDIATE BENT 3
S.R. 400 BRIDGES OVER BIG CREEK
FORSYTH COUNTY 0013367

SCALE: 3/8" = 1'-0" (UNLESS NOTED) OCTOBER 2015

REVISIONS	DATE	BY

DRAWING NO. 35-0013
BRIDGE SHEET 13 OF 18

DESIGNED	MDN	CHECKED	PWG	REVIEWED	DLC
DRAWN	RMH	LIAISON	DLC	APPROVED	WMD

1 INCH WHEN PRINTED FULL SIZE