RELEASED FOR CONSTRUCTION 01/19/2016

STATE	PROJECT NUMBER	SHEET NO.	TOTAL SHEETS
GA.	0013367		

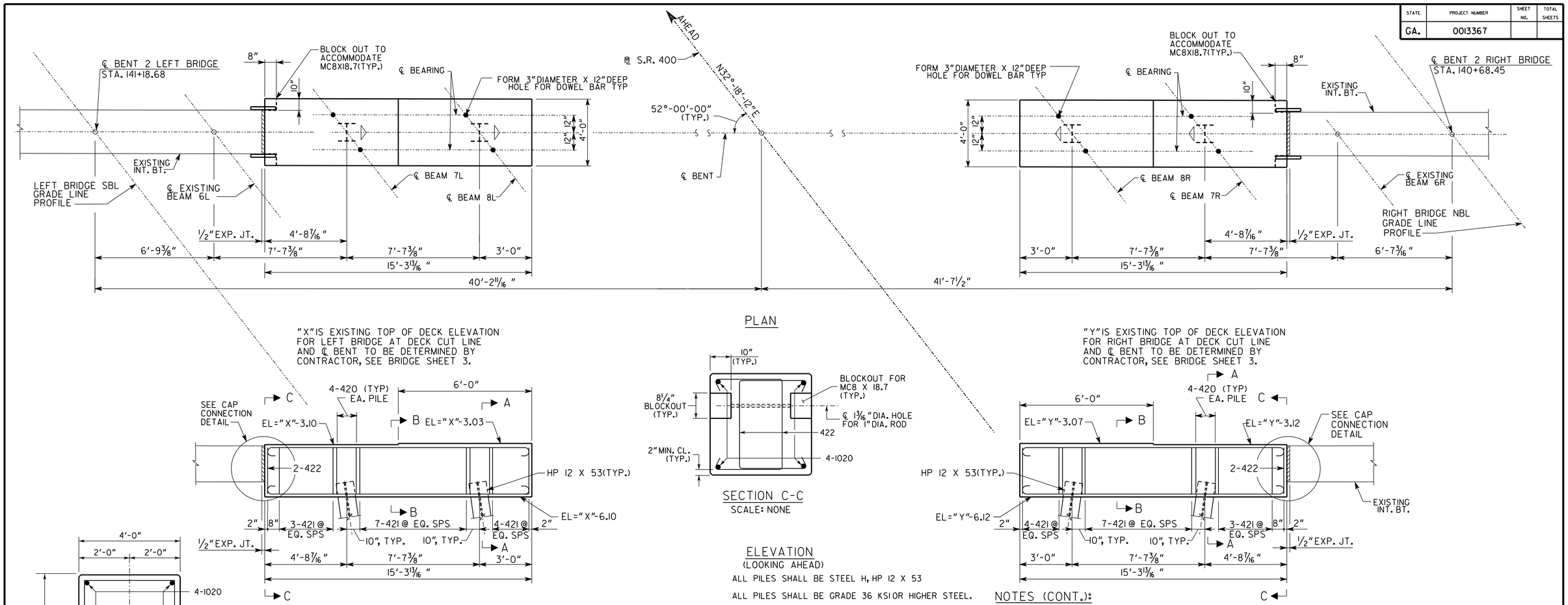

PLAN

"X"IS EXISTING TOP OF DECK ELEVATION FOR LEFT BRIDGE AT DECK CUT LINE AND ℄ BENT TO BE DETERMINED BY CONTRACTOR, SEE BRIDGE SHEET 3.

SECTION C-C
SCALE: NONE

"Y"IS EXISTING TOP OF DECK ELEVATION FOR RIGHT BRIDGE AT DECK CUT LINE AND ℄ BENT TO BE DETERMINED BY CONTRACTOR, SEE BRIDGE SHEET 3.

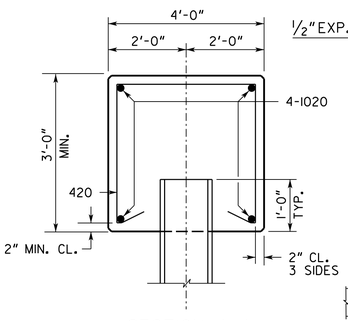

SECTION A-A
SCALE: NONE

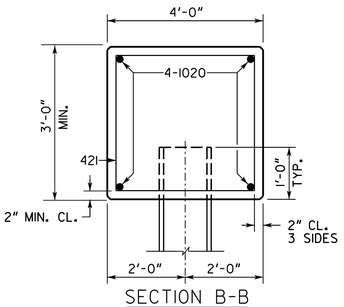

SECTION B-B
SCALE: NONE

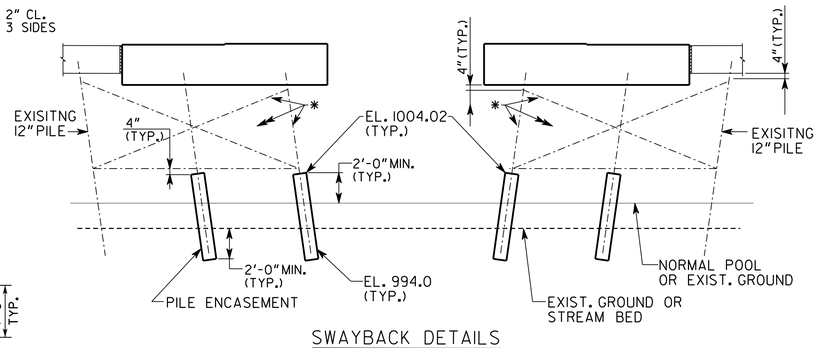

SWAYBACK DETAILS
(LOOKING AHEAD)

* - L 4X4X3/8 SWAY BRACING FROM 4"BELOW BOTTOM OF CAP TO 4"ABOVE PILE ENCASEMENT ASTM A709 GRADE 36 STEEL

ELEVATION
(LOOKING AHEAD)

ALL PILES SHALL BE STEEL H, HP 12 X 53

ALL PILES SHALL BE GRADE 36 KSI OR HIGHER STEEL.

PLAN DRIVING OBJECTIVE

DRIVE ALL PILES TO A DRIVING RESISTANCE OF 70 TONS AFTER A MINIMUM TIP ELEVATION OF 980 AT BENT 2 LEFT AND 971 AT BENT 2 RIGHT IS ACHIEVED.

NOTES:

1. MAINTAIN 2"CL. ON ALL REINFORCEMENT UNLESS OTHERWISE NOTED.
2. ▷ = DIRECTION OF BATTER

NOTES (CONT.):

3. 1 1/2:12 BATTER ALL PILES
4. SWAY BRACING REQUIRED ALL PROPOSED PILES
5. ROTATE 1020 BARS IN TOP MAT IF NEEDED TO PROVIDE CLEARANCE BETWEEN HOOK AND FORMED BLOCKOUT.

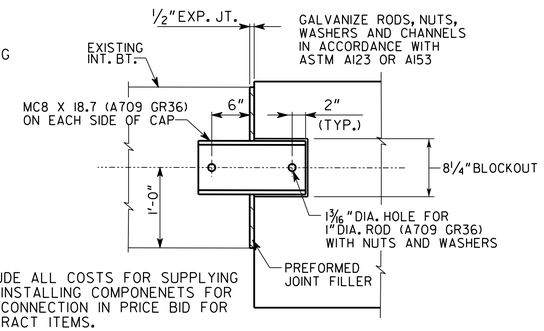

INCLUDE ALL COSTS FOR SUPPLYING AND INSTALLING COMPONENETS FOR CAP CONNECTION IN PRICE BID FOR CONTRACT ITEMS.

CAP CONNECTION DETAIL
SCALE: NONE

SUBSTRUCTURE QUANTITIES

ITEM		BENT 2
CY CLASS A CONCRETE	LEFT BRIDGE	6.6*
LB BAR REINF STEEL		516*
CY CLASS A CONCRETE	RIGHT BRIDGE	6.6*
LB BAR REINF STEEL		516*

BRIDGE NO. 1 LEFT AND RIGHT

INFRASTRUCTURE CONSULTING & ENGINEERING

GEORGIA
DEPARTMENT OF TRANSPORTATION
OFFICE OF INNOVATIVE DELIVERY

INTERMEDIATE BENT 2
S.R. 400 BRIDGES OVER BIG CREEK
FORSYTH COUNTY 0013367

REVISIONS | DATE | BY

DRAWING NO. 35-0012
BRIDGE SHEET 12 OF 18

SCALE: 3/8" = 1'-0" (UNLESS NOTED) OCTOBER 2015

DESIGNED MDN | CHECKED PWG | REVIEWED DLC
DRAWN RMH | LIAISON DLC | APPROVED WMD

1 INCH WHEN PRINTED FULL SIZE