STATE	PROJECT NUMBER	SHEET NO.	TOTAL SHEETS
GA.	0013367		

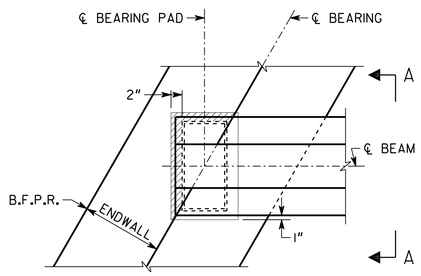

PLAN
BENT 1 SHOWN
BENT 6 SIMILAR

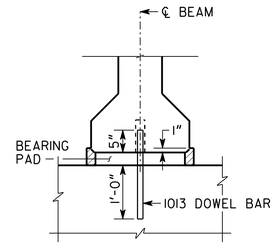

PREFORMED FOAM JOINT FILLER SHALL BE FURNISHED IN ACCORDANCE WITH SUB-SECTION 833.2.10 OF THE GEORGIA DOT SPECIFICATIONS.

ENDWALL NOT SHOWN

SECTION A-A

NOTES

1. BEARING PAD "A" AND "C" SHALL BE FURNISHED IN ACCORDANCE WITH AASHTO SPECIFICATIONS DIVISION II, SECTION 18, BEARINGS.
2. BEARING PADS SHALL BE MADE OF 60 DUROMETER HARDNESS NEOPRENE, GRADE 2 OR HIGHER.
3. 3" DIAMETER HOLE IN BEARING PADS MAY BE FORMED OR DRILLED.
4. USE OF 1½° MOLD DRAFT IS OPTIONAL.
5. PAD "C" IS FOR PLACEMENT UNDER EXISTING GIRDERS 1 THRU G6 AT BENT 1 AND 6 IN ACCORDANCE WITH BRIDGE REHABILITATION DETAILS
6. STEEL SHIM THICKNESS, AND QUANTITY IF NEEDED IS TO BE DETERMINED AT TIME OF CONSTRUCTION.
7. WHERE SHIMS ARE REQUIRED, PLACE PAD "C" UNDER GIRDER WITH SHIM UNDER PAD. PLACE AN ADDITIONAL ⅛" THICK DUROMETER 60 PAD WITH PAD "C" PLAN DIMENSIONS BETWEEN SHIM STACK AND TOP OF EXISTING CAP.
8. SHIM PLATES SHALL BE ASTM A 709 GRADE 36 AND SHALL BE GALVANIZED IN ACCORDANCE WITH ASTM A 123.
9. SEE BRIDGE REHABILITATION PLAN SHEETS FOR INSTALLATION OF BEARING PAD "C".

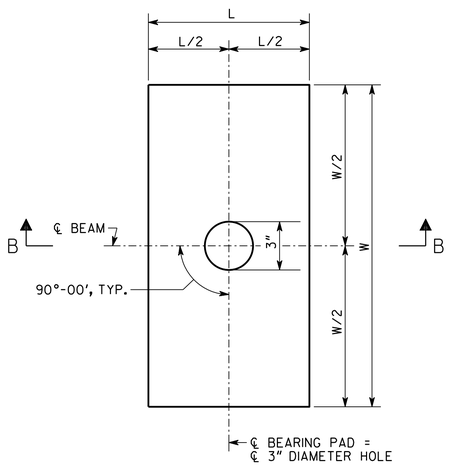

PLAN

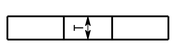

SECTION B-B

BEARING PAD "A"

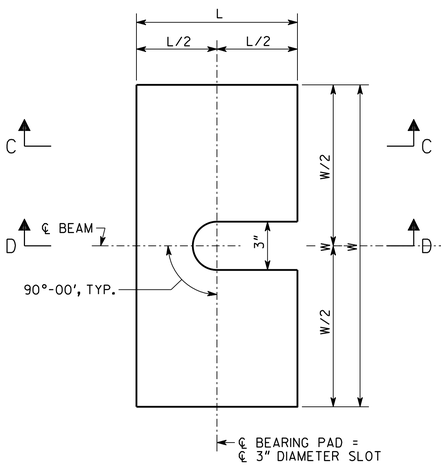

PLAN

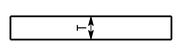

SECTION C-C

BEARING PAD "C"

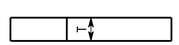

SECTION D-D

BEARING PAD "C"

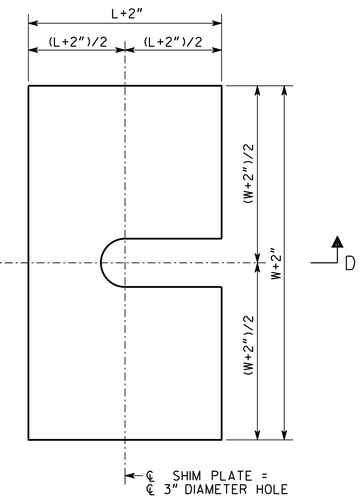

BENT	BEARING PADS										
									DESIGN LOADS (KIPS)		
	DESIGN	QTY. EA.	W	L	T	NUMBER OF LOAD PLATES	NUMBER OF INTERNAL PLATE(S)	DESIGN SHEAR DEFLECTION	DEAD LOAD	LIVE LOAD (NO IMPACT)	DEAD LOAD + LIVE LOAD
1 LEFT	PAD A	2	16"	9"	½"	-	-	-	-	-	-
1 LEFT	PAD C	6	14"	9"	½"	-	-	-	-	-	-
2 LEFT	PAD A	2	16"	9"	½"	-	-	-	-	-	-
3 LEFT	PAD A	2	16"	9"	½"	-	-	-	-	-	-
4 LEFT	PAD A	2	16"	9"	½"	-	-	-	-	-	-
5 LEFT	PAD A	2	16"	9"	½"	-	-	-	-	-	-
6 LEFT	PAD A	2	16"	9"	½"	-	-	-	-	-	-
6 LEFT	PAD C	6	14"	9"	½"	-	-	-	-	-	-
1 RIGHT	PAD A	2	16"	9"	½"	-	-	-	-	-	-
1 RIGHT	PAD C	6	14"	9"	½"	-	-	-	-	-	-
2 RIGHT	PAD A	2	16"	9"	½"	-	-	-	-	-	-
3 RIGHT	PAD A	2	16"	9"	½"	-	-	-	-	-	-
4 RIGHT	PAD A	2	16"	9"	½"	-	-	-	-	-	-
5 RIGHT	PAD A	2	16"	9"	½"	-	-	-	-	-	-
6 RIGHT	PAD A	2	16"	9"	½"	-	-	-	-	-	-
6 RIGHT	PAD C	6	14"	9"	½"	-	-	-	-	-	-

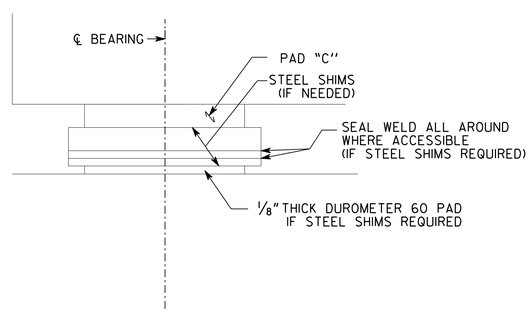

BRIDGE NO. 1 LEFT AND RIGHT

INFRASTRUCTURE CONSULTING & ENGINEERING

GEORGIA
DEPARTMENT OF TRANSPORTATION
OFFICE OF INNOVATIVE DELIVERY

BEARING PAD DETAILS
S.R. 400 BRIDGES OVER BIG CREEK
FORSYTH COUNTY 0013367

SCALE: NONE OCTOBER 2015

DRAWING NO. 35-0010
BRIDGE SHEET 10 OF 18

REVISIONS	BY	DATE

DESIGNED	MDN	CHECKED	PWG	REVIEWED	DLC
DRAWN	RMH	LIAISON	DLC	APPROVED	WMD

1 INCH WHEN PRINTED FULL SIZE

RELEASED FOR CONSTRUCTION 01/19/2016

p:\bridge\ga-01-PD.tbl
$$PWG$$
$$GDOTSPECS$$
$$SYTIMES$$