STATE	PROJECT NUMBER	SHEET NO.	TOTAL SHEETS
GA.	0013367		

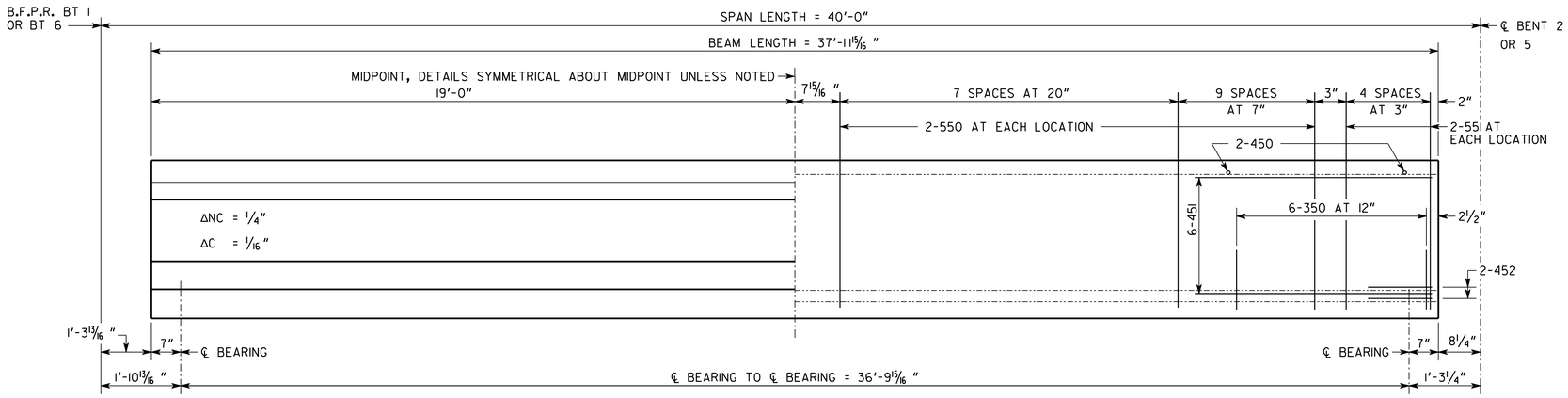

ELEVATION

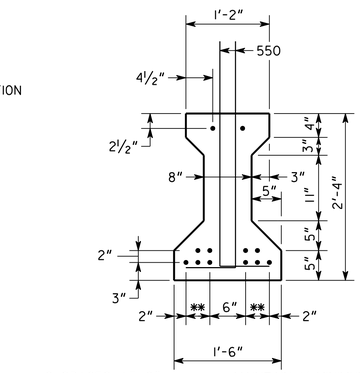

✱✱ 2 SPACES AT 2"

MAINTAIN 1" MINIMUM CLEARANCE UNLESS SHOWN.

• INDICATES 1/2" DIAMETER PRESTRESSED STRANDS.

SECTION AT MIDPOINT

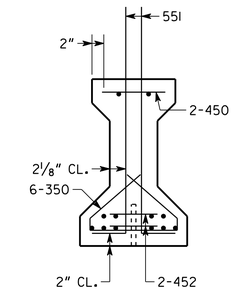

SECTION AT END

NOTES

1. BEAMS SHALL BE MAINTAINED IN AN UPRIGHT POSITION AT ALL TIMES AND SHALL BE PICKED UP WITHIN 3'-6" FROM THEIR ENDS. DISREGARDING THIS REQUIREMENT COULD LEAD TO COLLAPSE OF THE BEAM. PICK-UPS SHALL BE EMBEDDED TO WITHIN 4" OF THE BOTTOM OF THE BEAM. DETAILS OF PICK-UPS SHALL BE INCLUDED IN THE SHOP DRAWINGS.
2. CHAMFER EDGES OF BEAMS 1/2" OR 3/4".
3. HORIZONTAL DIMENSIONS ARE IN PLACE DIMENSIONS. THE BEAM LENGTH INCLUDES THE 1/8" EPOXY MORTAR AT EACH END. SHOP DRAWINGS SHALL ADJUST HORIZONTAL DIMENSIONS FOR GRADE AND FABRICATION EFFECTS SUCH AS SHRINKAGE AND ELASTIC SHORTENING.
4. AT ℄ BEARING, FORM A 1 3/4" DIAMETER X 7" DEEP HOLE AT THE FIXED ENDS AND A 4" X 1 3/4" X 7" DEEP SLOT AT THE EXPANSION ENDS FOR A 1 1/2" DIAMETER SMOOTH DOWEL. SEE PLAN AND ELEVATION SHEET FOR LOCATION OF FIXED AND EXPANSION ENDS.
5. TOPS OF BEAMS SHALL BE ROUGH FLOATED AT APPROXIMATELY THE TIME OF INITIAL SET. ENTIRE TOP SHALL BE SCRUBBED TRANSVERSELY WITH A COARSE BRUSH TO REMOVE ALL LAITANCE AND TO PRODUCE A ROUGHENED SURFACE FOR BONDING TO THE SLAB. ROUGHENED SURFACE SHALL HAVE AN AMPLITUDE OF APPROXIMATELY 1/4". CONCRETE FINS OR PROJECTIONS SHALL BE REMOVED TO PRODUCE A VERTICAL FACE AT THE EDGE OF THE BEAM.
6. NON-COMPOSITE DEAD LOAD DEFLECTION (ΔNC) AT THE MIDPOINT IS DUE TO THE WEIGHT OF THE SLAB AND COPING.
7. COMPOSITE DEAD LOAD DEFLECTION (ΔC) AT THE MIDPOINT IS DUE TO THE WEIGHT OF BARRIER.
8. STRANDS SHALL MEET ALL REQUIREMENTS OF ASTM A 416 GRADE 270.
9. PRESTRESSING DATA IS AS FOLLOWS:
   A. USE 12 - 1/2" DIAMETER SPECIAL LOW-RELAXATION (A = 0.167 SQ IN) STRANDS. PRETENSION STRANDS TO 33,818 LBS EACH.
   B. PRETENSIONED STRANDS SHALL BE RELEASED AFTER THE CONCRETE HAS REACHED A MINIMUM STRENGTH (f'_{ci}) OF 4,500 PSI.
   C. INCLUDING THE TOP STRANDS, THE TOTAL JACKING FORCE OF PRETENSIONING IS 405,816 LBS.
   D. INCLUDING THE TOP STRANDS, THE NET PRESTRESSING FORCE OF THE STRANDS AFTER ALL LOSSES IS 344,538 LBS.
10. CONCRETE STRENGTH (f'_c) = 5,000 PSI.
11. ALLOWABLE PSC BEAM TENSION = 424 PSI.

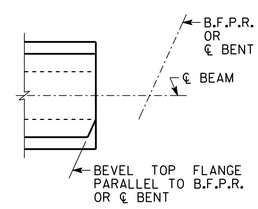

BEVEL DETAILS

REINFORCEMENT

ALL BAR DIMENSIONS ARE OUT TO OUT.

AT THE TOP OF THE BEAM, BARS 550 AND 551 SHALL BE FIELD BENT OR SHOP BENT 90°, SUCH THAT THE HORIZONTAL LEG EXTENDS BETWEEN TOP AND BOTTOM MATS OF SLAB REINFORCEMENT.

SLIGHTLY SHIFT OR SLOPE BARS 451 TO AVOID CONFLICT WITH STRANDS.

BARS 350 MAY BE FABRICATED IN TWO PARTS BY LAPPING HORIZONTAL SECTION BY 1'-0" MINIMUM.

PLACE BARS 452 WITH OPEN ENDS AWAY FROM BEAM ENDS.

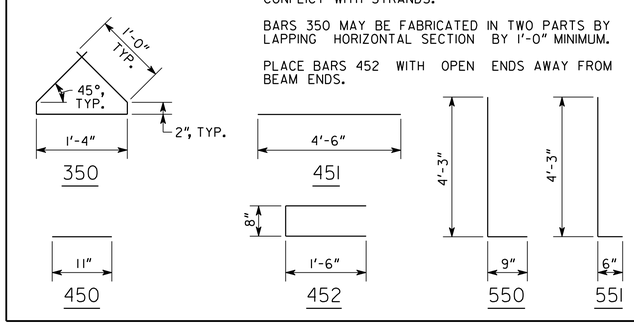

BRIDGE NO. 1 LEFT AND RIGHT

INFRASTRUCTURE CONSULTING & ENGINEERING

GEORGIA
DEPARTMENT OF TRANSPORTATION
OFFICE OF INNOVATIVE DELIVERY

TYPE I MOD. BEAM - SPAN 1 AND 5
S.R. 400 BRIDGES OVER BIG CREEK
FORSYTH COUNTY 0013367

SCALE: 1" = 20'-0" (UNLESS NOTED) AUGUST 2015

DRAWING NO. 35-0008	BY	REVISIONS	DATE
BRIDGE SHEET 8 OF 18			

DESIGNED	MDN	CHECKED	PWG	REVIEWED	DLC
DRAWN	RMH	LIAISON	DLC	APPROVED	WMD

1 INCH WHEN PRINTED FULL SIZE

RELEASED FOR CONSTRUCTION 01/19/2016

01/19/2016 11:01:00 AM
$$$$$$$$
$$$$$$$$
$$$$$$$$
$$$$$$$$