STATE	PROJECT NUMBER	SHEET NO.	TOTAL SHEETS
GA.	0012722		

ALTERNATE I

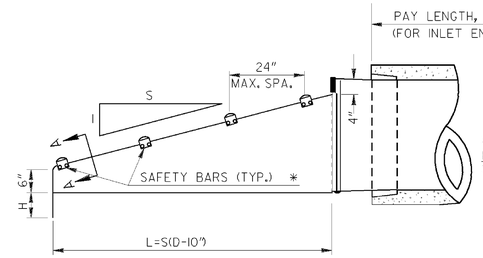

SIDE ELEVATION

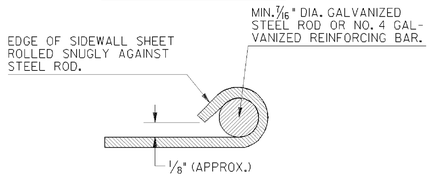

SECTION A-A

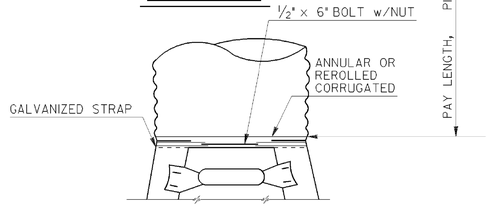

TYPE #1 CONNECTOR DETAIL

THRU 24"

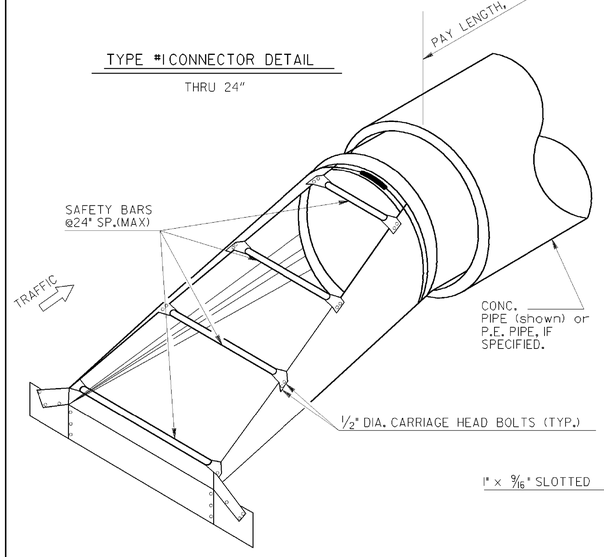

TYPICAL PICTORAL VIEW

(WITH CONCRETE PIPE)

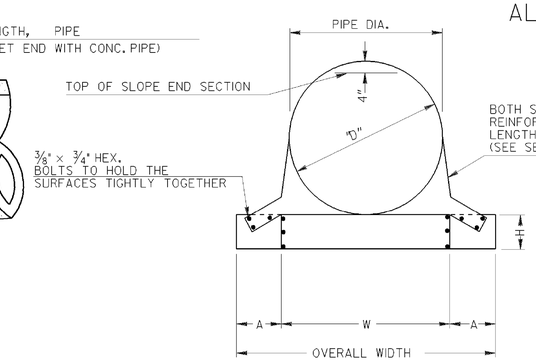

FRONT VIEW

NOTE:
Payment for Safety End Section Shall Include Tapered Sleeve.

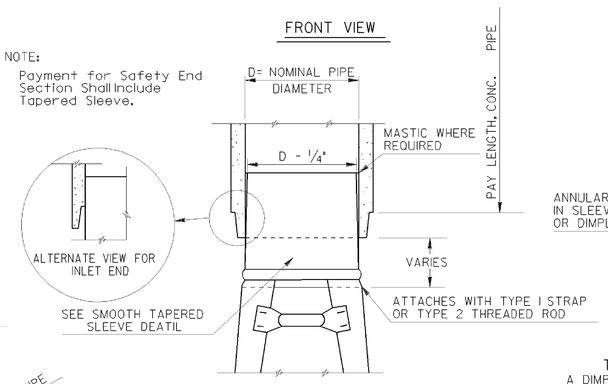

TAPERED SLEEVE FOR ATTACHING STEEL END SECTIONS TO SMOOTH PIPE

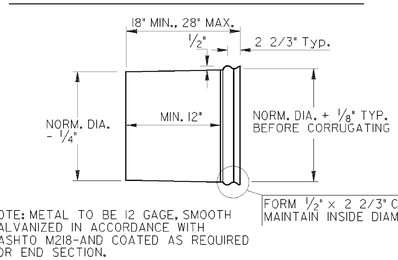

NOTE: METAL TO BE 12 GAGE, SMOOTH GALVANIZED IN ACCORDANCE WITH AASHTO M218-AND COATED AS REQUIRED FOR END SECTION.

TYPE 4 CONNECTOR SMOOTH TAPERED SLEEVE DETAIL

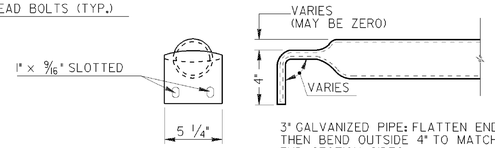

3" GALVANIZED PIPE: FLATTEN END, THEN BEND OUTSIDE 4" TO MATCH END SECTION SIDES.

TYPICAL DETAIL OF SAFETY BARS

* NUMBER OF BARS REQUIRED WILL VARY DEPENDING ON THE LENGTH OF THE END SECTION. SPACINGS BETWEEN CENTERS OF BARS SHALL NOT EXCEED 24 INCHES.

BOTH SIDES SHALL HAVE A REINFORCED EDGE FULL LENGTH OF END SECTION (SEE SECTION A-A)

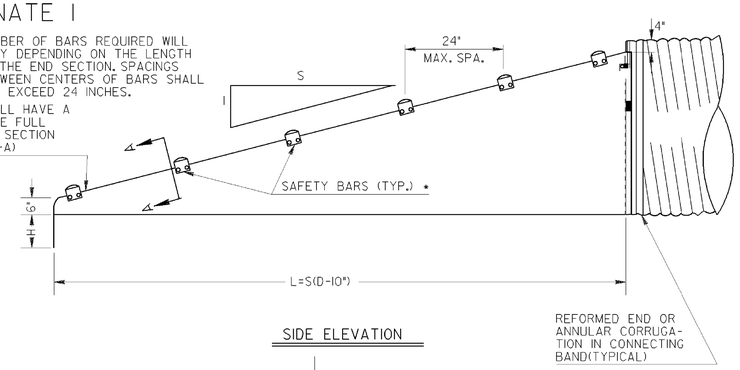

SIDE ELEVATION

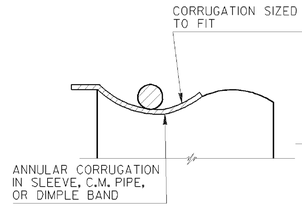

SECTION B-B

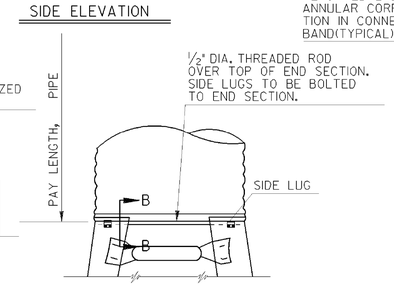

TYPE #2 CONNECTOR DETAILS

FOR 30" AND LARGER

TYPE 3 ALTERNATE CONNECTOR (NOT SHOWN)

A DIMPLE BAND COLLAR MAY BE SHOP BOLTED TO THE END SECTION

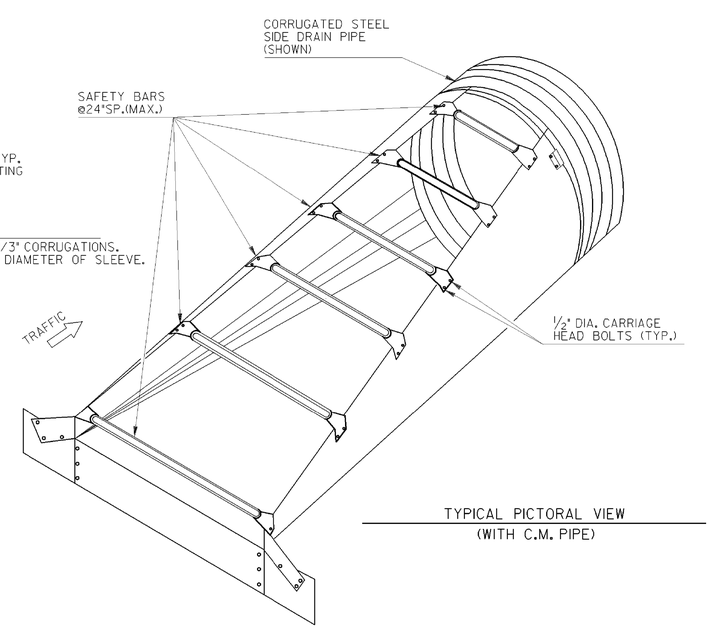

TYPICAL PICTORAL VIEW

(WITH C.M. PIPE)

GENERAL NOTES
ALTERNATE I

GALVANIZED STEEL SHEET

USE GALVANIZED STEEL SHEET CONFORMING TO AASHTO M 218.

CONNECTORS

PAYMENT FOR END SECTION SHALL INCLUDE CONNECTION OF THE TYPE REQUIRED FOR THE SIDE DRAIN USED.

SAFETY BARS

SHALL BE 3" SCHEDULE 40 GALVANIZED STEEL PIPE. PIPE TO BE GALVANIZED AFTER FORMING. SAFETY BAR(S) SHALL BE REQUIRED FOR ALL SAFETY END SECTIONS.

MISCELLANEOUS DETAILS

DETAILS OF CONSTRUCTION MATERIALS AND WORKMANSHIP NOT SHOWN ON THIS DRAWING SHALL CONFORM TO THE MANUFACTURER'S REQUIREMENTS, SUBJECT TO APPROVAL BY THE D.O.T.'S LABORATORY. A SAMPLE MUST BE SUBMITTED TO PRE-QUALIFY THE PRODUCT.

SIZES, DIMENSIONS, AND THICKNESSES

PIPE DIA. (IN.)	MIN. THICK.		DIMENSIONS (INCHES)				* L DIMENSION			
	IN.	GAGE	A	H	W (D+6")	OVERALL WIDTH	SLOPE (S:1)	LENGTH (IN.)	SLOPE (S:1)	LENGTH (IN.)
15	.064	16	8	6	21	37	4:1	20	6:1	30
18	.064	16	8	6	24	40	4:1	32	6:1	48
24	.064	16	8	6	30	43	4:1	56	6:1	84
30	.109	12	12	9	36	60	4:1	80	6:1	120
36	.109	12	12	9	42	66	4:1	104	6:1	156
42	.109	12	16	12	48	80	4:1	128	6:1	192
48	.109	12	16	12	54	86	4:1	152	6:1	228

*SEE STD. NO. 9031T FOR SLOPES AT SIDE ROAD OR AT DRIVES.

SPECIAL NOTE:

WHERE THE LENGTH OF DITCH OR THE DISTANCE BETWEEN TOE POINTS OF END SECTIONS ON SEPARATE INSTALLATIONS WOULD BE LESS THAN 30 FT., CONTINUED S.D. PIPE WITH AN INTERMEDIATE INLET OR OTHER ALTERNATE MAY BE SPECIFIED INSTEAD.

BY	REVISION	DATE
G.L.C.	REVISED GENERAL NOTES	1-28-05
R.M.U.	CONVERTED TO STANDARD PAY ITEM REVISION	12-14-94
R.M.U.	GEN. REVISION	11-18-94
R.M.U.	REFER TO STD. 9031-T	12-20-93

DRAWING No. 41-0010

DESIGNED ____
DRAWN ____
TRACED ____
CHECKED ____

(SUBMITTED) STATE ROAD & AIRPORT DESIGN ENGINEER
(APPROVED) CHIEF ENGINEER

DEPARTMENT OF TRANSPORTATION
STATE OF GEORGIA

STANDARD
SAFETY END SECTION
(METAL)
(FOR SIDE DRAIN PIPE-OR FOR STORM DRAIN PIPE PARALLEL TO MAINLINE)
ALTERNATE I

NO SCALE — SEPT., 1993

NUMBER 1122
SHEET 1 OF 3

0012722_41.dgn 5/9/2016 8:46:19 AM