STATE	PROJECT NUMBER	SHEET NO.	TOTAL SHEETS
GA.	0012722		

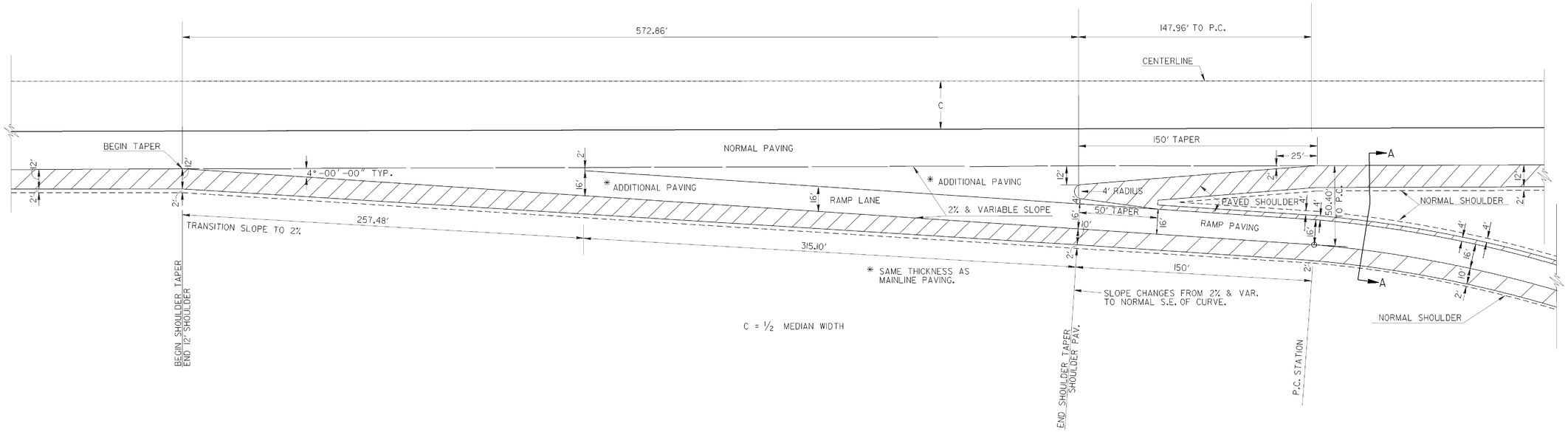

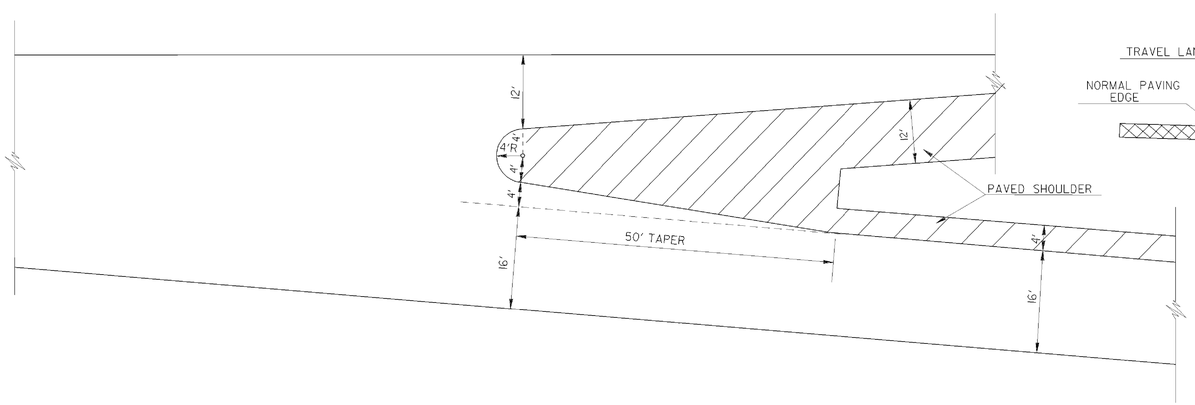

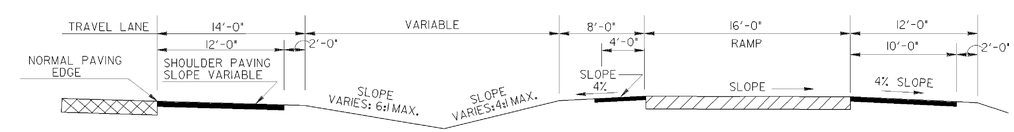

SECTION A-A

DATE	DEPARTMENT OF TRANSPORTATION STATE OF GEORGIA
REVISION	CONSTRUCTION DETAIL DETAIL OF EXIT RAMPS FOR INTERCHANGES NO SCALE — REDRAWN APRIL 2011
BY	NUMBER R-2

DRAWING No. 40-0009

0012722_40.dgn 5/9/2016 8:42:43 AM