STATE	PROJECT NUMBER	SHEET NO.	TOTAL SHEETS
GA.	0012722		

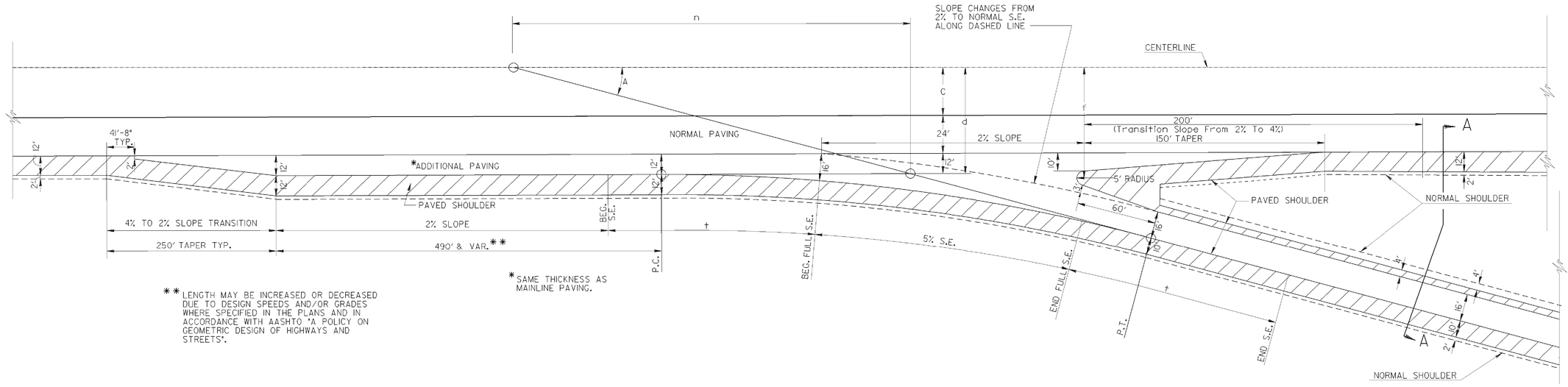

** LENGTH MAY BE INCREASED OR DECREASED DUE TO DESIGN SPEEDS AND/OR GRADES WHERE SPECIFIED IN THE PLANS AND IN ACCORDANCE WITH AASHTO "A POLICY ON GEOMETRIC DESIGN OF HIGHWAYS AND STREETS".

* SAME THICKNESS AS MAINLINE PAVING.

C = ½MEDIAN WIDTH
d = C+24'+12'
f = C+24'+15'
$n = \frac{d}{\text{Tan. A}}$
D = 5°-00' (For Diamond Interchanges)
S.E. = 5%
t = 125'

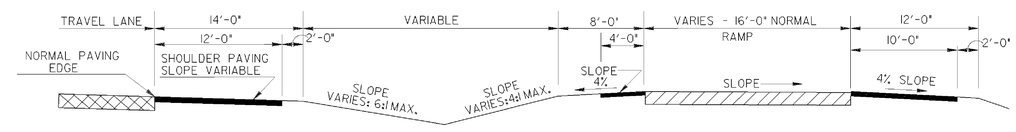

SECTION A-A

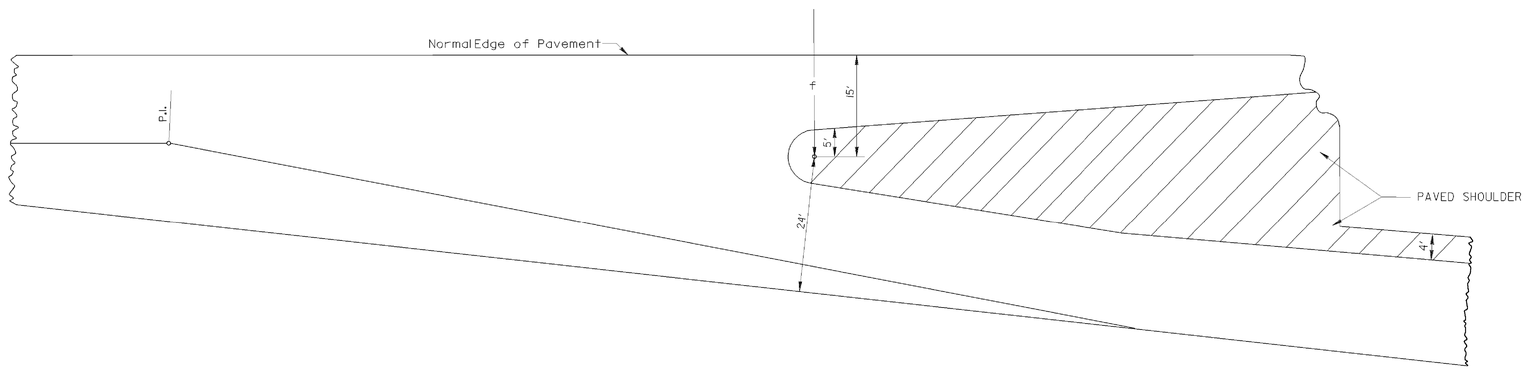

DATE	REVISION	BY

DEPARTMENT OF TRANSPORTATION
STATE OF GEORGIA

CONSTRUCTION DETAIL

DETAIL OF EXIT RAMPS FOR INTERCHANGES

NO SCALE — REDRAWN APRIL 2011

DRAWING No. 40-0008

NUMBER R-1

0012722_40.dgn 5/9/2016 8:42:39 AM