| STATE | PROJECT NUMBER | SHEET NO. | TOTAL SHEETS |
|---|---|---|---|
| GA. | 0012683 | 99 | 110 |

# PRECAST CONCRETE BARRIER DETAILS

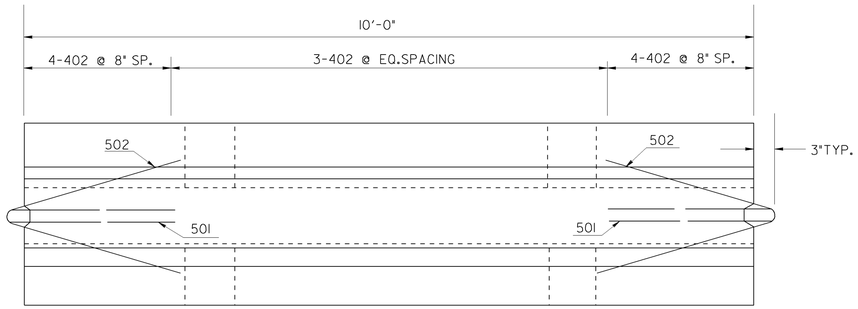


PLAN

NOTE:
BARRIER SECTIONS SHALL BE CONNECTED TOGETHER WITH THE 1¼" DIA. A-307 DOUBLE HEX CONNECTION BOLT. THE BOTTOM NUT & WASHER SHALL BE MAINTAINED BY THE CONTRACTOR FOR THE DURATION OF THE BARRIER INSTALLATION.

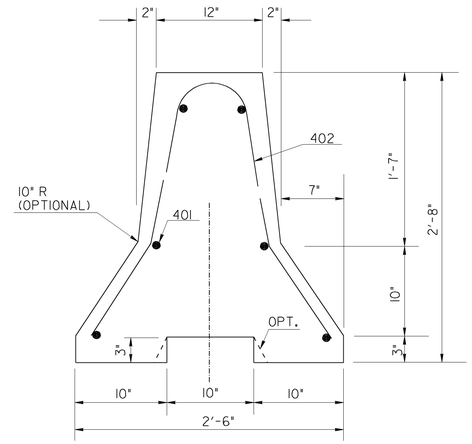


END ELEVATION

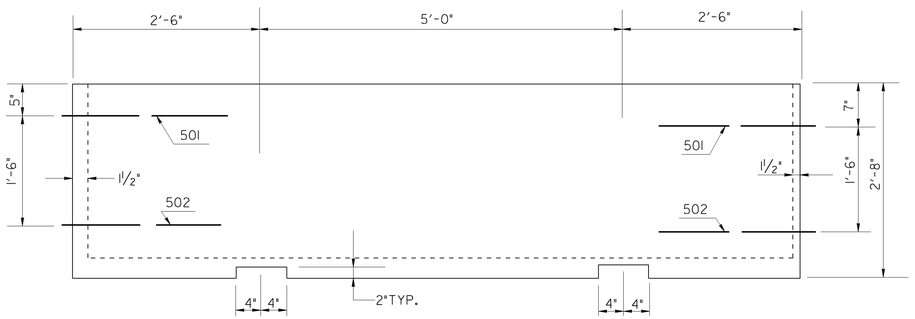


SIDE VIEW

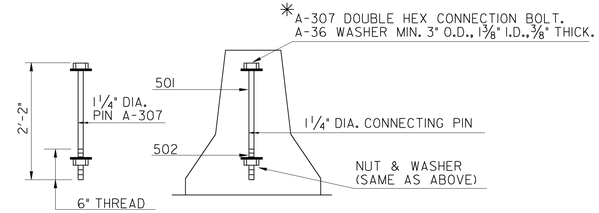


PIN CONNECTION

*AN ALTERNATE CONNECTING PIN WITH A FUSED NUT ON THE TOP THREADED PORTION AND NUT AND WASHER AS SPECIFIED ON THE BOTTOM MAY ALSO BE USED.

## GENERAL NOTES:

1-MATERIALS: CLASS 'A' CONCRETE AND 40 STEEL.

2-SEE GA. SPECIFICATIONS FOR BASIS OF PAYMENT AND METHOD NO.___.

3-REINFORCEMENT, HAVING AN AREA AT LEAST EQUAL TO REBARS SHOWN, MAY BE USED AS AN ALTERNATE.

4-BARRIERS SHALL BE PLACED SUCH THAT OPENINGS BETWEEN INDIVIDUAL SECTIONS SHALL BE KEPT TO A MAXIMUM.

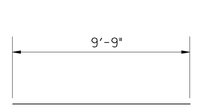


401

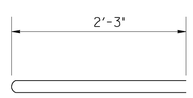


501

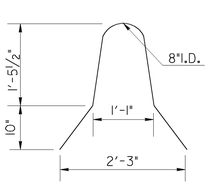


402

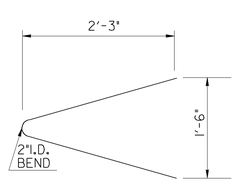


502

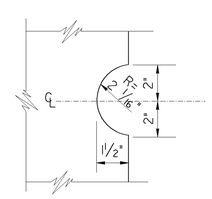


DAP DETAIL

RELEASED FOR CONSTRUCTION
2-19-2016

| | | | |
|---|---|---|---|
| 9-8-06 | REV. CONNECTION WASHER AND REV. GEN. NOTE NO. 4. | G.L.O. | |
| 5-2-01 | REV. REBAR & PIN CONN. | | |
| 5-10-96 | COTTER PIN REQUIREMENT | R.M.U. | BY |
| DATE | REVISION | | |

DEPARTMENT OF TRANSPORTATION
STATE OF GEORGIA

STANDARD
DETAILS OF PRECAST TEMPORARY BARRIERS

NO SCALE — AUG., 1995

DES. ____ DRW. ____ TRA. ____ CHK. ____

(SUBMITTED) STATE ROAD & AIRPORT DESIGN ENGR.
(APPROVED) CHIEF ENGINEER

NUMBER 4961