STATE	PROJECT NUMBER	SHEET NO.	TOTAL SHEETS
GA.	0012683	92	110

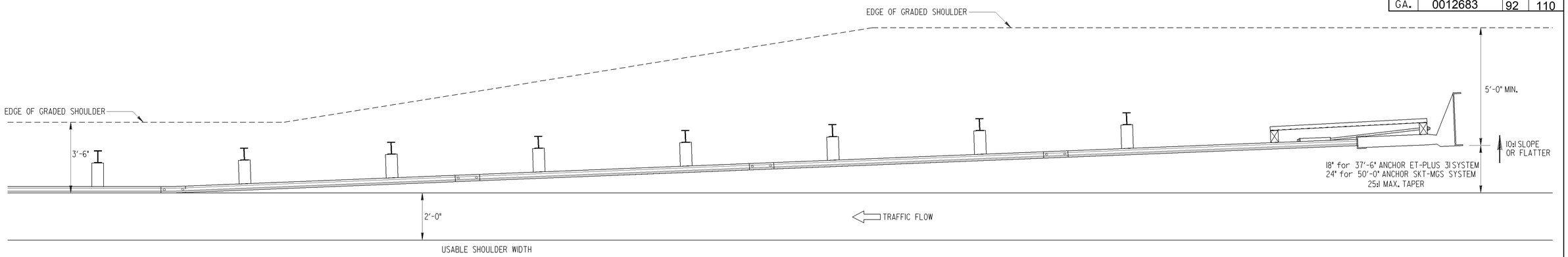

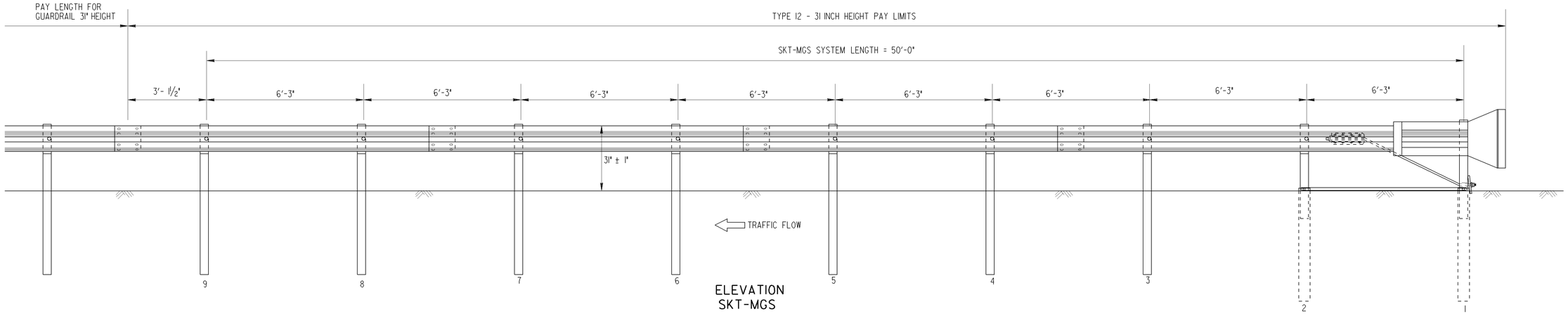

ELEVATION
SKT-MGS

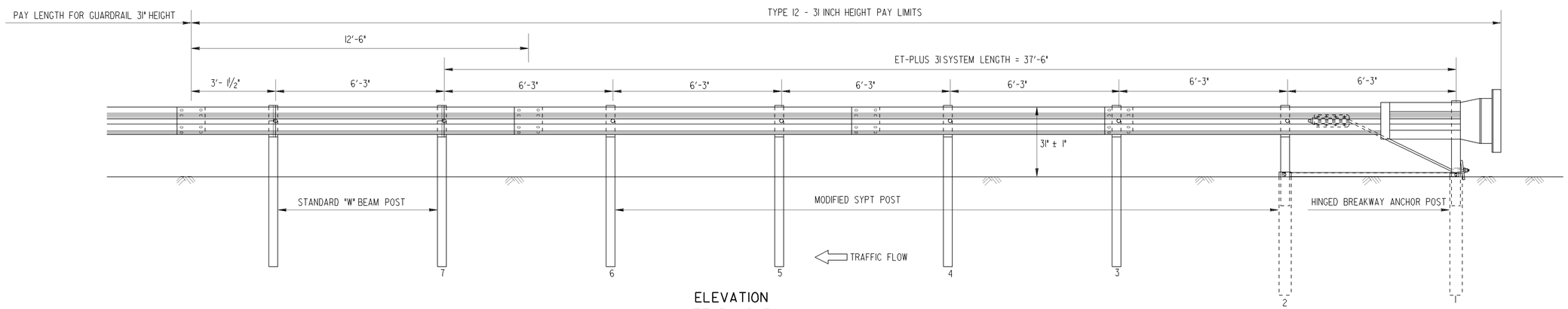

ELEVATION
ET-PLUS 31

GENERAL NOTES:

1. SPECIFICATIONS: GEORGIA STANDARD CURRENT EDITION, AND SUPPLEMENTS THERETO.
2. GUARDRAIL ANCHORAGE TYPE 12, 31INCH HEIGHT SHALL BE AN ET-PLUS 31 AS MANUFACTURED BY TRINITY INDUSTRIES, INC. OR AN SKT-MGS AS MANUFACTURED BY ROAD SYSTEMS, INC. AND SHALL BE INSTALLED ACCORDING TO MANUTACTURER'S RECOMMENDATIONS.
3. A MAXIMUM FLARE OF 25:1 OVER THE SYSTEM LENGTH OF THE TERMINAL IS REQUIRED FOR EITHER THE ET-PLUS 31 OR THE SKT-MGS.

RELEASED FOR CONSTRUCTION
2-19-2015

DATE
REVISION

DEPARTMENT OF TRANSPORTATION
STATE OF GEORGIA

STANDARD

TYPE 12
31 INCH GUARDRAIL HEIGHT

NO SCALE — AUGUST 2011

BY
DES. G.L.O. (SUBMITTED) STATE DESIGN POLICY ENGINEER
DRW. G.L.O.
CHK. B.R.E.
REVIEW B.A.S. (APPROVED) CHIEF ENGINEER

NUMBER
4384