STATE	PROJECT NUMBER	SHEET NO.	TOTAL SHEETS
GA.	0012683	84	110

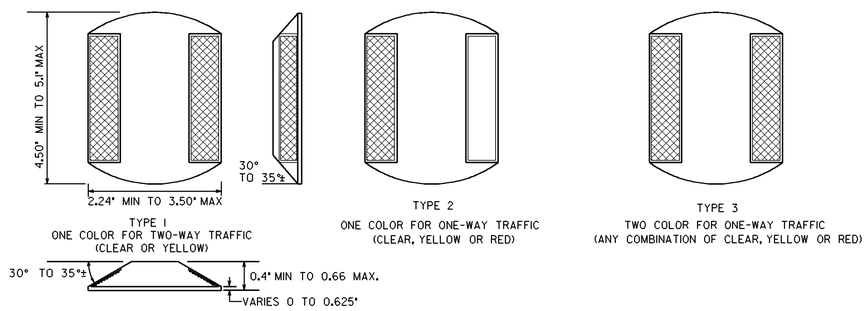

RAISED REFLECTIVE MARKERS

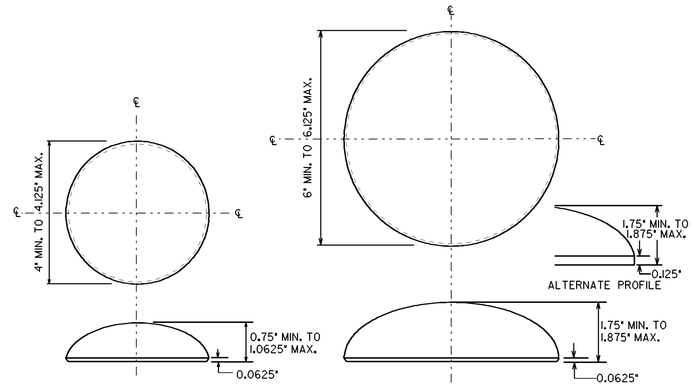

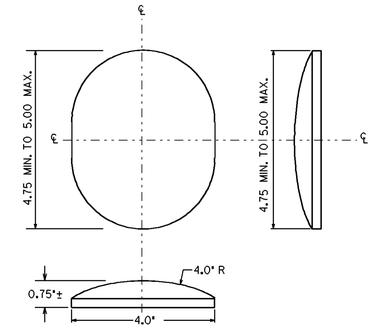

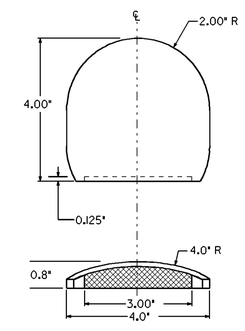

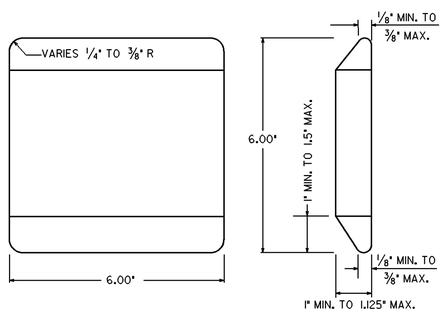

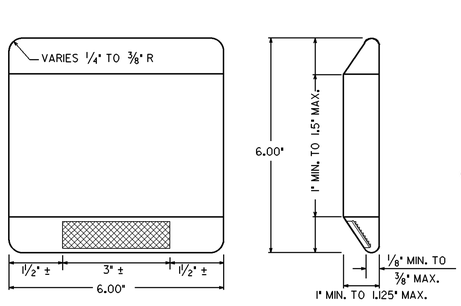

CERAMIC JIGGLE BAR MARKER

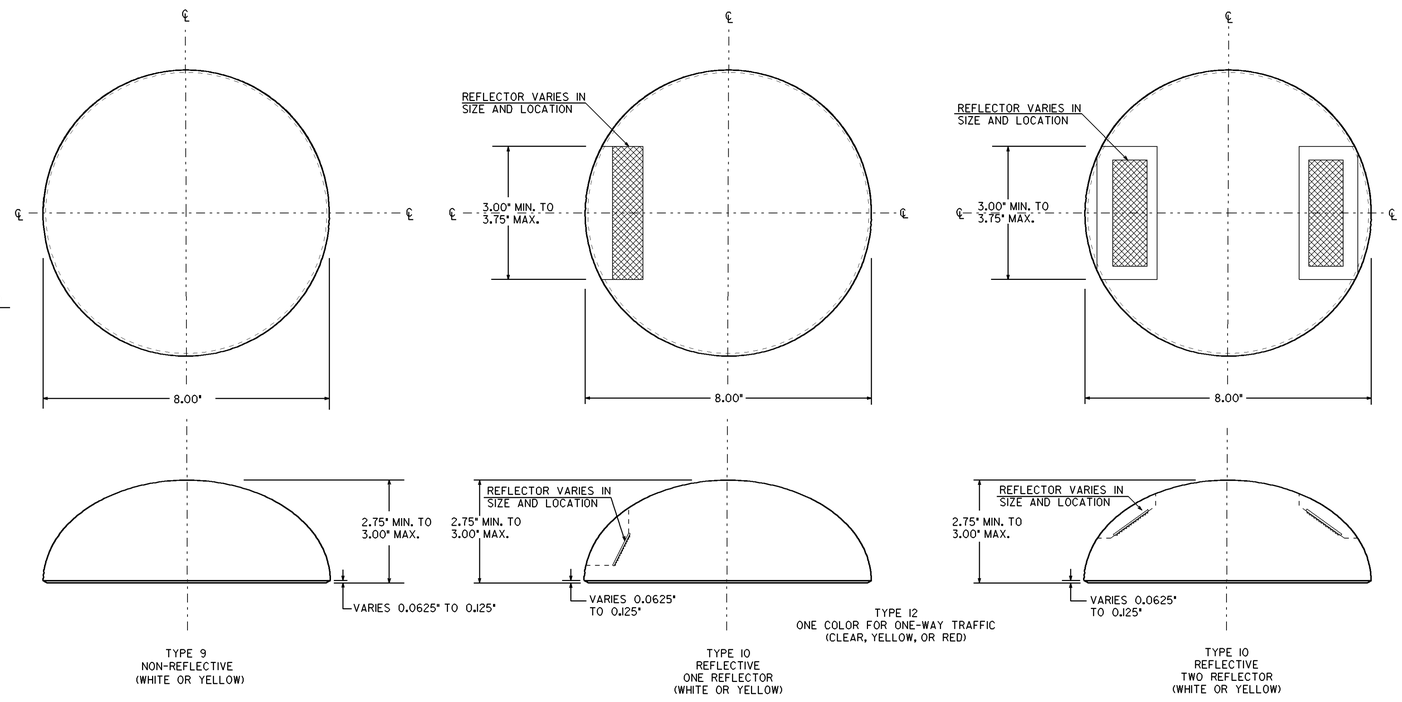

CERAMIC CHANNEL MARKER

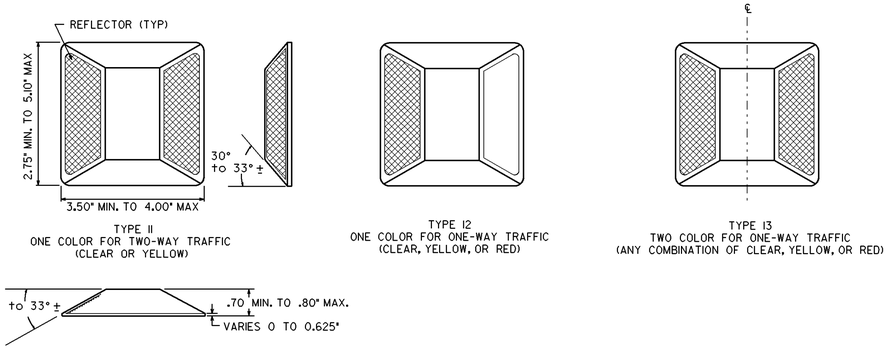

ALTERNATE RAISED REFLECTIVE MARKERS

GENERAL NOTES:

1. SPECIFICATIONS: GEORGIA STANDARD, CURRENT EDITION, AND SUPPLEMENTS THERE TO.
2. THE CONTRACTOR SHALL USE RAISED PAVEMNT MAKER SOURCES AS LISTED IN OPL 76.
3. COLORS FOR REFLECTIVE ELEMENTS SHALL BE EITHER CLEAR, YELLOW, OR RED AS SPECIFIED.
4. THE SHELL OF THE REFLECTIVE MARKERS SHALL BE OF ONE COLOR OR OF A COMBINATION OF TWO COLORS, WHICH SHALL BE THE SAME AS THE REFLECTIVE ELEMENT.
5. THE SURFACE OF OPAQUE CERAMIC MARKERS SHALL BE GLAZED AND OF THE COLOR SPECIFIED IN THE PLANS WITH A WHITE, VITREOUS, CERAMIC BASE.
6. COLORS FOR ALL RAISED PAVEMENT MARKERS SHALL BE AS SPECIFIED IN THE PLANS.

RELEASED FOR CONSTRUCTION
2-19-2016

DATE	REVISIONS
9-22-11	REV. DIMENSIONS, ADDED
	NOTES TO MARKERS
	AND REV. GEN. NOTES.

GEORGIA DEPARTMENT OF TRANSPORTATION
OFFICE OF TRAFFIC SAFETY & DESIGN

DETAILS OF
RAISED PAVEMENT MARKERS

NO SCALE JANUARY 2000

PCPRSM

PCBDTB

T-15C