PLAN VIEW

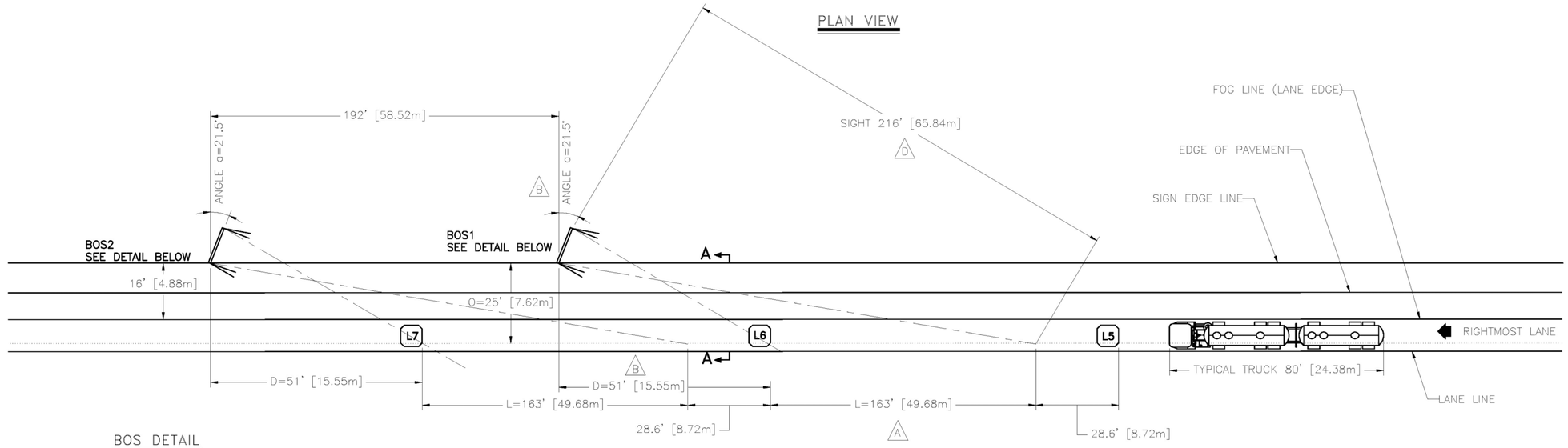

BOS DETAIL

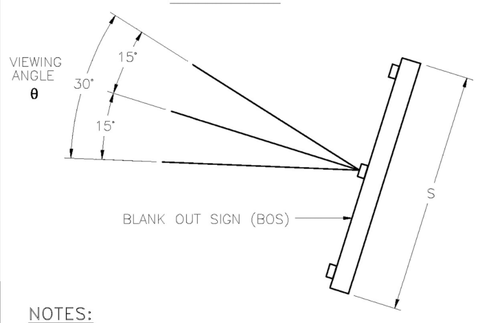

MESSAGE 1

TRUCK MUST ENTER WEIGH STATION

MESSAGE 2
(BYPASS MESSAGE WITH STRAIGHT ARROW)

TRUCK BYPASS WEIGH STATION

SECTION A–A

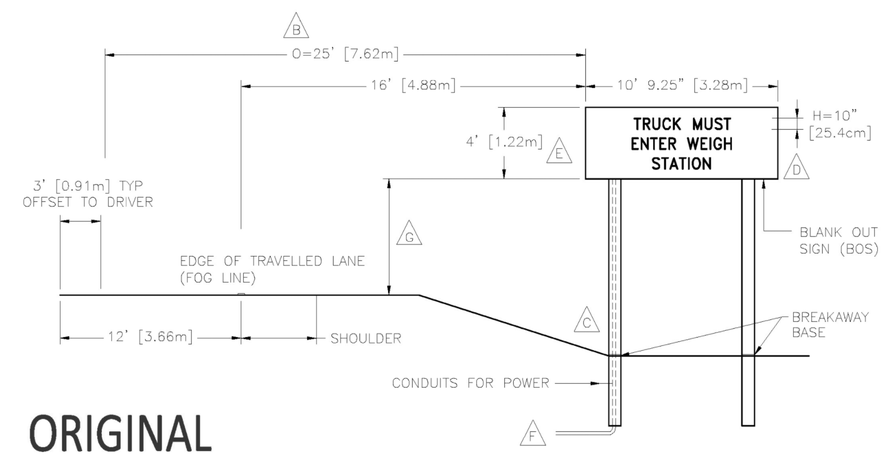

NOTES:

A. DISTANCE L CONTROLLED BY TRUCK SPEED AND NUMBER OF SIGNS.

B. DISTANCE D AND ANGLE α CONTROLLED BY DESIRED OFFSET FROM ROAD (O), SIGN DIMENSIONS (S, H), AND VIEWING ANGLE ( )θ

C. SIGN WILL BE INSTALLED WITH BREAKAWAY BASES.

D. SIGHT DISTANCE IS LIMITED BY TEXT HEIGHT H

E. SIGN MESSAGE(S) IN ACCORDANCE WITH LOCAL REGULATIONS.

F. SIGN, CONDUIT AND WIRING IN ACCORDANCE WITH LOCAL ELECTRICAL CODE.

G. MOUNT SIGN IN ACCORDANCE WITH LOCAL MINIMUM CLEARANCE (HEIGHT) REQUIREMENTS.

H. TO CALCULATE DIMENSIONS, USE 3EGR0016–CVO SIGN CALCULATOR.

ORIGINAL

REV.	DESCRIPTION	DWN/DSN	APPR.	APPR.	DATE
A	PREVIOUSLY PRE-RELEASED AS REV 3. ECO-7860	LPe/PFe	BKI	LEI	Jun 2/15

CONFIDENTIAL

THIS DOCUMENT CONTAINS INFORMATION PROPRIETARY TO IRD AND IS THEREFORE NOT TO BE DISCLOSED TO OTHERS OR USED FOR PRODUCTION WITHOUT WRITTEN PERMISSION FROM INTERNATIONAL ROAD DYNAMICS INC.

NOT TO SCALE

SIZE: B

DIMENSIONS IN: FEET [m]

INTERNATIONAL ROAD DYNAMICS INC.
SASKATOON SASKATCHEWAN CANADA

DWG. TITLE:
2 LANE MAINLINE SIGN LAYOUT
ITS TYPICAL DETAILS
GEORGIA STATEWIDE WEIGH IN MOTION

DWG. No. C11668005 REV.: A

CAD FILE: C11668005.DWG SHEET 1 OF 1

BBH Brooks-Berry-Haynie

ATKINS

GEORGIA
DEPARTMENT OF TRANSPORTATION

RELEASED FOR CONSTRUCTION 2-19-2016

REVISION DATES

STATE OF GEORGIA
DEPARTMENT OF TRANSPORTATION
OFFICE: INNOVATIVE PROGRAM DELIVERY

CONSTRUCTION DETAILS
WEIGH IN MOTION- PHASE C

DRAWING No. 40-006