STATE	PROJECT NUMBER	SHEET NO.	TOTAL SHEETS
GA.	0011692	66	103

31 INCH HEIGH GUARDRAIL CONNECTION AT TRAILING ENDS

(SEE NOTE AT BOTTOM LEFT)

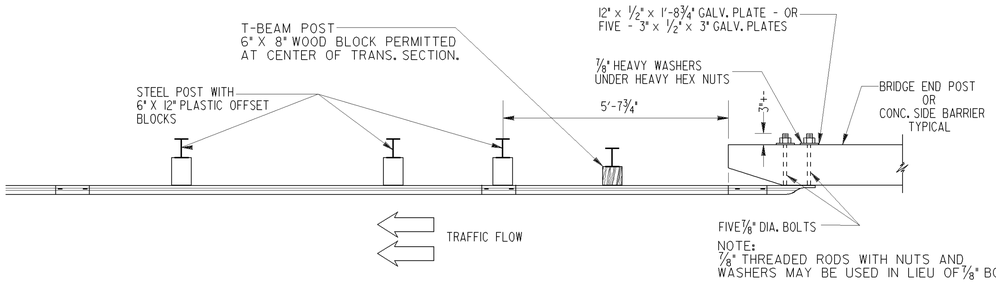

NOTE:
7/8" THREADED RODS WITH NUTS AND WASHERS MAY BE USED IN LIEU OF 7/8" BOLTS.

PLAN

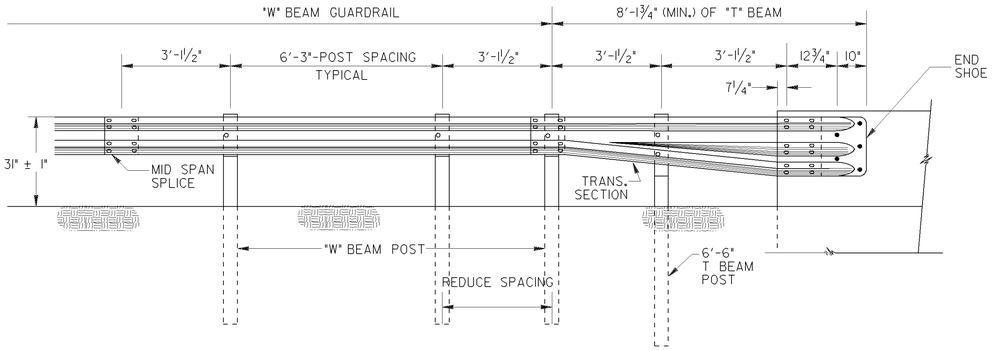

ELEVATION

NOTE:
DETAILS AT TOP LEFT ARE APPLICABLE FOR CONNECTIONS AT THE TRAILING ENDS OF ONE-WAY TRAFFIC OR AT THE TRAILING END OF MULTI-LANE (4 OR MORE) FACILITIES.

NOTE:
DETAILS AT TOP RIGHT ARE APPLICABLE FOR CONNECTIONS AT THE APPROACH ENDS OF BRIDGES OR CONCRETE SIDE BARRIERS OR AT ALL FOUR ENDS FOR TWO-LANE, TWO WAY TRAFFIC.

GUARDRAIL CONNECTION AT BRIDGE END (OR CONCRETE BARRIER)

(DETAILS ARE ILLUSTRATED WITH APPROACH SLAB, SPILLWAY, ETC. FOR TYPICAL BRIDGE END, POST SPACINGS AND END SHOE CONNECTION APPLIES TO ROADWAY CONCRETE BARRIER AS WELL AS BRIDGE ENDS.)

NOTE:
7/8" THREADED RODS WITH NUTS AND WASHERS MAY BE USED IN LIEU OF 7/8" BOLTS.

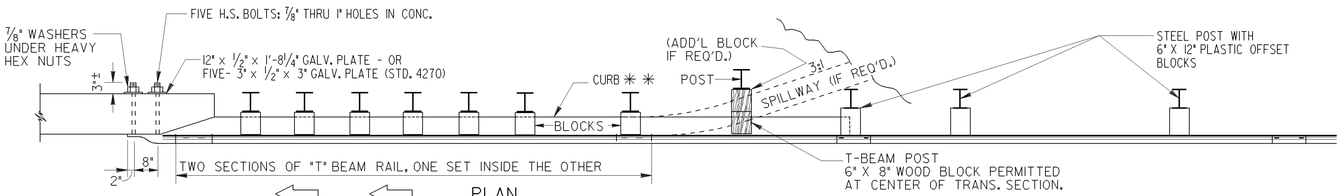

PLAN

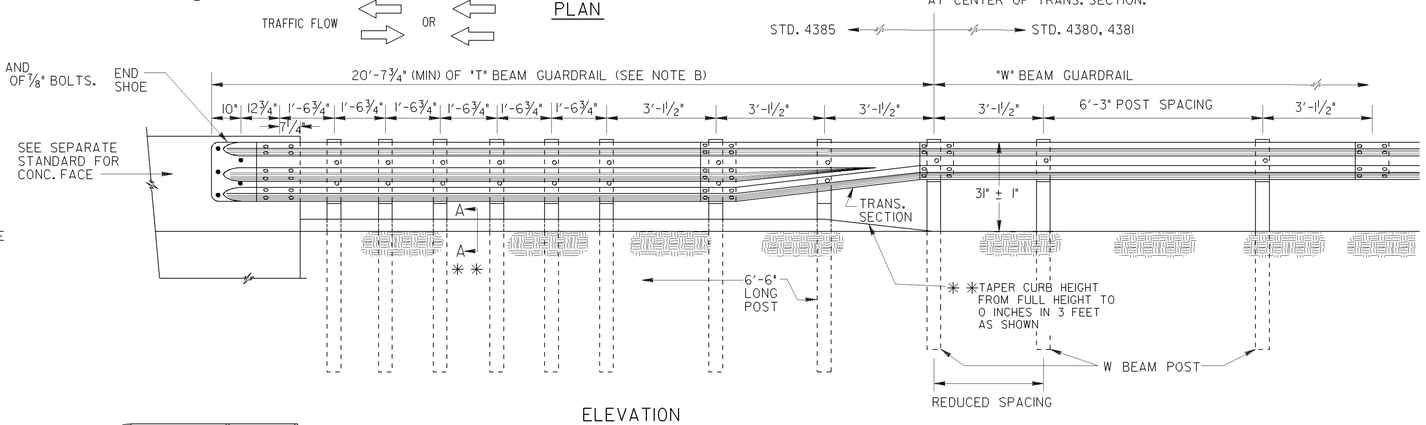

ELEVATION

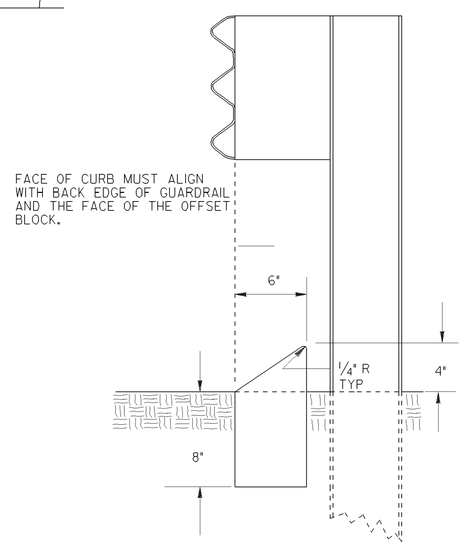

SECTION A-A * *

NOTES FOR GUARDRAIL CONNECTION:

A. WHERE GREATER THAN THE MINIMUM LENGTH OF T-BEAM GUARDRAIL IS REQUIRED ADDITIONAL POST REMAIN AS SHOWN WITHIN THE FIRST 20'-7 3/4" LENGTH, WITH NORMAL (6'-3" C. TO C.) SPACINGS FOR THE REMAINDER OF THE INSTALLATION (STD. 4385) UNLESS SPECIFIED OTHERWISE.

B. PAYMENT FOR GUARDRAIL TYPE T INCLUDES ALL ADDITIONAL POST, ALL ADDITIONAL OFFSET BLOCKS, THE SPECIAL END SHOE CONNECTION WITH ACCOMPANY HARDWARE, THE EXTRA SECTION OF "T" BEAM RAIL NESTED INSIDE THE OTHER, AND THE "T" BEAM TO "W" BEAM TRANSITION SECTION.

C. WHERE GUARDRAIL POST ARE ERECTED THRU SPILLWAY, CONCRETE CAP OR PAVING UNDER GUARDRAIL, PAYMENT FOR GUARDRAIL, OF ANY TYPE SHALL INCLUDE REPLACING THE BLOCKED OUT CONCRETE AND/OR REMOVING AND REPLACING PORTIONS OF SPILLWAY, CONCRETE, OR GROUT AS NECESSARY FOR POST INSTALLATIONS.

* * FOR CURB DETAILS ASSOCIATED WITH APPROACH SLAB, SEE APPROACH SLAB STANDARD. FOR GUARDRAIL INSTALLATION LOCATIONS WHERE AN APPROACH SLAB IS NOT USED, PROVIDE A CONCRETE CURB IN ACCORDANCE WITH SECTION "A-A". CONCRETE CURB SHALL BE PAID FOR PER LINEAR FOOT.

NOTE: POST SPACINGS SHOWN ARE TYPICAL AVERAGE WITH NORMAL CONSTRUCTION TOLERANCES ALLOWED.

GENERAL NOTES:

1. SPECIFICATIONS: GEORGIA STANDARD, CURRENT EDITION & SUPPLEMENTS THERETO.
2. FOR DETAILS OF GUARDRAIL HARDWARE, POST, OFFSET BLOCKS, END SHOE, TRANSITION SECTION, ETC., SEE SEPARATE STANDARDS AS APPLICABLE.
3. GUARDRAIL INSTALLATIONS, INCLUDING ANCHORAGES AND CONNECTIONS, ARE TO BE COMPLETED BEFORE BEING SUBJECT TO TRAFFIC UNLESS OTHERWISE APPROVED.
4. OFFSET BLOCKS SHALL BE PLASTIC UNLESS SPECIFIED OTHERWISE. OFFSET BLOCKS ARE REQUIRED AT ALL POSTS.
5. THE COST FOR DRILLING HOLES FOR THE END SHOE CONNECTION SHALL BE INCLUDED IN THE UNIT BID PRICE FOR THE GUARDRAIL.

DATE | REVISION | BY

DEPARTMENT OF TRANSPORTATION
STATE OF GEORGIA

STANDARD

GUARDRAIL CONNECTION AT BRIDGE END OR AT CONCRETE BARRIER END FOR 31 INCH HIGH GUARDRAIL

NO SCALE — AUGUST 2011

DES. G.L.O. (SUBMITTED) STATE DESIGN POLICY ENGINEER
DRW. G.L.O.
CHK. B.R.E.
REVIEW B.A.S. (APPROVED) CHIEF ENGINEER

NUMBER 4382