7/6/2004 2:23:51 PM \\GDOT-DSN1\GOPLOT\GCF\GO_TIFF_OUTPUT.GCF GOWENS M:\GARY\ENGLISH STANDARDS UPDATED AND UPDATED INDEX\1401.PRF GO-RD6

STATE	PROJECT NUMBER	SHEET NO.	TOTAL SHEETS
GA.	0011692	61	103

STORM DRAIN AND UTILITY INSTALLATION BY OPEN CUT - GENERAL

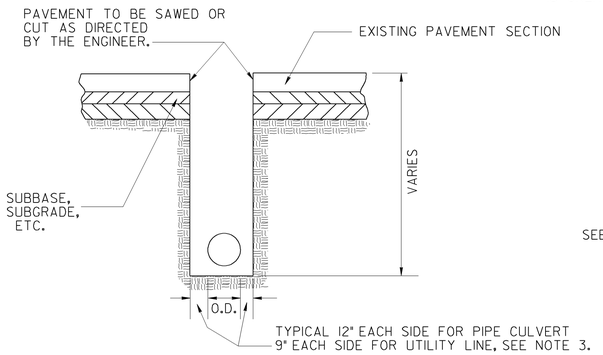

STAGE 1

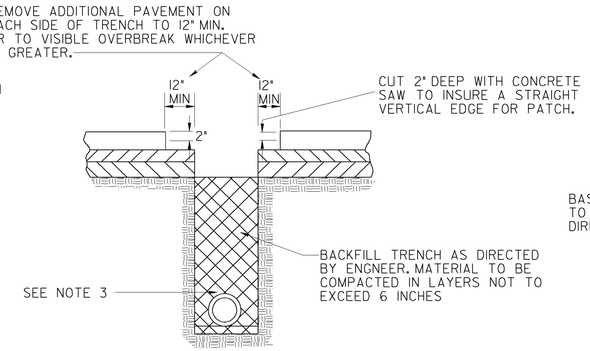

STAGE 2

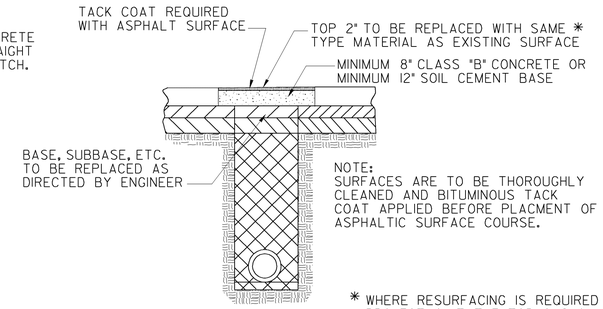

NOTE:
SURFACES ARE TO BE THOROUGHLY CLEANED AND BITUMINOUS TACK COAT APPLIED BEFORE PLACMENT OF ASPHALTIC SURFACE COURSE.

* WHERE RESURFACING IS REQUIRED ON THE PROJECT OMIT THE TOP 2" SHOWN ABOVE. GRADE CONCRETE PATCH SURFACE SAME AS EXISTING SURFACE, WITH THE RESURFACING OVERLAY BEING STAGE 4.

STAGE 3

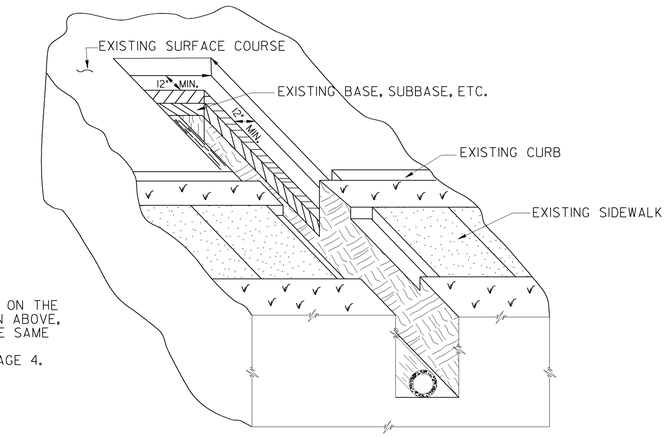

STORM DRAIN AND UTILITY INSTALLATION BY OPEN CUT ACROSS P.C. CONCRETE PAVING

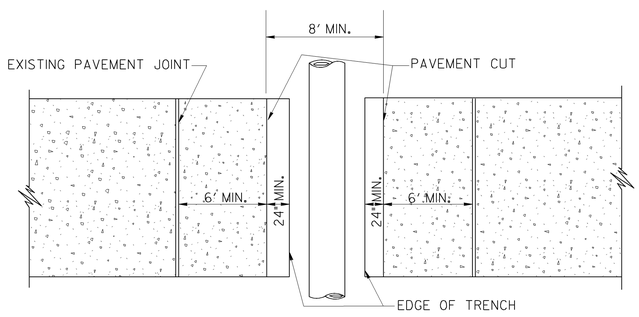

NORMAL CROSSING

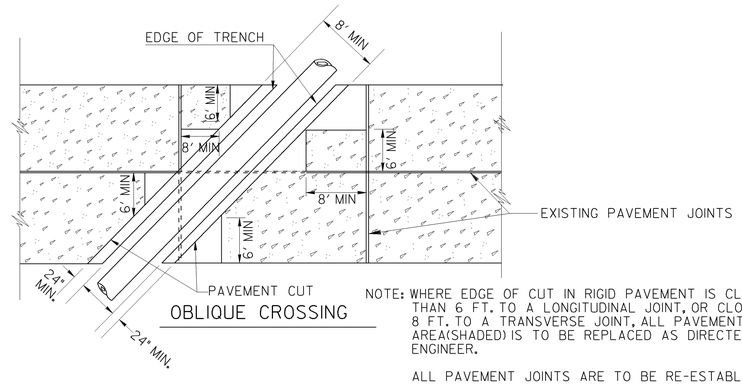

OBLIQUE CROSSING

NOTE: WHERE EDGE OF CUT IN RIGID PAVEMENT IS CLOSER THAN 6 FT. TO A LONGITUDINAL JOINT, OR CLOSER THAN 8 FT. TO A TRANSVERSE JOINT, ALL PAVEMENT IN THAT AREA(SHADED) IS TO BE REPLACED AS DIRECTED BY THE ENGINEER.

ALL PAVEMENT JOINTS ARE TO BE RE-ESTABLISHED.

DOWELS AND TIE-BARS ARE TO BE REPLACED.

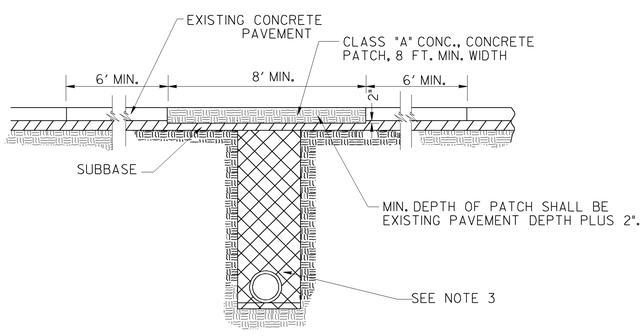

NOTE:
WHEN THE CONCRETE IS POURED, IT SHALL BE STRUCK OFF AT AN ELEVATION SLIGHTLY HIGHER THAN THE INTENDED SURFACE AND TAMPED TO OFFSET SHRINKAGE. MECHANICAL VIBRATING EQUIPMENT SHALL BE USED TO CONSOLIDATE THE PLACED CONCRETE, ESPECIALLY AT THE EDGES AND AROUND THE STEEL AT JOINTS. THE CONCRETE SHALL THEN BE TAMPED A SECOND TIME, THEN SCREEDED AND CHECKED WITH A STRAIGHT EDGE TO GIVE THE SAME SURFACE GRADE AS THE EXISTING PAVMENT.

GENERAL NOTES:

1. SPECIFICATIONS: GEORGIA STANDARD, CURRENT EDITION & SUPPLEMENTS THERETO.

2. (a)OTHER PAVEMENT REPLACEMENT MATERIALS, SUCH AS HIGH EARLY STRENGTH CONCRETE, MAY BE SUBSTITUTED FOR MATERIALS SHOWN WHEN CALLED FOR IN THE PLANS OR BY THE ENGINEER.
   (b)PAYMENT FOR PIPE CULVERT OR UTILITY SHALL INCLUDE SAWING AND/OR CUTTING AND REMOVING EXISTING PAVEMENT AND REPLACING THE PAVEMENT AS SPECIFIED. PAYMENT FOR PIPE OR UTILITY INCLUDES THIS PAVEMENT REPLACEMENT MATERIAL. REGARDLESS OF WHERE MATERIALS SHOWN ARE USED OR WHERE OTHER MATERIALS SUCH AS HIGH EARLY STRENGTH CONCRETE ARE USED.
   (c)PAYMENT FOR PIPE CULVERT OR UTILITY INSTALLATION SHALL INCLUDE REPLACING IN KIND ANY PORTIONS OF SIDEWALK, CURB, CURB & GUTTER, MEDIAN PAVING, DRIVEWAYS, ETC., WHICH ARE DISTURBED DUE TO THE INSTALLATION.

3. TRENCH DETAIL SHOWN IS GENERAL, SEE STANDARD 1030D FOR DETAILS REQUIRED FOR PIPE CULVERT INSTALLATIONS. SEE THE UTILITIES MANUAL FOR UTILITY INSTALLATION REQUIREMENTS.

4. AFTER REMOVING EXISTING PAVEMENT, THE SUBBASE AND VERTICAL FACE OF EXISTING PAVING SHALL BE DAMPED (BUT NOT WET), ADDITIONALLY, THE VERTICAL FACE OF THE EXISTING PAVEMENT SHALL BE PAINTED WITH A SOLUTION OF PORTLAND CEMENT AND WATER MIXED TO THE CONSISTENCY OF HEAVY PAINT. THE CONCRETE MIX SHALL THEN BE POURED BEFORE THIS SURFACE DRIES OUT. AFTER CONCRETE IS POURED, IT SHALL BE WORKED INTO ALL CORNERS AND INTO ALL ROUGH SURFACES OF THE EXISTING PAVEMENT.

5. WHERE PIPE IS REMOVED, BUT NOT REPLACED, PAYMENT FOR PIPE REMOVAL INCLUDES ALL ITEMS DESCRIBED IN GENERAL NOTE 2., WITH ALL OTHER NOTES AND DETAILS ALSO BEING APPLICABLE.

NOTE:
THIS STANDARD IS FOR USE WHERE PERMANENT PAVEMENT PATCHING IS REQUIRED. TEMPORARY PATCHING, IF REQUIRED, SHALL BE ACCORDING TO OTHER DETAILS, SPECIFICATIONS, AND/OR AS DIRECTED BY THE ENGINEER.

			DATE	DEPARTMENT OF TRANSPORTATION STATE OF GEORGIA
			REVISION	STANDARD PAVEMENT PATCHING DETAILS (STORM DRAIN OR UTILITY INSTALLATIONS BY OPEN CUT ACROSS EXISTING PAVEMENT) NO SCALE — REV. & REDR., AUG. 1999
			BY	REV. ____ TRA. ____ CHK. ____ (SUBMITTED) STATE ROAD & AIRPORT DESIGN ENGR. (APPROVED) CHIEF ENGINEER
				NUMBER 1401

7/6/2004 2:23:51 PM \\GDOT-DSN1\GOPLOT\GCF\GO_TIFF_OUTPUT.GCF GOWENS M:\GARY\ENGLISH STANDARDS UPDATED AND UPDATED INDEX\1401.PRF