STATE	PROJECT NUMBER	SHEET NO.	TOTAL SHEETS
GA.	M004780	60	65

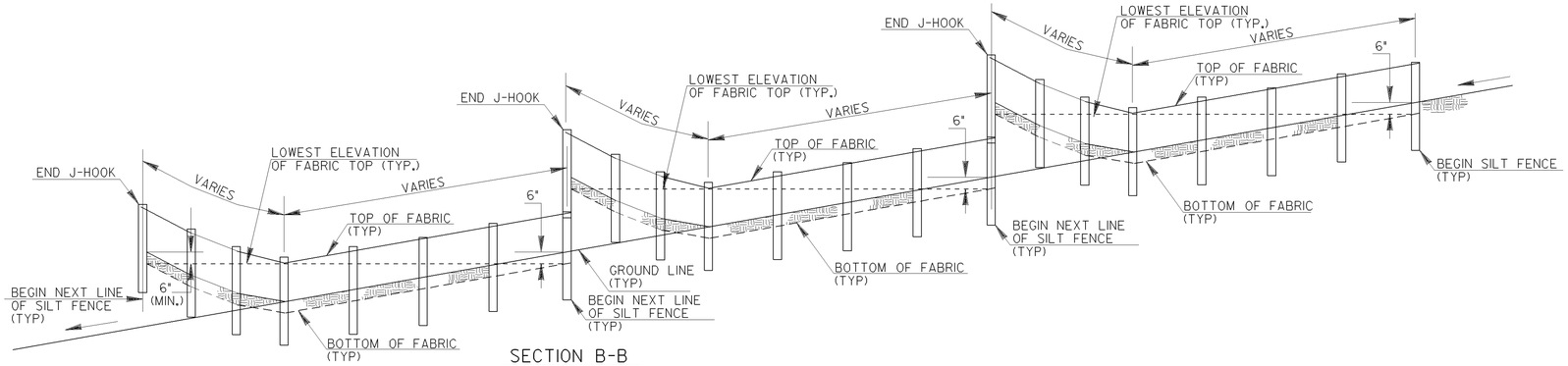

SECTION B-B

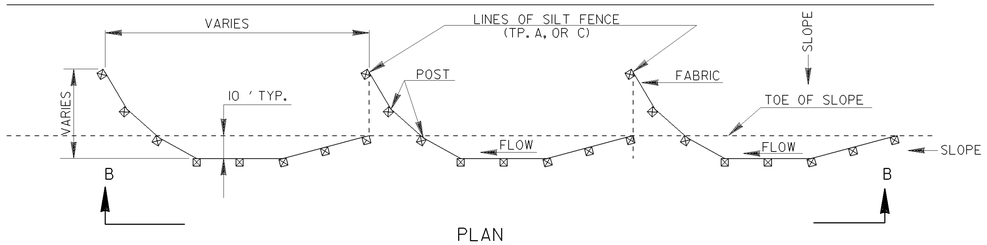

PLAN

SINGLE ROW SILT FENCE

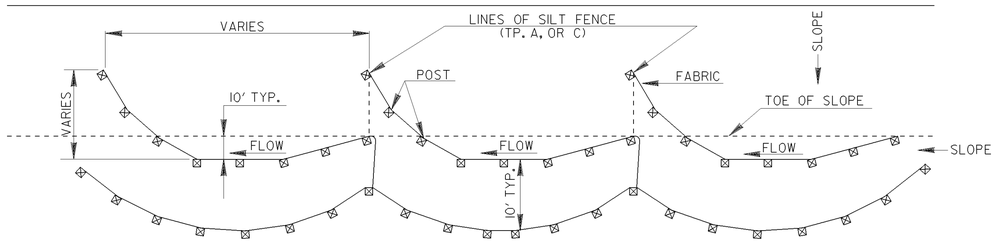

PLAN

DOUBLE ROW SILT FENCE

TYPICAL J HOOK SPACING		
SLOPE PERCENT	TYPE OF SILT FENCE	MINIMUM SPACING (FEET)
1% TO 2%	TYPE A	100' ±
2% TO 3%	TYPE A	50' ±
3% TO 4%	TYPE C	50' ±
4% TO 5%	TYPE C	25' ±

NOTE:

1. IF THE GRADE IS BETWEEN 0 TO 1 PERCENT, THE SILT FENCE SHALL BE PLACED ACROSS THE DITCH.
2. TEMPORARY SILT FENCE SHALL NOT BE PLACED WITHIN STATE WATERS.

TYPICAL LOCATION AROUND DROP INLETS

ALT. TO PREFABRICATED INLET SEDIMENT TRAP FOR AREAS WITH SLOPES ≤ 5%

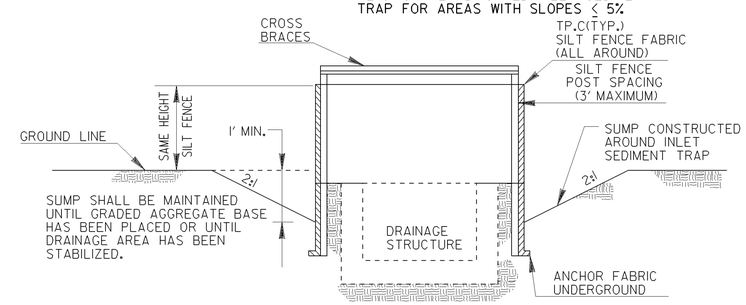

ELEVATION

✳ CROSS BRACING REQUIRED WHEN USING "ALTERNATE" TYPE C PRODUCTS WHICH USE WOOD POSTS.

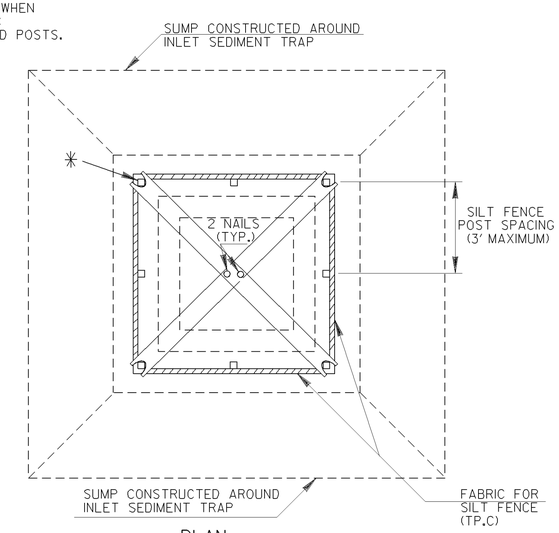

PLAN

CROSS BRACES:

TWO - 2 X 4's WITH ENDS TO FIT POST, PROVIDING STURDY SUPPORT, OR AN APPROVED ALTERNATE

NOTE:
PAYMENT AS INLET SEDIMENT TRAP PER EACH.

NOTE:
SEE SEPARATE SHEET ENTITLED "TEMPORARY SILT FENCE DETAILS" FOR SILT FENCE ERECTION DETAILS.

NOTE:
THE DRAINAGE AREA ENTERING THE INLET SEDIMENT TRAP SHALL BE NO GREATER THAN ONE ACRE.

TYPICAL CONSTRUCTION SEQUENCE FOR INLET SEDIMENT TRAP ALTERNATE

1. EXCAVATE APPROXIMATELY 4" TO 6" BELOW THE TOP OF THE INLET STRUCTURE.
2. PLACE THE FRAME ONTO THE INLET STRUCTURE, ENSURING PROPER SEATING OF FRAME TO STRUCTURE.
3. SLIDE THE FILTER OVER THE FRAME.
4. FILL THE FILTER POCKETS WITH SOIL, #57 GRAVEL OR EQUIVALENT. THE FILTER POCKETS SHOULD BE COMPLETELY FILLED TO ENSURE A GOOD SEAL BETWEEN THE GROUND AND INLET STRUCTURE.
5. BACK FILL AROUND THE FRAME AND FILTER ASSEMBLY IS NOT REQUIRED TO COMPLETE INSTALLATION; HOWEVER, BACK FILLING MAY BE NECESSARY TO COMPLETE EXCAVATION REQUIREMENTS FOR THE SITE.

NOTE:
INLET SEDIMENT TRAP ALTERNATE SHALL BE AS APPROVED BY THE GA. D.O.T. OFFICE OF MATERIALS & RESEARCH. DETAILS & SPECIFICATIONS NOT SHOWN ARE PER THE MANUFACTURER'S REQUIREMENTS.

(PLASTIC ALTERNATE)

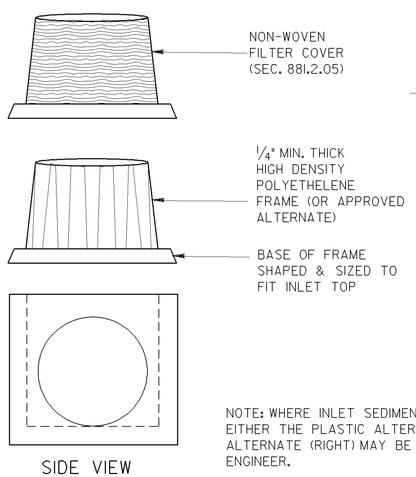

SIDE VIEW

(METAL ALTERNATE)

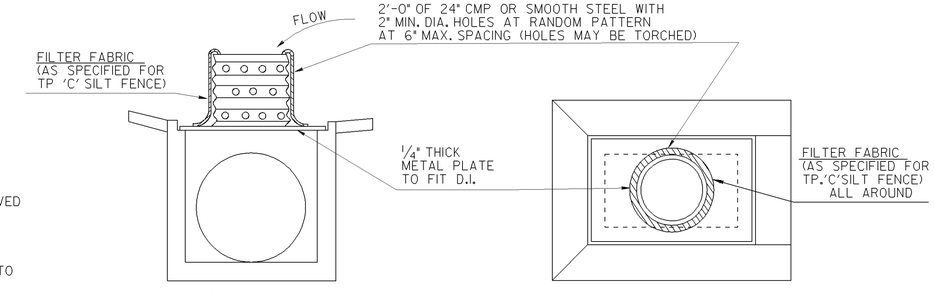

SIDE VIEW

TOP VIEW

NOTE: WHERE INLET SEDIMENT TRAPS ARE SPECIFIED, EITHER THE PLASTIC ALTERNATE (LEFT) OR THE METAL ALTERNATE (RIGHT) MAY BE USED AS APPROVED BY THE ENGINEER.

NOTE:
INLET SEDIMENT TRAP AND INLET TO BE BUILT CONTINUOUS WITH PIPE

NOTE:
PAYMENT AS INLET SEDIMENT TRAP PER EACH

NOTE: SEE SEPARATE DETAILS FOR SILT FENCE AROUND DROP INLETS.

INLET SEDIMENT TRAP - FOR DROP INLETS

DATE	REVISION	BY

DEPARTMENT OF TRANSPORTATION
STATE OF GEORGIA

CONSTRUCTION DETAILS
TEMPORARY SILT FENCE
J-HOOK, INLET SEDIMENT TRAPS

NO SCALE — JANUARY 2011

NUMBER D-24C (SHEET 3 OF 4)