STATE	PROJECT NUMBER	SHEET NO.	TOTAL SHEETS
GA.	M004780	41	65

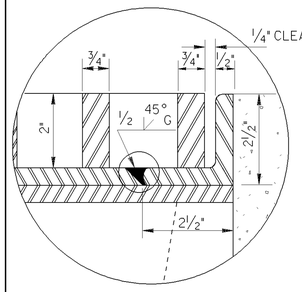

DETAIL A

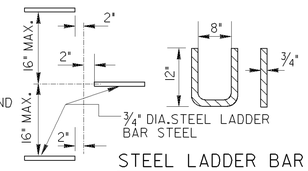

STEEL LADDER BAR STEPS

NOTES:
STEPS ARE REQ'D. ON ALL STRUCTURES WHERE H IS GREATER THAN 4'-0".
THE NUMBER AND LOCATION OF STEPS WILL BE AS DIRECTED BY THE ENGINEER
AN ALTERNATE STEP MAY BE SUBSTITUTED, IF APPROVED BY THE GA. D.O.T. OFFICE OF MATERIALS & RESEARCH.

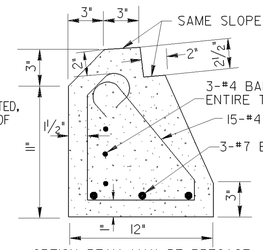

OPTION: BEAM MAY BE PRECAST

DETAIL B

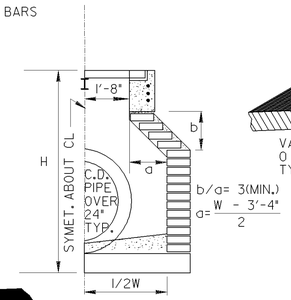

DETAIL "C"

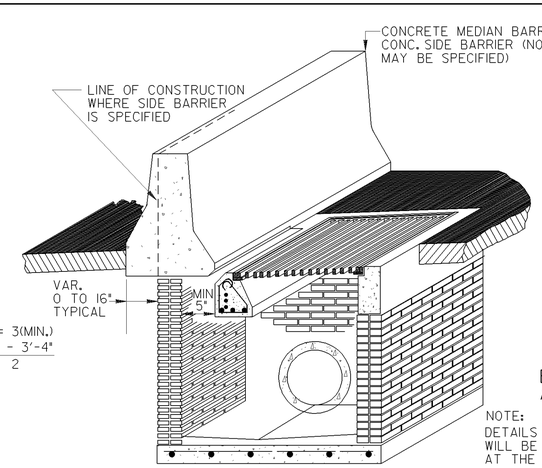

SINGLE GRATE

DROP INLET TYPE M-1

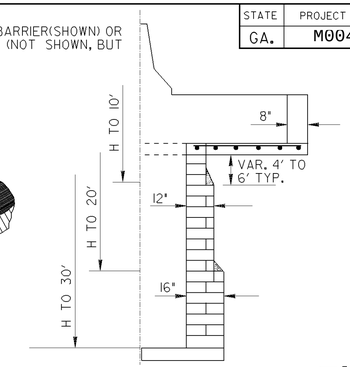

BRICK WALL THICKNESS FOR ADD'L HEIGHTS

NOTE:
DETAILS NOT SHOWN HERE WILL BE SIMILAR TO THOSE AT THE LEFT.

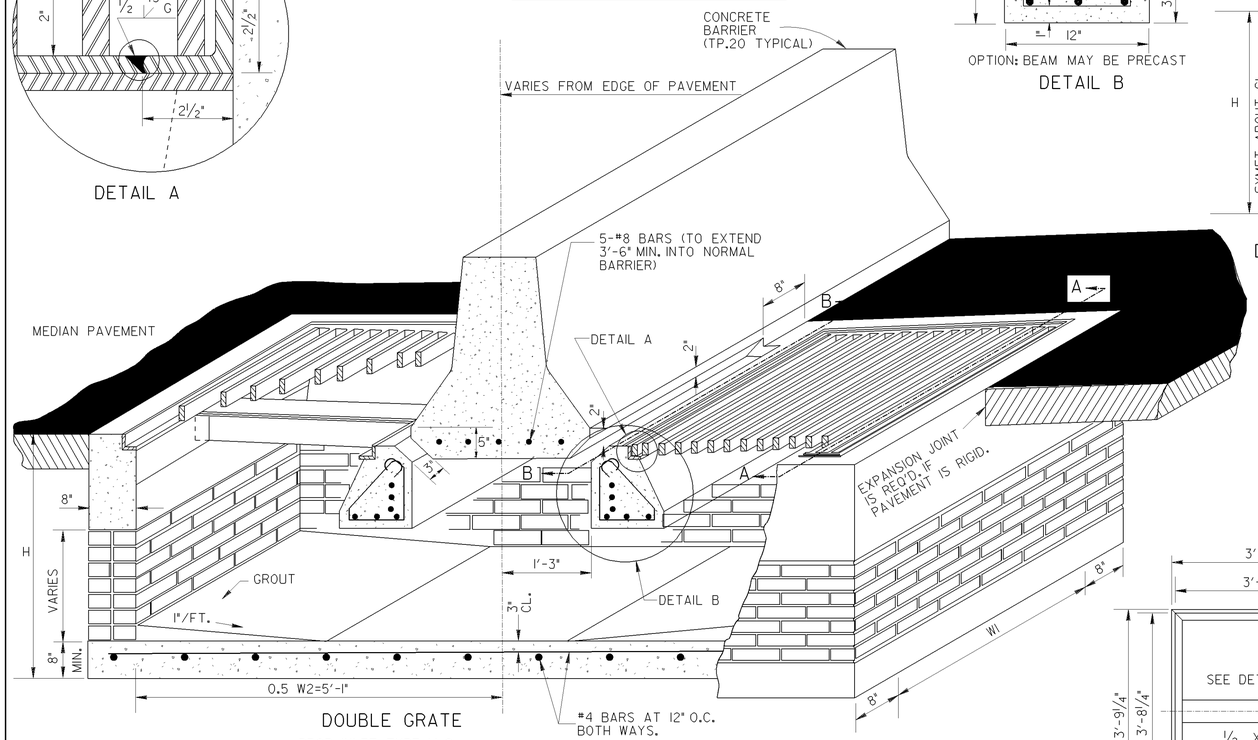

DOUBLE GRATE

DROP INLET TYPE M-2

MINIMUM DIMENSIONS: INLET WITH CROSS DRAIN PIPE				
PIPE SIZE	W1	a	b	MIN. H
15"	3'-0"	—	—	3'-10"
18"	3'-0"	—	—	4'-2"
24"	3'-0"	—	—	4'-9"
30"	3'-6"	1"	3"	5'-4"
36"	4'-0"	4"	1'-0"	6'-4"
42"	4'-6"	7"	1'-9"	7'-8"
48"	5'-0"	10"	2'-6"	9'-0"
54"	5'-6"	1'-1"	3'-3"	10'-4"
60"	6'-0"	1'-4"	4'-0"	11'-8"

MINIMUM DIMENSIONS: INLET WITH LONGITUDINAL PIPE			
PIPE SIZE	T±M-1 W2	T±M-2 W2	MIN. H
15"	4'-3"	10'-2"	3'-10"
18"	4'-3"	10'-2"	4'-2"
24"	4'-3"	10'-2"	4'-9"
30"	4'-3"	10'-2"	5'-4"
36"	4'-3"	10'-2"	5'-10"
42"	4'-10"	10'-2"	6'-6"
48"	5'-8"	10'-2"	7'-1"

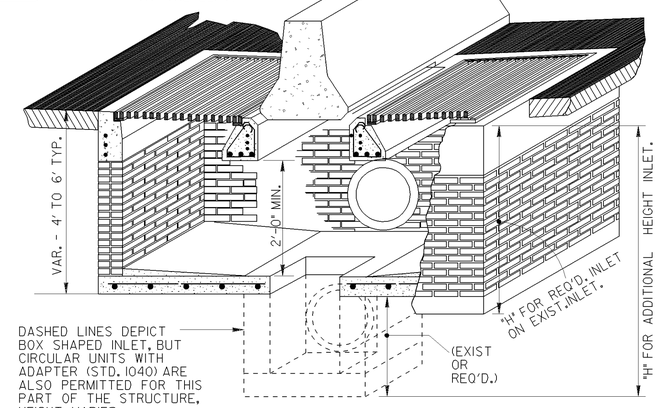

DASHED LINES DEPICT BOX SHAPED INLET, BUT CIRCULAR UNITS WITH ADAPTER (STD. 1040) ARE ALSO PERMITTED FOR THIS PART OF THE STRUCTURE, HEIGHT VARIES.

DROP INLET WITH ADDITIONAL HEIGHT OR OVER EXISTING INLET

(TYPE M-2 INLET SHOWN; CONSTRUCTION SIMILAR FOR TYPE M-1)

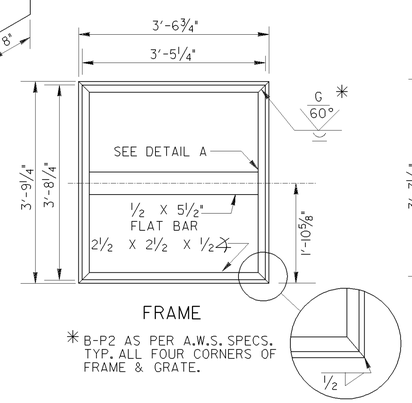

FRAME

* B-P2 AS PER A.W.S. SPECS. TYP. ALL FOUR CORNERS OF FRAME & GRATE.

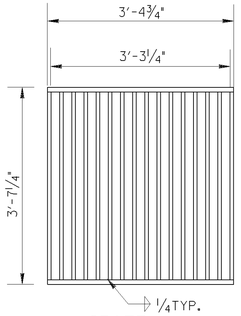

GRATE

16 BARS @ 3/4" = 1'-0"
14 SPACES @ 1 15/16" = 2'-3 1/8"
1 SPACE @ 1 5/8" = 0'-1 5/8"
3'-4 3/4"

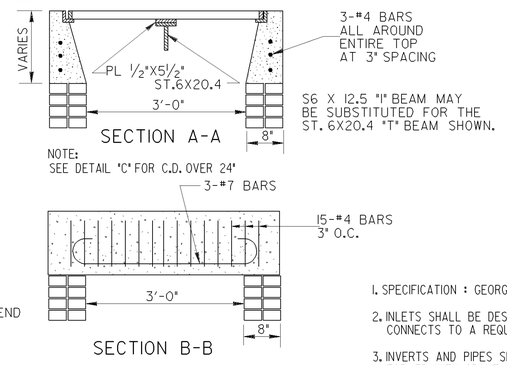

SECTION A-A

NOTE:
SEE DETAIL "C" FOR C.D. OVER 24"

SECTION B-B

BARRIER SHAPE SHOWN FOR USE WITH TYPE 22 BARRIER; DETAILS ARE SIMILAR WITH TYPE 6 SIDE BARRIER, BUT WITHOUT SAFETY FACE ON OPPOSITE SIDE, SEE STD. 4940 OR 4948 AS NEEDED FOR ADDITIONAL DETAILS.

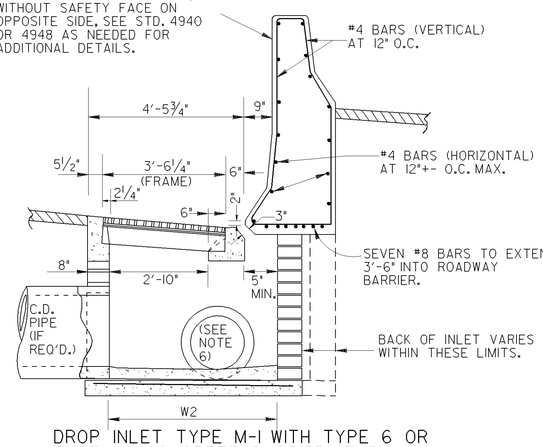

DROP INLET TYPE M-1 WITH TYPE 6 OR TYPE 22 CONCRETE BARRIER (TYP.)

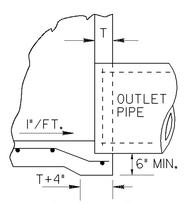

ALTERNATE TO INVERT

GENERAL NOTES

1. SPECIFICATION : GEORGIA STANDARD CURRENT EDITION, AND SUPPLEMENTS THERETO.
2. INLETS SHALL BE DESIGNATED AS GROUP I (SEC. 668) UNLESS A CROSS DRAIN PIPE OVER 36" CONNECTS TO A REQUIRED PART OF THE INLET.
3. INVERTS AND PIPES SHOWN ARE ILLUSTRATIVE. SEE PLANS FOR SPECIFICS. INVERTS SHALL BE FORMED WITH GROUT OR CONCRETE AS SHOWN IN THE PLANS OR AS DIRECTED BY THE ENGINEER.
4. FOR CONCRETE BARRIER DETAILS NOT SHOWN, SEE SEPARATE STANDARDS OR PLAN DETAILS. IF THE ROADWAY BARRIER HAS REINFORCING STEEL, THE REINFORCING SHALL BE CONTINUED IN BARRIER SECTION ACROSS THE INLET. ADDITIONAL REINFORCING REQUIRED WHERE SHOWN.
5. BOTH THE GRATE AND THE FRAME SHALL BE EITHER A-36 STEEL; HOT-DIPPED GALVANIZED, A-123. AFTER FABRICATION OR A-588 STEEL; NOT GALVANIZED DRILL 1/4" DIA HOLE IN ONE FRAME CORNER FOR A-36 STEEL TO PREVENT BUILD-UP OF GALVANIZING MATERIAL.
6. IF BARRIER (OR WALL) FOOTING PREVENTS NORMAL LOCATION OF LOGITUDINAL PIPE, W2 MAY BE ENLARGED TO RECEIVE AN OFFSET LONGITUDINAL OR 18" DIA. 60° WYE CONNECTION MAY BE USED TO DRAIN NORMAL SIZE INLET INTO THE OFFSET LOGITUDINAL. WHERE WYE CONNECTIONS ARE USED, MANHOLES SHALL BE SPACED AT 600'+- INTERVALS IN PLACE OF WYE CONNECTION. IF DRAINAGE PERMITS, AND STRUCTURAL APPROVAL IS MADE, LONGITUDINAL PIPE MAY BE LOCATED UNDER THE FOOTING.

SPECIAL NOTE:
STANDARD 5001-M INLET GRATES ARE FOR USE ONLY ON LIMITED ACCESS TYPE FACILITIES.

BY	REVISION	DATE
G.L.O.	REV. GEN. NOTES NO. 5 & 6	6-14-10
G.J.P.	REDRAWN	6-30-98
R.M.U.	ADD SPECIAL NOTE	8-15-97
R.M.U.	ADD NOTE 6	9-11-94

DEPARTMENT OF TRANSPORTATION
STATE OF GEORGIA

STANDARD
DROP INLET TYPES M-1 & M-2
ADJACENT TO CONCRETE BARRIER

NO SCALE — MAY 1996

DES. W.W.S. (SUBMITTED) STATE DESIGN POLICY ENGINEER
DRW. L.G.S.
TRA. R.M.U.
CHK. R.K.C.
(APPROVED) CHIEF ENGINEER

NUMBER 5001M
SHEET 1 OF 2