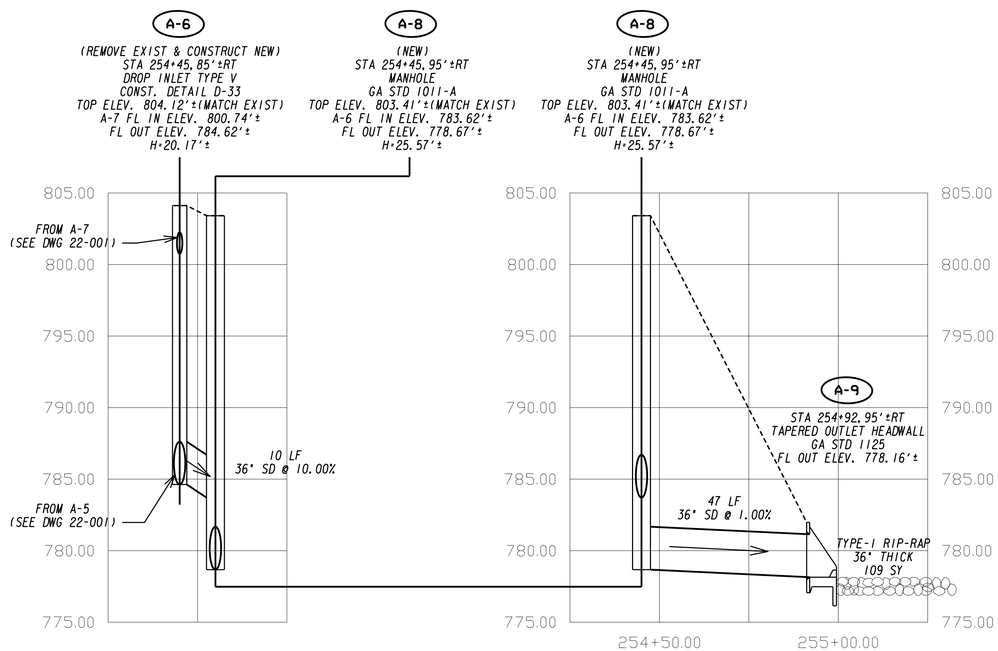

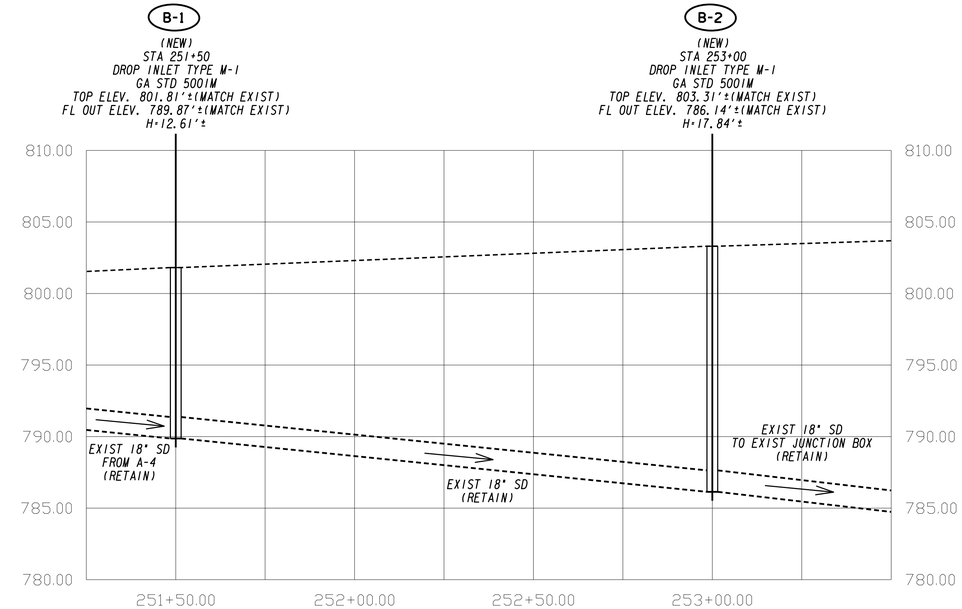

NOTES FOR SYSTEM-B & SYSTEM-C:

1) THE CONTRACTOR SHALL VERIFY LOCATION OF EXISTING STORM DRAIN SYSTEMS, UTILITIES AND OTHER EXISTING FEATURES TO CONSTRUCT PROPOSED STORM DRAINAGE STRUCTURES.
2) COST TO CONNECT EXISTING DRAINAGE PIPES IS INCLUDED IN THE COST OF THE STRUCTURE. NO ADDITIONAL PAYMENT WILL BE MADE.
3) ALL NEW PROPOSED DRAINAGE STRUCTURES SHALL HAVE INVERTS WITH A FULL BENCH.
4) THE CONTRACTOR SHALL BE RESPONSIBLE FOR SHORING TO KEEP EXISTING STORM DRAIN SYSTEMS, UTILITIES AND OTHER EXISTING FEATURES OPERATIONAL DURING CONSTRUCTION. NO ADDITIONAL PAYMENT WILL BE MADE.

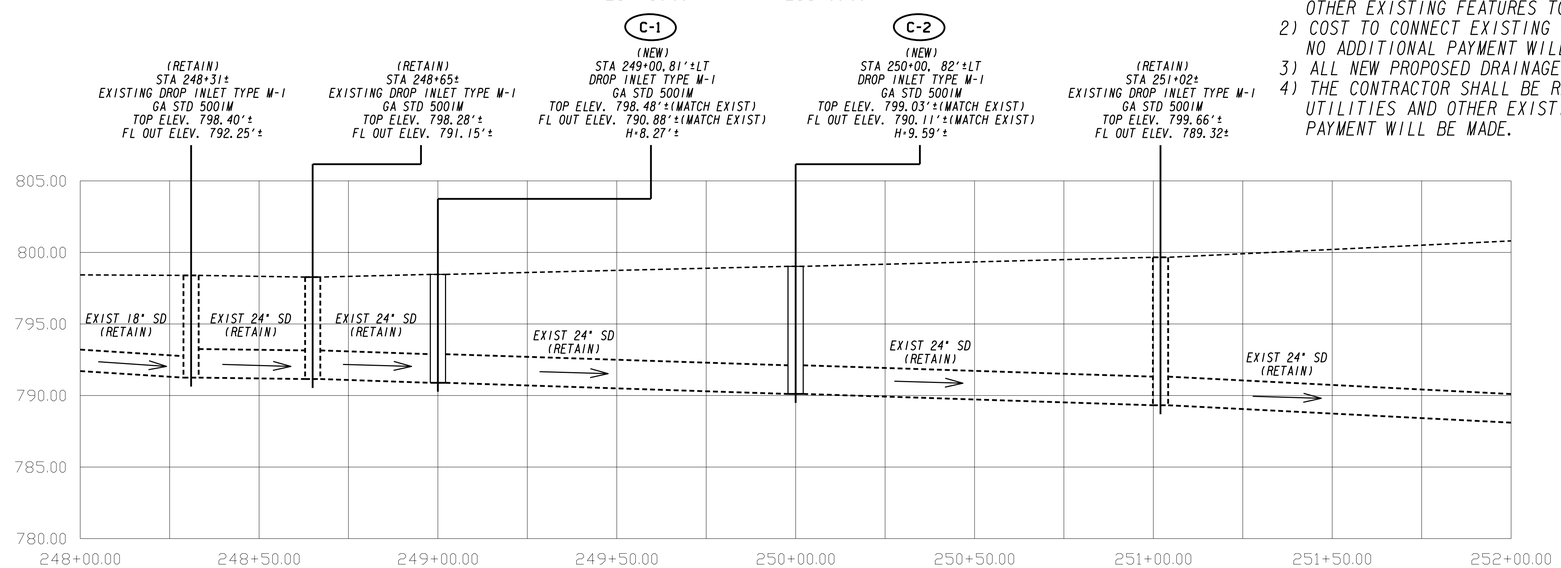

USE ON CONSTRUCTION

GEORGIA
DEPARTMENT OF TRANSPORTATION

SCALE
1" = 20' HORIZONTAL
1" = 5' VERTICAL

REVISION DATES		
06-02-2014		

STATE OF GEORGIA
DEPARTMENT OF TRANSPORTATION
OFFICE: DESIGN POLICY & SUPPORT

DRAINAGE PROFILES

PROJECT M004780
FULTON COUNTY

DRAWING No. 22-002