STATE	P.I. NUMBER	SHEET NO.	TOTAL SHEETS
GA.	M004627	20	40

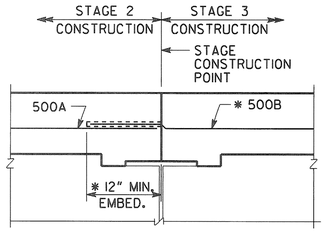

STAGING DETAIL
NO SCALE

NOTE: CONTRACTOR SHALL DOWEL IN AND EPOXY STAGE 3 CONSTRUCTION REINFORCEMENT AFTER STAGE 2 CONSTRUCTION IS COMPLETE.

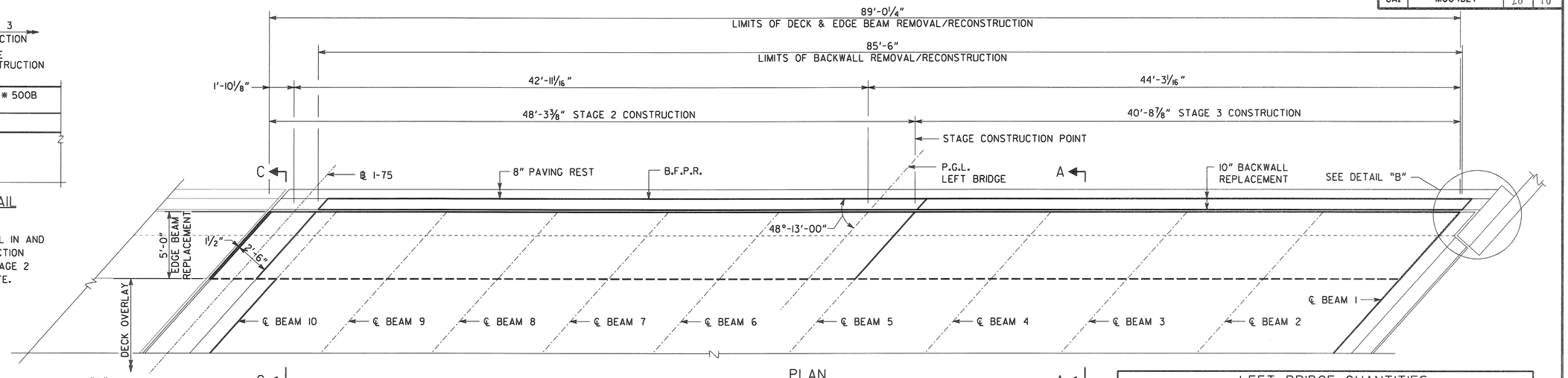

PLAN
ABUTMENT 1, LEFT BRIDGE SHOWN (ABUTMENT 4 SIMILAR)

LEFT BRIDGE QUANTITIES		
ITEM	SPAN 1	SPAN 3
CU YD CLASS AA CONCRETE	49.2	49.2
LUMP - SUPERSTR REINF STEEL, LB	4581	4581
LUMP - EPOXY COATED SUPERSTR REINF STEEL, LB	666	666

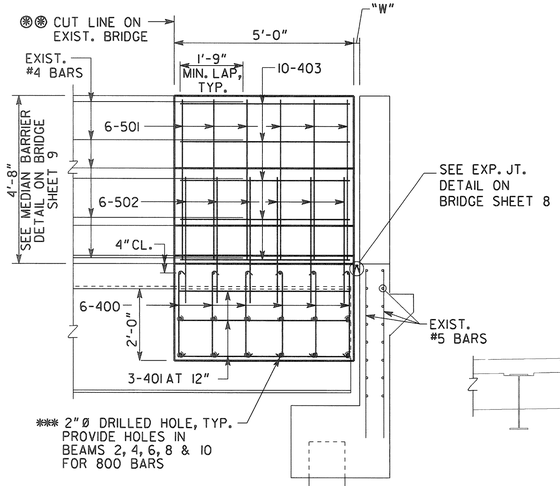

SECTION C-C
NO SCALE
NOTE: EXISTING DECK REINFORCEMENT NOT SHOWN FOR CLARITY.

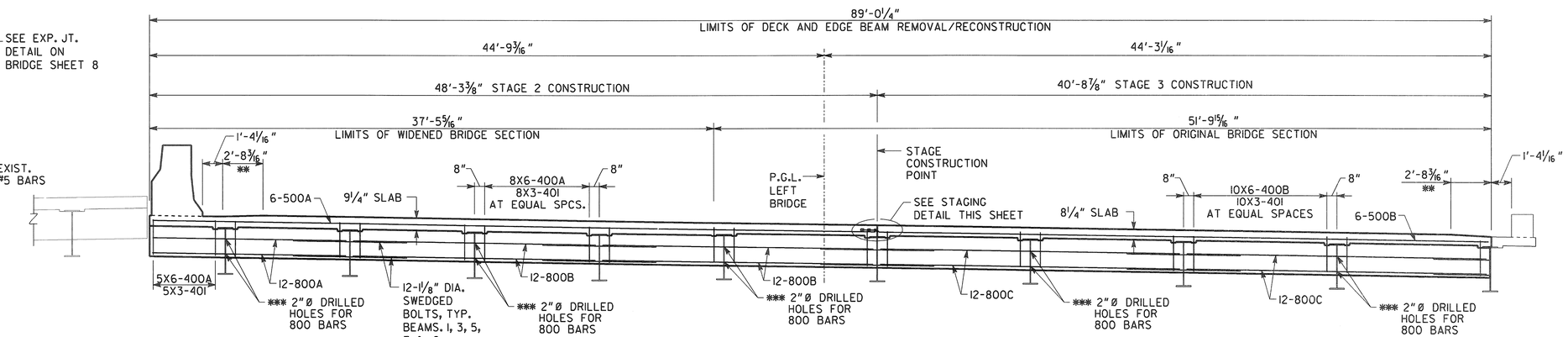

SECTION THRU EDGE BEAM
ABUTMENT 1, LEFT BRIDGE SHOWN (ABUTMENT 4 SIMILAR)
LOOKING BACK

NOTES:

1. ⊛⊛ REQUIRED 1" VERTICAL SAW CUT IN BARRIER. CARE SHALL BE EXERCISED IN REMOVAL OF EXISTING CONCRETE. RETAIN EXISTING REINFORCEMENT. ANY EXISTING REINFORCEMENT STEEL DAMAGED DURING REMOVAL SHALL BE REPLACED BY THE CONTRACTOR AT NO ADDITIONAL COST TO THE DEPARTMENT.
2. EXISTING DECK REINFORCEMENT TO REMAIN UNLESS NOTED IN THE PLANS.
3. MAINTAIN 2" CL. TO ALL REINFORCEMENT UNLESS OTHERWISE NOTED.
4. SEE BRIDGE SHEET 8 FOR "W" DIMENSION.
5. EDGE BEAM SHALL BE POURED DURING CONCRETE OVERLAY PLACEMENT AND COST SHALL BE INCLUDED WITH PAY ITEM 500-3002.
6. * BARS SHALL BE ANCHORED WITH TYPE VIII EPOXY ADHESIVE (12" MIN. EMBED.). COST FOR FURNISHING AND INSTALLING EPOXY ADHESIVE SHALL BE INCLUDED IN THE PRICE BID FOR PAY ITEM 511-3000.
7. ** OVERLAY TAPER TO EXISTING DECK.
8. *** COST FOR DRILLED HOLES SHALL BE INCLUDED IN THE OVERALL BID SUBMITTED.

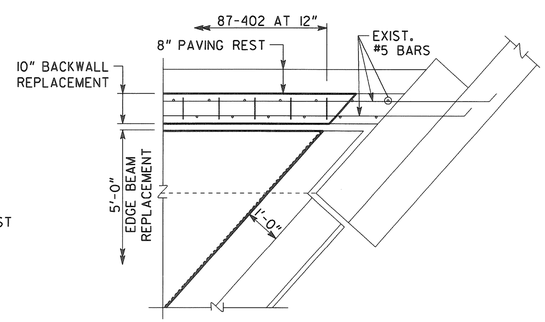

DETAIL B
NO SCALE

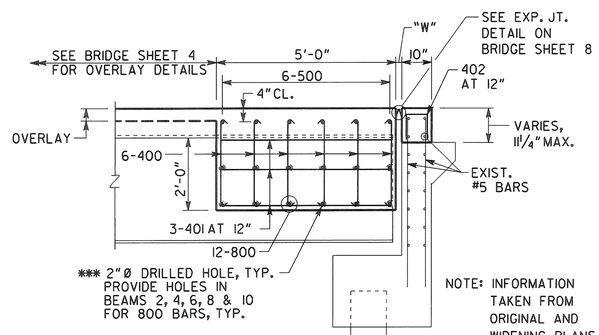

NOTE: INFORMATION TAKEN FROM ORIGINAL AND WIDENING PLANS.

SECTION A-A
NO SCALE
NOTE: EXISTING DECK REINFORCEMENT NOT SHOWN FOR CLARITY.

EXISTING BRIDGE SERIAL NO. 015-0101-0
EXISTING BRIDGE I.D. NO. 015-0040ID-299.66N
PROJECT P.I. NO. M004627
BRIDGE NO. 1 LT

Heath & Lineback Engineers
INCORPORATED
2390 CANTON ROAD, BUILDING 200
MARIETTA, GEORGIA 30066-5393
(770)424-1668

STATE OF GEORGIA
DEPARTMENT OF TRANSPORTATION
ENGINEERING DIVISION - OFFICE OF BRIDGES AND STRUCTURES

ABUTMENT 1 & 4 EDGE BEAM REPLACEMENT DETAILS
I-75 OVER CEDAR CREEK ROAD (CR 179)
BARTOW COUNTY P.I. NO. M004627

DRAWING NO. 35 - 005
BRIDGE SHEET 5 OF 11

REVISIONS | DATE | BY

SCALE: ¼" = 1'-0" SPETEMBER 2013

DESIGNED	TBS	CHECKED	KAK	BMU REVIEWED	CLB
DRAWN	TBS	REVIEWED	MS	APPROVED	BFR

JN 2013006 \ 2013006.002 \ DGN \ BRIDGE \ M004627_DETIL T.DGN