STATE	P.I. NUMBER	SHEET NO.	TOTAL SHEETS
GA.	M004588	48	75

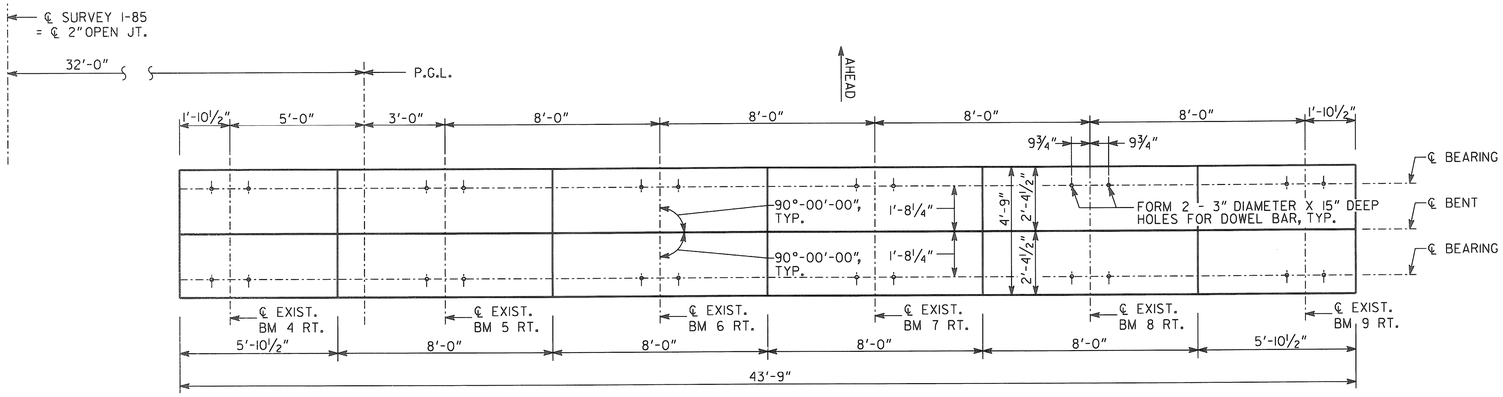

PLAN

RIGHT BRIDGE SHOWN / LEFT BRIDGE SIMILAR
BENTS 3-6

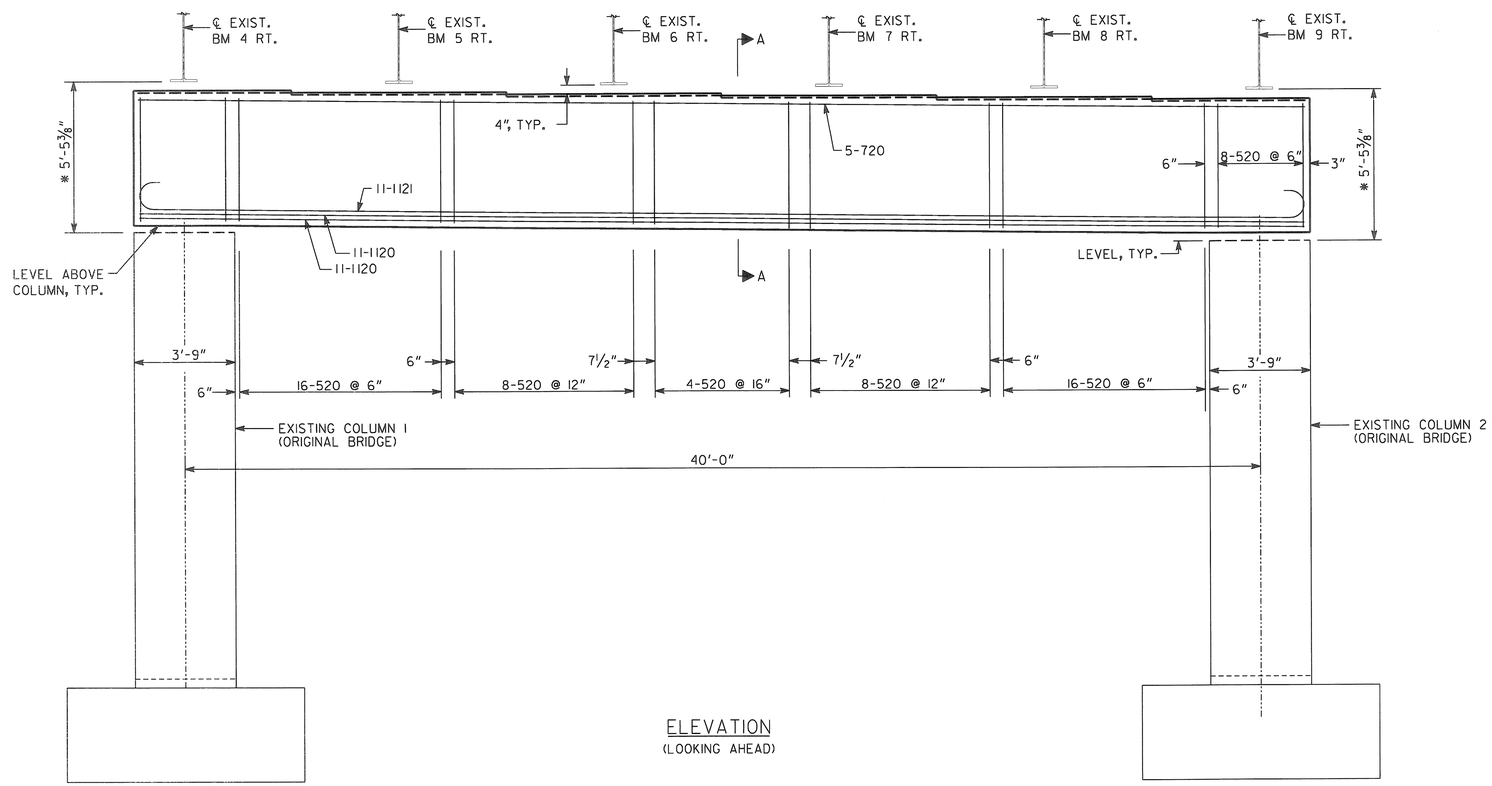

ELEVATION

(LOOKING AHEAD)

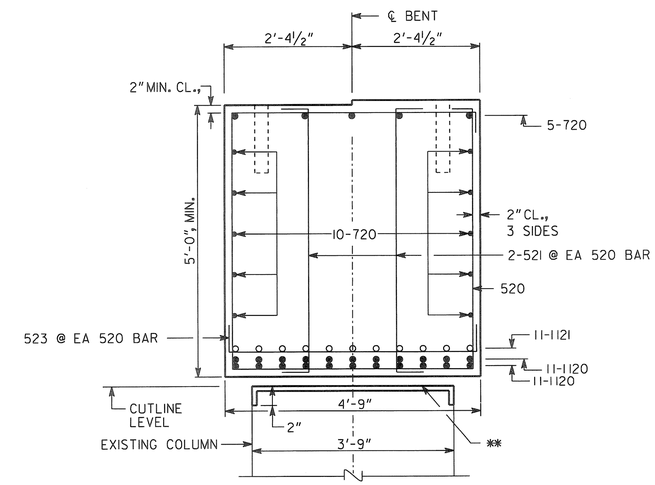

SECTION A-A

NO SCALE

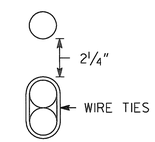

BARS TO BE BUNDLED SHALL BE BUNDLED VERTICALLY

BUNDLING DETAIL

NO SCALE

NOTES:

1. MAINTAIN 2" CL. ON ALL REINFORCEMENT UNLESS OTHERWISE NOTED.
2. TOP OF CAP ELEVATIONS ARE TO BE DETERMINED IN THE FIELD BY THE CONTRACTOR AND CORRESPONDS TO BOTTOM OF BEAM AT CENTERLINE OF EACH BEARING.
3. WIDENED STRUCTURE NOT SHOWN FOR CLARITY.
4. * DISTANCE TO COLUMN CUT LINE SHALL BE BASED ON THE LOWER OF THE TWO ADJACENT BEARINGS.
5. ** COAT TOP OF CUT COLUMN WITH EPOXY PAINT (SIKADUR 55 SLV, DURAL 452 LV, OR APPROVED EQUAL). TOP OF COLUMN SHALL BE SANDBLASTED CLEAN PRIOR TO EPOXY PAINT APPLICATION. COAT ENTIRE TOP OF COLUMN. INCLUDE THE COST IN THE OVERALL BID SUBMITTED.

SUBSTRUCTURE QUANTITIES

ITEM	LT. BR.	RT. BR.
	BENTS 3, 4, 5 OR 6	BENTS 3, 4, 5 OR 6
CY CLASS "AA" CONCRETE	38.5	38.5
LB BAR REINF STEEL	11,855	11,855

BRIDGE NO. 1 LT. & RT.

Heath & Lineback Engineers
INCORPORATED
2390 CANTON ROAD, BUILDING 200
MARIETTA, GEORGIA 30066-5393
(770)424-1668

STATE OF GEORGIA

DEPARTMENT OF TRANSPORTATION

ENGINEERING DIVISION - OFFICE OF BRIDGES AND STRUCTURES

INTERMEDIATE BENT DETAILS
(BENTS 3-6)
I-85 OVER TRANSCONTINENTAL PIPELINE

COWETA COUNTY — P.I. NO. M004588

SCALE: ⅜" = 1'-0" — SEPTEMBER 2013

DRAWING NO. 35 - 009

BRIDGE SHEET 9 OF 10

BY	REVISIONS	DATE

DESIGNED	BCB	CHECKED	BKA	BMU REVIEWED	CLB
DRAWN	BCB	REVIEWED	GBL/MS	APPROVED	BFR

J:\ 2007006 \ 2007006.20 \ BRIDGE \ 09-INT BENT.DGN