STATE	P.I. NUMBER	SHEET NO.	TOTAL SHEETS
GA.	M004588	44	75

JOINT OPENING		
	TEMPERATURE (°F)	W (IN.)
BENTS 3, 4 & 6 (LT. BRIDGE)	30	1 11/16"
	60	1 1/2"
	90	1 5/16"
BENT 5 (LT. BRIDGE)	30	1 7/8"
	60	1 1/2"
	90	1 1/8"
BENT 3 (RT. BRIDGE)	30	1 7/8"
	60	1 1/2"
	90	1 1/8"
BENTS 4, 5 & 6 (RT. BRIDGE)	30	1 11/16"
	60	1 1/2"
	90	1 5/16"

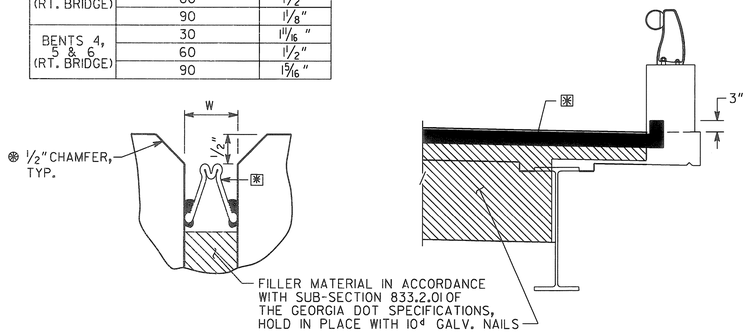

LONGITUDINAL SECTION TRANSVERSE SECTION

EXPANSION JOINT DETAILS

NOTES:
1. "W" (JOINT WIDTH) SHALL BE BASED ON THE AVERAGE BEAM TEMPERATURE.
2. PRORATE "W" BETWEEN TEMPERATURE VALUES SHOWN.
3. ASSUMED NORMAL TEMPERATURE IS 60° F.
4. ⊛ CONSTRUCTION SHALL NOT DEVIATE FROM THIS DETAIL UNLESS APPROVED BY THE STATE BRIDGE MAINTENANCE ENGINEER.
5. SEE SPECIAL PROVISION - SECTION 449 "BRIDGE DECK JOINT SEALS" FOR FURTHER REQUIREMENTS.
6. INCLUDE ALL COSTS ASSOCIATED WITH FURNISHING LABOR, MATERIALS, FABRICATION AND INSTALLATION OF PREFORMED SILICONE SEALS COMPLETE AND IN PLACE IN THE UNIT PRICE BID FOR PAY ITEM 449-1350.

JOINT OPENING		
	TEMPERATURE (°F)	W (IN.)
BENTS 2 (LT. BRIDGE)	30	1 7/8"
	60	1 13/16"
	90	1 3/4"
BENT 7 (LT. BRIDGE)	30	1 13/16"
	60	1 11/16"
	90	1 9/16"
BENT 2 (RT. BRIDGE)	30	2 1/4"
	60	2 1/8"
	90	2"
BENT 7 (RT. BRIDGE)	30	1 3/4"
	60	1 11/16"
	90	1 5/8"

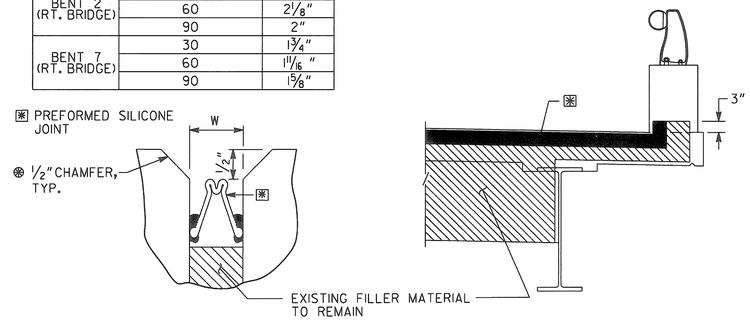

LONGITUDINAL SECTION TRANSVERSE SECTION

EXPANSION JOINT DETAILS

NOTES:
1. "W" (JOINT WIDTH) SHALL MATCH EXISTING.
2. ASSUMED NORMAL TEMPERATURE IS 60° F.
3. ⊛ CONSTRUCTION SHALL NOT DEVIATE FROM THIS DETAIL UNLESS APPROVED BY THE STATE BRIDGE MAINTENANCE ENGINEER.
4. SEE SPECIAL PROVISION - SECTION 449 "BRIDGE DECK JOINT SEALS" FOR FURTHER REQUIREMENTS.
5. INCLUDE ALL COSTS ASSOCIATED WITH FURNISHING LABOR, MATERIALS, FABRICATION AND INSTALLATION OF PREFORMED SILICONE SEALS COMPLETE AND IN PLACE IN THE UNIT PRICE BID FOR PAY ITEM 449-1350.

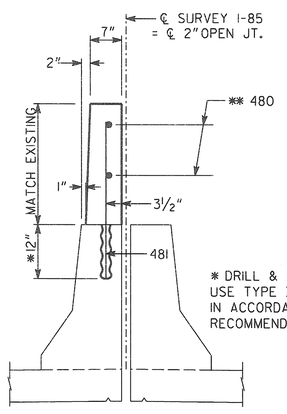

SECTION A-A
NO SCALE
LOOKING AHEAD

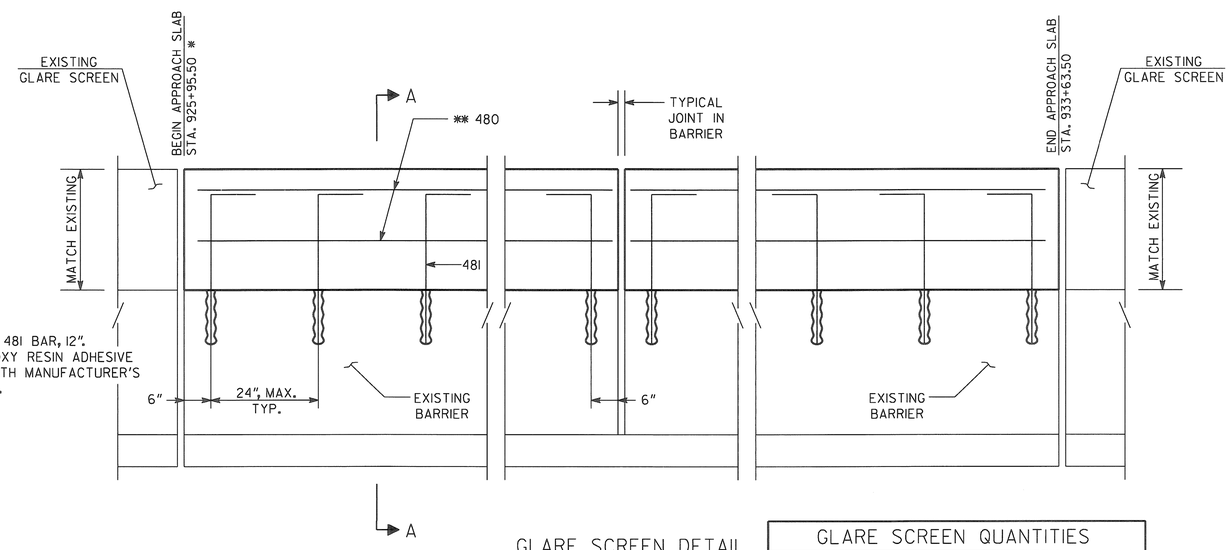

GLARE SCREEN DETAIL
ELEVATION VIEW
NO SCALE

NOTES:
1. ✱✱ 480 BARS ARE DETAILED AS EQUIVALENT FULL LENGTH BARS. CONTRACTOR SHALL ADJUST ACTUAL BAR LENGTHS BASED ON FIELD MEASUREMENTS.
2. GLARE SCREEN IS ONLY ON THE LEFT BRIDGE AND WALL. GLARE SCREEN SHALL BE POURED WITH CLASS A CONCRETE AND COST SHALL BE INCLUDED WITH PAY ITEM 500-3101.

GLARE SCREEN QUANTITIES	
ITEM	LT. BRIDGE
CU YD CLASS "A" CONCRETE	54
LS SUPERSTR REINF STEEL, BR NO - 1LT	2202

DRAWING NO. 35 - 005

BRIDGE SHEET 5 OF 10

BRIDGE NO. 1 LT. & RT.

Heath & Lineback Engineers
INCORPORATED
2390 CANTON ROAD, BUILDING 200
MARIETTA, GEORGIA 30066-5393
(770)424-1668

STATE OF GEORGIA
DEPARTMENT OF TRANSPORTATION
ENGINEERING DIVISION - OFFICE OF BRIDGES AND STRUCTURES

REVISIONS | DATE | BY

MISCELLANEOUS DETAILS - SHEET 1
I-85 OVER TRANSCONTINENTAL PIPELINE
COWETA COUNTY P.I. NO. M004588

SCALE: NO SCALE SEPTEMBER 2013

DESIGNED	BCB	CHECKED	BKA	BMJ REVIEWED	CLB
DRAWN	BCB/DRB	REVIEWED	GBL/MS	APPROVED	BFR

J:\ 2007006 \ 2007006.20 \ BRIDGE \ 05-MISC DETAILS.DGN