STATE	PROJECT NUMBER	SHEET NO.	TOTAL SHEETS
GA.			

TYPE 1 SPILLWAY (TYPICAL USE: ON GRADES, FILLS OVER 5 FT.)

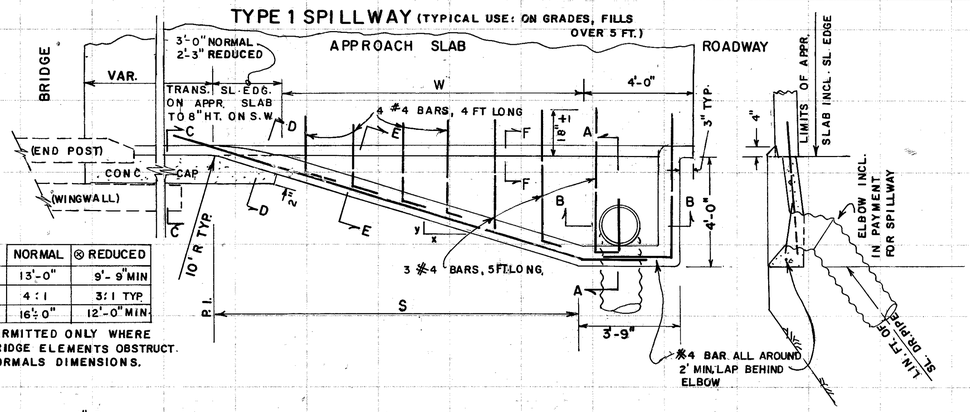

	NORMAL	⊗ REDUCED
W	13'-0"	9'-9" MIN
x : y	4 : 1	3 : 1 TYP.
S	16½'-0"	12'-0" MIN.

⊗ PERMITTED ONLY WHERE BRIDGE ELEMENTS OBSTRUCT NORMALS DIMENSIONS.

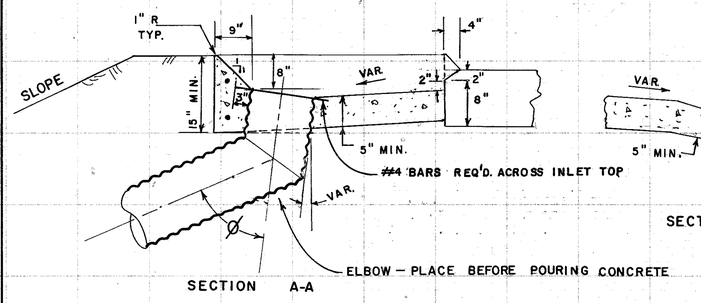

SECTION A-A

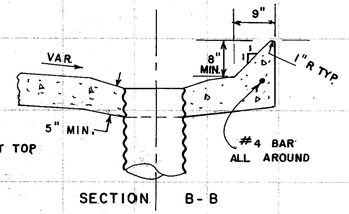

SECTION B-B

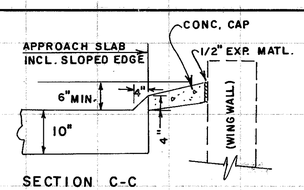

SECTION C-C

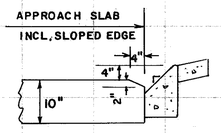

SECTION D-D

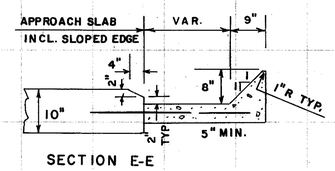

SECTION E-E

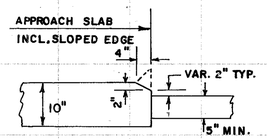

SECTION F-F.

TYPE 3 SPILLWAY

(TYPICAL USE: ON GRADES, FILLS 5. FT. OR LESS)

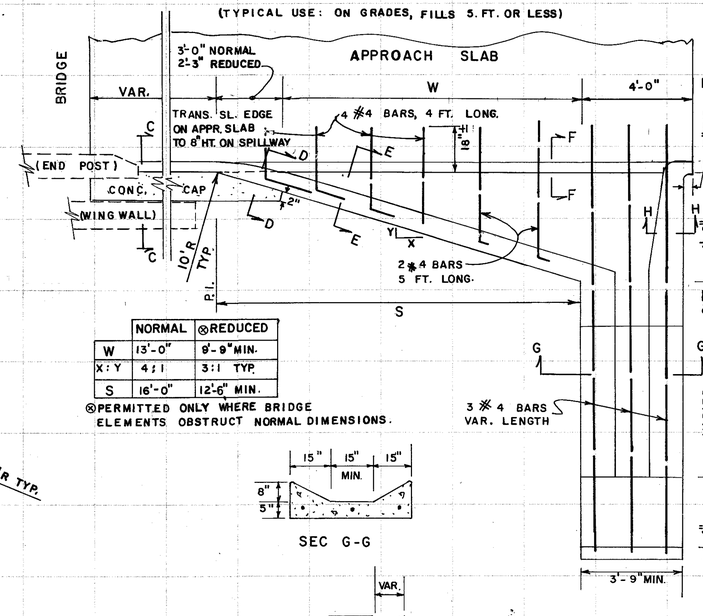

	NORMAL	⊗ REDUCED
W	13'-0"	9'-9" MIN.
X : Y	4 : 1	3 : 1 TYP.
S	16'-0"	12'-6" MIN.

⊗ PERMITTED ONLY WHERE BRIDGE ELEMENTS OBSTRUCT NORMAL DIMENSIONS.

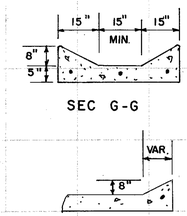

SEC G-G

SEC. H-H

OUTLET APRON

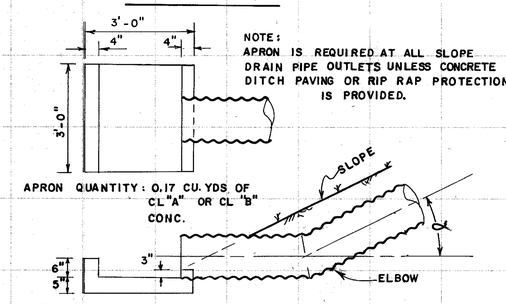

NOTE: APRON IS REQUIRED AT ALL SLOPE DRAIN PIPE OUTLETS UNLESS CONCRETE DITCH PAVING OR RIP RAP PROTECTION IS PROVIDED.

NOTE: APRON CONSTRUCTED FROM SAND CEMENT BAG RIP RAP, MORTAR RUBBLE MASONRY OR STONE GROUT RIP RAP MAY BE SUBSTITUTED FOR CONCRETE APRON.

SLOPE DRAIN PIPE DIAMETERS	
PIPES I.D. (INCHES)	AREA DRAINING INTO SPILLWAY - (SQ. FT.)
15"	TO 24,100
18"	OVER 24,100

SLOPE DRAIN PIPE ELBOW ANGLES		
EMBANKMENT SLOPE	ELBOW IN SPILLWAY	ELBOW AT OUTLET
STEEPER THAN 4:1	Ø = 60°±	α = 30°±
4:1 OR FLATTER	Ø = 75°±	α = 15°±

TYPE 4 SPILLWAY (TYPICAL USE: IN SAGS OR LOW AREAS, FILLS 5 FT. OR LESS),

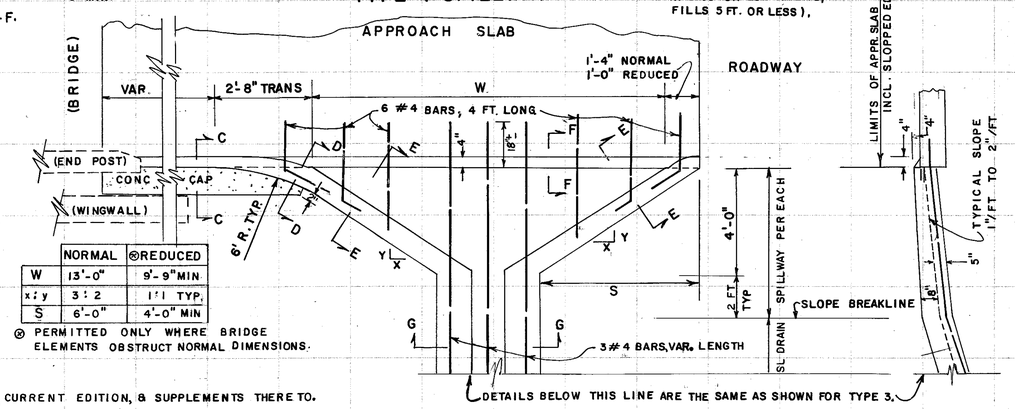

	NORMAL	⊗ REDUCED
W	13'-0"	9'-9" MIN
x : y	3 : 2	1 : 1 TYP.
S	6'-0"	4'-0" MIN

⊗ PERMITTED ONLY WHERE BRIDGE ELEMENTS OBSTRUCT NORMAL DIMENSIONS.

TYPE 2 SPILLWAY

(TYPICAL USE: IN SAGS OR LOW AREAS, FILLS OVER 5 FT.)

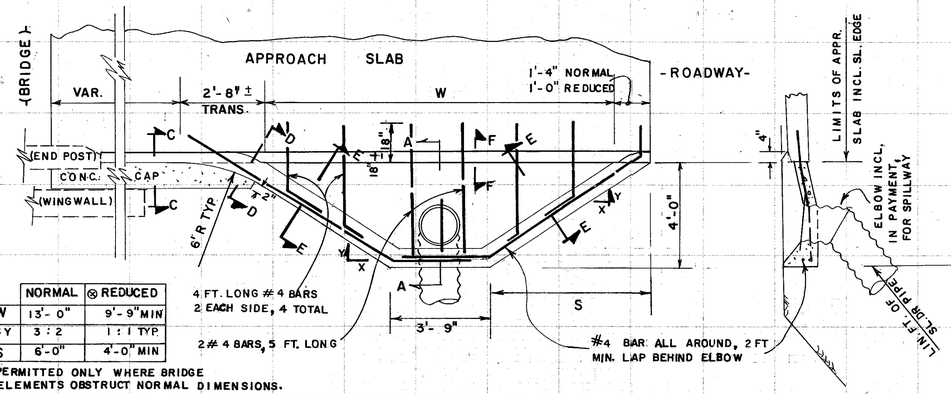

	NORMAL	⊗ REDUCED
W	13'-0"	9'-9" MIN
X : Y	3 : 2	1 : 1 TYP.
S	6'-0"	4'-0" MIN

⊗ PERMITTED ONLY WHERE BRIDGE ELEMENTS OBSTRUCT NORMAL DIMENSIONS.

GENERAL NOTES:

1. SPECIFICATIONS: GA. STANDARD, CURRENT EDITION, & SUPPLEMENTS THERETO.
2. PAYMENT FOR SPILLWAY (ANY TYPE) INCLUDES ALL TIE BARS & CONNECTIONS TO APPROACH SLAB.

NOTE: PAYMENT FOR SPILLWAY INCLUDES INDICATED BLOCKOUTS EXCEPT WHERE IT HAS BEEN VERIFIED THAT GUARDRAIL IS NOT REQUIRED.

* IF GUARDRAIL IS WARRANTED AT THE TRAILING END OF 4 OR MORE LANES, BLOCKOUTS FLAGGED WITH AN ASTERISK ARE OMITTED.

BLOCKOUT LOCATIONS FOR GUARDRAIL POST

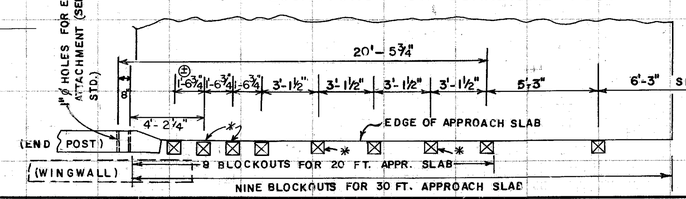

⊕ VARIED TO MISS BRIDGE PAV. REST

X.L.	R.H.G.	GENERAL REVISION 2-28-95
		BLOCKOUT SPA. 4-27-89

DEPARTMENT OF TRANSPORTATION

STATE OF GEORGIA

STANDARD CONCRETE SPILLWAYS

(ADJACENT TO APPROACH SLABS)

NO SCALE — REV. & REDR. JUNE, 1985

DES. R.M.U.
DRW R.M.U.
TRA. G.M.E.
CHK. R.K.C.

(SUBMITTED) Floyd E. Hardy — STATE ROAD & AIRPORT DESIGN ENGR.

(APPROVED) Hal Ringer — STATE HIGHWAY ENGINEER

NUMBER 9017J

FORM EF00003

TELEDYNE POST N18592