STATE	PROJECT NUMBER	SHEET NO.	TOTAL SHEETS
GA.	M004206	25	28

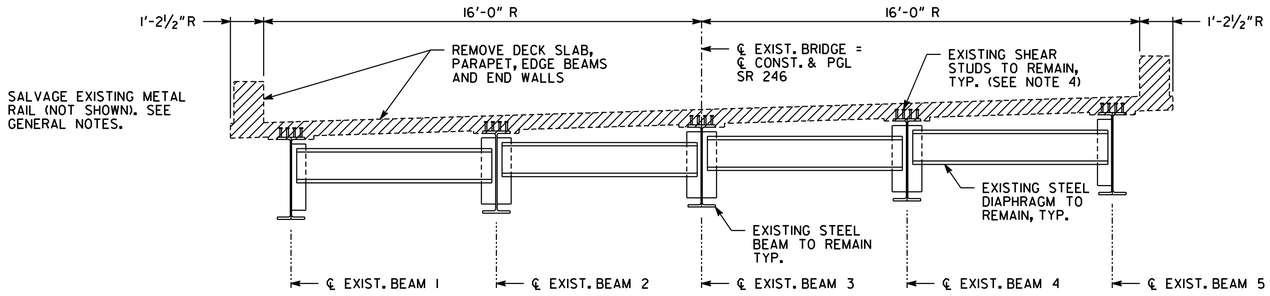

EXISTING DECK SECTION

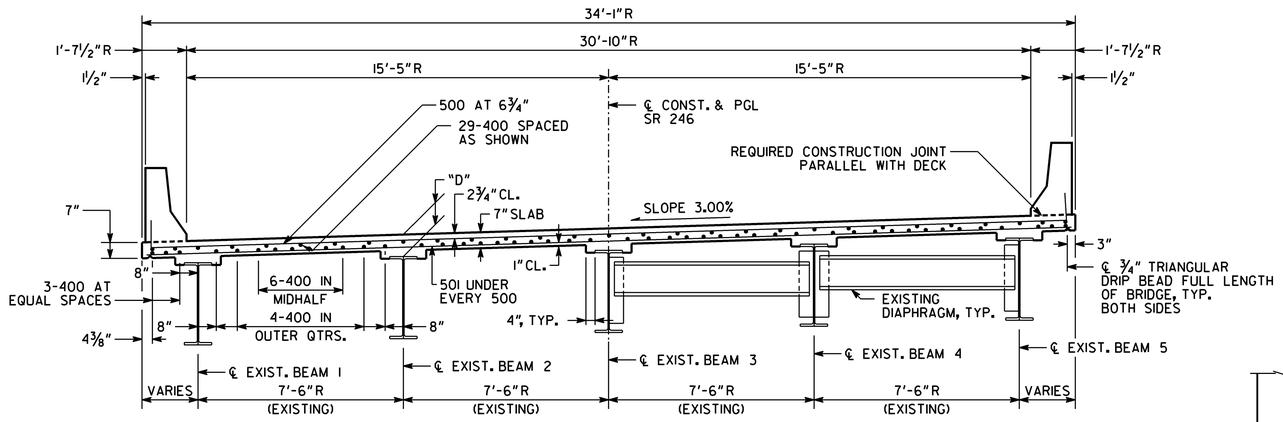

SECTION THRU SLAB

SECTION THRU DIAPHRAGM

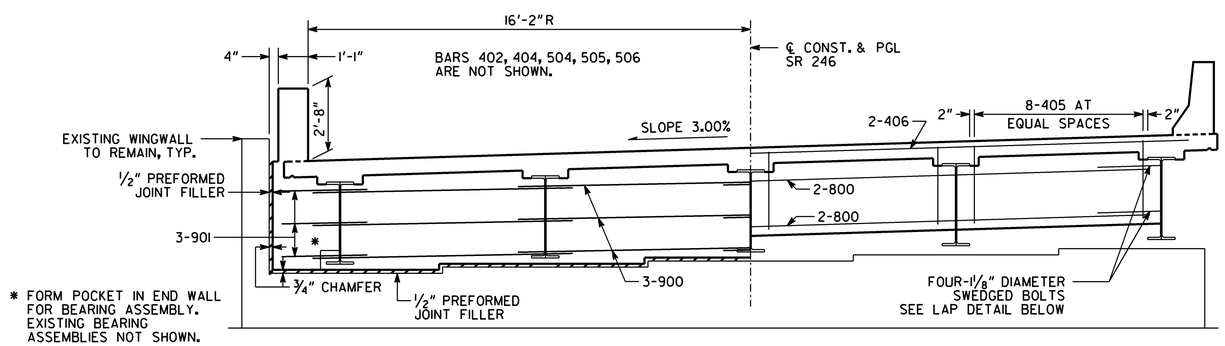

SECTION THRU ENDWALL

SECTION THRU EDGE BEAM

	SPANS 1 & 3		SPAN 2	
	INT.	EXT.	INT.	EXT.
NON COMPOSITE DEAD LOAD DEFLECTION (ΔNC) DUE TO SLAB AND COPING	⅞"	¾"	1⅜"	1 3/16"
COMPOSITE DEAD LOAD DEFLECTION (ΔC) DUE TO WEIGHT OF BARRIERS	⅛"	⅛"	3/16"	¼"

ANTICIPATED DEAD LOAD DEFLECTIONS

NOTES:

1. MAINTAIN 2" CLEARANCE TO ALL REINFORCEMENT, UNLESS NOTED.
2. ALL EXISTING STEEL BEAMS AND DIAPHRAGMS TO REMAIN.
3. DIMENSION "D" IS MEASURED FROM TOP OF SLAB TO TOP OF BEAMS AT CENTERLINE BEARING. SOME ADJUSTMENTS MAY BE REQUIRED AT THE END BENTS TO MATCH THE NEW DECK WITH THE APPROACH SLABS. VARY "D" BETWEEN BEARINGS TO COMPENSATE FOR ANTICIPATED DEAD LOAD DEFLECTION. MAINTAIN A MINIMUM SLAB THICKNESS OF 7" REGARDLESS OF ACTUAL BRIDGE ELEVATION AND PROFILE. "D" = 7½"
4. ANY DAMAGED SHEAR STUDS SHALL BE REMOVED, GROUND FLUSH, AND REPLACED.

R INDICATES RADIAL DIMENSION

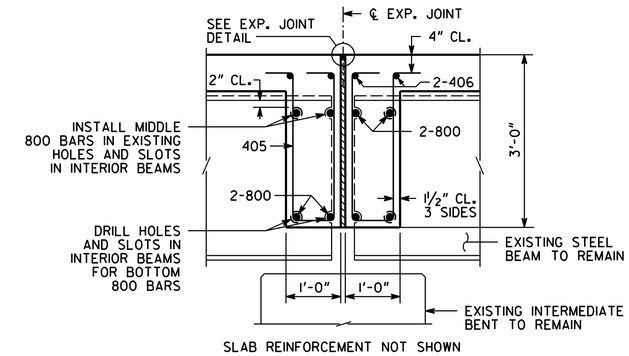

SECTION THRU EDGE BEAM

BEARING ASSEMBLY NOT SHOWN

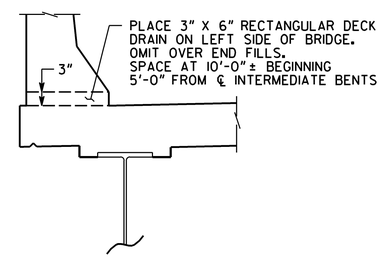

DECK DRAIN DETAIL

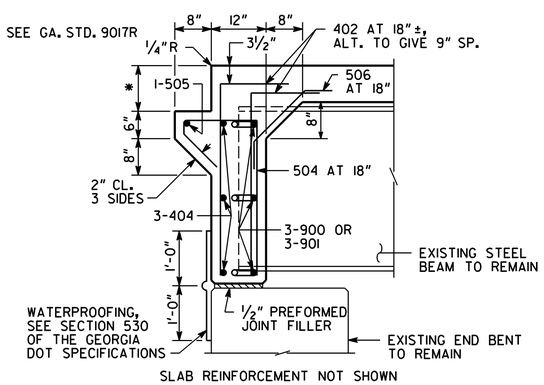

SECTION AT ENDWALL

BEARING ASSEMBLY NOT SHOWN

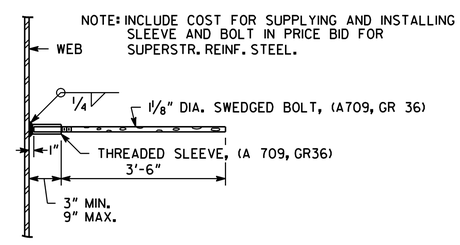

EDGE BEAM BAR LAP DETAIL

TYP. AT EXTERIOR BEAMS

BRIDGE NO. 3

URS CORPORATION
400 NORTHPARK TOWN CENTER
1000 ABERNATHY ROAD, N. E.
SUITE 900
ATLANTA, GA 30328
TEL: (678) 808-8800
FAX: (678) 808-8400

GEORGIA
DEPARTMENT OF TRANSPORTATION
ENGINEERING DIVISION-OFFICE OF BRIDGES AND STRUCTURES

DECK SECTION
BRIDGE REHAB ON
SR 246 OVER LITTLE TENNESSEE RIVER
RABUN COUNTY M004206

SCALE: ⅜" = 1'-0" MARCH 2011

DRAWING NO. 35-18
BRIDGE SHEET 4 OF 7

REVISIONS | DATE | BY

DESIGNED CAV | CHECKED RSC | REVIEWED CBB
DRAWN CAV | DESIGN GROUP BMU | APPROVED MLC

1 INCH WHEN PRINTED FULL SIZE

X.DGN

P:\1528\0902_BRMaint_TO*5\WORKING FILES\BRIDGE\FINAL\DGN\0902-BR104-DS.dgn 3/14/2011 8:54:01 AM george_manning