# PAVEMENT DRAINAGE DETAIL

USE ON CONSTRUCTION

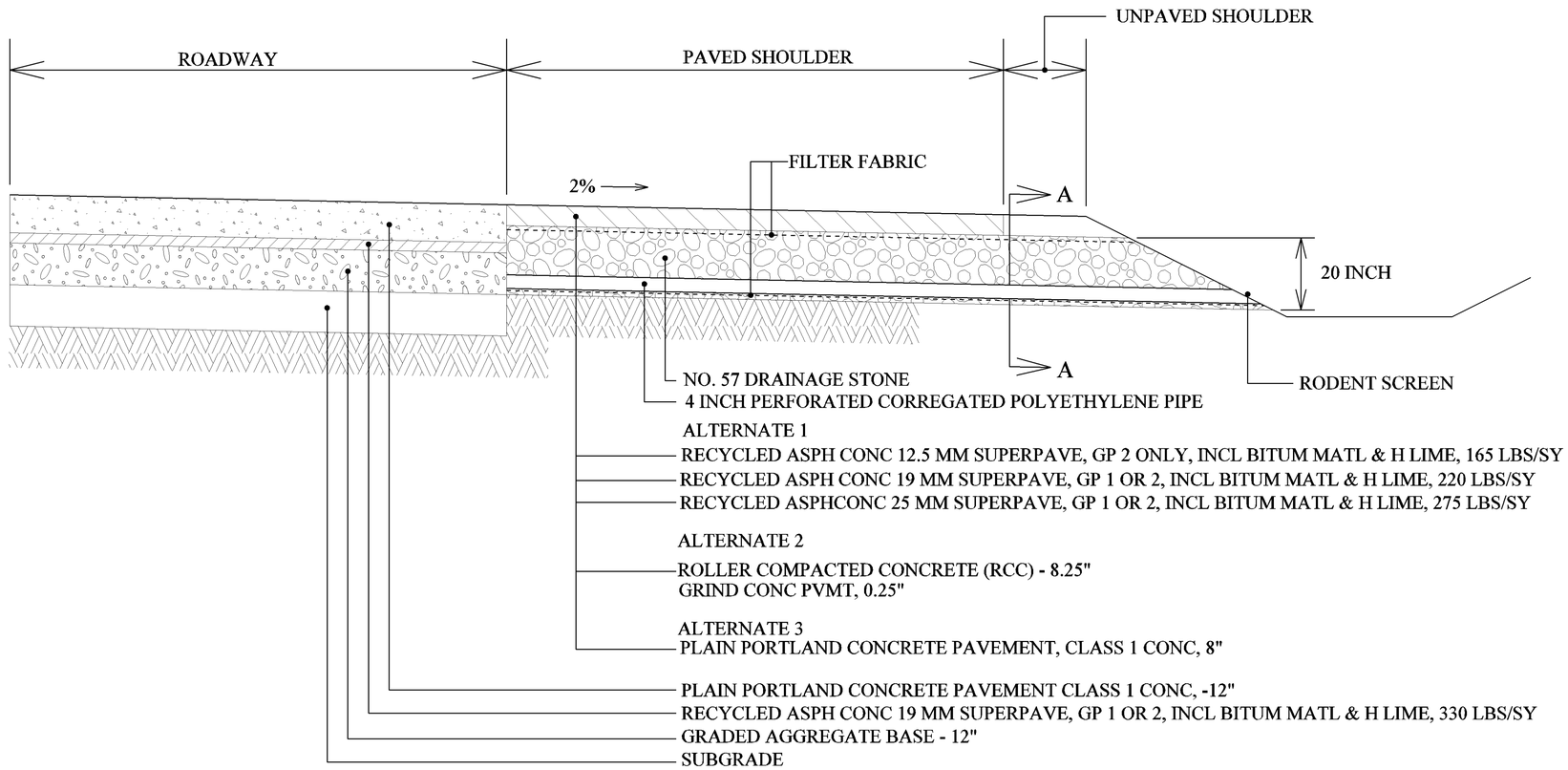


## NOTES:

1. DRAINS SHALL BE APPROXIMATELY 10 FEET WIDE.
2. DRAINS SHALL BE INSTALLED AT THE LOW POINT OF EACH SAG VERTICAL, LEFT AND RIGHT SIDES.
3. DRAINS SHALL EXTEND TO THE DITCHLINE OR FILL SLOPE.
4. FILTER FABRIC SHALL BE PLACED ON BOTTOM, SIDES AND TOP OF TRENCH AS SHOWN.
5. NO SEPERATE PAYMENT WILL BE MADE FOR THE DRAINAGE AGGREGATE OR FILTER FABRIC.

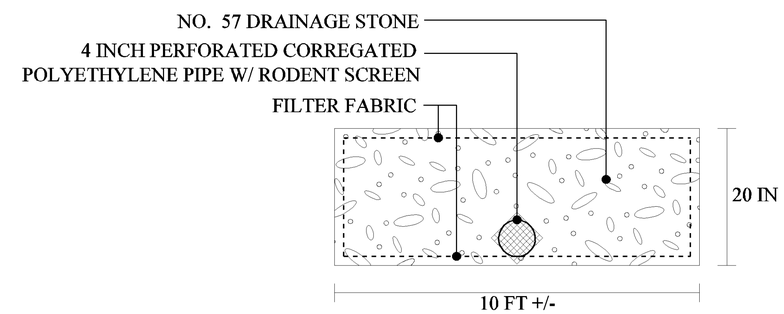


SECTION A-A NOT TO SCALE

GEORGIA
DEPARTMENT OF TRANSPORTATION

| REVISION DATES | | |
|---|---|---|
| 09-27-2010 | | |

STATE OF GEORGIA
DEPARTMENT OF TRANSPORTATION
OFFICE: ROADWAY DESIGN
TYPICAL SECTIONS

DRAWING No. 5-04

3/1/2007 GPLN