STATE	PROJECT NUMBER	SHEET NO.	TOTAL SHEETS
GA.	M004185	46	77

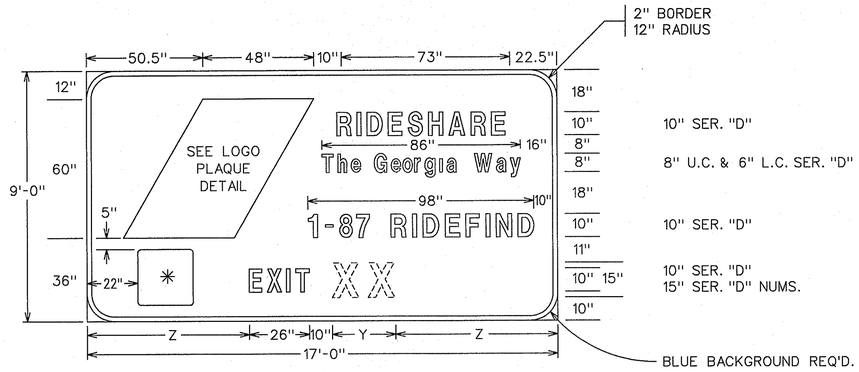

Y DETERMINED BY USING TAKEOUTS PROGRAM
Z (168"-Y)/2

*STANDARD SIZE BUS LOGO PLAQUE (SEE PAGE 3-73 IN THE STANDARD HIGHWAY SIGNS BOOK) TO BE USED ON SIGNS FOR MARTA RIDESHARE LOTS, EXCEPT THAT PLAQUE SHALL HAVE STANDARD INTERSTATE BLUE REFLECTORIZED BACKGROUND WITH WHITE REFLECTORIZED SYMBOL.

SPECIAL ROADSIDE AND OVERHEAD SIGN DETAIL

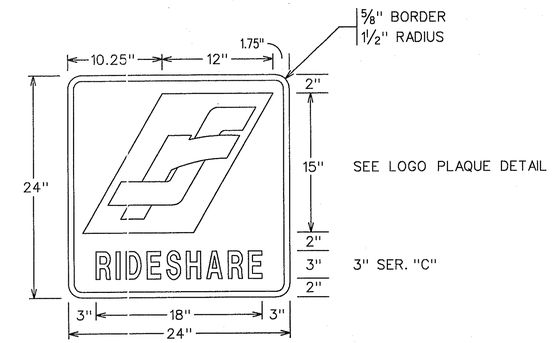

NOTES:
1. SIGN SHALL HAVE STANDARD INTERSTATE BLUE REFLECTORIZED BACKGROUND WITH WHITE REFLECTORIZED BORDER AND LEGEND.
2. THE APPROPRIATE MB6 SIGN SHALL BE MOUNTED ON THE SAME POST BELOW THIS SIGN.

STANDARD (FLAT SHEET ALUMINUM) SIGN DETAIL

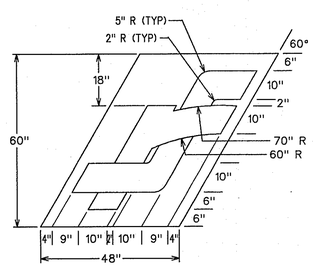

LOGO PLAQUE DETAIL

COLORS
LETTER R - RED (REFL)
LETTER S - BLACK (NON-REFL)
BACKGROUND - WHITE (REFL)

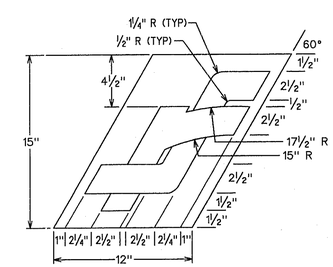

LOGO PLAQUE DETAIL

COLORS
LETTER R - RED (REFL)
LETTER S - BLACK (NON-REFL)
BACKGROUND - WHITE (REFL)

DATE	REVISIONS

GEORGIA DEPARTMENT OF TRANSPORTATION
OFFICE OF TRAFFIC SAFETY & DESIGN

DETAILS OF
RIDESHARE SIGNS

NO SCALE NOVEMBER 1999

PCBDTB