STATE	P.I. NUMBER	SHEET NO.	TOTAL SHEETS
GA.	M004161	11	18

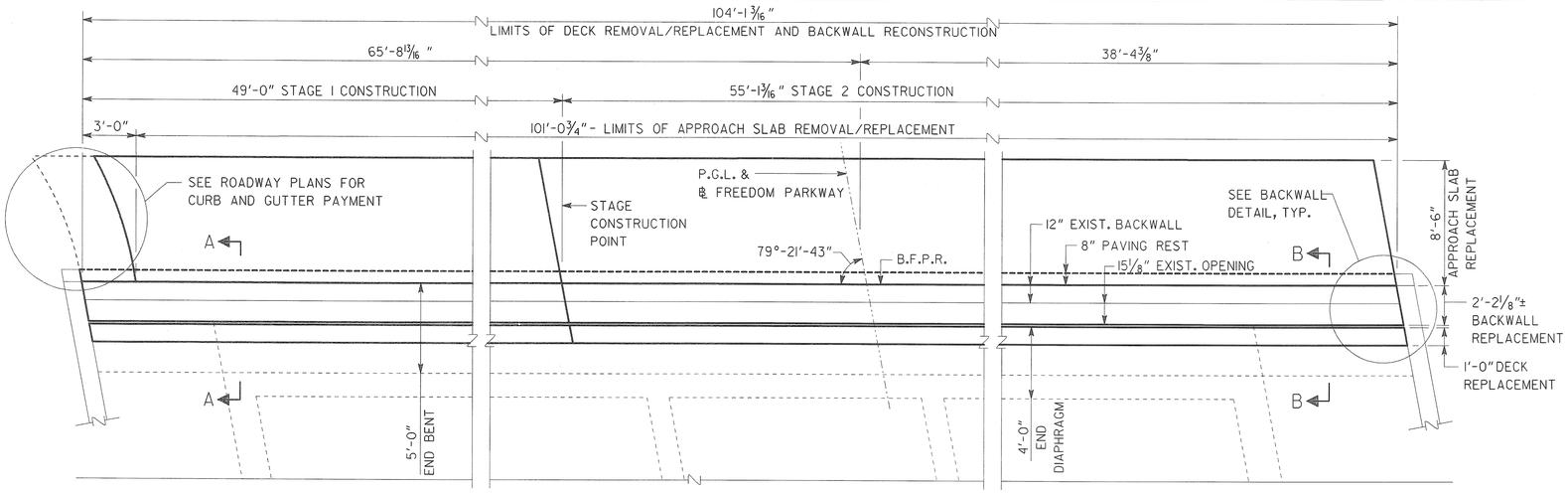

PLAN

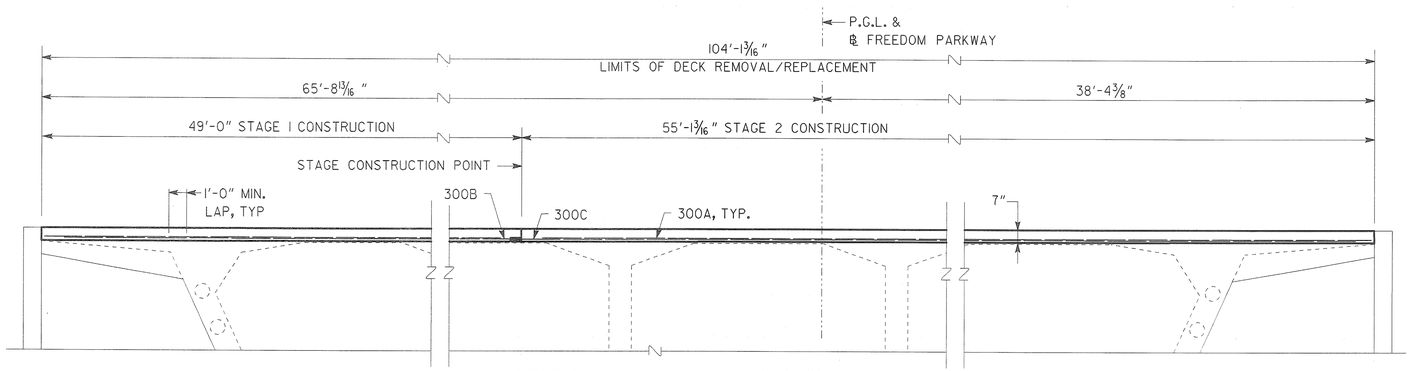

SECTION THRU END DIAPHRAGM
LOOKING AHEAD

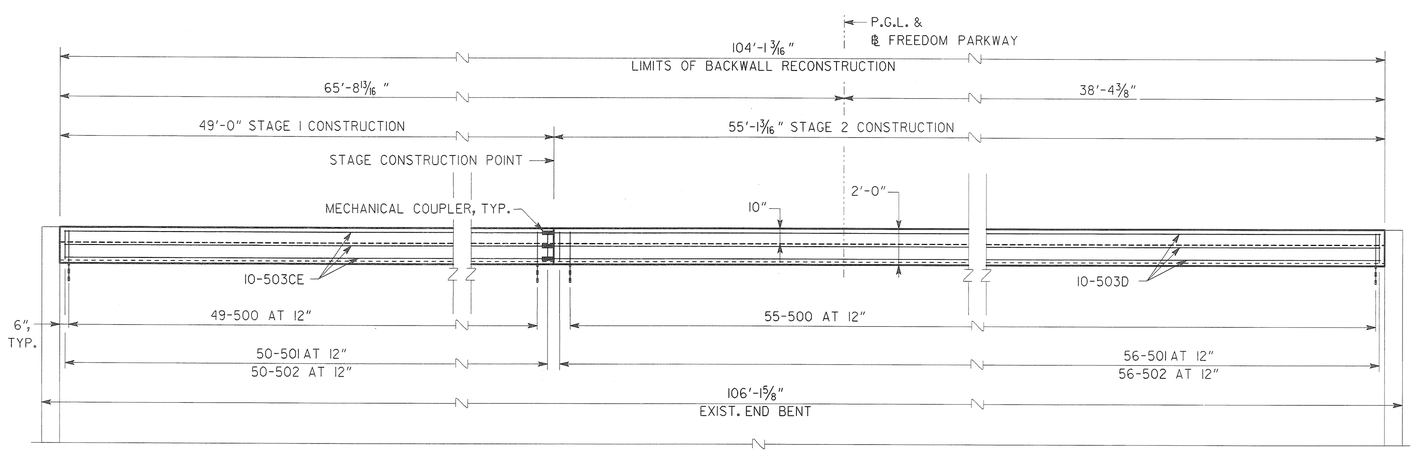

SECTION THRU BACKWALL
LOOKING AHEAD

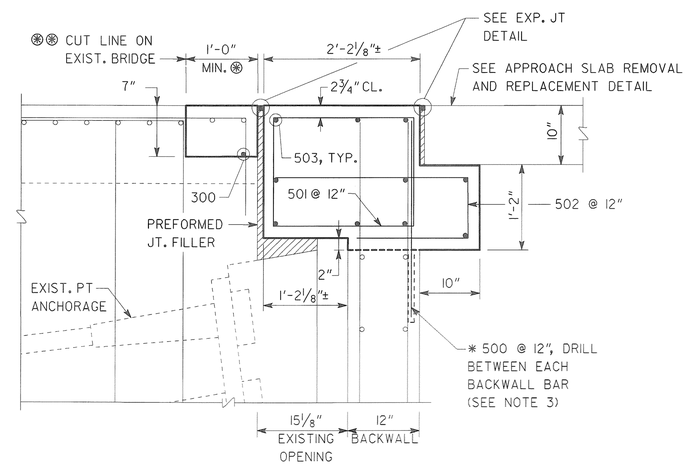

SECTION A-A

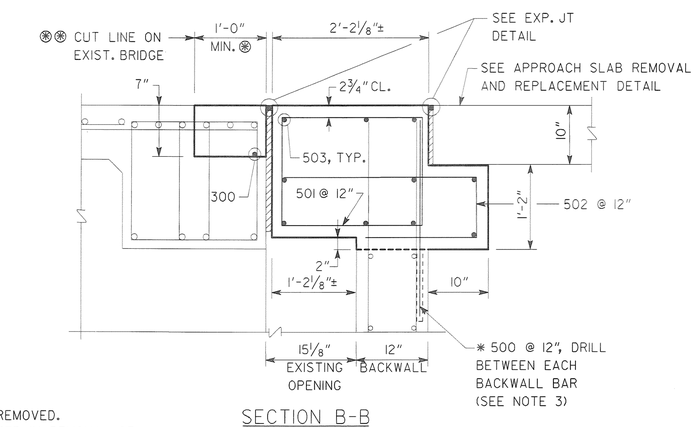

SECTION B-B

NOTES:

1. ⊛ PORTION OF DECK TO BE REMOVED.
2. ⊛⊛ CARE SHALL BE EXERCISED IN REMOVAL OF EXISTING CONCRETE. RETAIN EXISTING REINFORCEMENT. ANY EXISTING REINFORCEMENT STEEL DAMAGED DURING REMOVAL SHALL BE REPLACED BY THE CONTRACTOR AT NO ADDITIONAL COST TO THE DEPARTMENT.
3. * BARS SHALL BE ANCHORED WITH TYPE VII EPOXY ADHESIVE (12" MIN. EMBED.). COST FOR FURNISHING AND INSTALLING EPOXY ADHESIVE SHALL BE INCLUDED IN THE PRICE BID FOR PAY ITEM 514-1000.
4. SEE MISCELLANEOUS DETAILS SHEET 6 FOR DETAIL OF ARMORED JOINT REMOVAL.
5. EXISTING DECK AND BACKWALL REINFORCEMENT TO REMAIN UNLESS NOTED IN THE PLANS.
6. MAINTAIN 2" CL. TO ALL REINFORCEMENT UNLESS OTHERWISE NOTED.
7. CU YD TWENTY-FOUR HOUR ACCELERATED STRENGTH CONC QUANTITY INCLUDES APPROACH SLAB AND FLOWABLE FILL QUANITITY.

NOTE: INFORMATION TAKEN FROM ORIGINAL PLANS.

QUANTITIES

ITEM	BENT 4
CU YD TWENTY-FOUR HOUR ACCELERATED STRENGTH CONC	65.4
LUMP - EPOXY COATED SUPERSTR REINF STEEL, LB	2834

EXISTING BRIDGE SERIAL NO. 121-0719-0
EXISTING BRIDGE I.D. NO. 121-00010R-000.03E
PROJECT P.I. NO. M004161
BRIDGE NO. 1

Heath & Lineback Engineers
INCORPORATED
2390 CANTON ROAD, BUILDING 200
MARIETTA, GEORGIA 30066-5393

STATE OF GEORGIA
DEPARTMENT OF TRANSPORTATION
ENGINEERING DIVISION - OFFICE OF BRIDGE DESIGN

END BENT 4 EXPANSION JOINT DETAILS
FREEDOM PARKWAY
OVER I-75 / I-85

FULTON COUNTY — P.I. NO. M004161

NO SCALE — JUNE 2010

DRAWING NO.	BRIDGE SHEET
35 - 05	5 OF 6

REVISIONS	BY	DATE

DESIGNED	TBS	CHECKED	FRB/KAK	BMJ REVIEWED	CBB
DRAWN	TBS	REVIEWED	MS	APPROVED	MLC/PVL

JA\ 2007006.7 \ BRIDGE \ 121-0719-0 \ 121-0719-0_DET.DGN