STATE	PROJECT P.J. NUMBER	SHEET NO.	TOTAL SHEETS
GA.	M004124	41	68

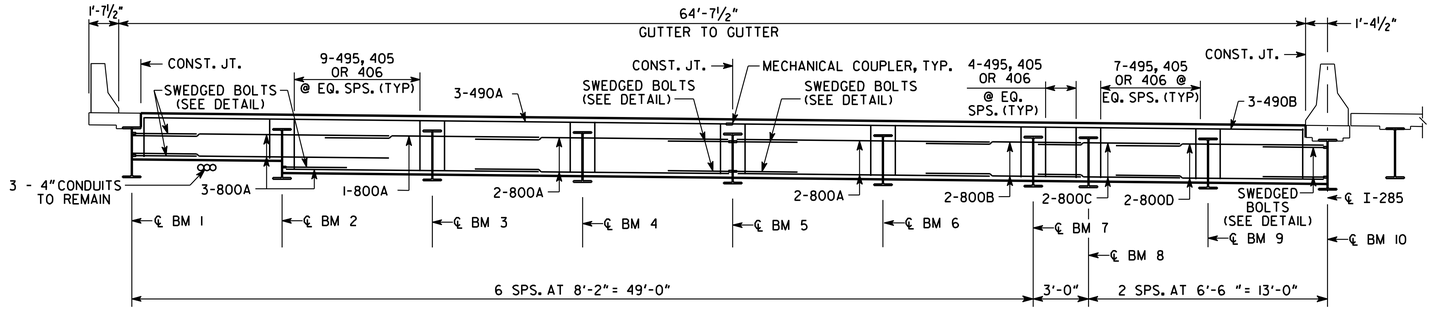

SECTION THRU EDGE BEAM

LEFT BRIDGE
(LOOKING AHEAD)

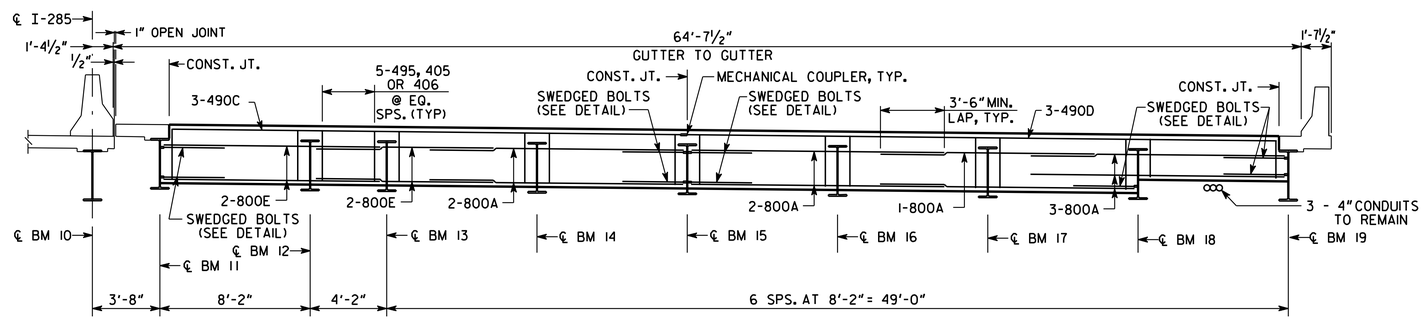

SECTION THRU EDGE BEAM

RIGHT BRIDGE
(LOOKING AHEAD)

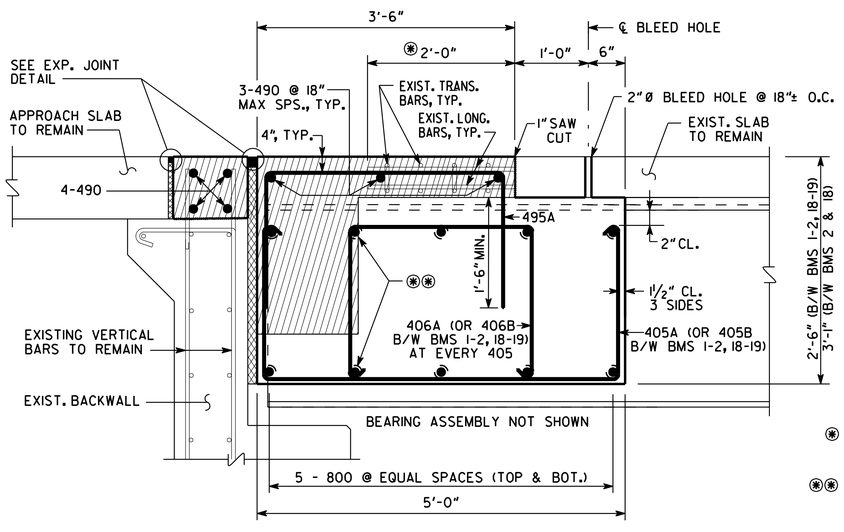

EDGE BEAM SECTION

(SPAN 1)

(*) LIMITS OF BOTH LONG. AND TRANS. BARS TO REMAIN.

(**) DRILL HOLES AND SLOTS IN INTERIOR BEAMS FOR 800 BARS.

DENOTES CONCRETE TO BE REMOVED

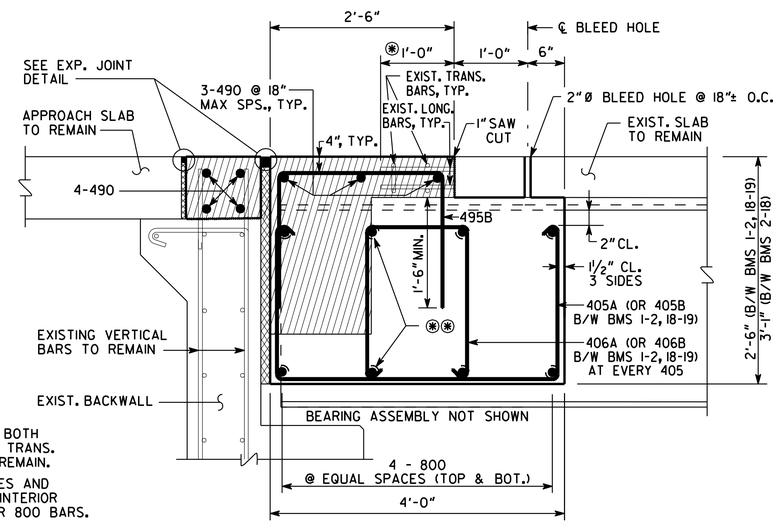

EDGE BEAM SECTION

(SPAN 3)

NOTE: ALL DIMENSIONS SHOWN ARE PERPENDICULAR TO BACKWALL.

NOTES:

1. CARE SHALL BE EXERCISED IN REMOVAL OF EXISTING CONCRETE TO MAKE CUTS VERTICAL AND TO RETAIN EXISTING REINFORCEMENT. ANY EXISTING REINFORCEMENT STEEL DAMAGED DURING REMOVAL SHALL BE REPLACED BY THE CONTRACTOR AT NO ADDITIONAL COST.
2. 405, 406 & 495 BARS SHALL BE PLACED PARALLEL TO BEAMS.
3. PROVIDE TEMPORARY SHORING OF OVERHANG PRIOR TO CONCRETE REMOVAL.
4. CARE SHALL BE EXERCISED TO PROTECT INNER THREAD OF MECHANICAL COUPLER FROM FILLING WITH CONCRETE DURING PHASE I CONCRETE POUR. COST OF MATERIALS FOR INSTALLATION OF COUPLER SHOULD BE INCLUDED IN THE PRICE BID FOR ITEM 511 "SUPERSTR REINF STEEL".

BRIDGE NO. 4

Hatch Mott MacDonald
2550 Heritage Ct, SE, Suite 250
Atlanta GA 30339-3062
(770) 952-1022

GEORGIA
DEPARTMENT OF TRANSPORTATION
ENGINEERING DIVISION-OFFICE OF BRIDGE DESIGN

DECK SECTION - SPAN 1 OR 3
UPLIFT REHABILITATION
I-285 OVER EVANS ROAD

DEKALB COUNTY — M004124

SCALE: NO SCALE — FEBRUARY 2011

DRAWING NO.	REVISIONS	BY	DATE
35-31			
BRIDGE SHEET 31 OF 49			

DESIGNED	PJC	CHECKED	SHG	REVIEWED	CBB
DRAWN	WBN	DESIGN GROUP	BMU	APPROVED	MLC