STATE	PROJECT P.I. NUMBER	SHEET NO.	TOTAL SHEETS
GA.	M004124	35	68

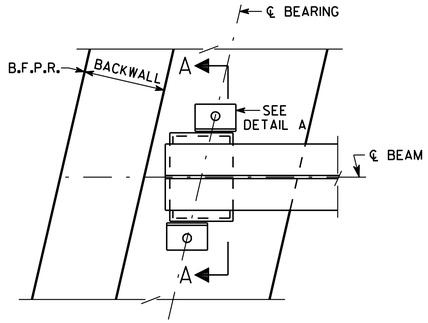

PLAN
BENT 1 SHOWN
BENT 4 SIMILAR

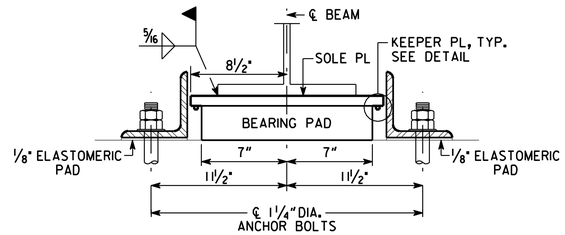

SECTION A-A

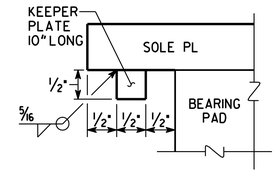

KEEPER PLATE DETAIL

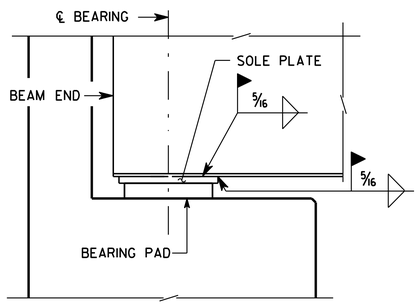

ELEVATION
BENT 1 SHOWN
BENT 4 SIMILAR

NOTE: ANGLE & ANCHOR BOLT NOT SHOWN FOR CLARITY

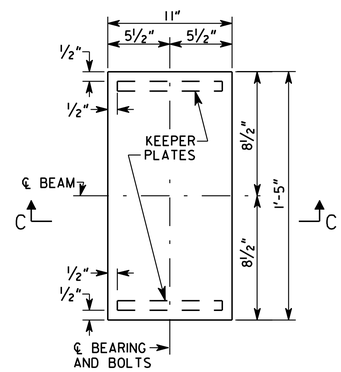

PLAN

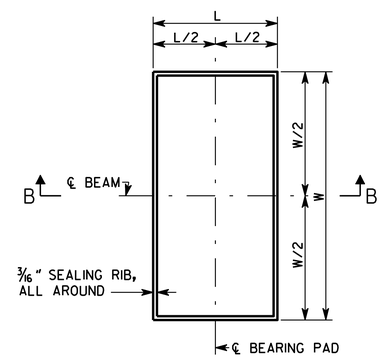

PLAN

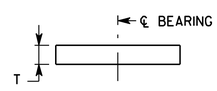

SECTION C-C
SOLE PLATE

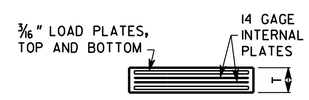

SECTION B-B
BEARING PAD

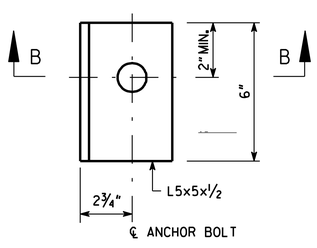

PLAN

DETAIL A

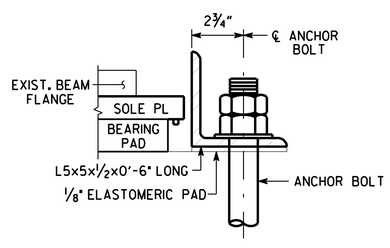

SECTION B-B

NOTES

1) BEARING PADS HAVE BEEN DESIGNED ACCORDING TO AASHTO SPECIFICATIONS DIVISION I, SECTION 14.6.6 AND SHALL BE FURNISHED IN ACCORDANCE WITH AASHTO SPECIFICATIONS DIVISION II, SECTION 18, BEARINGS.

2) BEARING PADS SHALL BE MADE OF 60 DUROMETER HARDNESS NEOPRENE, GRADE 2 OR HIGHER.

3) BEARING PADS SHALL HAVE 1/4" COVER ON THE TOP, BOTTOM, AND SIDES.

4) 3/16" LOAD PLATES AND 14 GAGE INTERNAL PLATE(S) (IF REQUIRED) SHALL BE ASTM A 709 GRADE 36 OR ASTM A 1011 GRADE 36.

5) NUMBER OF INTERNAL PLATES SHOWN FOR ILLUSTRATION PURPOSES ONLY. THE NUMBER OF INTERNAL PLATE(S) SPECIFIED SHALL BE EQUALLY SPACED BETWEEN LOAD PLATES.

6) USE OF 1 1/2° MOLD DRAFT IS OPTIONAL

7) BEARING PADS SHALL BE VULCANIZED TO SOLE PLATE.

8) ANCHOR BOLTS, ASR HEX NUTS AND PLATE WASHERS SHALL BE ASTM A276 TYPE 304 STAINLESS STEEL. PROVIDE 2 1/2" MIN. PROJECTION OF ANCHOR BOLT ABOVE THE ANGLE. SET ANCHOR BOLTS 12" INTO CAP.

9) CUT EXISTING ANCHOR BOLTS FLUSH WITH CONCRETE CAP SEAT.

10) LOCATE AND DRILL NEW ANCHOR BOLT HOLES TO AVOID EXISTING CAP REINFORCEMENT. USE AN IMPACT DRILL FOR DRILLING HOLES IN CONCRETE. FIELD DRILL HOLES IN ANGLES AS REQUIRED. SECURE ANCHOR BOLTS WITH TYPE VIII EPOXY RESIN ADHESIVE FROM THE GDOT QUALIFIED PRODUCTS LIST.

11) ANCHOR BOLT NUTS SHALL BE TIGHTENED COMPLETELY AND THEN BACKED OFF 1/8". SECURE NUTS IN PLACE BY EITHER DOUBLE NUTTING OR BY THE USE OF A THREAD LOCKING ADHESIVE.

12) REMOVE EXISTING SOLE PLATES. GRIND WELDS SMOOTH WITH BOTTOM FLANGE.

13) ALL NEW BEARING ASSEMBLY COMPONENTS SHALL BE ASTM A709 GR 36 STEEL UNLESS OTHERWISE NOTED AND SHALL BE CLEANED AND PAINTED WITH SYSTEM VII PAINT IN ACCORDANCE WITH SECTION 535 OF THE GEORGIA STANDARD SPECIFICATIONS.

13) COST OF FURNISHING AND INSTALLING PLATES, ANGLES, ANCHOR BOLTS, ELASTOMERIC PADS, AND ANY OTHER MATERIALS NECESSARY TO COMPLETE THE WORK SHALL BE INCLUDED IN THE PRICE BID FOR ITEM 501 "STR STEEL."

BENT	BEARING PADS							
	W (IN)	L (IN)	T (IN)	NUMBER OF INTERNAL PLATE(S)	DESIGN SHEAR DEFLECTION (IN)	DESIGN LOADS (KIPS)		
						DEAD LOAD	LIVE LOAD (NO IMPACT)	DEAD LOAD + LIVE LOAD
1 & 4	14	10	2 7/8	3	5/8	24.9	66.7	91.6

SOLE PLATE THICKNESS, T (IN.)

	LEFT BRIDGE													RIGHT BRIDGE												
BEAM	1	2	3	4	5	6	7	8	9	10	11	12	13	14	15	16	17	18	19	20	21	22	23	24	25	26
BENT 1	2	1 1/2	1 7/8	1 7/8	1 1/2	1 1/2	1 1/2	1 5/8	1 5/8	1 5/8	1 5/8	1 5/8	1 3/8	1 5/8	1 5/8	1 5/8	1 3/8	1 3/8	1 1/4	1 3/8	1 3/8	1 3/8	1 1/2	1 3/8	1 3/4	1 5/8
BENT 4	1 3/4	1 3/8	1 1/2	1 1/4	1 1/4	5/8	3/4	1 1/8	1	1 1/8	1 1/8	1 3/8	1 1/8	2 3/8	3 1/8	1 5/8	1 5/8	1 3/8	1 1/4	1 1/4	1 1/4	1 5/8	1 1/4	1 7/8	1 5/8	1 7/8

BRIDGE NO. 3

Hatch Mott MacDonald
2550 Heritage Ct, SE, Suite 250
Atlanta GA 30339-3062
(770) 952-1022

GEORGIA
DEPARTMENT OF TRANSPORTATION
ENGINEERING DIVISION-OFFICE OF BRIDGE DESIGN

ELASTOMERIC BEARING PAD DETAILS
UPLIFT REHABILIATION
I-285 OVER HENDERSON MILL ROAD

DEKALB COUNTY — M004124

SCALE: NO SCALE — FEBRUARY 2011

DRAWING NO. 35-25
BRIDGE SHEET 25 OF 49

REVISIONS — DATE — BY

DESIGNED PJC — CHECKED SHG — REVIEWED WEI
DRAWN WBN — DESIGN GROUP EJC — APPROVED PVL